Go to SUP13

SECTION BR
BRAKE SYSTEM

CONTENTS

ABS (3 SENSOR)

SERVICE INFORMATION 2

MODIFICATION NOTICE 2
Major Modification Item 2

TROUBLE DIAGNOSIS 3
Wiring Diagram 3

C1102, C1103, C1104 WHEEL SENSOR 11
DTC Logic 11
Diagnosis Procedure 11

C1106, C1107, C1108 WHEEL SENSOR 13
DTC Logic 13
Diagnosis Procedure 13

C1115 WHEEL SENSOR 15
DTC Logic 15
Diagnosis Procedure 15

ABS (4 SENSOR)

SERVICE INFORMATION 17

MODIFICATION NOTICE 17
Major Modification Item 17

TROUBLE DIAGNOSIS 18
Wiring Diagram 18

SERVICE INFORMATION

MODIFICATION NOTICE

Major Modification Item

INFOID:0000000007659939

- Wiring diagram has been changed.
- Diagnosis procedure has been changed.

TROUBLE DIAGNOSIS

Wiring Diagram

INFOID:0000000007659942

LHD

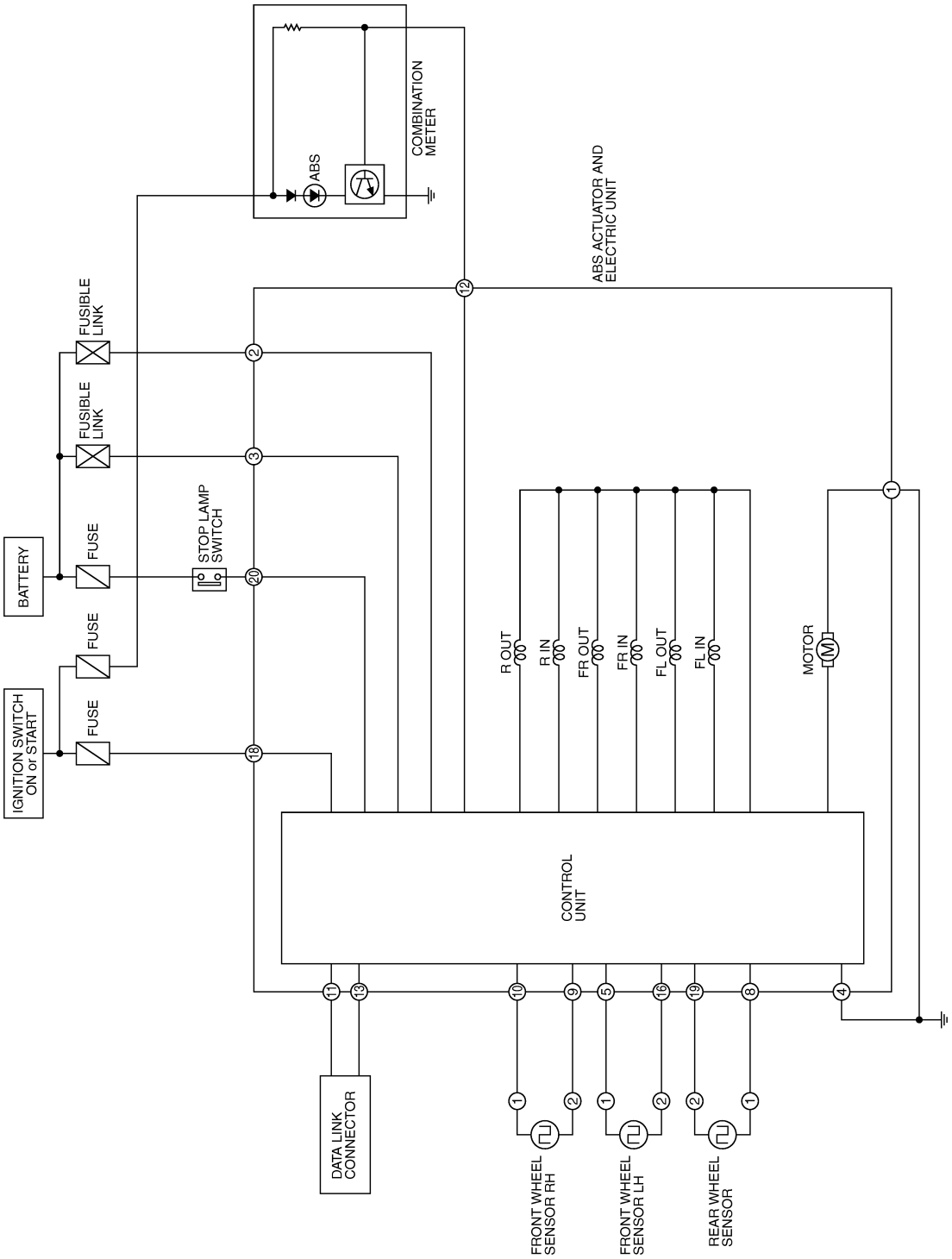

JMFWA0188GB

BR-ABS-01

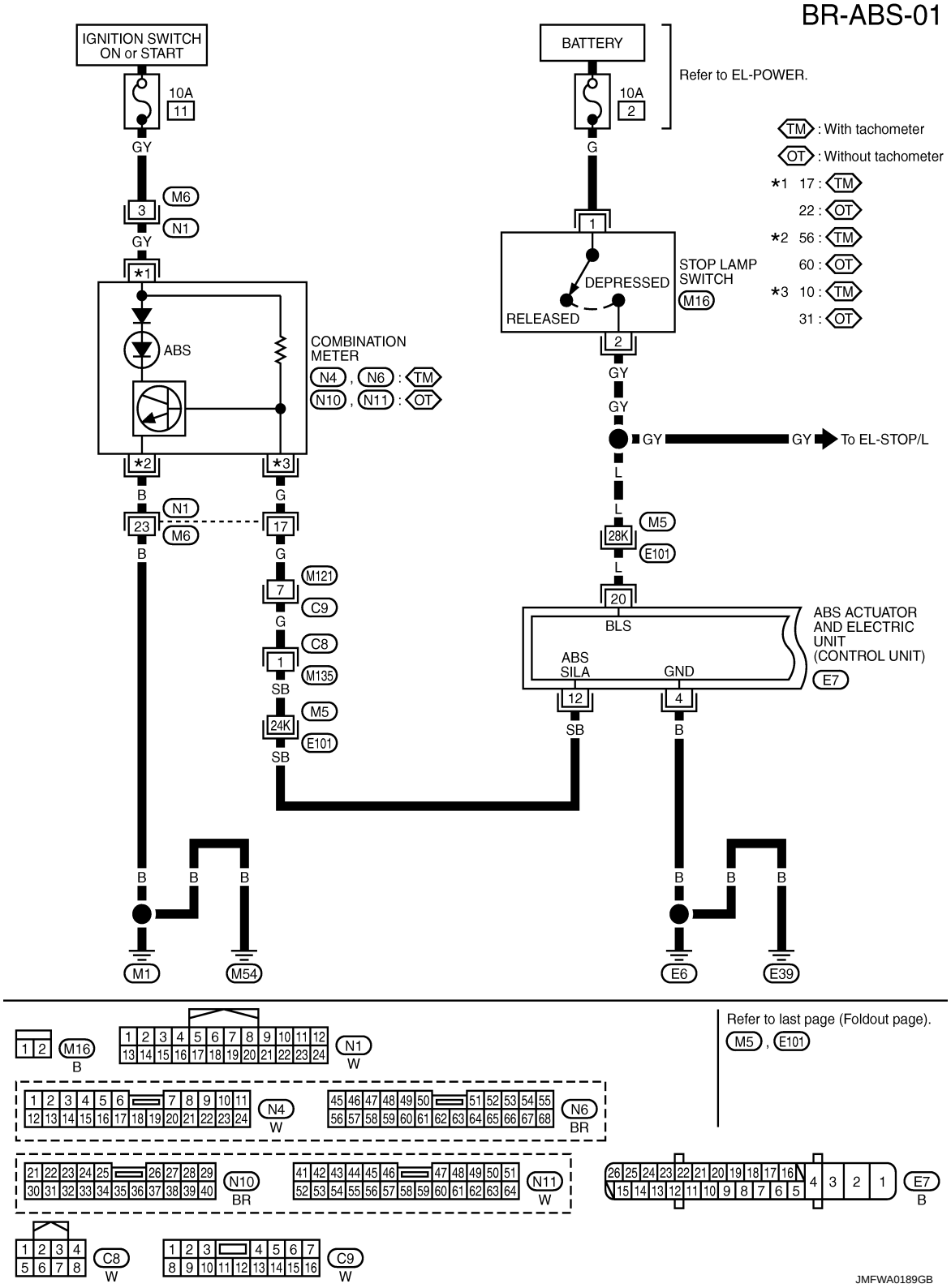
IGNITION SWITCH ON or START
10A
11
GY
M6
3
N1
GY
*1
ABS
COMBINATION METER
N4 , N6 : TM
N10 , N11 : OT
*2
*3
B
G
N1
23
M6
17
B
G
M121
7
C9
G
C8
1
M135
SB
M5
24K
E101
SB
BATTERY
10A
2
Refer to EL-POWER.
G
1
DEPRESSED
RELEASED
STOP LAMP SWITCH
M16
2
GY
GY
GY
GY
To EL-STOP/L
L
L
M5
28K
E101
L
20
BLS
ABS SILA
GND
ABS ACTUATOR AND ELECTRIC UNIT (CONTROL UNIT)
E7
12
4
SB
B
TM : With tachometer
OT : Without tachometer
*1 17 : TM
22 : OT
*2 56 : TM
60 : OT
*3 10 : TM
31 : OT
B B B
B B B
M1
M54
E6
E39
M16
B
N1
W
N4
W
N6
BR
N10
BR
N11
W
E7
B
C8
W
C9
W
Refer to last page (Foldout page).
M5 , E101
JMFWA0189GB

BR-ABS-02

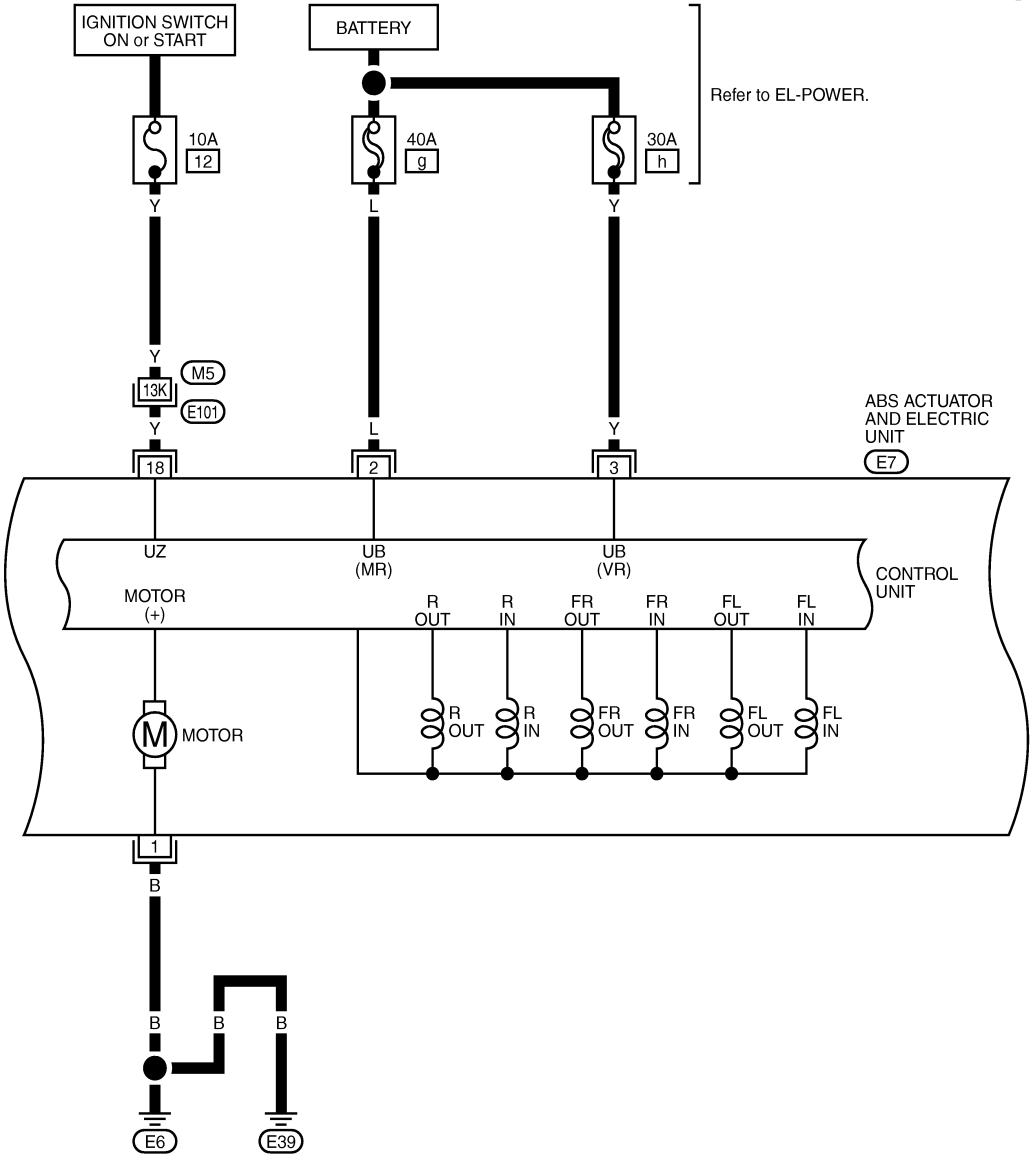

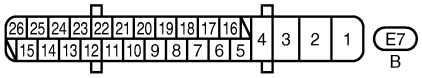

Refer to last page (Foldout page).
M5 , E101

JMFWA0190GB

BR-ABS-03

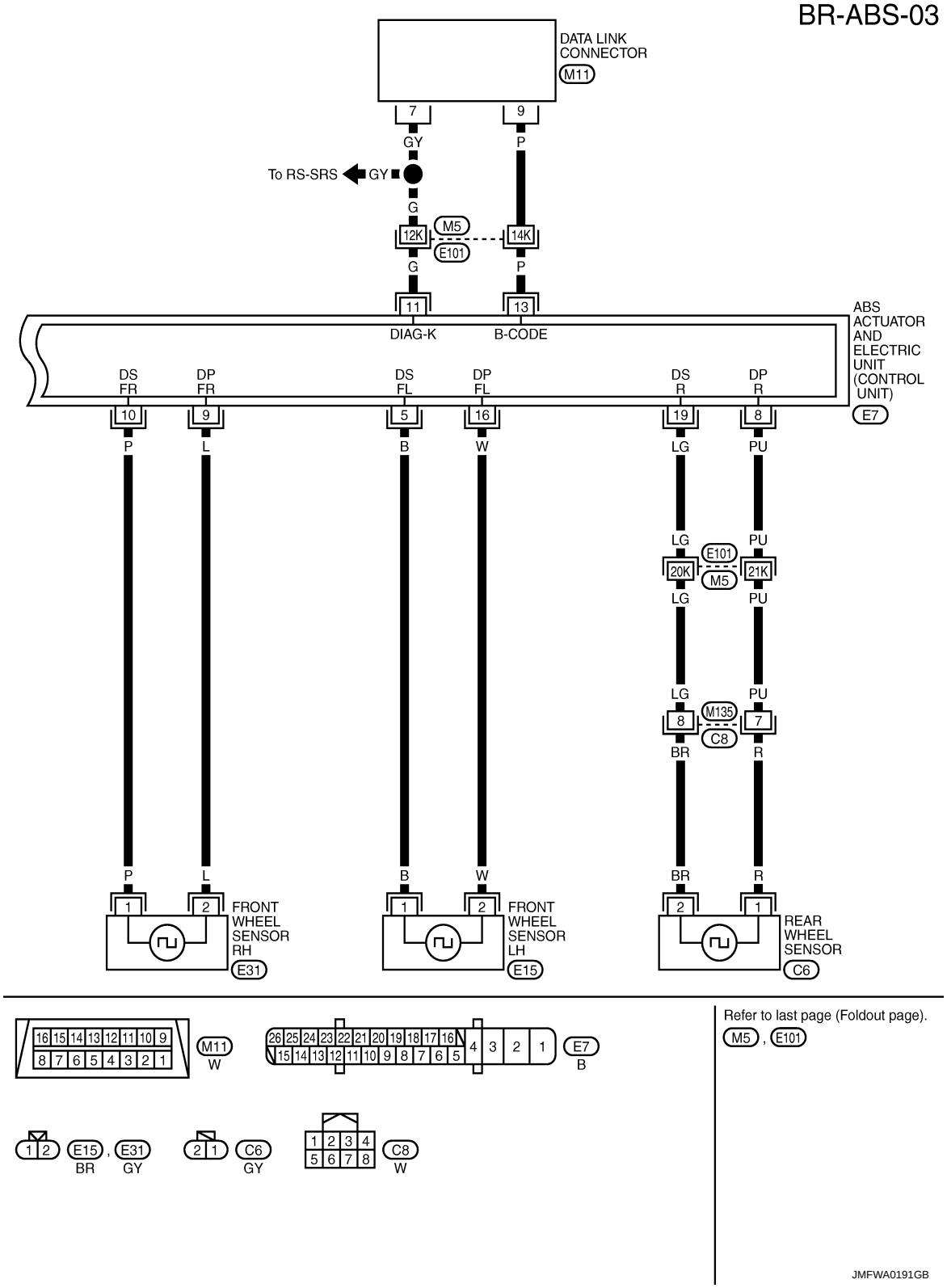
DATA LINK CONNECTOR
M11
7
9
GY
P
To RS-SRS
GY
G
M5
12K
14K
E101
G
P
11
13
DIAG-K
B-CODE
ABS ACTUATOR AND ELECTRIC UNIT (CONTROL UNIT)
E7
DS FR
DP FR
DS FL
DP FL
DS R
DP R
10
9
5
16
19
8
P
L
B
W
LG
PU
LG
PU
E101
20K
21K
M5
LG
PU
LG
PU
M135
8
7
C8
BR
R
P
L
B
W
BR
R
1
2
FRONT WHEEL SENSOR RH
E31
1
2
FRONT WHEEL SENSOR LH
E15
2
1
REAR WHEEL SENSOR
C6
M11
W
E7
B
E15
BR
E31
GY
C6
GY
C8
W
Refer to last page (Foldout page).
M5 , E101
JMFWA0191GB

RHD

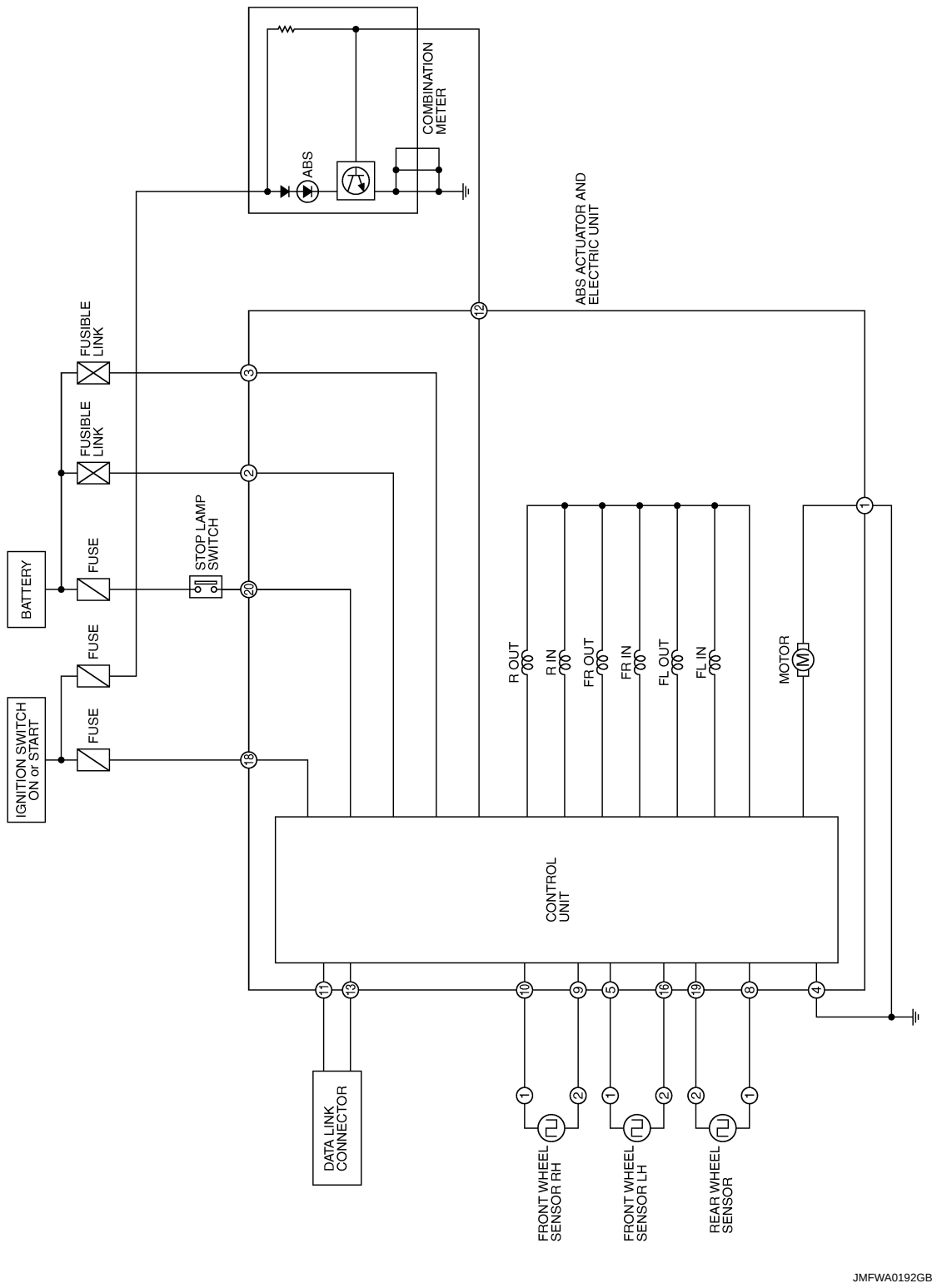
COMBINATION METER
ABS
ABS ACTUATOR AND ELECTRIC UNIT
FUSIBLE LINK
FUSIBLE LINK
FUSE
FUSE
FUSE
BATTERY
IGNITION SWITCH ON or START
STOP LAMP SWITCH
R OUT
R IN
FR OUT
FR IN
FL OUT
FL IN
MOTOR
CONTROL UNIT
DATA LINK CONNECTOR
FRONT WHEEL SENSOR RH
FRONT WHEEL SENSOR LH
REAR WHEEL SENSOR
JMFWA0192GB

BR-ABS-04

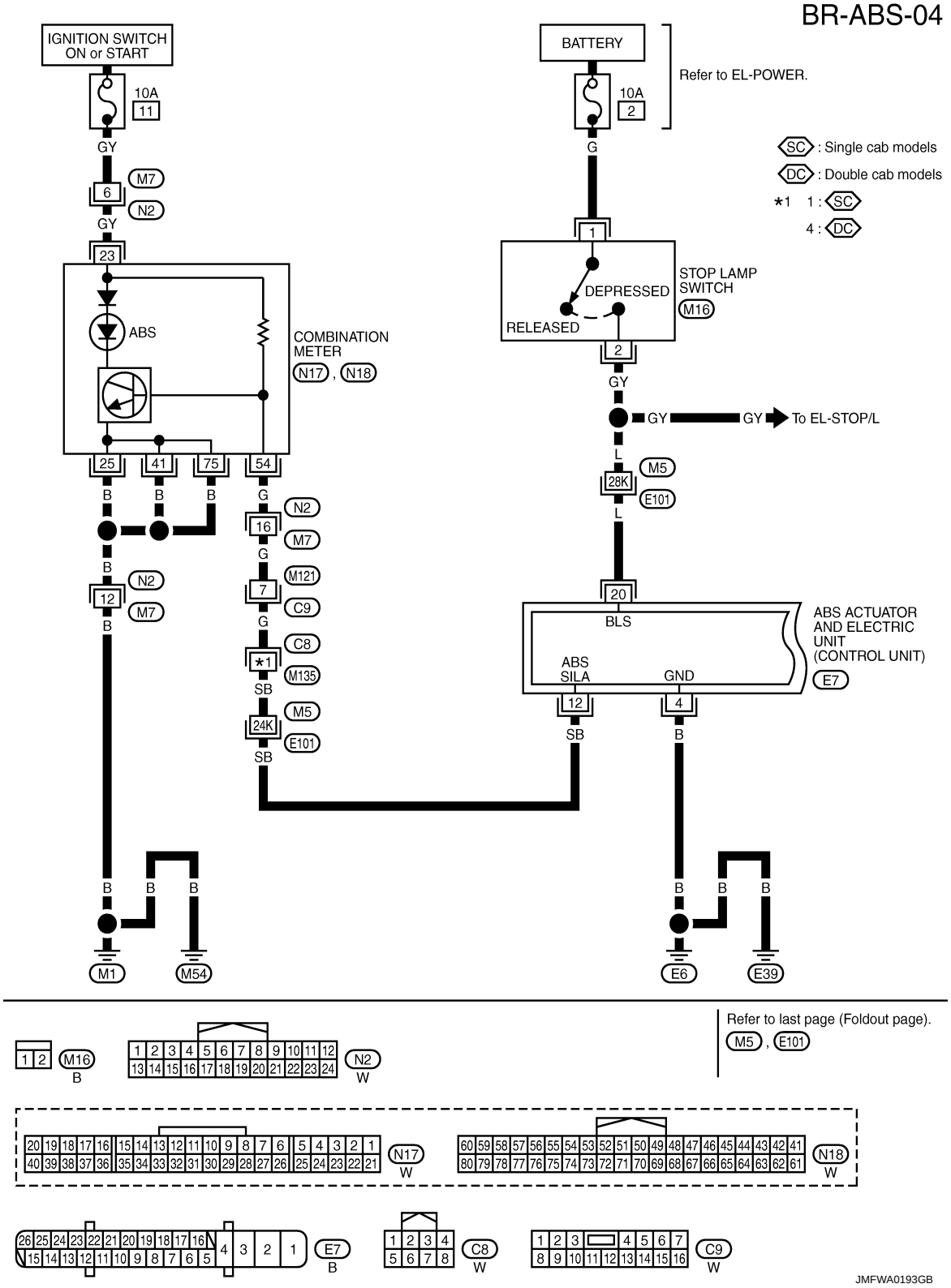
IGNITION SWITCH ON or START
10A
11
GY
M7
6
N2
GY
23
ABS
COMBINATION METER
N17 , N18
25
41
75
54
B
B
B
G
N2
16
M7
G
M121
7
C9
G
C8
*1
M135
SB
M5
24K
E101
SB
B
N2
12
M7
B
B
B
B
M1
M54
BATTERY
10A
2
Refer to EL-POWER.
G
SC : Single cab models
DC : Double cab models
*1 1 : SC
4 : DC
1
STOP LAMP SWITCH
DEPRESSED
RELEASED
M16
2
GY
GY
GY
To EL-STOP/L
L
M5
28K
E101
L
20
BLS
ABS ACTUATOR AND ELECTRIC UNIT (CONTROL UNIT)
ABS SILA
GND
E7
12
4
SB
B
B
B
B
B
B
E6
E39
Refer to last page (Foldout page).
M5 , E101
M16
B
N2
W
N17
W
N18
W
E7
B
C8
W
C9
W
JMFWA0193GB

BR-ABS-05

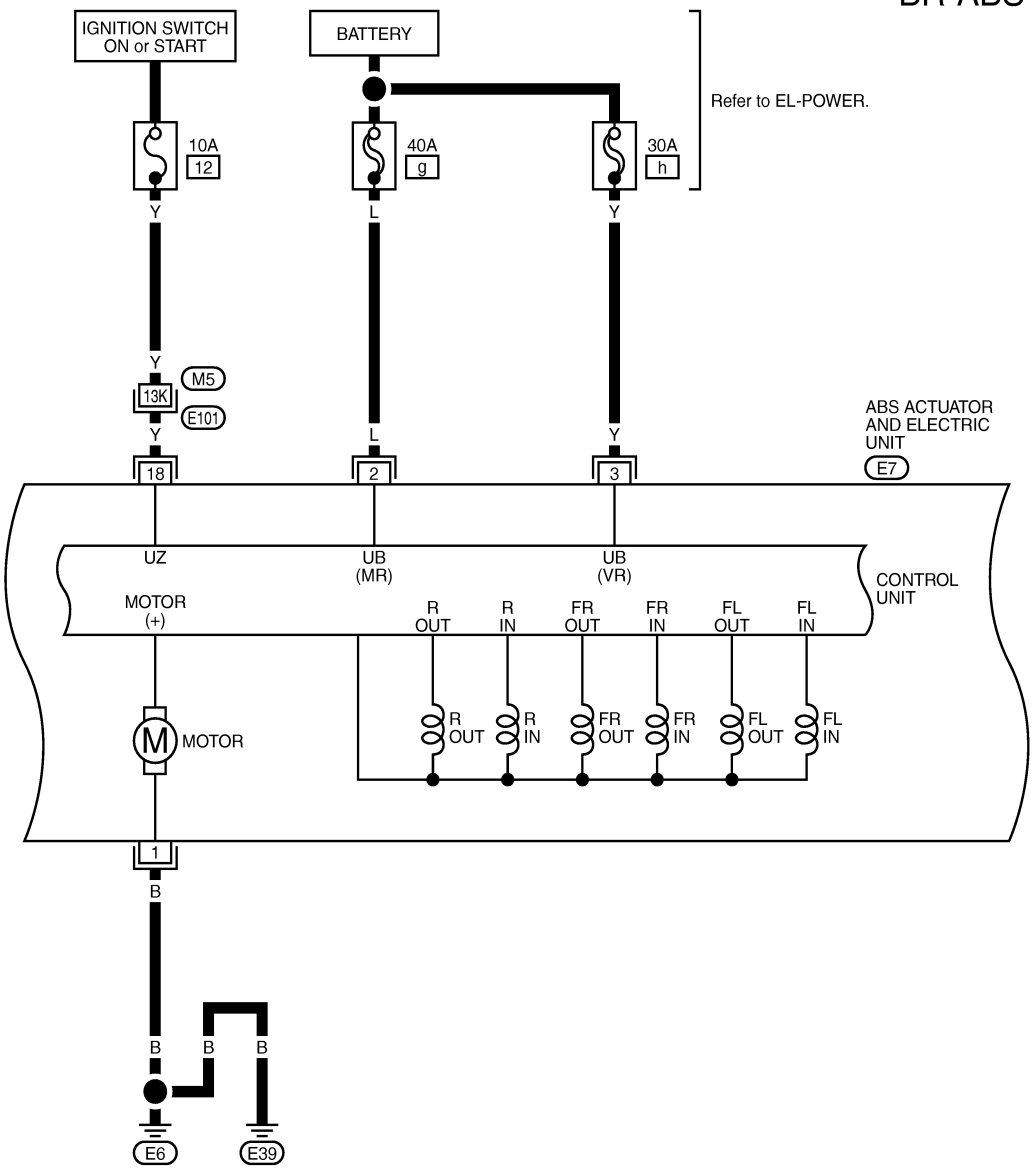

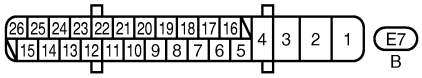

Refer to last page (Foldout page).
M5 , E101

JMFWA0194GB

BR-ABS-06

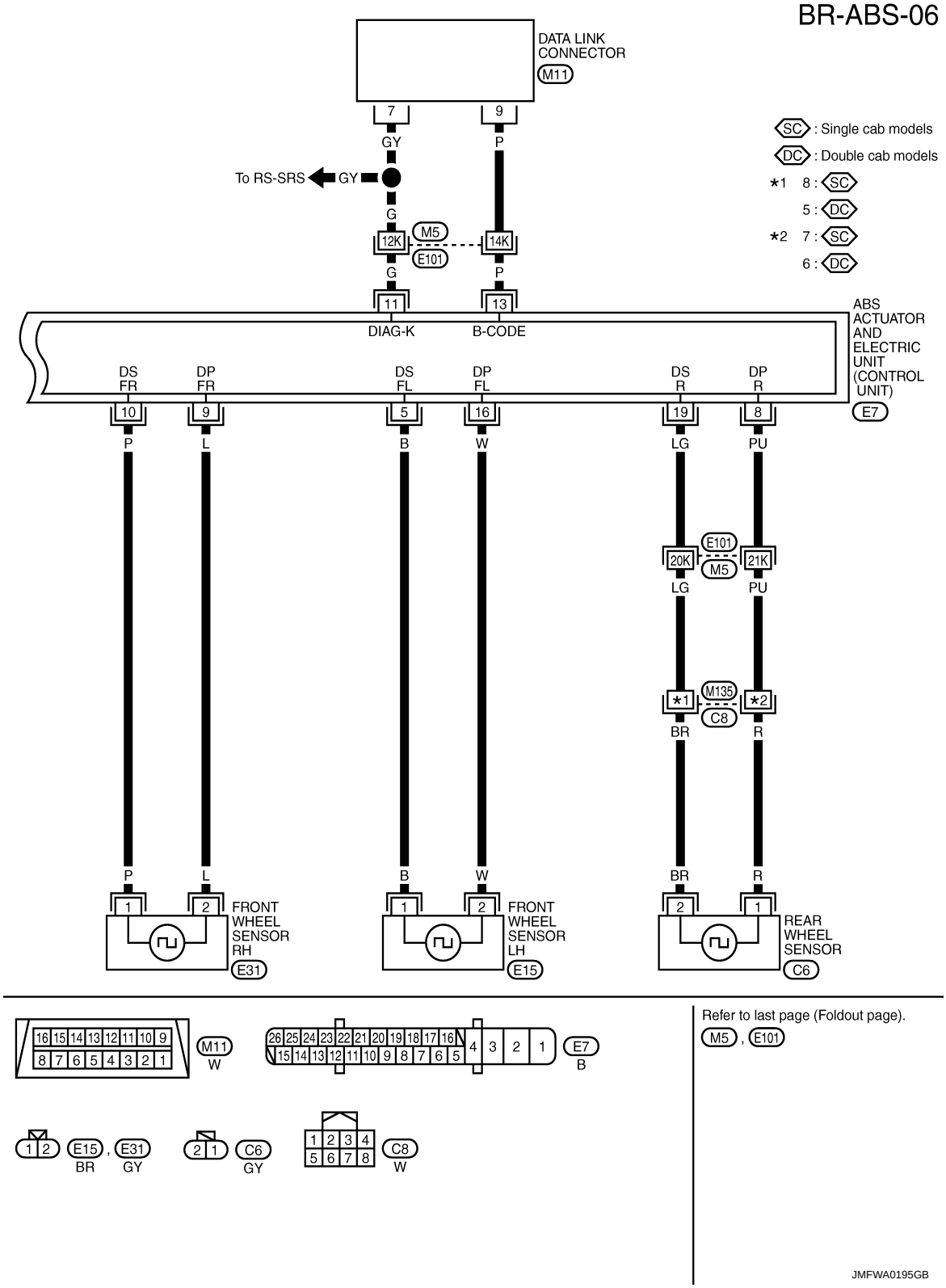
DATA LINK CONNECTOR
M11
7
9
GY
P
To RS-SRS
GY
G
12K
M5
E101
14K
G
P
11
13
DIAG-K
B-CODE
ABS ACTUATOR AND ELECTRIC UNIT (CONTROL UNIT)
E7
DS FR
DP FR
DS FL
DP FL
DS R
DP R
10
9
5
16
19
8
P
L
B
W
LG
PU
E101
20K
M5
21K
LG
PU
M135
*1
C8
*2
BR
R
P
L
B
W
BR
R
1
2
FRONT WHEEL SENSOR RH
E31
1
2
FRONT WHEEL SENSOR LH
E15
2
1
REAR WHEEL SENSOR
C6
SC : Single cab models
DC : Double cab models
*1 8 : SC
5 : DC
*2 7 : SC
6 : DC
M11
W
E7
B
E15
BR
E31
GY
C6
GY
C8
W
Refer to last page (Foldout page).
M5 , E101
JMFWA0195GB

C1102, C1103, C1104 WHEEL SENSOR

DTC Logic

INFOID:0000000007659949

DTC DETECTION LOGIC

DTC	Display item	Malfunction detected condition	Possible cause
C1102	RR LH SENSOR-1*	When the circuit in the rear wheel sensor is open.	• Harness or connector • Wheel sensor • ABS actuator and electric unit (control unit) • Sensor rotor
C1103	FR RH SENSOR-1	When the circuit in the front RH wheel sensor is open.	
C1104	FR LH SENSOR-1	When the circuit in the front LH wheel sensor is open.	

*: Although “RR LH SENSOR-1” is indicated on the CONSULT-III screen, this means “rear wheel sensor”.

DTC CONFIRMATION PROCEDURE

1. DTC REPRODUCTION PROCEDURE

1. Start the engine and drive the vehicle at 30 km/h (19 MPH) or more for approximately 1 minute.
2. Perform self-diagnosis for “ABS” with CONSULT-III.

Is DTC “C1102”, “C1103” or “C1104” detected?

YES >> Proceed to diagnosis procedure. Refer to BR-11, "Diagnosis Procedure".
NO >> INSPECTION END

Diagnosis Procedure

INFOID:0000000007659950

CAUTION:
Never check between wheel sensor harness connector terminals.

1. CHECK TIRES

Check air pressure, wear and size.

Is the inspection result normal?

YES >> GO TO 2.
NO >> Adjust air pressure or replace error-detected parts.

2. CHECK WHEEL SENSOR

Check wheel sensor for damage, disconnection or looseness.

Is the inspection result normal?

YES >> GO TO 3.
NO >> Repair wheel sensor mount or replace wheel sensor.

3. CHECK SENSOR ROTOR

Check sensor rotor for damage, disconnection or looseness.

Is the inspection result normal?

YES >> GO TO 4.
NO >> Repair wheel sensor mount or replace sensor rotor.

4. CHECK WHEEL SENSOR HARNESS

1. Check the continuity between ABS actuator and electric unit (control unit) harness connector and wheel sensor harness connector. (Also check continuity when steering wheel is turned right and left and when sensor harness inside the wheel house is moved.)

Measurement connector and terminal for power supply circuit

ABS actuator and electric unit (control unit)		Wheel sensor		Continuity
Connector	Terminal	Connector	Terminal	
E7	9	E31 (Front RH)	2	Existed
	16	E15 (Front LH)		
	8	C6 (Rear)	1	

Measurement connector and terminal for signal circuit

ABS actuator and electric unit (control unit)		Wheel sensor		Continuity
Connector	Terminal	Connector	Terminal	
E7	10	E31 (Front RH)	1	Existed
	5	E15 (Front LH)		
	19	C6 (Rear)	2	

2. Check the continuity between ABS actuator and electric unit (control unit) harness connector.

ABS actuator and electric unit (control unit)				Continuity
Connector	Terminal	Connector	Terminal	
E7	9, 10	E7	1, 4	Not existed
	16, 5			
	8, 19			

Is the inspection result normal?

YES >> GO TO 5.
NO >> Repair or replace error-detected parts.

5. CHECK TERMINALS AND HARNESS CONNECTORS

1. Check ABS actuator and electric unit (control unit) pin terminals for damage or loose connection with harness connector.
2. Check each wheel sensor pin terminals for damage or loose connection with harness connector.

Is the inspection result normal?

YES >> GO TO 6.
NO >> Repair or replace error-detected parts.

6. REPLACE WHEEL SENSOR

1. Replace wheel sensor.
2. Erase self-diagnosis results for “ABS” with CONSULT-III.
3. Start the engine and drive the vehicle at 30 km/h (19 MPH) or more for approximately 1 minute.
4. Perform self-diagnosis for “ABS” with CONSULT-III.

Is DTC “C1102”, “C1103” or “C1104” detected?

YES >> Replace ABS actuator and electric unit (control unit).
NO >> INSPECTION END

C1106, C1107, C1108 WHEEL SENSOR

DTC Logic

INFOID:0000000007659951

DTC DETECTION LOGIC

DTC	Display item	Malfunction detected condition	Possible cause
C1106	RR LH SENSOR-2*	When the circuit in the rear wheel sensor is short-circuited. Or when the sensor power voltage is outside the standard. When the distance between the wheel sensor and sensor rotor is too large and the sensor pulse cannot be recognized by the control unit.	• Harness or connector • Wheel sensor • ABS actuator and electric unit (control unit) • Sensor rotor
C1107	FR RH SENSOR-2	When the circuit in the front RH wheel sensor is short-circuited. Or when the sensor power voltage is outside the standard. When the distance between the wheel sensor and sensor rotor is too large and the sensor pulse cannot be recognized by the control unit.	
C1108	FR LH SENSOR-2	When the circuit in the front LH wheel sensor is short-circuited. Or when the sensor power voltage is outside the standard. When the distance between the wheel sensor and sensor rotor is too large and the sensor pulse cannot be recognized by the control unit.	

*: Although “RR LH SENSOR-2” is indicated on the CONSULT-III screen, this means “rear wheel sensor”.

DTC CONFIRMATION PROCEDURE

1. DTC REPRODUCTION PROCEDURE

1. Start the engine and drive the vehicle at 30 km/h (19 MPH) or more for approximately 1 minute.
2. Perform self-diagnosis for “ABS” with CONSULT-III.

Is DTC “C1106”, “C1107” or “C1108” detected?

YES >> Proceed to diagnosis procedure. Refer to BR-13, "Diagnosis Procedure".
NO >> INSPECTION END

Diagnosis Procedure

INFOID:0000000007659952

CAUTION:
Never check between wheel sensor harness connector terminals.

1. CHECK TIRES

Check air pressure, wear and size.

Is the inspection result normal?

YES >> GO TO 2.
NO >> Adjust air pressure or replace error-detected parts.

2. CHECK WHEEL SENSOR

Check wheel sensor for damage, disconnection or looseness.

Is the inspection result normal?

YES >> GO TO 3.
NO >> Repair wheel sensor mount or replace wheel sensor.

3. CHECK SENSOR ROTOR

Check sensor rotor for damage, disconnection or looseness.

Is the inspection result normal?

YES >> GO TO 4.
NO >> Repair wheel sensor mount or replace sensor rotor.

4. CHECK WHEEL SENSOR HARNESS

1. Check the continuity between ABS actuator and electric unit (control unit) harness connector and wheel sensor harness connector. (Also check continuity when steering wheel is turned right and left and when sensor harness inside the wheel house is moved.)

Measurement connector and terminal for power supply circuit

ABS actuator and electric unit (control unit)		Wheel sensor		Continuity
Connector	Terminal	Connector	Terminal	
E7	9	E31 (Front RH)	2	Existed
	16	E15 (Front LH)		
	8	C6 (Rear)	1	

Measurement connector and terminal for signal circuit

ABS actuator and electric unit (control unit)		Wheel sensor		Continuity
Connector	Terminal	Connector	Terminal	
E7	10	E31 (Front RH)	1	Existed
	5	E15 (Front LH)		
	19	C6 (Rear)	2	

2. Check the continuity between ABS actuator and electric unit (control unit) harness connector.

ABS actuator and electric unit (control unit)				Continuity
Connector	Terminal	Connector	Terminal	
E7	9, 10	E7	1, 4	Not existed
	16, 5			
	8, 19			

Is the inspection result normal?

YES >> GO TO 5.
NO >> Repair or replace error-detected parts.

5. CHECK TERMINALS AND HARNESS CONNECTORS

1. Check ABS actuator and electric unit (control unit) pin terminals for damage or loose connection with harness connector.
2. Check each wheel sensor pin terminals for damage or loose connection with harness connector.

Is the inspection result normal?

YES >> GO TO 6.
NO >> Repair or replace error-detected parts.

6. REPLACE WHEEL SENSOR

1. Replace wheel sensor.
2. Erase self-diagnosis results for “ABS” with CONSULT-III.
3. Start the engine and drive the vehicle at 30 km/h (19 MPH) or more for approximately 1 minute.
4. Perform self-diagnosis for “ABS” with CONSULT-III.

Is DTC “C1106”, “C1107” or “C1108” detected?

YES >> Replace ABS actuator and electric unit (control unit).
NO >> INSPECTION END

C1115 WHEEL SENSOR

DTC Logic

INFOID:0000000007659953

DTC DETECTION LOGIC

DTC	Display item	Malfunction detected condition	Possible cause
C1115	ABS SENSOR [ABNORMAL SIGNAL]	Wheel sensor input has generated a malfunction.	• Harness or connector • Wheel sensor • ABS actuator and electric unit (control unit) • Sensor rotor

DTC CONFIRMATION PROCEDURE

1. DTC REPRODUCTION PROCEDURE

1. Start the engine and drive the vehicle at 30 km/h (19 MPH) or more for approximately 1 minute.
2. Perform self-diagnosis for “ABS” with CONSULT-III.

Is DTC “C1115” detected?

YES >> Proceed to diagnosis procedure. Refer to BR-15, "Diagnosis Procedure".
NO >> INSPECTION END

Diagnosis Procedure

INFOID:0000000007659954

CAUTION:
Never check between wheel sensor harness connector terminals.

1. CHECK TIRES

Check air pressure, wear and size.

Is the inspection result normal?

YES >> GO TO 2.
NO >> Adjust air pressure or replace error-detected parts.

2. CHECK WHEEL SENSOR

Check wheel sensor for damage, disconnection or looseness.

Is the inspection result normal?

YES >> GO TO 3.
NO >> Repair wheel sensor mount or replace wheel sensor.

3. CHECK SENSOR ROTOR

Check sensor rotor for damage, disconnection or looseness.

Is the inspection result normal?

YES >> GO TO 4.
NO >> Repair wheel sensor mount or replace sensor rotor.

4. CHECK WHEEL SENSOR HARNESS

1. Check the continuity between ABS actuator and electric unit (control unit) harness connector and wheel sensor harness connector. (Also check continuity when steering wheel is turned right and left and when sensor harness inside the wheel house is moved.)

Measurement connector and terminal for power supply circuit

ABS actuator and electric unit (control unit)		Wheel sensor		Continuity
Connector	Terminal	Connector	Terminal	
E7	9	E31 (Front RH)	2	Existed
	16	E15 (Front LH)		
	8	C6 (Rear)	1	

Measurement connector and terminal for signal circuit

ABS actuator and electric unit (control unit)		Wheel sensor		Continuity
Connector	Terminal	Connector	Terminal	
E7	10	E31 (Front RH)	1	Existed
	5	E15 (Front LH)		
	19	C6 (Rear)	2	

2. Check the continuity between ABS actuator and electric unit (control unit) harness connector.

ABS actuator and electric unit (control unit)				Continuity
Connector	Terminal	Connector	Terminal	
E7	9, 10	E7	1, 4	Not existed
	16, 5			
	8, 19			

Is the inspection result normal?

YES >> GO TO 5.
NO >> Repair or replace error-detected parts.

5. CHECK TERMINALS AND HARNESS CONNECTORS

1. Check ABS actuator and electric unit (control unit) pin terminals for damage or loose connection with harness connector.
2. Check each wheel sensor pin terminals for damage or loose connection with harness connector.

Is the inspection result normal?

YES >> GO TO 6.
NO >> Repair or replace error-detected parts.

6. REPLACE WHEEL SENSOR

1. Replace wheel sensor.
2. Erase self-diagnosis results for “ABS” with CONSULT-III.
3. Start the engine and drive the vehicle at 30 km/h (19 MPH) or more for approximately 1 minute.
4. Perform self-diagnosis for “ABS” with CONSULT-III.

Is DTC “C1115” detected?

YES >> Replace ABS actuator and electric unit (control unit).
NO >> INSPECTION END

SERVICE INFORMATION

MODIFICATION NOTICE

Major Modification Item

INFOID:0000000007660019

Wiring diagram has been changed.

TROUBLE DIAGNOSIS

Wiring Diagram

INFOID:0000000007660021

LHD

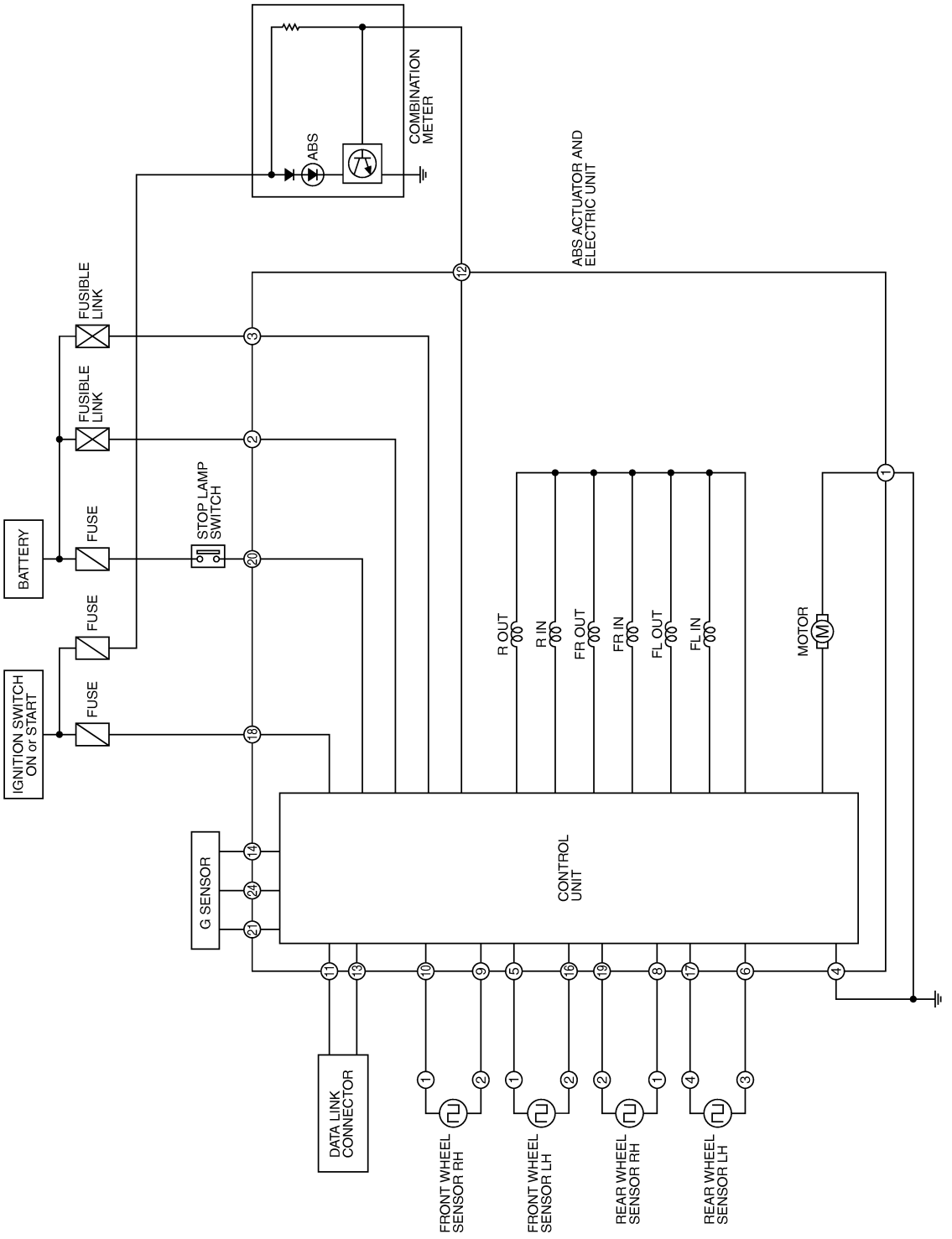

JMFWA0196GB

BR-ABS-07

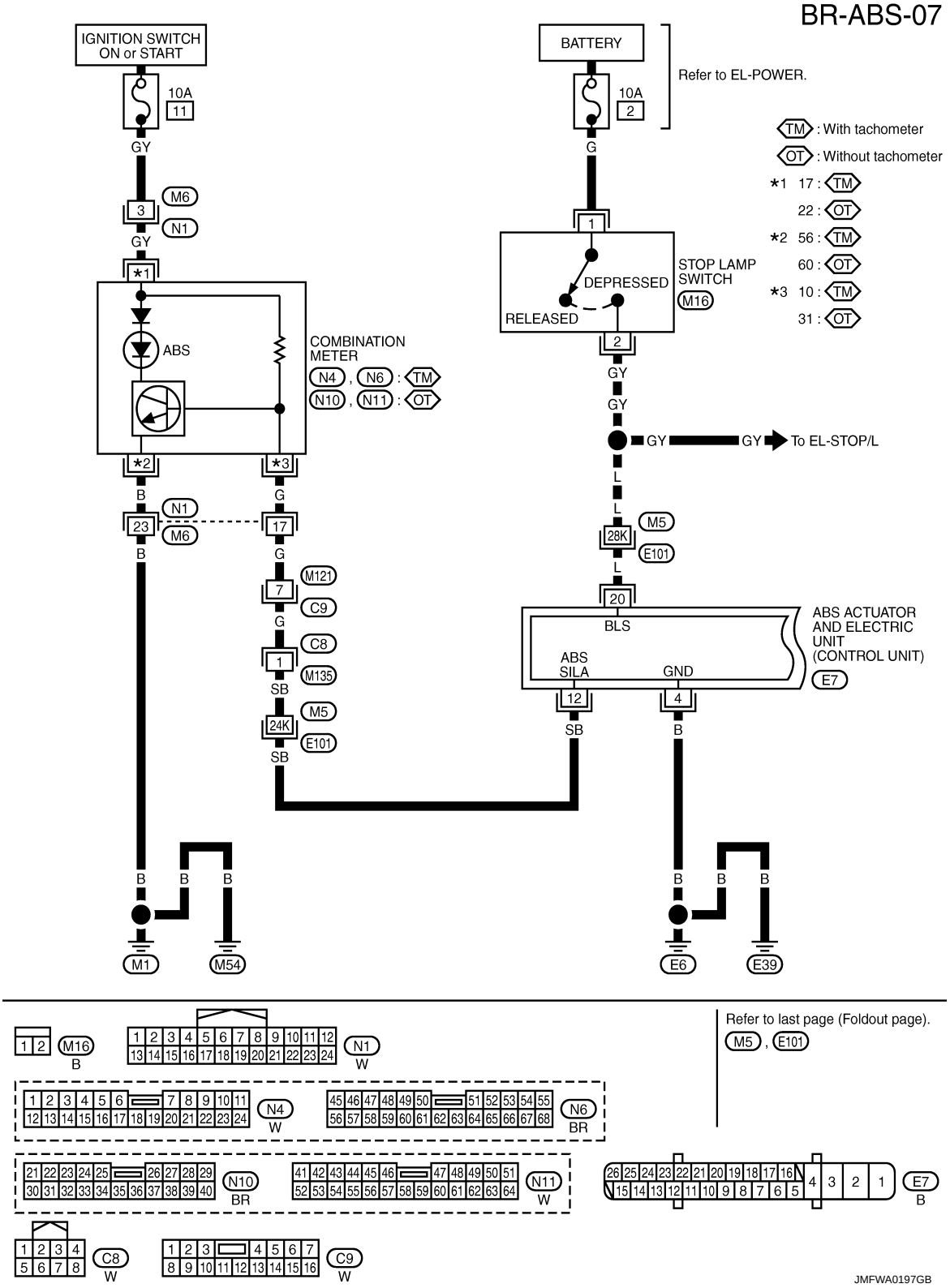
IGNITION SWITCH ON or START
10A 11
GY
M6
3
N1
GY
*1
ABS
COMBINATION METER
N4 , N6 : TM
N10 , N11 : OT
*2
*3
B
G
N1
23
M6
17
B
G
M121
7
C9
G
C8
1
M135
SB
M5
24K
E101
SB
BATTERY
10A 2
Refer to EL-POWER.
G
1
DEPRESSED
RELEASED
STOP LAMP SWITCH
M16
2
GY
GY
GY
GY
To EL-STOP/L
L
L
M5
28K
E101
L
20
BLS
ABS SILA
GND
ABS ACTUATOR AND ELECTRIC UNIT (CONTROL UNIT)
E7
12
4
SB
B
TM : With tachometer
OT : Without tachometer
*1 17 : TM
22 : OT
*2 56 : TM
60 : OT
*3 10 : TM
31 : OT
B B B
B B B
M1
M54
E6
E39
Refer to last page (Foldout page).
M5 , E101
M16
B
N1
W
N4
W
N6
BR
N10
BR
N11
W
E7
B
C8
W
C9
W
JMFWA0197GB

BR-ABS-08

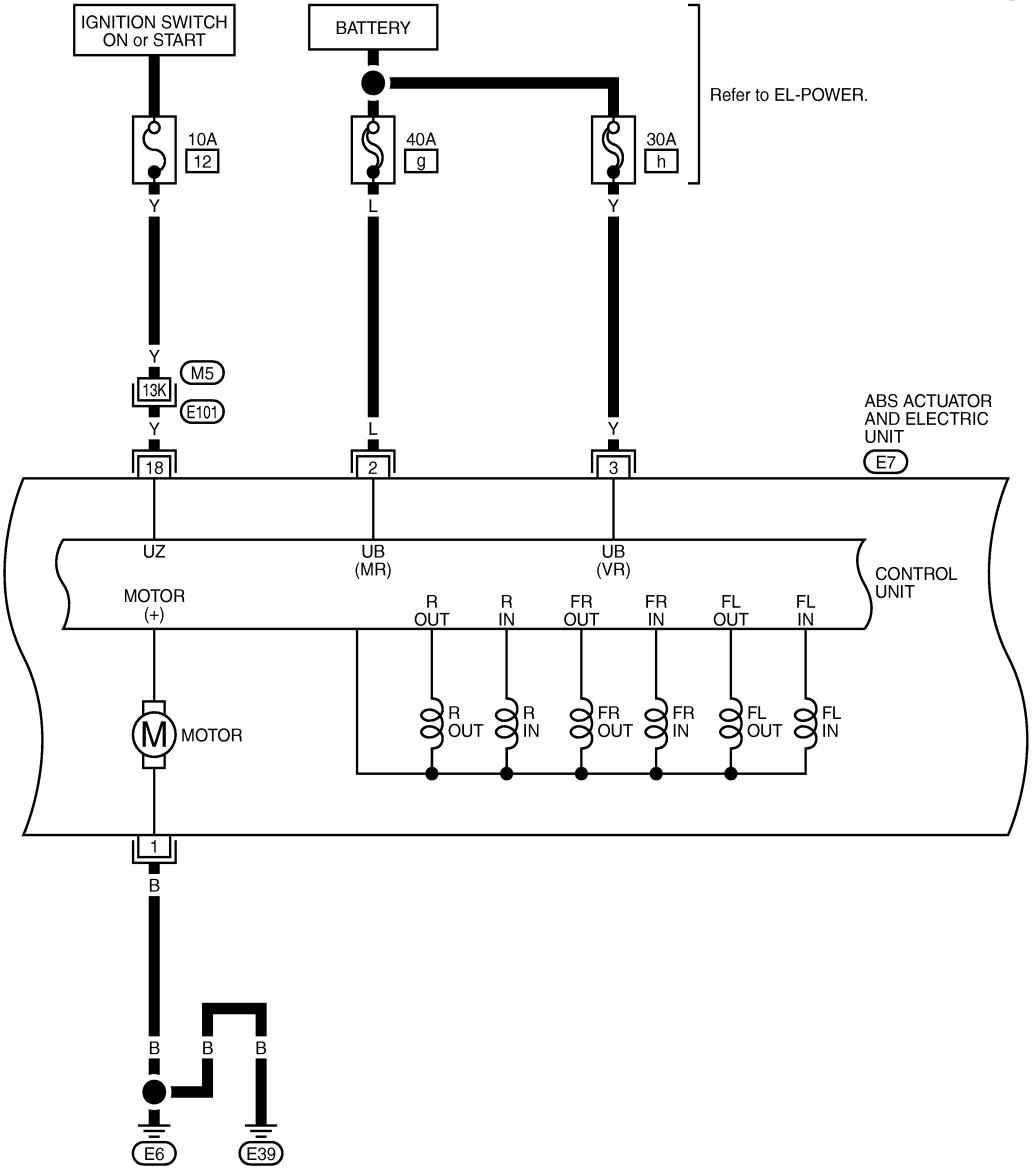

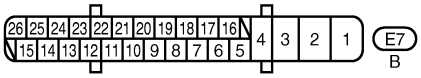

Refer to last page (Foldout page).
M5 , E101

JMFWA0198GB

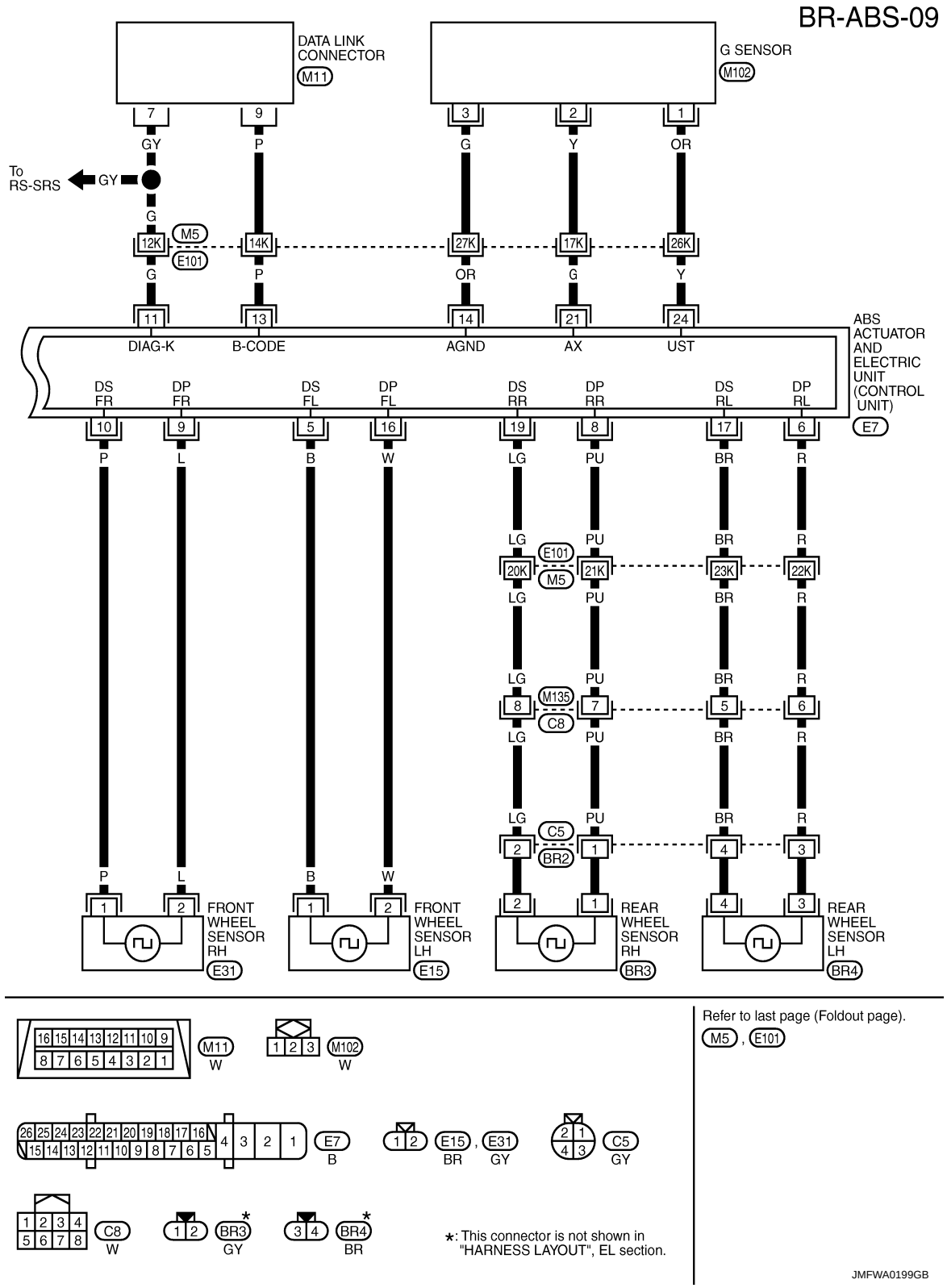
BR-ABS-09
DATA LINK CONNECTOR
M11
G SENSOR
M102
To RS-SRS
GY
M5
E101
DIAG-K
B-CODE
AGND
AX
UST
ABS ACTUATOR AND ELECTRIC UNIT (CONTROL UNIT)
E7
DS FR
DP FR
DS FL
DP FL
DS RR
DP RR
DS RL
DP RL
M135
C8
C5
BR2
FRONT WHEEL SENSOR RH
E31
FRONT WHEEL SENSOR LH
E15
REAR WHEEL SENSOR RH
BR3
REAR WHEEL SENSOR LH
BR4
Refer to last page (Foldout page).
M5 , E101
M11 W
M102 W
E7 B
E15 BR , E31 GY
C5 GY
C8 W
BR3 GY
BR4 BR
*: This connector is not shown in "HARNESS LAYOUT", EL section.
JMFWA0199GB

RHD

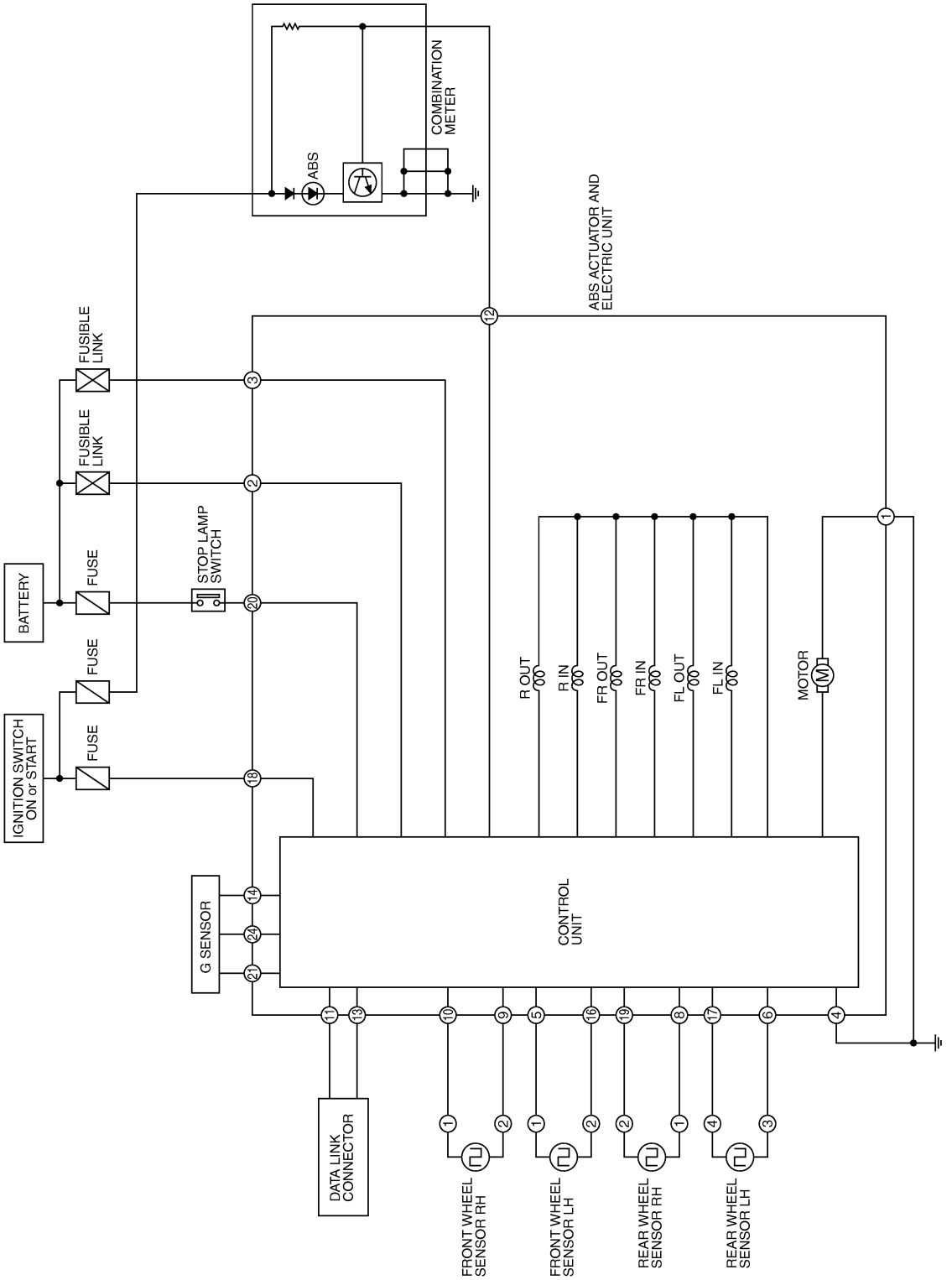

JMFWA0200GB

BR-ABS-10

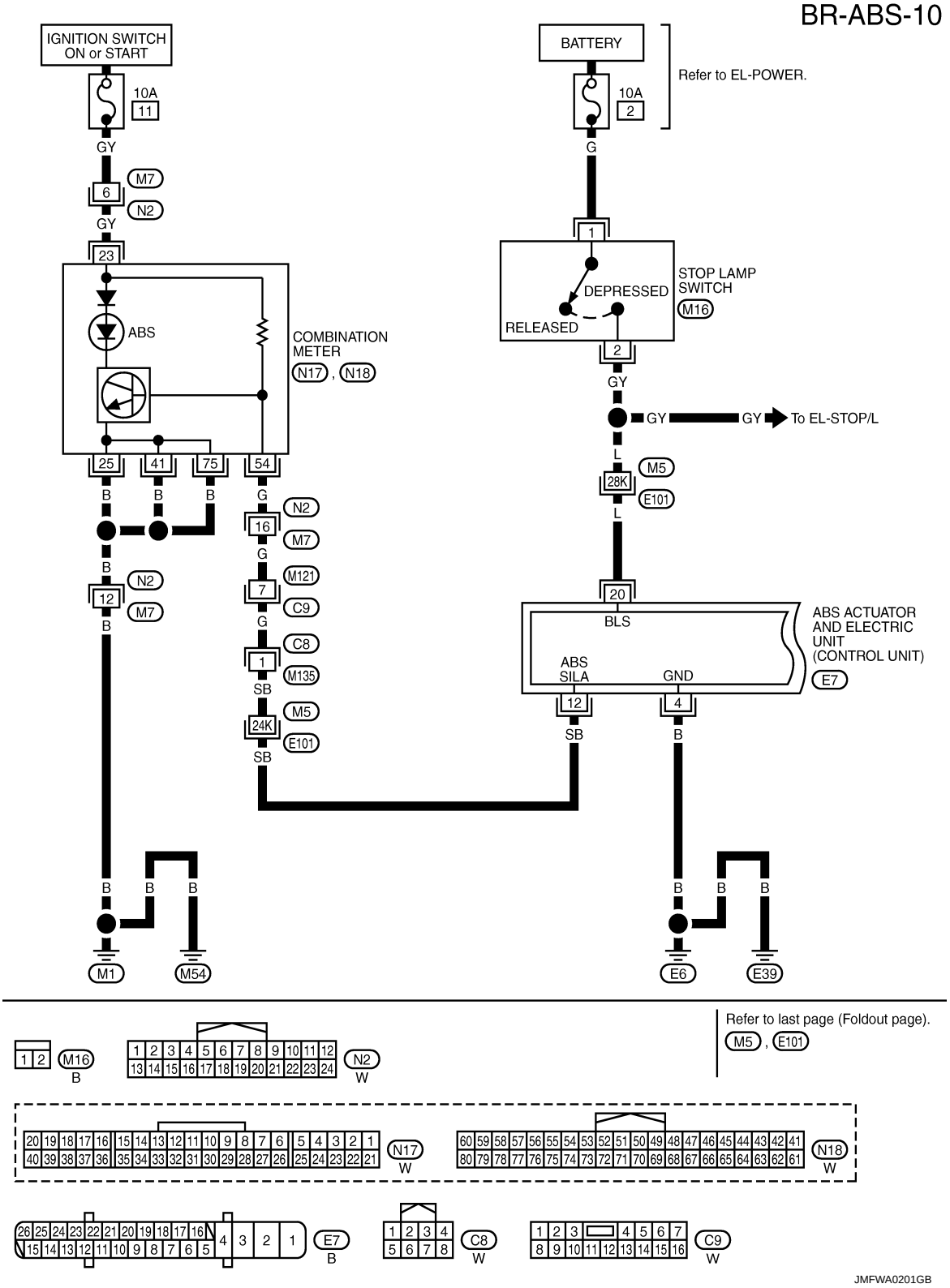
IGNITION SWITCH ON or START
10A
11
GY
M7
6
N2
GY
23
ABS
COMBINATION METER
N17 , N18
25
41
75
54
B
B
B
G
N2
16
M7
G
M121
7
C9
G
C8
1
M135
SB
M5
24K
E101
SB
B
N2
12
M7
B
M1
M54
BATTERY
10A
2
G
Refer to EL-POWER.
1
STOP LAMP SWITCH
DEPRESSED
RELEASED
M16
2
GY
GY
GY
To EL-STOP/L
L
M5
28K
E101
L
20
BLS
ABS ACTUATOR AND ELECTRIC UNIT (CONTROL UNIT)
ABS SILA
GND
E7
12
4
SB
B
B
B
B
B
B
E6
E39
Refer to last page (Foldout page).
M5 , E101
M16
B
N2
W
N17
W
N18
W
E7
B
C8
W
C9
W
JMFWA0201GB

BR-ABS-11

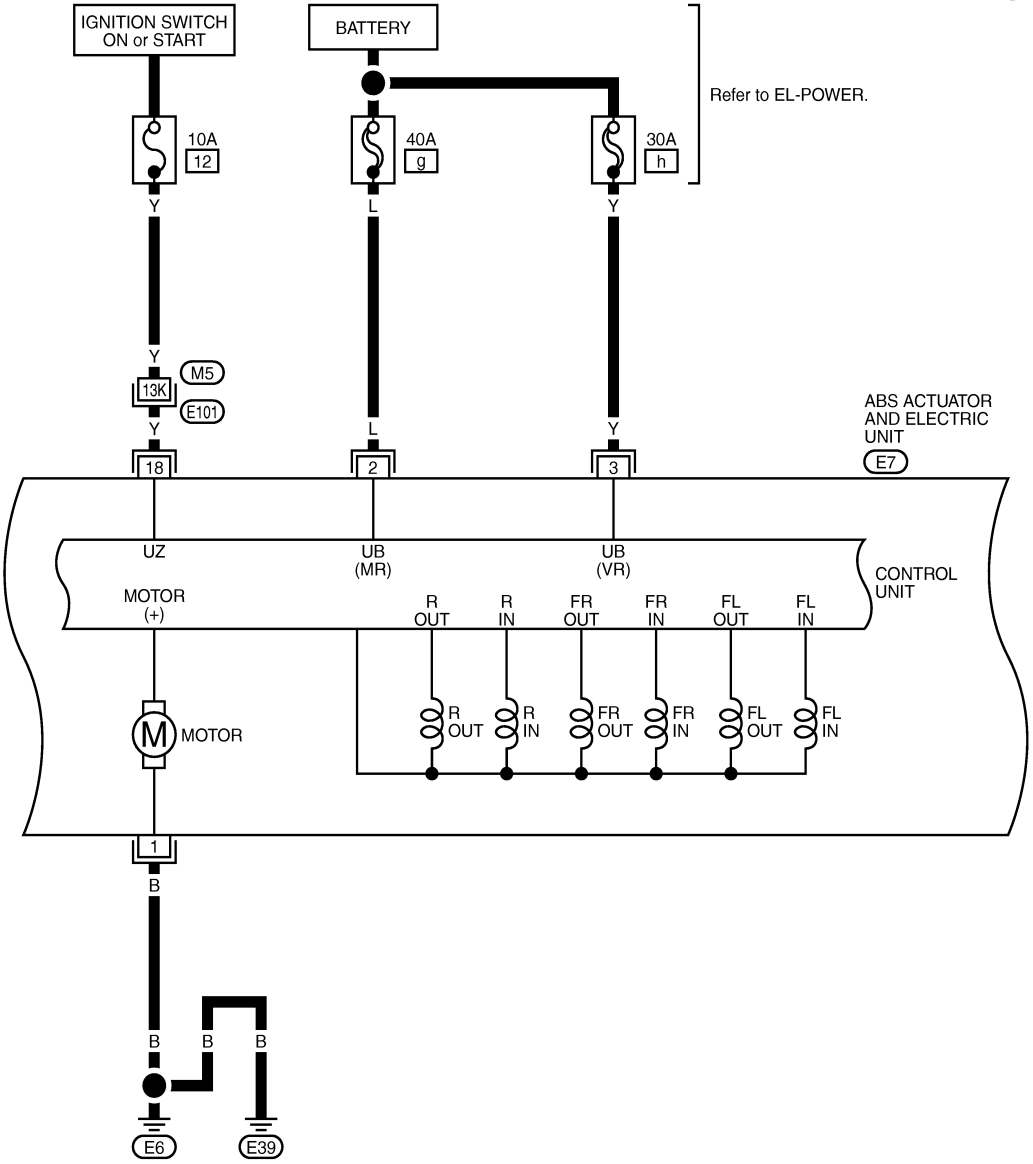

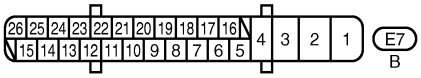

Refer to last page (Foldout page).
M5 , E101

JMFWA0202GB

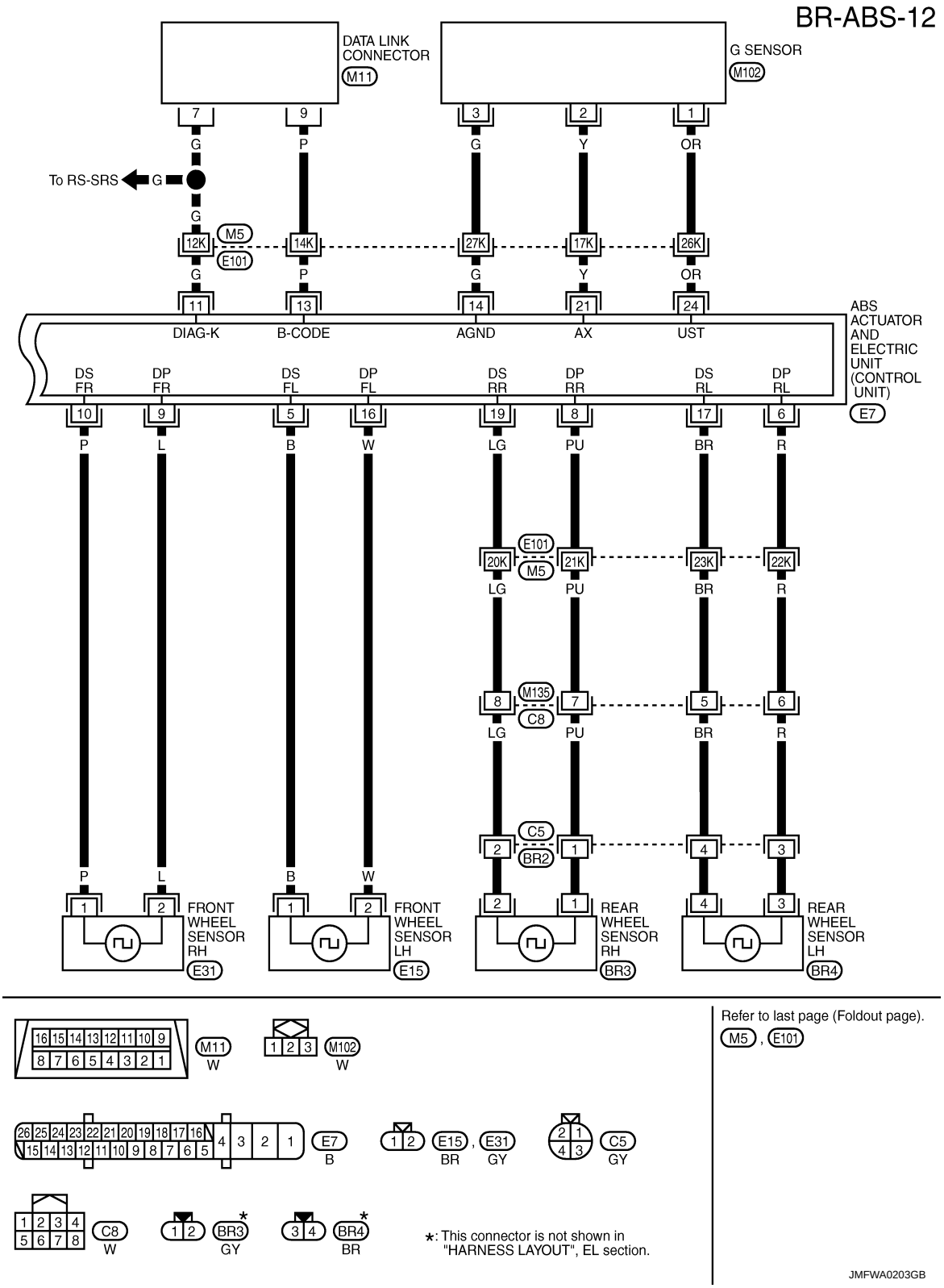
BR-ABS-12
DATA LINK CONNECTOR
M11
G SENSOR
M102
To RS-SRS
M5
E101
DIAG-K
B-CODE
AGND
AX
UST
ABS ACTUATOR AND ELECTRIC UNIT (CONTROL UNIT)
E7
DS FR
DP FR
DS FL
DP FL
DS RR
DP RR
DS RL
DP RL
M135
C8
C5
BR2
FRONT WHEEL SENSOR RH
E31
FRONT WHEEL SENSOR LH
E15
REAR WHEEL SENSOR RH
BR3
REAR WHEEL SENSOR LH
BR4
Refer to last page (Foldout page).
M5 , E101
M11 W
M102 W
E7 B
E15 BR , E31 GY
C5 GY
C8 W
BR3 GY
BR4 BR
*: This connector is not shown in "HARNESS LAYOUT", EL section.
JMFWA0203GB