SECTION BR
BRAKE SYSTEM

CONTENTS

ABS (3 SENSOR)

SERVICE INFORMATION 3

MODIFICATION NOTICE 3
Major Modification Item 3

DTC INDEX 4
C1101 - C1116 4
C1120 - C1191 4

PRECAUTIONS 5
Precaution for Supplemental Restraint System (SRS) "AIR BAG" and "SEAT BELT PRE-TENSIONER" 5
Precaution for Brake System 5
Precaution for Brake Control 5

PREPARATION 6
Special Service Tool 6

SYSTEM DESCRIPTION 7
Schematic 7
Function 7
Operation That Is Not "System Error" 7
Fail-Safe Function 7
Hydraulic Circuit Diagram 8

TROUBLE DIAGNOSIS 9
Component Parts Location 9
Wiring Diagram 9
Control Unit Input/Output Signal Standard 24
CONSULT-III Function 25
Self-Diagnosis 25
Data Monitor 27
Active Test 27
Symptom Chart 28

C1102, C1103, C1104 WHEEL SENSOR 29
DTC Logic 29
Diagnosis Procedure 29

C1106, C1107, C1108 WHEEL SENSOR 31
DTC Logic 31
Diagnosis Procedure 31

C1109 POWER AND GROUND SYSTEM 33
Description 33
DTC Logic 33
Diagnosis Procedure 33

C1110 ABS ACTUATOR AND ELECTRIC UNIT (CONTROL UNIT) 35
DTC Logic 35
Diagnosis Procedure 35

C1111 ABS MOTOR, MOTOR RELAY SYSTEM 36
DTC Logic 36
Diagnosis Procedure 36

C1114 ACTUATOR RELAY SYSTEM 37
DTC Logic 37
Diagnosis Procedure 37

C1115 WHEEL SENSOR 38
DTC Logic 38
Diagnosis Procedure 38

C1116 STOP LAMP SWITCH 40
DTC Logic 40
Diagnosis Procedure 40
Component Inspection 41

C1120, C1122, C1190 IN ABS SOL 42
DTC Logic 42
Diagnosis Procedure 42

C1121, C1123, C1191 OUT ABS SOL 44
DTC Logic 44
Diagnosis Procedure 44

WHEEL SENSOR 46
Exploded View 46

Removal and Installation 47

ACTUATOR AND ELECTRIC UNIT 48
Exploded View 48
Removal and Installation 48

ABS (4 SENSOR)

SERVICE INFORMATION 49

MODIFICATION NOTICE 49
Major Modification Item 49

DTC INDEX 50
C1101 - C1116 50
C1120 - C1191 50

PRECAUTIONS 51
Precaution for Supplemental Restraint System (SRS) "AIR BAG" and "SEAT BELT PRE-TENSIONER" 51
Precaution for Brake System 51
Precaution for Brake Control 51

PREPARATION 52
Special Service Tool 52

SYSTEM DESCRIPTION 53
Schematic 53
Function 53
Operation That Is Not "System Error" 53
Fail-Safe Function 53
Hydraulic Circuit Diagram 54

TROUBLE DIAGNOSIS 55
Component Parts Location 55
Wiring Diagram 55
Control Unit Input/Output Signal Standard 70
CONSULT-III Function 71
Self-Diagnosis 71
Data Monitor 73
Active Test 74
Symptom Chart 74

C1101, C1102, C1103, C1104 WHEEL SENSOR 76
DTC Logic 76
Diagnosis Procedure 76

C1105, C1106, C1107, C1108 WHEEL SENSOR 78
DTC Logic 78
Diagnosis Procedure 78

C1109 POWER AND GROUND SYSTEM 80
Description 80
DTC Logic 80
Diagnosis Procedure 80

C1110 ABS ACTUATOR AND ELECTRIC UNIT (CONTROL UNIT) 82
DTC Logic 82
Diagnosis Procedure 82

C1111 ABS MOTOR, MOTOR RELAY SYSTEM 83
DTC Logic 83
Diagnosis Procedure 83

C1113 G SENSOR 84
DTC Logic 84
Diagnosis Procedure 84

C1114 ACTUATOR RELAY SYSTEM 86
DTC Logic 86
Diagnosis Procedure 86

C1115 WHEEL SENSOR 87
DTC Logic 87
Diagnosis Procedure 87

C1116 STOP LAMP SWITCH 89
DTC Logic 89
Diagnosis Procedure 89
Component Inspection 90

C1120, C1122, C1190 IN ABS SOL 91
DTC Logic 91
Diagnosis Procedure 91

C1121, C1123, C1191 OUT ABS SOL 93
DTC Logic 93
Diagnosis Procedure 93

WHEEL SENSOR 95
Exploded View 95
Removal and Installation 96

ACTUATOR AND ELECTRIC UNIT 97
Exploded View 97
Removal and Installation 97

G SENSOR 98
Exploded View 98
Removal and Installation 98

SERVICE INFORMATION

MODIFICATION NOTICE

Major Modification Item

INFOID:0000000005849097

ABS system has been changed (except for Portugal).

DTC INDEX

C1101 - C1116

INFOID:0000000005849098

DTC	Item (CONSULT-III screen item)	Reference
C1102	RR LH SENSOR-1	BR-29, "DTC Logic"
C1103	FR RH SENSOR-1	
C1104	FR LH SENSOR-1	
C1106	RR LH SENSOR-2	BR-31, "DTC Logic"
C1107	FR RH SENSOR-2	
C1108	FR LH SENSOR-2	
C1109	BATTERY VOLTAGE [ABNORMAL]	BR-33, "DTC Logic"
C1110	CONTROLLER FAILURE	BR-35, "DTC Logic"
C1111	PUMP MOTOR	BR-36, "DTC Logic"
C1114	MAIN RELAY	BR-37, "DTC Logic"
C1115	ABS SENSOR [ABNORMAL SIGNAL]	BR-38, "DTC Logic"
C1116	STOP LAMP SW	BR-40, "DTC Logic"

C1120 - C1191

INFOID:0000000005849099

DTC	Item (CONSULT-III screen item)	Reference
C1120	FR LH IN ABS SOL	BR-42, "DTC Logic"
C1121	FR LH OUT ABS SOL	BR-44, "DTC Logic"
C1122	FR RH IN ABS SOL	BR-42, "DTC Logic"
C1123	FR RH OUT ABS SOL	BR-44, "DTC Logic"
C1190	REAR IN ABS SOL	BR-42, "DTC Logic"
C1191	REAR OUT ABS SOL	BR-44, "DTC Logic"

PRECAUTIONS

Precaution for Supplemental Restraint System (SRS) "AIR BAG" and "SEAT BELT PRE-TENSIONER"

INFOID:0000000005849100

The Supplemental Restraint System such as “AIR BAG” and “SEAT BELT PRE-TENSIONER”, used along with a front seat belt, helps to reduce the risk or severity of injury to the driver and front passenger for certain types of collision. Information necessary to service the system safely is included in the SRS and SB section of this Service Manual.

WARNING:

- **To avoid rendering the SRS inoperative, which could increase the risk of personal injury or death in the event of a collision which would result in air bag inflation, all maintenance must be performed by an authorized NISSAN/INFINITI dealer.**
- **Improper maintenance, including incorrect removal and installation of the SRS, can lead to personal injury caused by unintentional activation of the system. For removal of Spiral Cable and Air Bag Module, see the SRS section.**
- **Do not use electrical test equipment on any circuit related to the SRS unless instructed to in this Service Manual. SRS wiring harnesses can be identified by yellow and/or orange harnesses or harness connectors.**

Precaution for Brake System

INFOID:0000000005849101

- Brake fluid use refer to MA-12, "Fluids and Lubricants".
- Do not reuse drained brake fluid.
- Be careful not to splash brake fluid on painted areas.If brake fluid is splashed, wipe it off and flush the area with water immediately.
- Never use mineral oils such as gasoline or kerosene. They will ruin rubber parts of the hydraulic system.
- Use flare nut wrench when removing and installing brake tube.
- Brake system is an important safety parts. If a brake fluid leak is detected, always disassemble the suspect parts. If any non-standard condition is detected, replace parts with new one.
- Before working, turn ignition switch OFF and disconnect connector for ABS actuator and electric unit or battery negative terminal.

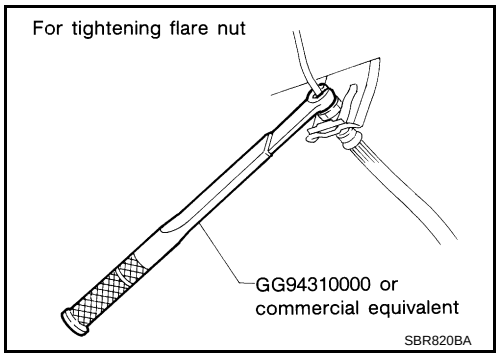

WARNING:

Clean brake pads and shoes with a waste cloth, then wipe with a dust collector.

Precaution for Brake Control

INFOID:0000000005849102

- During ABS operation, brake pedal lightly vibrates and a mechanical noise may be heard. This is normal.
- Just after starting vehicle after ignition switch ON, brake pedal may vibrate or motor operating noise may be heard from passenger compartment (rear floor). This is a normal status of operation check.
- Stopping distance may be longer than that of vehicles without ABS when vehicle drives on rough, gravel, or snow-covered (fresh, deep snow) roads.
- When an error is indicated by ABS or another warning lamp, collect all necessary information from customer (what symptoms are present under what conditions) and check for simple causes before starting diagnostic servicing. Besides electrical system inspection, check brake booster operation, brake fluid level, and fluid leaks.
- If tire size and type are used in an improper combination, or brake pads are not Genuine NISSAN parts, stopping distance or steering stability may deteriorate.
- If there is a radio, antenna, or antenna lead-in wire (including wiring) near control module, ABS function may have a malfunction or error.
- If aftermarket parts (car stereo, CD player, etc.) have been installed, check for incidents such as harness pinches, open circuits, and improper wiring.

PREPARATION

Special Service Tool

INFOID:0000000005849103

Tool name Tool number		Description
Flare nut torque wrench a: 10 mm (0.39 in) GG94310000	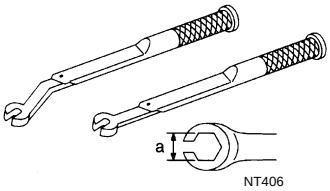	Removing and installing brake piping

SYSTEM DESCRIPTION

Schematic

INFOID:0000000005849104

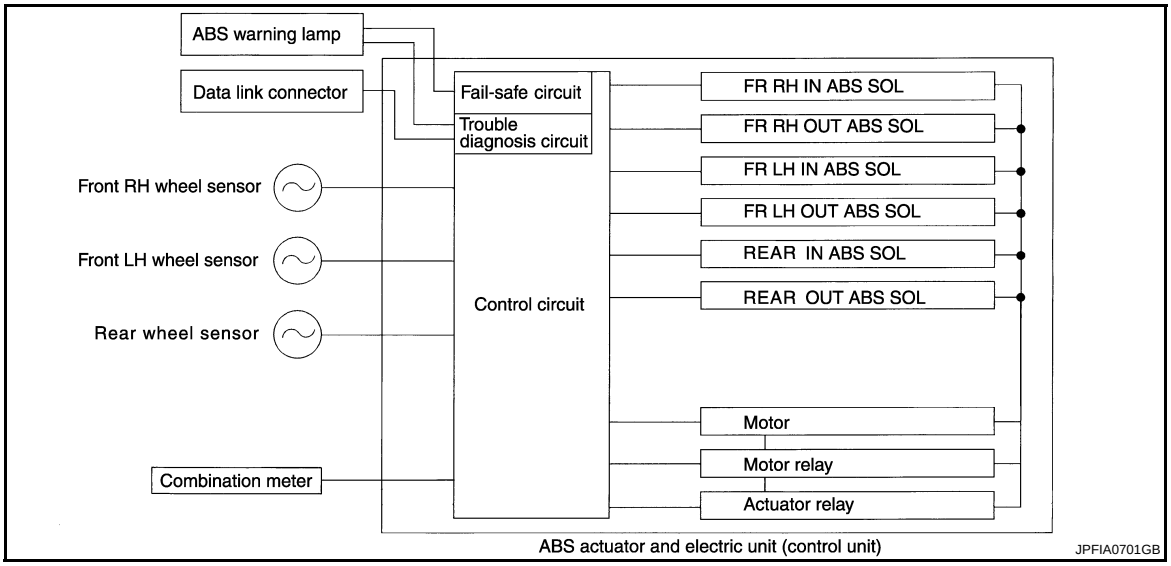

Function

INFOID:0000000005849105

ABS

- The Anti-Lock Braking System is a function that detects wheel revolution while braking, and it improves handling stability during sudden braking by electrically preventing 4 wheels lock. Maneuverability is also improved for avoiding obstacles.
- Electrical system diagnosis by CONSULT-III is available.

Operation That Is Not "System Error"

INFOID:0000000005849106

ABS

- When starting engine or just after starting vehicle, brake pedal may vibrate or the motor operating noise may be heard from engine room. This is a normal state of the operation check.
- During ABS operation, brake pedal lightly vibrates and a mechanical noise may be heard. This is normal.
- Stopping distance may be longer than that of vehicles without ABS when vehicle drives on rough, gravel, or snow-covered (fresh, deep snow) roads.

Fail-Safe Function

INFOID:0000000005849107

- ABS warning lamp turns ON if error (malfunction) is detected in ABS system. ABS control does not function. The brake function becomes same as the vehicle without ABS.

Hydraulic Circuit Diagram

INFOID:0000000005849108

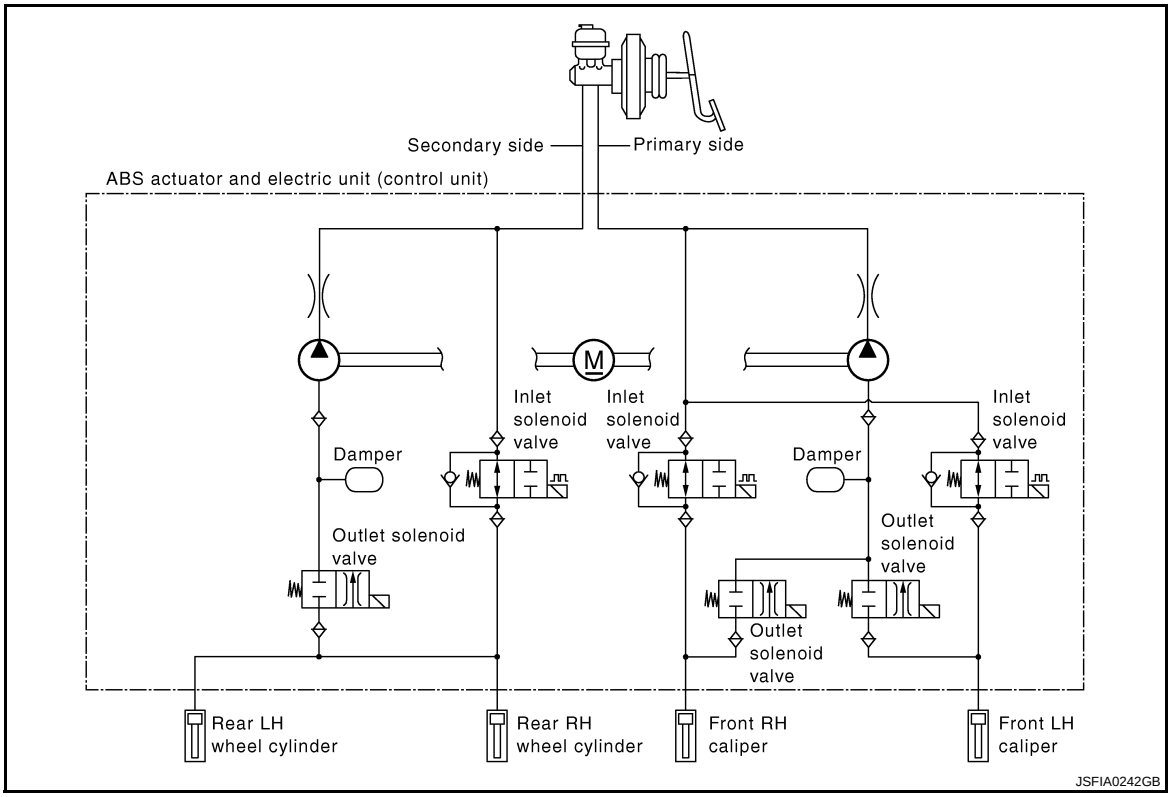

TROUBLE DIAGNOSIS

Component Parts Location

INFOID:0000000005849109

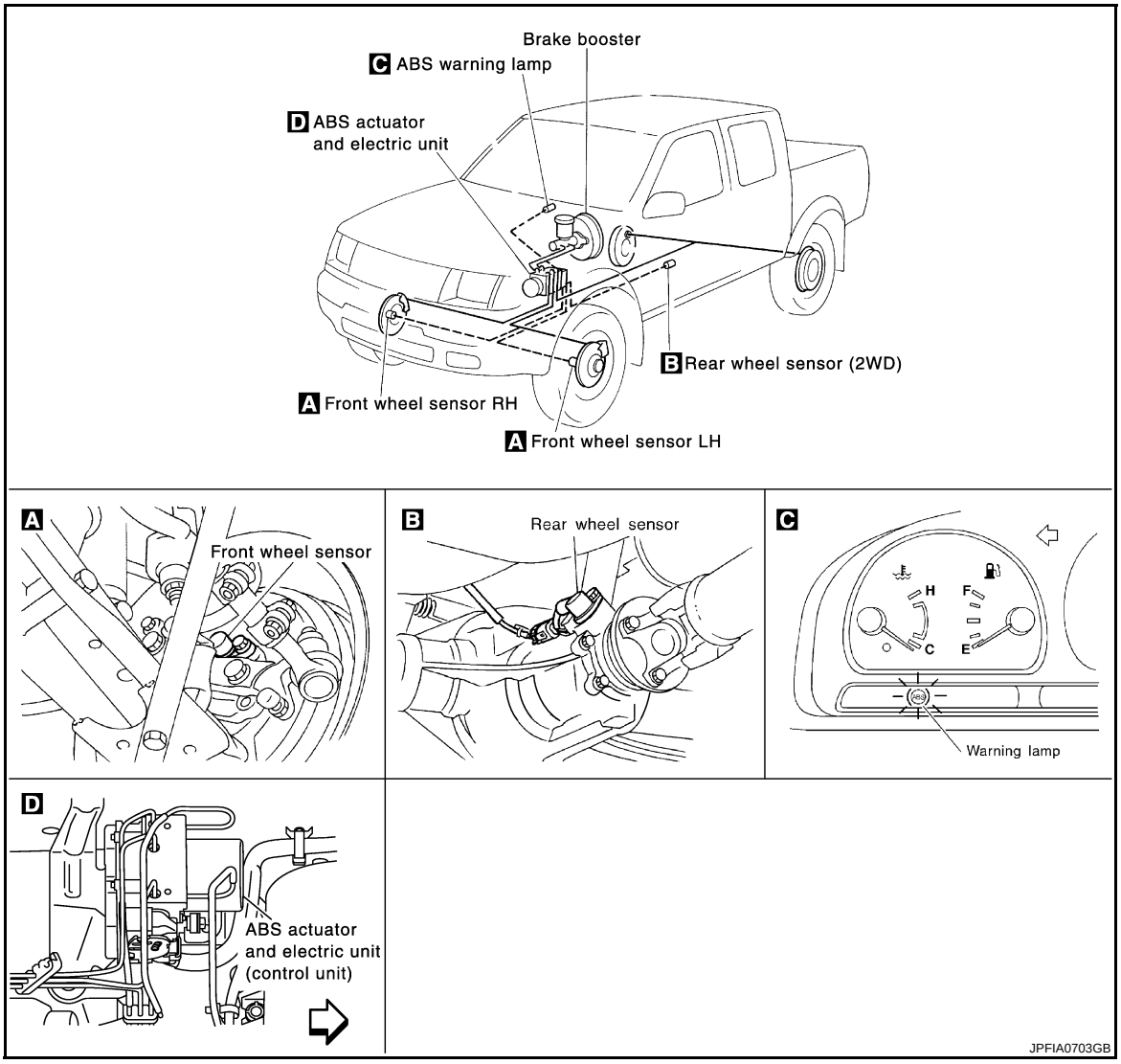

Wiring Diagram

INFOID:0000000005849111

FOR EUROPE

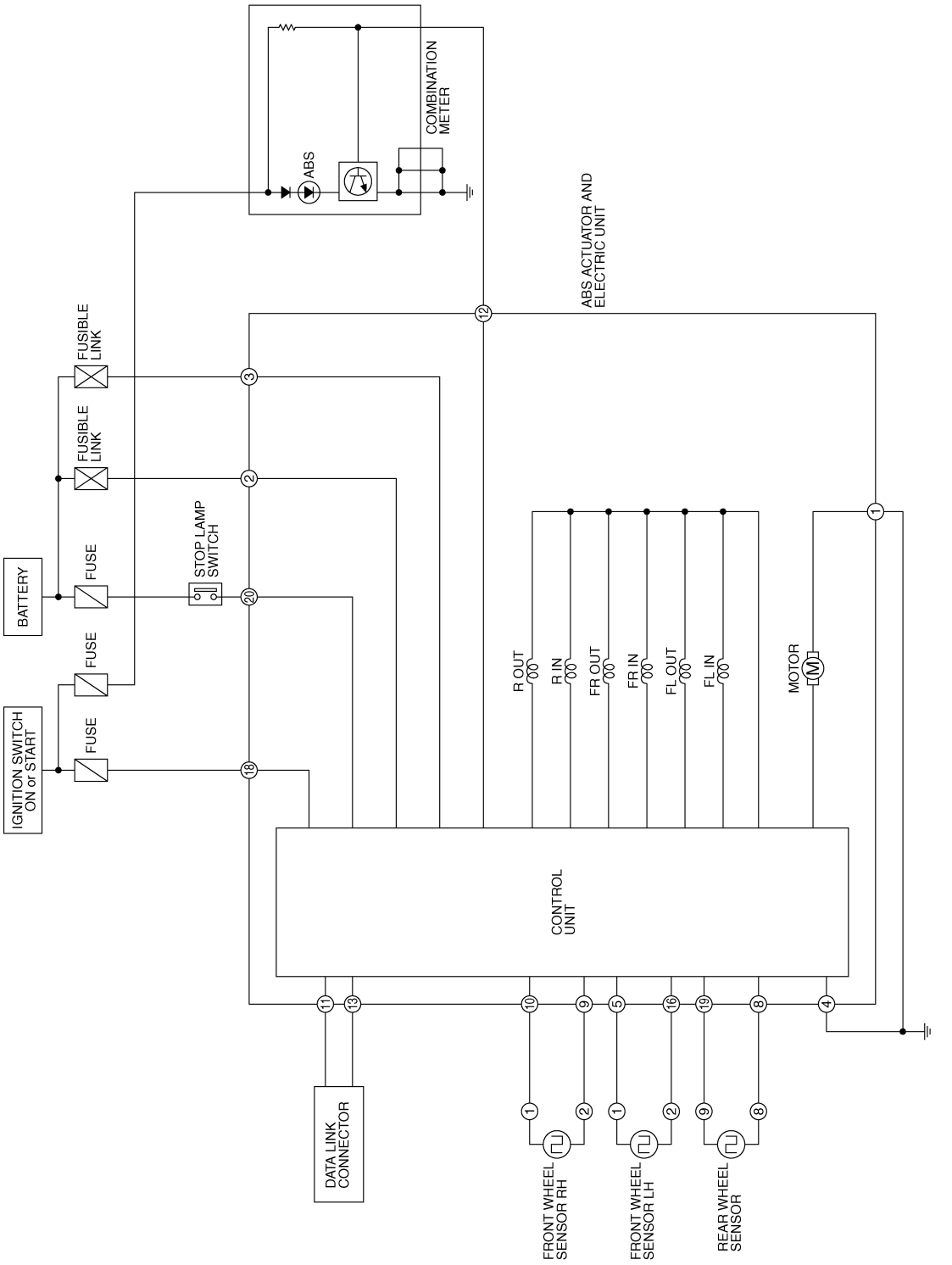
COMBINATION METER
ABS
ABS ACTUATOR AND ELECTRIC UNIT
FUSIBLE LINK
FUSIBLE LINK
FUSE
FUSE
FUSE
BATTERY
IGNITION SWITCH ON or START
STOP LAMP SWITCH
R OUT
R IN
FR OUT
FR IN
FL OUT
FL IN
MOTOR
CONTROL UNIT
DATA LINK CONNECTOR
FRONT WHEEL SENSOR RH
FRONT WHEEL SENSOR LH
REAR WHEEL SENSOR
JCFWM0486GE

BR-ABS-01

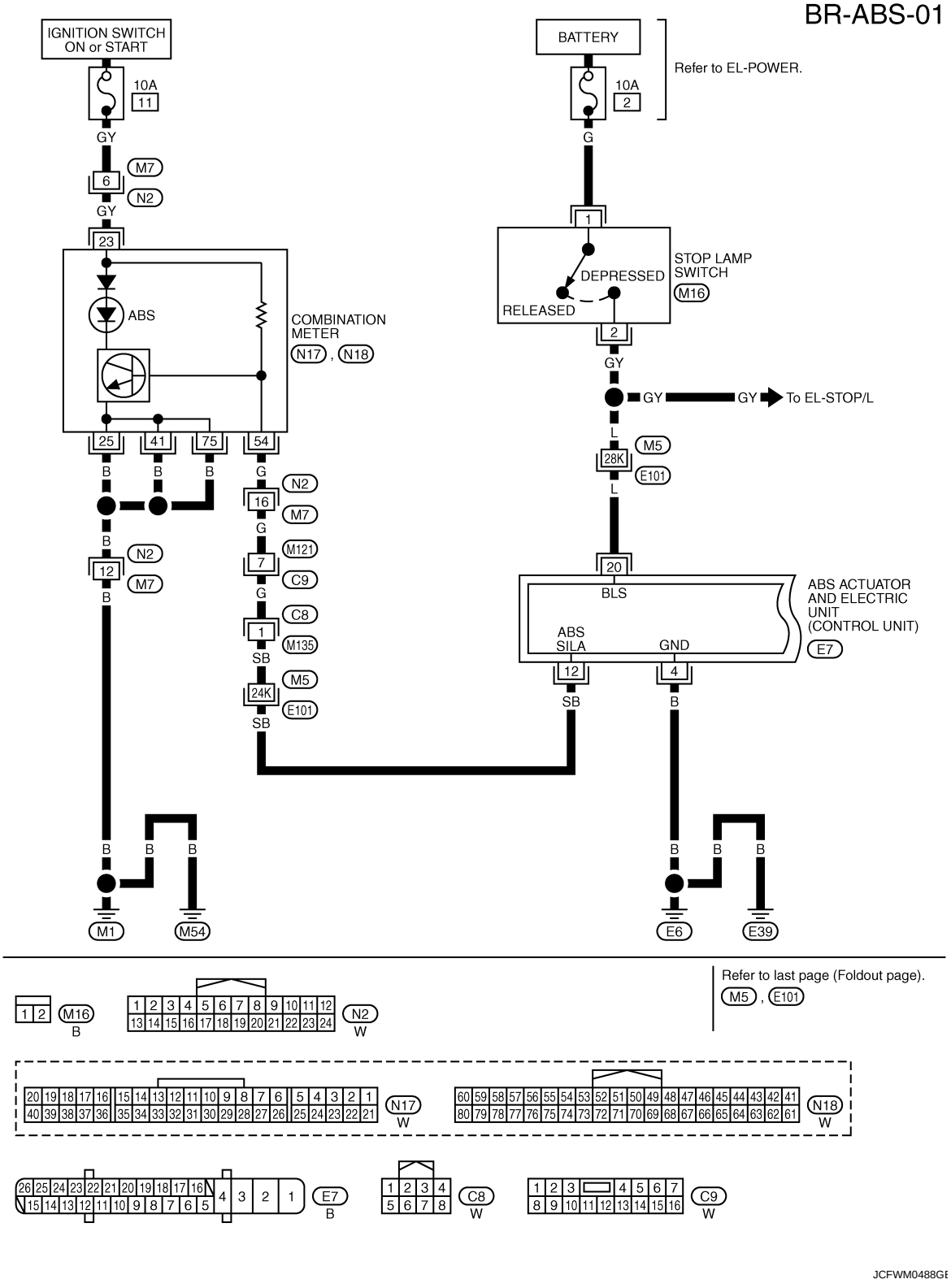
IGNITION SWITCH ON or START
10A 11
GY
M7
6
N2
GY
23
ABS
COMBINATION METER
N17 , N18
25 41 75 54
B B B G
N2
16
M7
G
M121
7
C9
G
C8
1
M135
SB
M5
24K
E101
SB
B
N2
12
M7
B
B B B
M1 M54
BATTERY
10A 2
Refer to EL-POWER.
G
1
STOP LAMP SWITCH
DEPRESSED
RELEASED
M16
2
GY
GY GY To EL-STOP/L
L
M5
28K
E101
L
20
BLS
ABS ACTUATOR AND ELECTRIC UNIT (CONTROL UNIT)
ABS SILA
GND
E7
12 4
SB B
B B B
E6 E39
Refer to last page (Foldout page).
M5 , E101
M16 B
N2 W
N17 W
N18 W
E7 B
C8 W
C9 W
JCFWM0488GE

BR-ABS-02

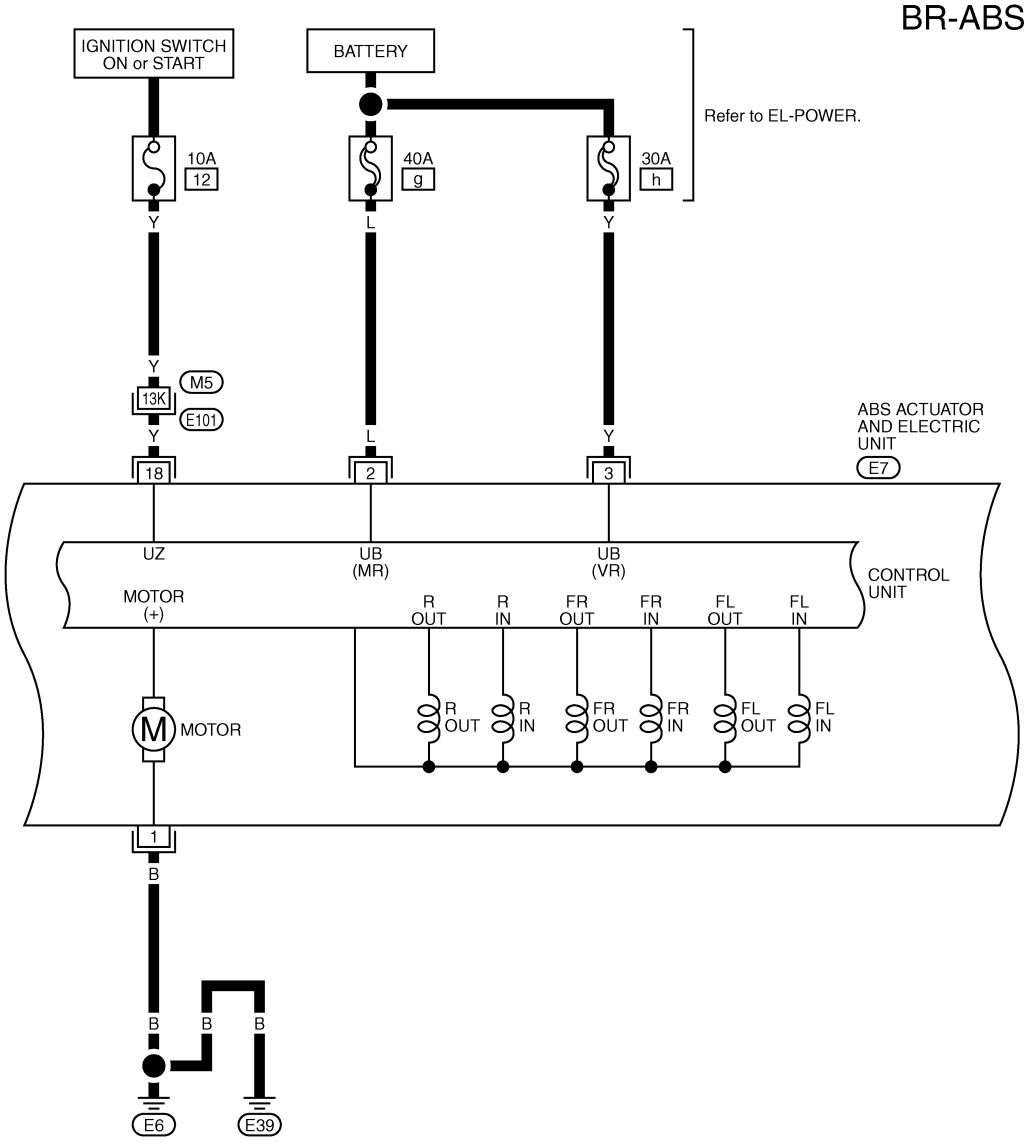

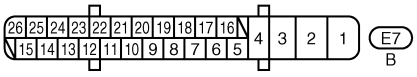

Refer to last page (Foldout page).
M5 , E101

JCFWM0489GE

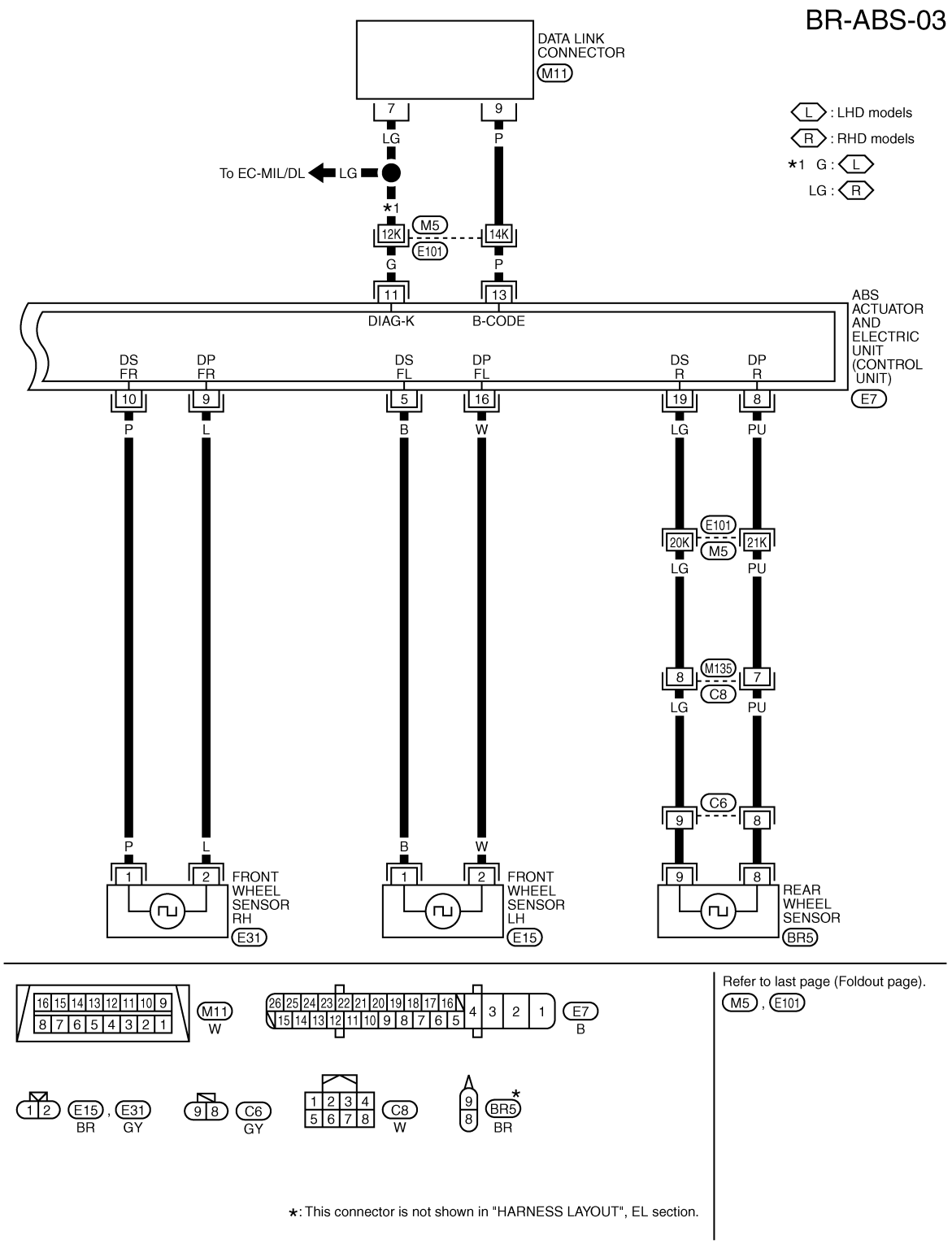

EXCEPT FOR EUROPE

For New Caledonia, Tahiti and Chili

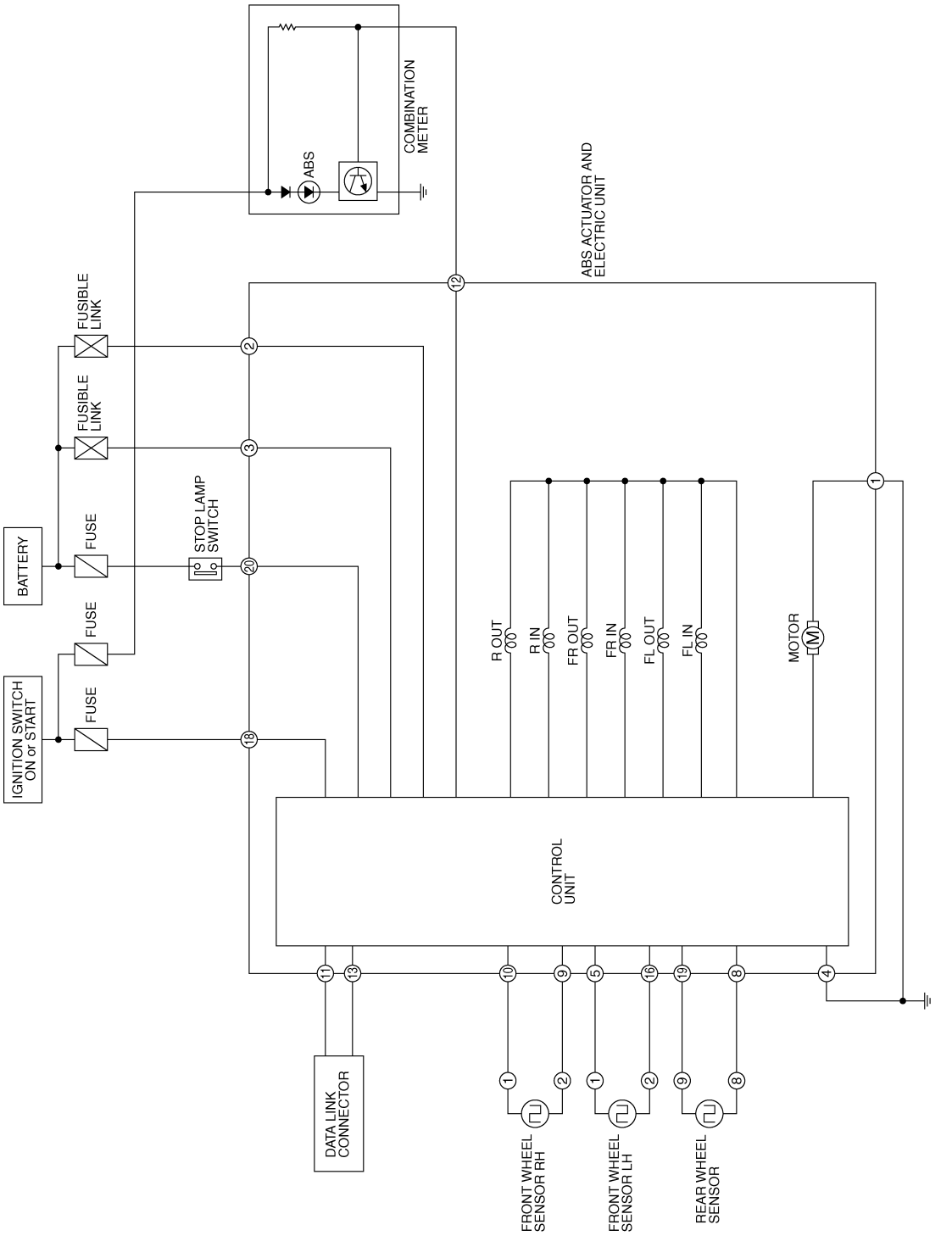
COMBINATION METER
ABS
ABS ACTUATOR AND ELECTRIC UNIT
FUSIBLE LINK
FUSIBLE LINK
FUSE
FUSE
FUSE
BATTERY
IGNITION SWITCH ON or START
STOP LAMP SWITCH
R OUT
R IN
FR OUT
FR IN
FL OUT
FL IN
MOTOR
CONTROL UNIT
DATA LINK CONNECTOR
FRONT WHEEL SENSOR RH
FRONT WHEEL SENSOR LH
REAR WHEEL SENSOR
JCFWM0458GE

BR-ABS-01

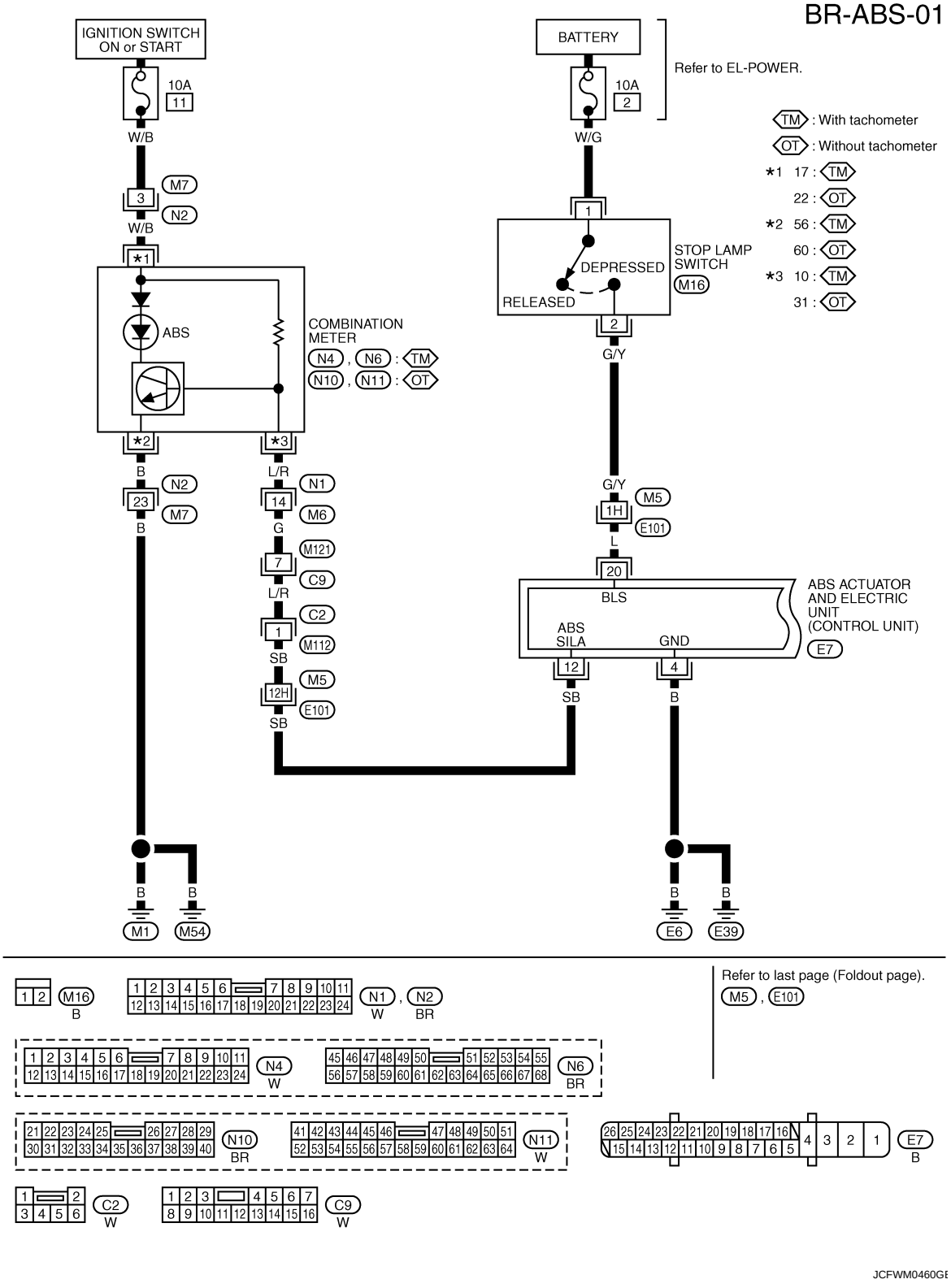
IGNITION SWITCH ON or START
10A
11
W/B
M7
3
N2
W/B
*1
ABS
COMBINATION METER
N4 , N6 : TM
N10 , N11 : OT
*2
*3
B
L/R
N2
23
M7
B
N1
14
M6
G
M121
7
C9
L/R
C2
1
M112
SB
M5
12H
E101
SB
BATTERY
10A
2
W/G
Refer to EL-POWER.
1
DEPRESSED
RELEASED
STOP LAMP SWITCH
M16
2
G/Y
G/Y
M5
1H
E101
L
20
BLS
ABS SILA
GND
ABS ACTUATOR AND ELECTRIC UNIT (CONTROL UNIT)
E7
12
4
SB
B
B
B
M1
M54
B
B
E6
E39
TM : With tachometer
OT : Without tachometer
*1 17 : TM
22 : OT
*2 56 : TM
60 : OT
*3 10 : TM
31 : OT
M16
B
N1 , N2
W BR
Refer to last page (Foldout page).
M5 , E101
N4
W
N6
BR
N10
BR
N11
W
E7
B
C2
W
C9
W
JCFWM0460GE

BR-ABS-02

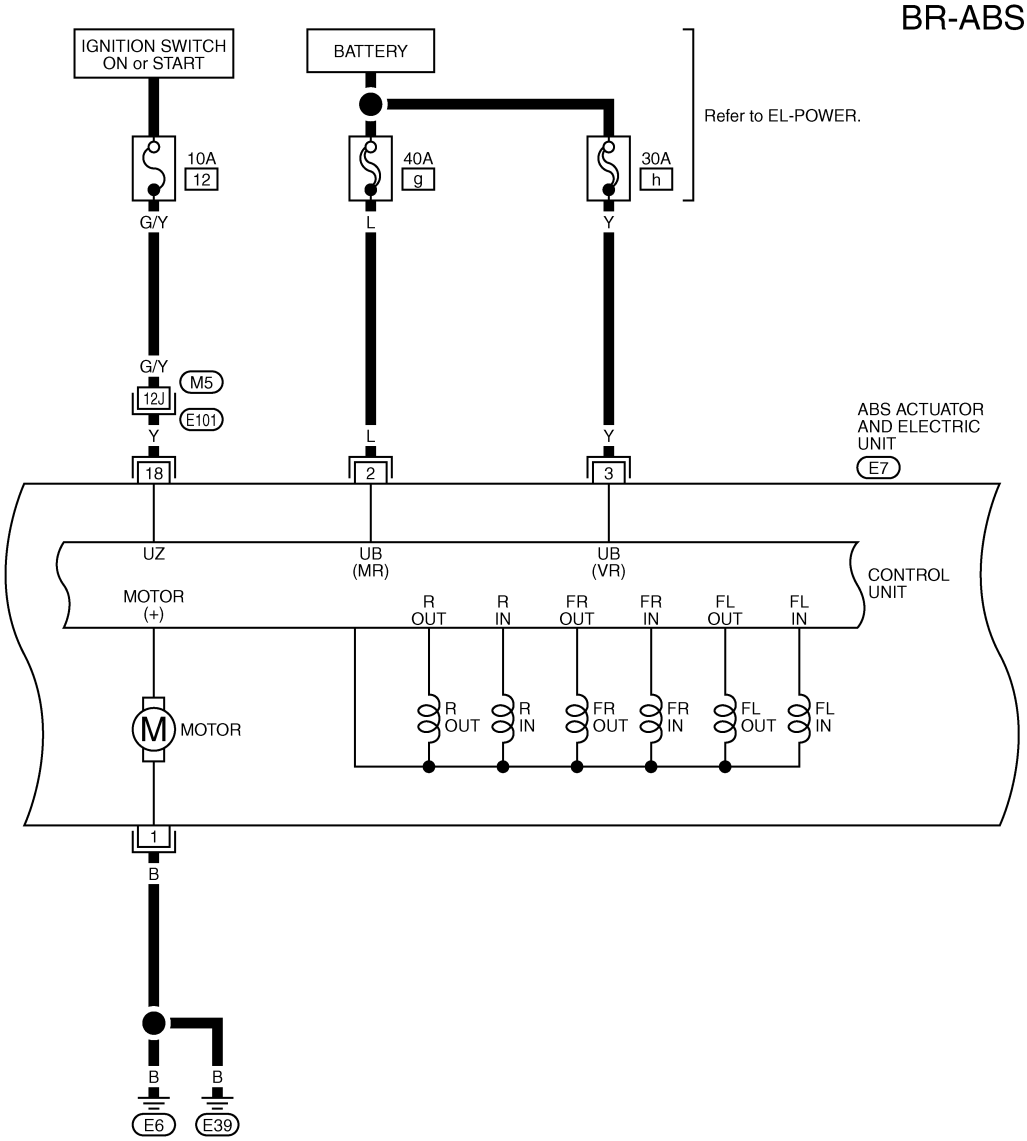

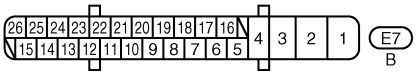

Refer to last page (Foldout page).
M5 , E101

JCFWM0461GE

BR-ABS-03

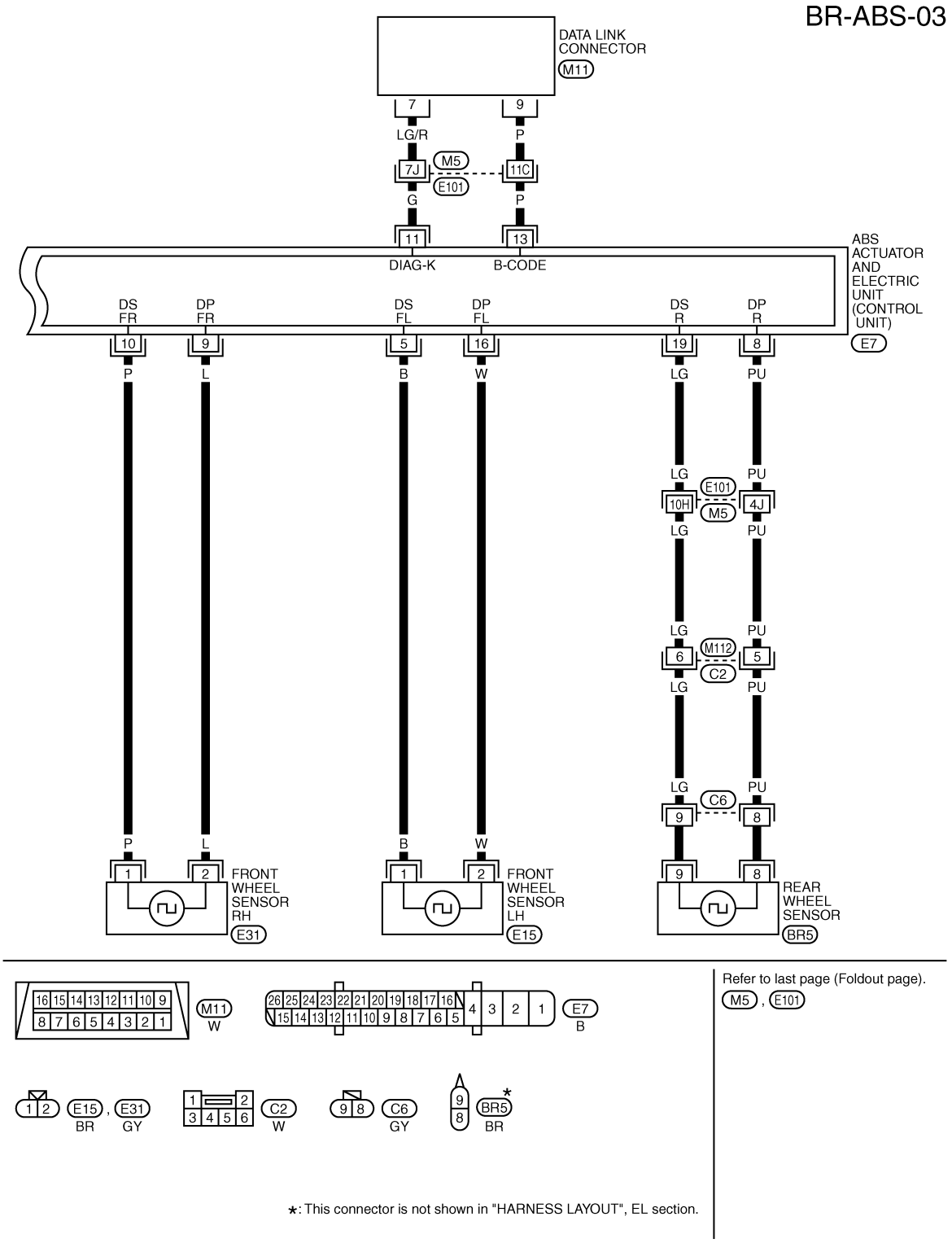

Except for New Caledonia, Tahiti and Chili

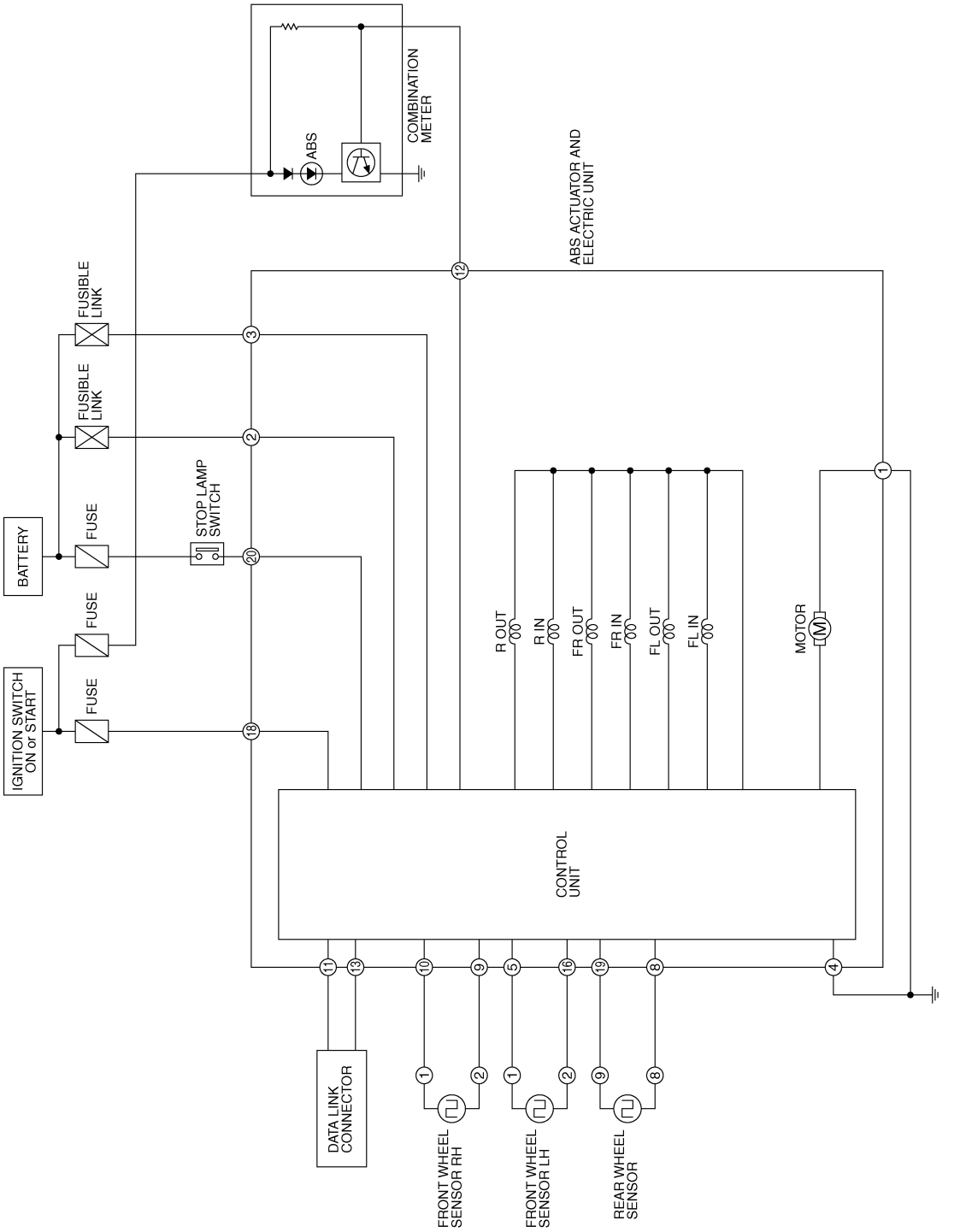

JCFWM0469GE

BR-ABS-01

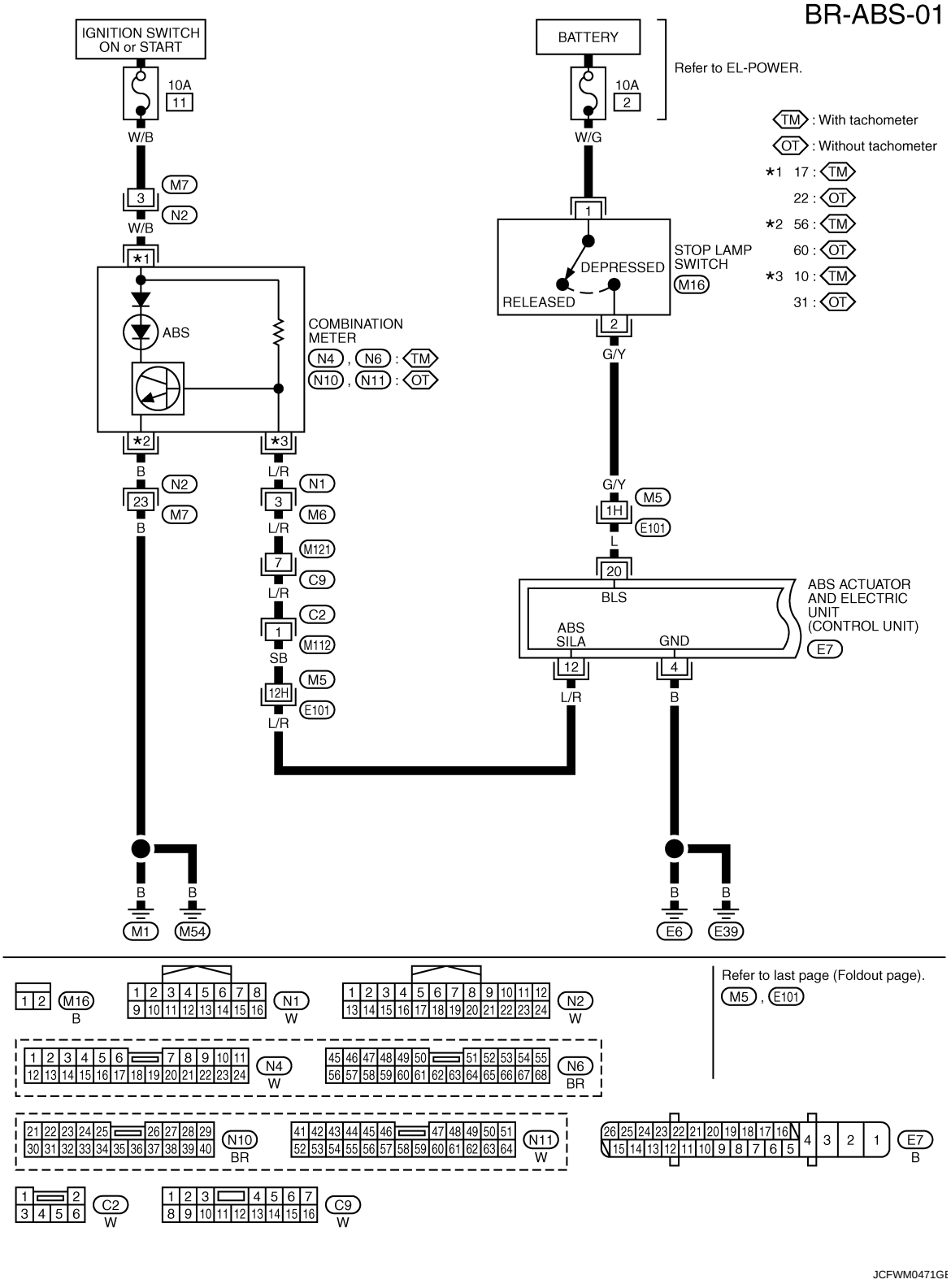
IGNITION SWITCH ON or START
10A 11
W/B
M7
3
N2
W/B
*1
ABS
COMBINATION METER
N4 , N6 : TM
N10 , N11 : OT
*2
*3
B
L/R
N2
23
M7
B
N1
3
M6
L/R
M121
7
C9
L/R
C2
1
M112
SB
M5
12H
E101
L/R
BATTERY
10A 2
W/G
Refer to EL-POWER.
1
DEPRESSED
RELEASED
STOP LAMP SWITCH
M16
2
G/Y
G/Y
M5
1H
E101
L
20
BLS
ABS SILA
GND
ABS ACTUATOR AND ELECTRIC UNIT (CONTROL UNIT)
E7
12
4
L/R
B
B
B
B
M1
M54
E6
E39
TM : With tachometer
OT : Without tachometer
*1 17 : TM
22 : OT
*2 56 : TM
60 : OT
*3 10 : TM
31 : OT
M16
B
N1
W
N2
W
Refer to last page (Foldout page).
M5 , E101
N4
W
N6
BR
N10
BR
N11
W
E7
B
C2
W
C9
W
JCFWM0471GE

BR-ABS-02

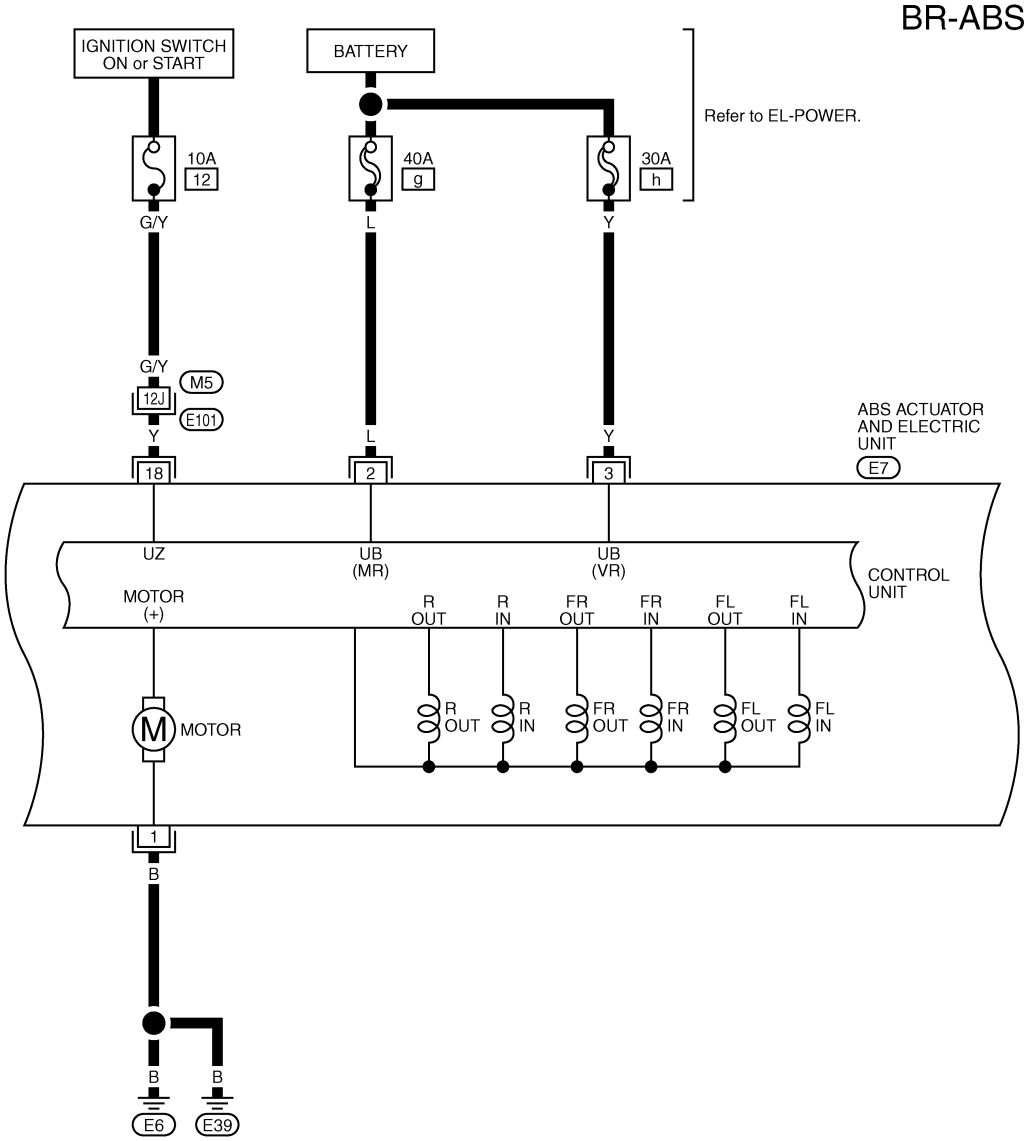

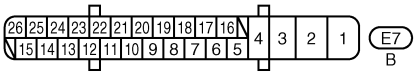

Refer to last page (Foldout page).
M5 , E101

JCFWM0472GE

BR-ABS-03

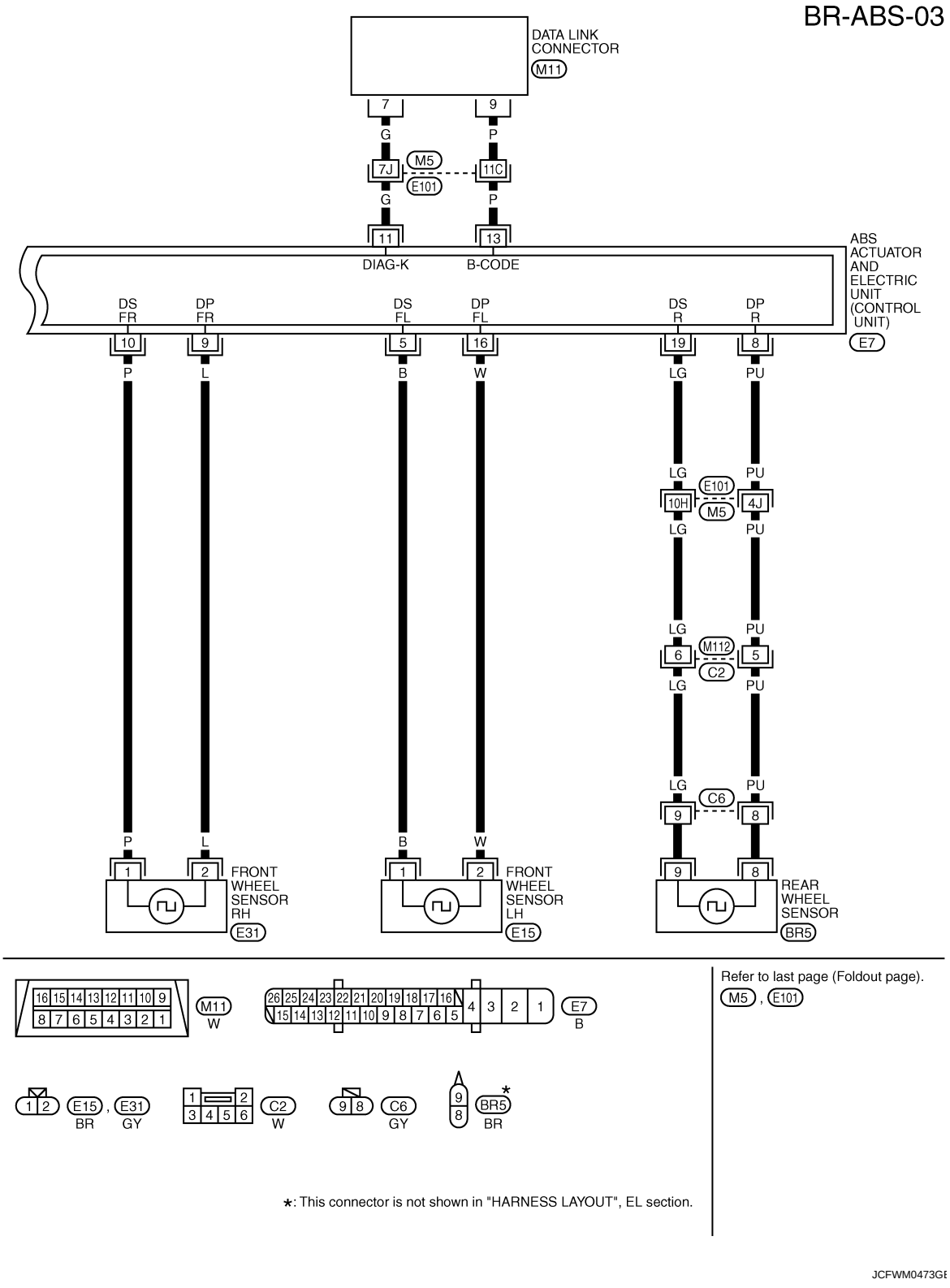
DATA LINK CONNECTOR
M11
7
9
G
P
M5
7J
11C
E101
G
P
11
13
DIAG-K
B-CODE
ABS ACTUATOR AND ELECTRIC UNIT (CONTROL UNIT)
E7
DS FR
DP FR
DS FL
DP FL
DS R
DP R
10
9
5
16
19
8
P
L
B
W
LG
PU
LG
PU
E101
10H
4J
M5
LG
PU
LG
PU
M112
6
5
C2
LG
PU
LG
PU
C6
9
8
P
L
B
W
1
2
FRONT WHEEL SENSOR RH
E31
1
2
FRONT WHEEL SENSOR LH
E15
9
8
REAR WHEEL SENSOR
BR5
16 15 14 13 12 11 10 9
8 7 6 5 4 3 2 1
M11
W
26 25 24 23 22 21 20 19 18 17 16
15 14 13 12 11 10 9 8 7 6 5
4 3 2 1
E7
B
1 2
E15 , E31
BR GY
1 2
3 4 5 6
C2
W
9 8
C6
GY
9
8
BR5
BR
*
*: This connector is not shown in "HARNESS LAYOUT", EL section.
Refer to last page (Foldout page).
M5 , E101
JCFWM0473GE

BR-ABS-07

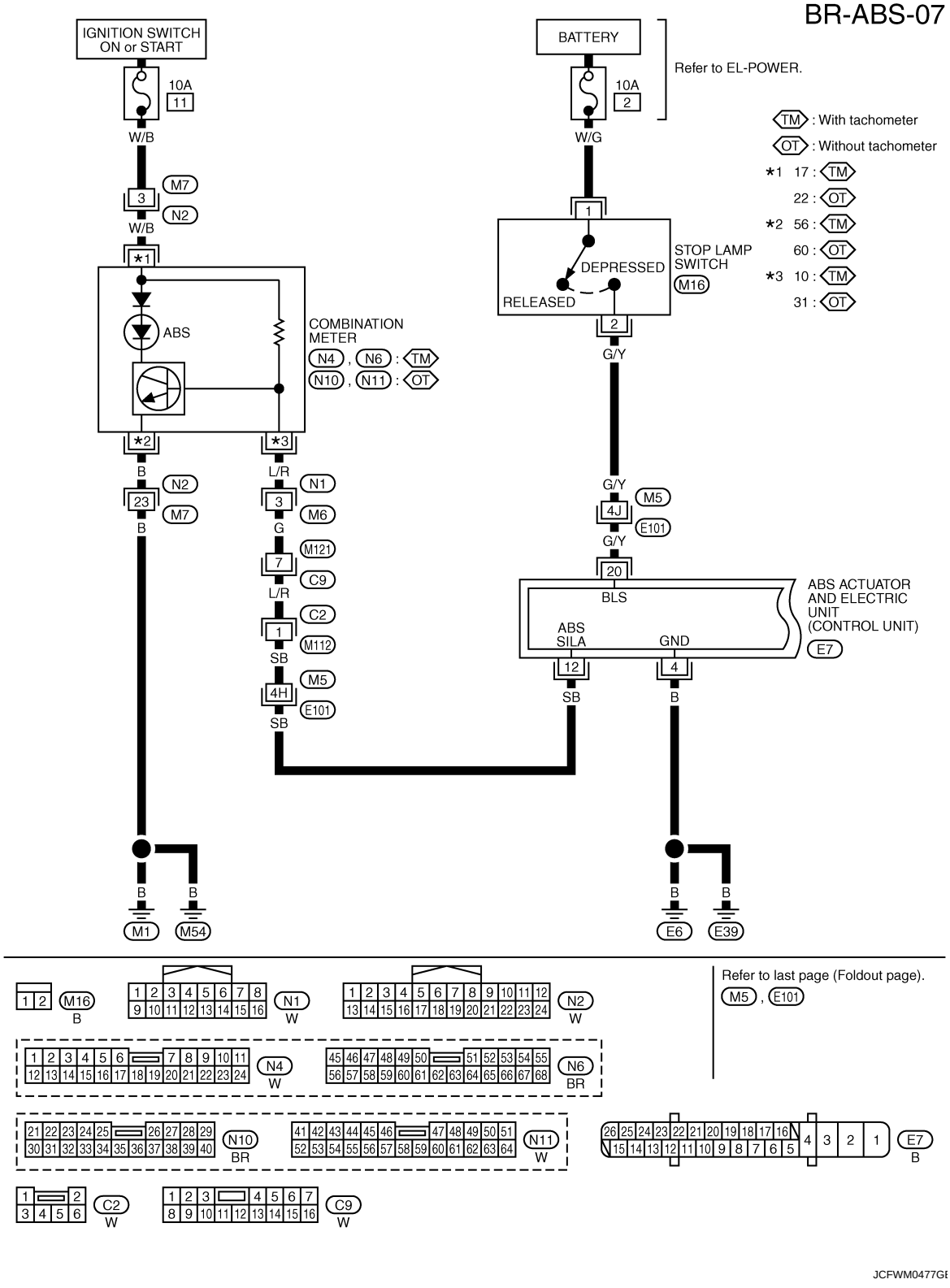
IGNITION SWITCH ON or START
10A
11
W/B
M7
3
N2
W/B
*1
ABS
COMBINATION METER
N4 , N6 : TM
N10 , N11 : OT
*2
*3
B
L/R
N2
23
M7
B
N1
3
M6
G
M121
7
C9
L/R
C2
1
M112
SB
M5
4H
E101
SB
BATTERY
10A
2
W/G
Refer to EL-POWER.
1
DEPRESSED
RELEASED
STOP LAMP SWITCH
M16
2
G/Y
G/Y
M5
4J
E101
G/Y
20
BLS
ABS SILA
GND
ABS ACTUATOR AND ELECTRIC UNIT (CONTROL UNIT)
E7
12
4
SB
B
B
B
M1
M54
B
B
E6
E39
TM : With tachometer
OT : Without tachometer
*1 17 : TM
22 : OT
*2 56 : TM
60 : OT
*3 10 : TM
31 : OT
M16
B
N1
W
N2
W
N4
W
N6
BR
N10
BR
N11
W
E7
B
C2
W
C9
W
Refer to last page (Foldout page).
M5 , E101
JCFWM0477GE

BR-ABS-08

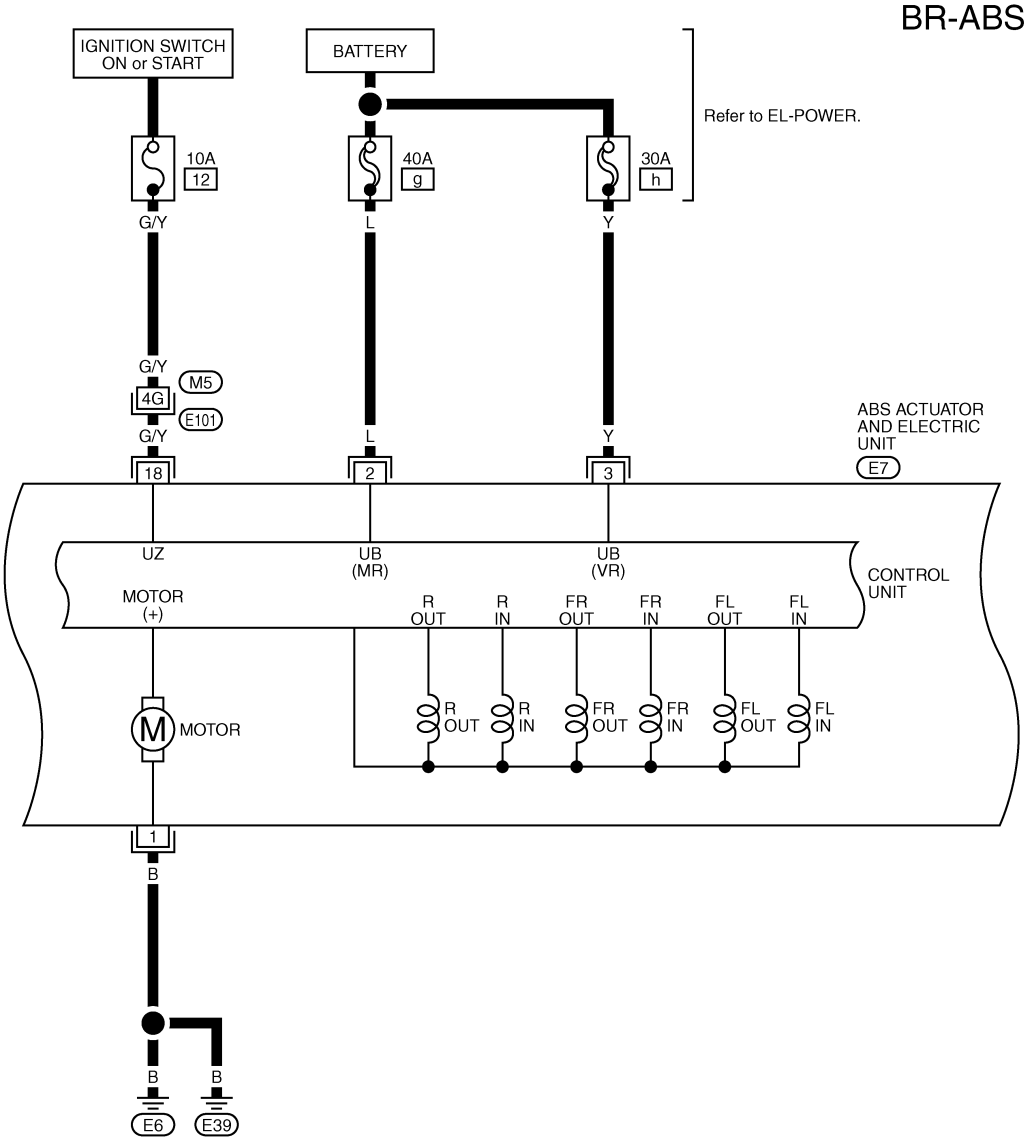

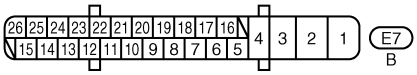

Refer to last page (Foldout page).
M5 , E101

JCFWM0478GE

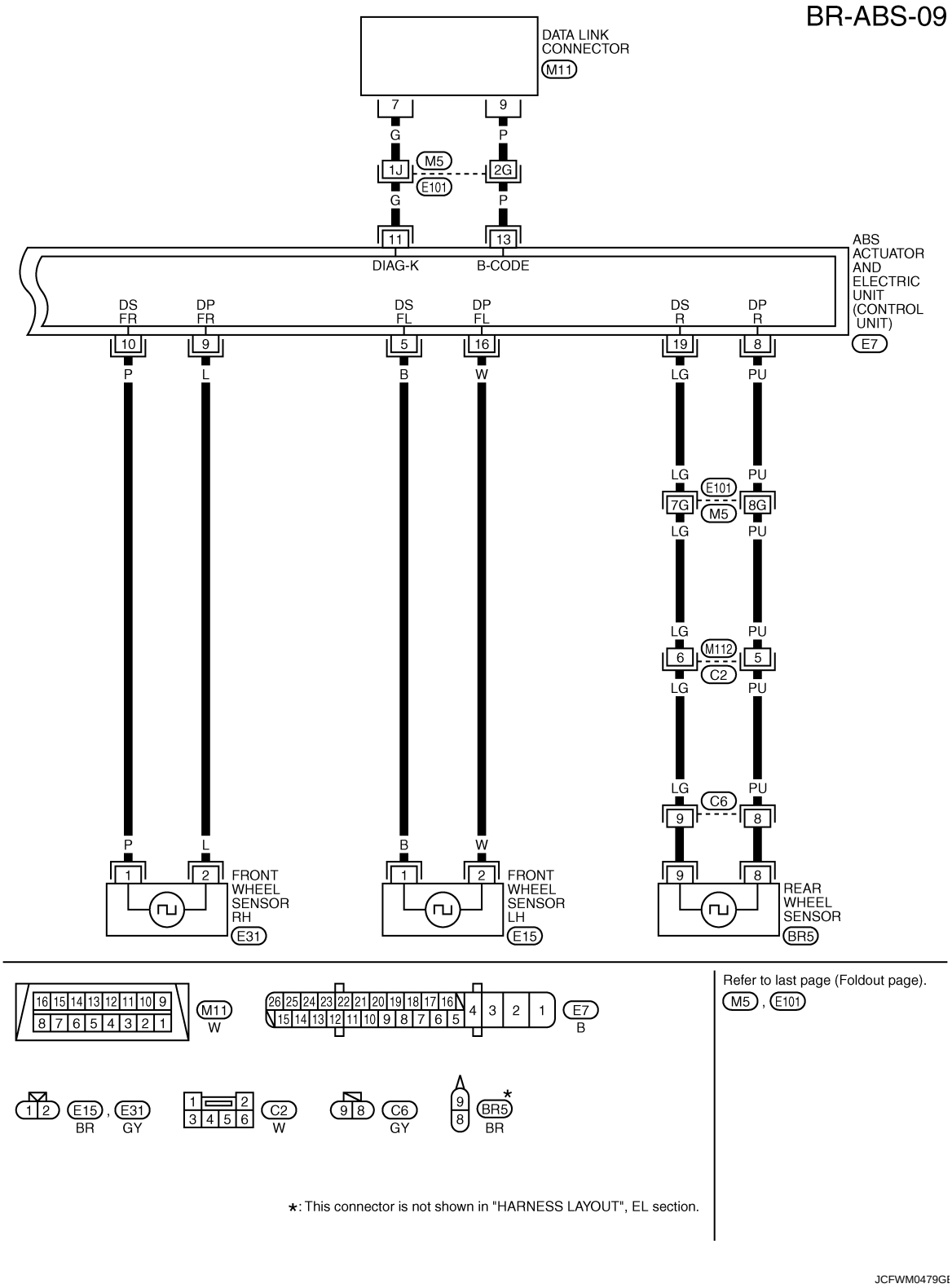

Control Unit Input/Output Signal Standard

INFOID:0000000005849112

REFERENCE VALUE FROM CONSULT-III

CAUTION:

Displayed item is data calculated by control unit. Therefore, it may indicate a normal value even if output circuit (harness) is open or shorted.

Monitor item	Display content	Data monitor.	
		Condition	Reference value in normal operation
FR LH SENSOR FR RH SENSOR RR SENSOR	Wheel speed	Vehicle stopped	0 [km/h (MPH)]
		Vehicle running (Note 1)	Nearly matches the speedometer display (± 10 % or less)
WARNING LAMP	ABS warning lamp status (Note 2)	When ABS warning lamp is ON	On
		When ABS warning lamp is OFF	Off
STOP LAMP SW	Brake pedal operation	Brake pedal depressed	On
		Brake pedal not depressed	Off
MOTOR RELAY	Motor and motor relay operation status	When the motor relay and motor are operating	On
		When the motor relay and motor are not operating	Off
ACTUATOR RLY	Actuator relay operation status	When the actuator relay is operating	On
		When the actuator relay is not operating	Off
FR LH IN SOL FR LH OUT SOL FR RH IN SOL FR RH OUT SOL REAR IN SOL REAR OUT SOL	Operation status of all solenoid valve	Actuator (solenoid valve) is active (“ACTIVE TEST” with CONSULT-III) or actuator relay is inactive (in fail-safe mode).	On
		When the actuator (solenoid valve) is not active and actuator relay is active (ignition switch ON).	Off
BATTERY VOLT	Battery voltage supplied to the ABS actuator and electric unit (control unit)	Ignition switch ON	10 - 16 V

Note 1: Confirm tire pressure is normal.

Note 2: ON/OFF timing of ABS warning lamp

ON: For approximately 1 second after ignition switch is turned ON, or when malfunction is detected.

OFF: Approximately 1 second after ignition switch is turned ON (When system is in normal operation.)

CONSULT-III Function

INFOID:0000000005849113

CONSULT-III MAIN FUNCTION

CONSULT-III can display each self-diagnostic item using the diagnostic test modes shown following.

Diagnostic test mode	Function
SELF-DIAG RESULTS	Self-diagnostic results can be read and erased quickly.
DATA MONITOR	Input/Output data in the ABS actuator and electric unit (control unit) can be read.
ACTIVE TEST	Diagnostic Test Mode in which CONSULT-III drives some actuators apart from the ABS actuator and electric unit (control unit) and also shifts some parameters in a specified range.
ECU PART NUMBER	ABS actuator and electric unit (control unit) part number can be read.

Self-Diagnosis

INFOID:0000000005849114

DISPLAY ITEM LIST

Suspect systems	Malfunction detecting condition	Check item
RR LH SENSOR-1* (Note) [C1102]	When the circuit in the rear wheel sensor is open.	• Check tire • Check sensor and sensor rotor • Check wheel sensor circuit
FR RH SENSOR-1 (Note) [C1103]	When the circuit in the front RH wheel sensor is open.	
FR LH SENSOR-1 (Note) [C1104]	When the circuit in the front LH wheel sensor is open.	
RR LH SENSOR-2* (Note) [C1106]	When the circuit in the rear wheel sensor is short-circuited. Or when the sensor power voltage is outside the standard. When the distance between the wheel sensor and sensor rotor is too large and the sensor pulse cannot be recognized by the control unit.	
FR RH SENSOR-2 (Note) [C1107]	When the circuit in the front RH wheel sensor is short-circuited. Or when the sensor power voltage is outside the standard. When the distance between the wheel sensor and sensor rotor is too large and the sensor pulse cannot be recognized by the control unit.	
FR LH SENSOR-2 (Note) [C1108]	When the circuit in the front LH wheel sensor is short-circuited. Or when the sensor power voltage is outside the standard. When the distance between the wheel sensor and sensor rotor is too large and the sensor pulse cannot be recognized by the control unit.	
ABS SENSOR [ABNORMAL SIGNAL] [C1115]	Wheel sensor input has generated a malfunction.	
BATTERY VOLTAGE [ABNORMAL] [C1109]	When the ABS actuator and electric unit (control unit) power voltage is lower than normal.	• Check battery voltage
CONTROLLER FAILURE [C1110]	When there is an internal malfunction in the ABS actuator and electric unit (control unit).	• Replace ABS actuator and electric unit (control unit)
STOP LAMP SW [C1116]	Stop lamp switch circuit is open.	• Check stop lamp switch • Check stop lamp switch circuit
PUMP MOTOR [C1111]	During actuator motor operation with ON, when actuator motor turns OFF or when control line for actuator motor relay is open.	• Check ABS actuator and electric unit (control unit)
MAIN RELAY [C1114]	When the control unit detects a malfunction in the actuator relay system.	
FR LH IN ABS SOL [C1120]	When the control unit detects a malfunction in the front left inlet solenoid system.	
FR LH OUT ABS SOL [C1121]	When the control unit detects a malfunction in the front left outlet solenoid system.	
FR RH IN ABS SOL [C1122]	When the control unit detects a malfunction in the front right inlet solenoid system.	
FR RH OUT ABS SOL [C1123]	When the control unit detects a malfunction in the front right outlet solenoid system.	
REAR IN ABS SOL [C1190]	When the control unit detects a malfunction in the rear inlet solenoid system.	
REAR OUT ABS SOL [C1191]	When the control unit detects a malfunction in the rear outlet solenoid system.	

*: Although “RR LH SENSOR-1” or “RR LH SENSOR-2” is indicated on the CONSULT-III screen, this means “rear wheel sensor”.

NOTE:

After completing repairs of shorted sensor circuit, when ignition switch is turned ON, ABS warning lamp turns ON. Check that ABS warning lamp turns OFF while driving vehicle at 30 km/h (19 MPH) or more for approximately 1 minute according to self-diagnosis procedure. In addition, if wheel sensor-2 is displayed for wheels, check wheel sensor circuit and also check control unit power voltage.

Data Monitor

INFOID:0000000005849115

DISPLAY ITEM LIST

×: Applicable ▼: Optional item

Item (Unit)	Monitor item selection		Remarks
	ECU INPUT SIGNALS	MAIN SIGNALS	
FR LH SENSOR [km/h (MPH)]	×	×	Displays wheel speed calculated by front LH wheel sensor signal.
FR RH SENSOR [km/h (MPH)]	×	×	Displays wheel speed calculated by front RH wheel sensor signal.
RR SENSOR [km/h (MPH)]	×	×	Displays wheel speed calculated by rear wheel sensor signal.
STOP LAMP SW (On/Off)	×	×	Displays operating condition (On/Off) of stop lamp switch (On/Off).
BATTERY VOLT (V)	×	×	Displays voltage supplied to ABS control unit.
FR LH IN SOL (On/Off)	▼	×	Displays operating condition (On/Off) of front LH ABS inlet solenoid.
FR LH OUT SOL (On/Off)	▼	×	Displays operating condition (On/Off) of front LH ABS outlet solenoid.
FR RH IN SOL (On/Off)	▼	×	Displays operating condition (On/Off) of front RH ABS inlet solenoid.
FR RH OUT SOL (On/Off)	▼	×	Displays operating condition (On/Off) of front RH ABS outlet solenoid.
REAR IN SOL (On/Off)	▼	×	Displays operating condition (On/Off) of rear ABS inlet solenoid.
REAR OUT SOL (On/Off)	▼	×	Displays operating condition (On/Off) of rear ABS outlet solenoid.
MOTOR RELAY (On/Off)	▼	×	Displays condition (On/Off) of ABS motor relay.
ACTUATOR RLY (On/Off)	▼	×	Displays condition (On/Off) of ABS actuator relay.
WARNING LAMP (On/Off)	▼	×	Displays ABS warning lamp control condition in control unit.
ABS SIGNAL (On/Off)	▼	▼	ABS operation
ABS FAIL SIG (On/Off)	▼	▼	ABS fail-safe signal

Active Test

INFOID:0000000005849116

TEST ITEM

Solenoid Valve

NOTE:

The example shown is for front right wheel. The procedure for the other wheels is the same as given below.

- For ABS solenoid valve, touch “Up”, “Keep”, and “Down” on the display screen. Make sure that solenoid valve operates as shown in solenoid valve operation chart.

Operation	ABS solenoid valve		
	Up	Keep	Down

FR RH IN SOL	Off	On	On
FR RH OUT SOL	Off	Off	On*

*: ON for 1 to 2 seconds after the touch, and then OFF

ABS motor
Touch “On” and “Off” on screen to check that ABS motor relay operates as shown in the following chart.

Operation	On	Off
MOTOR RELAY	On	Off
ACTUATOR RLY	On	On

Symptom Chart

INFOID:0000000005849117

If ABS warning lamp turn ON, perform self-diagnosis.

Symptom	Check item
Excessive ABS function operation frequency	Brake force distribution
	Looseness of front and rear axle
	Wheel sensor and sensor rotor system
Unexpected pedal reaction	Brake pedal stroke
	Make sure the braking force is sufficient when the ABS is not operating.
The braking distance is long	Check stopping distance when the ABS is not operating.
The ABS function does not operate	Wheel sensor
	The ABS does not operate when the speed 10 km/h (6 MPH) or less.
Pedal vibration or ABS operation sound occurs	Wheel sensor
	Under several conditions, when brake pedal is lightly depressed (just place a foot on it), ABS is activated and vibration is felt. However this is normal.
ABS warning lamp is not normal	ABS actuator and electric unit (control unit)
	Combination meter

C1102, C1103, C1104 WHEEL SENSOR

DTC Logic

INFOID:0000000005849118

DTC DETECTION LOGIC

DTC	Display item	Malfunction detected condition	Possible cause
C1102	RR LH SENSOR-1*	When the circuit in the rear wheel sensor is open.	• Harness or connector • Wheel sensor • ABS actuator and electric unit (control unit) • Sensor rotor
C1103	FR RH SENSOR-1	When the circuit in the front RH wheel sensor is open.	
C1104	FR LH SENSOR-1	When the circuit in the front LH wheel sensor is open.	

*: Although “RR LH SENSOR-1” is indicated on the CONSULT-III screen, this means “rear wheel sensor”.

DTC CONFIRMATION PROCEDURE

1. DTC REPRODUCTION PROCEDURE

1. Start the engine and drive the vehicle at 30 km/h (19 MPH) or more for approximately 1 minute.
2. Perform self-diagnosis for “ABS” with CONSULT-III.

Is DTC “C1102”, “C1103” or “C1104” detected?

YES >> Proceed to diagnosis procedure. Refer to BR-29, "Diagnosis Procedure".
NO >> INSPECTION END

Diagnosis Procedure

INFOID:0000000005849119

CAUTION:
Never check between wheel sensor harness connector terminals.

1. CHECK TIRES

Check air pressure, wear and size.

Is the inspection result normal?

YES >> GO TO 2.
NO >> Adjust air pressure or replace error-detected parts.

2. CHECK WHEEL SENSOR

Check wheel sensor for damage, disconnection or looseness.

Is the inspection result normal?

YES >> GO TO 3.
NO >> Repair wheel sensor mount or replace wheel sensor.

3. CHECK SENSOR ROTOR

Check sensor rotor for damage, disconnection or looseness.

Is the inspection result normal?

YES >> GO TO 4.
NO >> Repair wheel sensor mount or replace sensor rotor.

4. CHECK WHEEL SENSOR HARNESS

1. Check the continuity between ABS actuator and electric unit (control unit) harness connector and wheel sensor harness connector. (Also check continuity when steering wheel is turned right and left and when sensor harness inside the wheel house is moved.)

Measurement connector and terminal for power supply circuit

ABS actuator and electric unit (control unit)		Wheel sensor		Continuity
Connector	Terminal	Connector	Terminal	
E7	9	E31 (Front RH)	2	Existed
	16	E15 (Front LH)		
	8	BR5 (Rear)	8	

Measurement connector and terminal for signal circuit

ABS actuator and electric unit (control unit)		Wheel sensor		Continuity
Connector	Terminal	Connector	Terminal	
E7	10	E31 (Front RH)	1	Existed
	5	E15 (Front LH)		
	19	BR5 (Rear)	9	

2. Check the continuity between ABS actuator and electric unit (control unit) harness connector.

ABS actuator and electric unit (control unit)				Continuity
Connector	Terminal	Connector	Terminal	
E7	9,10	E7	1, 4	Not existed
	16, 5			
	8, 19			

Is the inspection result normal?

YES >> GO TO 5.
NO >> Repair or replace error-detected parts.

5. CHECK TERMINALS AND HARNESS CONNECTORS

1. Check ABS actuator and electric unit (control unit) pin terminals for damage or loose connection with harness connector.
2. Check each wheel sensor pin terminals for damage or loose connection with harness connector.

Is the inspection result normal?

YES >> GO TO 6.
NO >> Repair or replace error-detected parts.

6. REPLACE WHEEL SENSOR

1. Replace wheel sensor.
2. Erase self-diagnosis results for “ABS” with CONSULT-III.
3. Start the engine and drive the vehicle at 30 km/h (19 MPH) or more for approximately 1 minute.
4. Perform self-diagnosis for “ABS” with CONSULT-III.

Is DTC “C1102”, “C1103” or “C1104” detected?

YES >> Replace ABS actuator and electric unit (control unit). Refer to BR-48, "Exploded View"
NO >> INSPECTION END

C1106, C1107, C1108 WHEEL SENSOR

DTC Logic

INFOID:0000000005849120

DTC DETECTION LOGIC

DTC	Display item	Malfunction detected condition	Possible cause
C1106	RR LH SENSOR-2*	When the circuit in the rear wheel sensor is short-circuited. Or when the sensor power voltage is outside the standard. When the distance between the wheel sensor and sensor rotor is too large and the sensor pulse cannot be recognized by the control unit.	• Harness or connector • Wheel sensor • ABS actuator and electric unit (control unit) • Sensor rotor
C1107	FR RH SENSOR-2	When the circuit in the front RH wheel sensor is short-circuited. Or when the sensor power voltage is outside the standard. When the distance between the wheel sensor and sensor rotor is too large and the sensor pulse cannot be recognized by the control unit.	
C1108	FR LH SENSOR-2	When the circuit in the front LH wheel sensor is short-circuited. Or when the sensor power voltage is outside the standard. When the distance between the wheel sensor and sensor rotor is too large and the sensor pulse cannot be recognized by the control unit.	

*: Although “RR LH SENSOR-2” is indicated on the CONSULT-III screen, this means “rear wheel sensor”.

DTC CONFIRMATION PROCEDURE

1. DTC REPRODUCTION PROCEDURE

1. Start the engine and drive the vehicle at 30 km/h (19 MPH) or more for approximately 1 minute.
2. Perform self-diagnosis for “ABS” with CONSULT-III.

Is DTC “C1106”, “C1107” or “C1108” detected?

YES >> Proceed to diagnosis procedure. Refer to BR-31, "Diagnosis Procedure".
NO >> INSPECTION END

Diagnosis Procedure

INFOID:0000000005849121

CAUTION:
Never check between wheel sensor harness connector terminals.

1. CHECK TIRES

Check air pressure, wear and size.

Is the inspection result normal?

YES >> GO TO 2.
NO >> Adjust air pressure or replace error-detected parts.

2. CHECK WHEEL SENSOR

Check wheel sensor for damage, disconnection or looseness.

Is the inspection result normal?

YES >> GO TO 3.
NO >> Repair wheel sensor mount or replace wheel sensor.

3. CHECK SENSOR ROTOR

Check sensor rotor for damage, disconnection or looseness.

Is the inspection result normal?

YES >> GO TO 4.
NO >> Repair wheel sensor mount or replace sensor rotor.

4. CHECK WHEEL SENSOR HARNESS

1. Check the continuity between ABS actuator and electric unit (control unit) harness connector and wheel sensor harness connector. (Also check continuity when steering wheel is turned right and left and when sensor harness inside the wheel house is moved.)

Measurement connector and terminal for power supply circuit

ABS actuator and electric unit (control unit)		Wheel sensor		Continuity
Connector	Terminal	Connector	Terminal	
E7	9	E31 (Front RH)	2	Existed
	16	E15 (Front LH)		
	8	BR5 (Rear)	8	

Measurement connector and terminal for signal circuit

ABS actuator and electric unit (control unit)		Wheel sensor		Continuity
Connector	Terminal	Connector	Terminal	
E7	10	E31 (Front RH)	1	Existed
	5	E15 (Front LH)		
	19	BR5 (Rear)	9	

2. Check the continuity between ABS actuator and electric unit (control unit) harness connector.

ABS actuator and electric unit (control unit)				Continuity
Connector	Terminal	Connector	Terminal	
E7	9,10	E7	1, 4	Not existed
	16, 5			
	8, 19			

Is the inspection result normal?

YES >> GO TO 5.
NO >> Repair or replace error-detected parts.

5. CHECK TERMINALS AND HARNESS CONNECTORS

1. Check ABS actuator and electric unit (control unit) pin terminals for damage or loose connection with harness connector.
2. Check each wheel sensor pin terminals for damage or loose connection with harness connector.

Is the inspection result normal?

YES >> GO TO 6.
NO >> Repair or replace error-detected parts.

6. REPLACE WHEEL SENSOR

1. Replace wheel sensor.
2. Erase self-diagnosis results for “ABS” with CONSULT-III.
3. Start the engine and drive the vehicle at 30 km/h (19 MPH) or more for approximately 1 minute.
4. Perform self-diagnosis for “ABS” with CONSULT-III.

Is DTC “C1106”, “C1107” or “C1108” detected?

YES >> Replace ABS actuator and electric unit (control unit). Refer to BR-48, "Exploded View"
NO >> INSPECTION END

C1109 POWER AND GROUND SYSTEM

Description

INFOID:0000000005849122

Supplies electric power to the ABS actuator and electric unit (control unit).

DTC Logic

INFOID:0000000005849123

DTC DETECTION LOGIC

DTC	Display item	Malfunction detected condition	Possible cause
C1109	BATTERY VOLTAGE [ABNORMAL]	When the ABS actuator and electric unit (control unit) power voltage is lower than normal.	• Harness or connector • ABS actuator and electric unit (control unit) • Fuse

DTC CONFIRMATION PROCEDURE

1. DTC REPRODUCTION PROCEDURE

1. Turn the ignition switch ON.
2. Perform self-diagnosis for “ABS” with CONSULT-III.

Is DTC “C1109” detected?

YES >> Proceed to diagnosis procedure. Refer to BR-33, "Diagnosis Procedure".
NO >> INSPECTION END

Diagnosis Procedure

INFOID:0000000005849124

1. CHECK ABS ACTUATOR AND ELECTRIC UNIT (CONTROL UNIT) POWER SUPPLY

1. Turn the ignition switch OFF.
2. Disconnect ABS actuator and electric unit (control unit) harness connector.
3. Check the voltage between ABS actuator and electric unit (control unit) harness connector and ground.

ABS actuator and electric unit (control unit)		—	Voltage
Connector	Terminal		
E7	18	Ground	Approx. 0 V

4. Turn the ignition switch ON.
   CAUTION:
   Never start the engine.
5. Check the voltage between ABS actuator and electric unit (control unit) harness connector and ground.

ABS actuator and electric unit (control unit)		—	Voltage
Connector	Terminal		
E7	18	Ground	Battery voltage

Is the inspection result normal?

YES >> GO TO 4.
NO >> GO TO 2.

2. CHECK ABS ACTUATOR AND ELECTRIC UNIT (CONTROL UNIT) POWER SUPPLY CIRCUIT

1. Turn the ignition switch OFF.
2. Check 10 A fuse (#11 and #12).

Is the inspection result normal?

YES >> Perform the trouble diagnosis for ignition power supply circuit.
NO >> GO TO 3.

3. CHECK COMBINATION METER CIRCUIT

1. Disconnect combination meter harness connector.

2. Check continuity between ABS actuator and electric unit (control unit) harness connector and combination meter harness connector.

ABS actuator and electric unit (control unit)		Combination meter		Continuity
Connector	Terminal	Connector	Terminal	
E7	12	N18*1 N4*2 N10*3	54*1 10*2 31*3	Existed

*1: For Europe and Russia
*2: Except for Europe and Russia with tachometer
*3: Except for Europe and Russia without tachometer

Is the inspection result normal?

YES >> Perform the trouble diagnosis for combination meter.
NO >> Repair or replace error-detected parts.

4. CHECK ABS ACTUATOR AND ELECTRIC UNIT (CONTROL UNIT) GROUND

Check continuity between ABS actuator and electric unit (control unit) harness connector and ground.

ABS actuator and electric unit (control unit)		—	Continuity
Connector	Terminal		
E7	1	Ground	Existed
	4		

Is the inspection result normal?

YES >> GO TO 5.
NO >> Repair or replace error-detected parts.

5. CHECK TERMINALS AND HARNESS CONNECTORS

Check ABS actuator and electric unit (control unit) pin terminals for damage or loose connection with harness connector.

Is the inspection result normal?

YES >> Replace ABS actuator electric unit (control unit). Refer to BR-48, "Exploded View".
NO >> Repair or replace error-detected parts.

C1110 ABS ACTUATOR AND ELECTRIC UNIT (CONTROL UNIT)

DTC Logic

INFOID:0000000005849125

DTC DETECTION LOGIC

DTC	Display item	Malfunction detected condition	Possible cause
C1110	CONTROLLER FAILURE	When there is an internal malfunction in the ABS actuator and electric unit (control unit).	ABS actuator and electric unit (control unit)

DTC CONFIRMATION PROCEDURE

1. DTC REPRODUCTION PROCEDURE

1. Turn the ignition switch ON.
2. Perform self-diagnosis for “ABS” with CONSULT-III.

Is DTC “C1110” detected?

YES >> Proceed to diagnosis procedure. Refer to BR-35, "Diagnosis Procedure".
NO >> INSPECTION END

Diagnosis Procedure

INFOID:0000000005849126

1. REPLACE ABS ACTUATOR AND ELECTRIC UNIT (CONTROL UNIT)

CAUTION:
Replace ABS actuator and electric unit (control unit) when self-diagnostic result shows items other than those applicable.

>> Replace ABS actuator and electric unit (control unit). Refer to BR-48, "Exploded View".

C1111 ABS MOTOR, MOTOR RELAY SYSTEM

DTC Logic

INFOID:0000000005849127

DTC DETECTION LOGIC

DTC	Display item	Malfunction detected condition	Possible cause
C1111	PUMP MOTOR	During actuator motor operation with ON, when actuator motor turns OFF or when control line for actuator motor relay is open.	• Harness or connector • ABS actuator and electric unit (control unit)

DTC CONFIRMATION PROCEDURE

1. DTC REPRODUCTION PROCEDURE

1. Turn the ignition switch ON.
2. Perform self-diagnosis for “ABS” with CONSULT-III.

Is DTC “C1111” detected?

YES >> Proceed to diagnosis procedure. Refer to BR-36, "Diagnosis Procedure".
NO >> INSPECTION END

Diagnosis Procedure

INFOID:0000000005849128

1. CHECK ABS MOTOR AND MOTOR RELAY POWER SUPPLY

1. Turn the ignition switch OFF.
2. Disconnect ABS actuator and electric unit (control unit) harness connector.
3. Check the 40 A fuse (g).
4. Check voltage between the ABS actuator and electric unit (control unit) harness connector and ground.

ABS actuator and electric unit (control unit)		—	Voltage
Connector	Terminal		
E7	2	Ground	Battery voltage

Is the inspection result normal?

YES >> GO TO 2.
NO >> Repair or replace error-detected parts.

2. CHECK ABS ACTUATOR AND ELECTRIC UNIT (CONTROL UNIT) GROUND

Check continuity between ABS actuator and electric unit (control unit) harness connector and ground.

ABS actuator and electric unit (control unit)		—	Continuity
Connector	Terminal		
E7	1	Ground	Existed
	4		

Is the inspection result normal?

YES >> GO TO 3.
NO >> Repair or replace error-detected parts.

3. CHECK TERMINALS AND HARNESS CONNECTOR

Check ABS actuator and electric unit (control unit) pin terminals for damage or loose connection with harness connector.

Is the inspection result normal?

YES >> Replace ABS actuator and electric unit (control unit). Refer to BR-48, "Exploded View".
NO >> Repair or replace error-detected parts.

C1114 ACTUATOR RELAY SYSTEM

DTC Logic

INFOID:0000000005849129

DTC DETECTION LOGIC

DTC	Display item	Malfunction detected condition	Possible cause
C1114	ACTUATOR RLY	When the control unit detects a malfunction in the actuator relay system.	• Harness or connector • ABS actuator and electric unit (control unit)

DTC CONFIRMATION PROCEDURE

1. DTC REPRODUCTION PROCEDURE

1. Turn the ignition switch ON.
2. Perform self-diagnosis for “ABS” with CONSULT-III.

Is DTC “C1114” detected?

YES >> Proceed to diagnosis procedure. Refer to BR-37, "Diagnosis Procedure".
NO >> INSPECTION END

Diagnosis Procedure

INFOID:0000000005849130

1. CHECK ACTUATOR RELAY POWER SUPPLY

1. Turn the ignition switch OFF.
2. Disconnect ABS actuator and electric unit (control unit) harness connector.
3. Check the 30 A fuse (h).
4. Check voltage between ABS actuator and electric unit (control unit) harness connector and ground.

ABS actuator and electric unit (control unit)		—	Voltage
Connector	Terminal		
E7	3	Ground	Battery voltage

Is the inspection result normal?

YES >> GO TO 2.
NO >> Repair or replace error-detected parts.

2. CHECK ACTUATOR RELAY GROUND

Check continuity between ABS actuator and electric unit (control unit) harness connector and ground.

ABS actuator and electric unit (control unit)		—	Continuity
Connector	Terminal		
E7	1	Ground	Existed
	4		

Is the inspection result normal?

YES >> GO TO 3.
NO >> Repair or replace error-detected parts.

3. CHECK TERMINALS AND HARNESS CONNECTOR

Check ABS actuator and electric unit (control unit) pin terminals for damage or loose connection with harness connector.

Is the inspection result normal?

YES >> Replace ABS actuator and electric unit (control unit). Refer to BR-48, "Exploded View".
NO >> Repair or replace error-detected parts.

C1115 WHEEL SENSOR

DTC Logic

INFOID:0000000005849131

DTC DETECTION LOGIC

DTC	Display item	Malfunction detected condition	Possible cause
C1115	ABS SENSOR [ABNORMAL SIGNAL]	Wheel sensor input has generated a malfunction.	• Harness or connector • Wheel sensor • ABS actuator and electric unit (control unit) • Sensor rotor

DTC CONFIRMATION PROCEDURE

1. DTC REPRODUCTION PROCEDURE

1. Start the engine and drive the vehicle at 30 km/h (19 MPH) or more for approximately 1 minute.
2. Perform self-diagnosis for “ABS” with CONSULT-III.

Is DTC “C1115” detected?

YES >> Proceed to diagnosis procedure. Refer to BR-38, "Diagnosis Procedure".
NO >> INSPECTION END

Diagnosis Procedure

INFOID:0000000005849132

CAUTION:
Never check between wheel sensor harness connector terminals.

1. CHECK TIRES

Check air pressure, wear and size.

Is the inspection result normal?

YES >> GO TO 2.
NO >> Adjust air pressure or replace error-detected parts.

2. CHECK WHEEL SENSOR

Check wheel sensor for damage, disconnection or looseness.

Is the inspection result normal?

YES >> GO TO 3.
NO >> Repair wheel sensor mount or replace wheel sensor.

3. CHECK SENSOR ROTOR

Check sensor rotor for damage, disconnection or looseness.

Is the inspection result normal?

YES >> GO TO 4.
NO >> Repair wheel sensor mount or replace sensor rotor.

4. CHECK WHEEL SENSOR HARNESS

1. Check the continuity between ABS actuator and electric unit (control unit) harness connector and wheel sensor harness connector. (Also check continuity when steering wheel is turned right and left and when sensor harness inside the wheel house is moved.)

Measurement connector and terminal for power supply circuit

ABS actuator and electric unit (control unit)		Wheel sensor		Continuity
Connector	Terminal	Connector	Terminal	
E7	9	E31 (Front RH)	2	Existed
	16	E15 (Front LH)		
	8	BR5 (Rear)	8	

Measurement connector and terminal for signal circuit

ABS actuator and electric unit (control unit)		Wheel sensor		Continuity
Connector	Terminal	Connector	Terminal	
E7	10	E31 (Front RH)	1	Existed
	5	E15 (Front LH)		
	19	BR5 (Rear)	9	

2. Check the continuity between ABS actuator and electric unit (control unit) harness connector.

ABS actuator and electric unit (control unit)				Continuity
Connector	Terminal	Connector	Terminal	
E7	9,10	E7	1, 4	Not existed
	16, 5			
	8, 19			

Is the inspection result normal?

YES >> GO TO 5.
NO >> Repair or replace error-detected parts.

5. CHECK TERMINALS AND HARNESS CONNECTORS

1. Check ABS actuator and electric unit (control unit) pin terminals for damage or loose connection with harness connector.
2. Check each wheel sensor pin terminals for damage or loose connection with harness connector.

Is the inspection result normal?

YES >> GO TO 6.
NO >> Repair or replace error-detected parts.

6. REPLACE WHEEL SENSOR

1. Replace wheel sensor.
2. Erase self-diagnosis results for “ABS” with CONSULT-III.
3. Start the engine and drive the vehicle at 30 km/h (19 MPH) or more for approximately 1 minute.
4. Perform self-diagnosis for “ABS” with CONSULT-III.

Is DTC “C1115” detected?

YES >> Replace ABS actuator and electric unit (control unit). Refer to BR-48, "Exploded View"
NO >> INSPECTION END

C1116 STOP LAMP SWITCH

DTC Logic

INFOID:0000000005849133

DTC DETECTION LOGIC

DTC	Display item	Malfunction detected condition	Possible cause
C1116	STOP LAMP SW	When a stop lamp switch signal is not input where the brake pedal is depressed.	• Harness or connector • Stop lamp switch • ABS actuator and electric unit (control unit)

DTC CONFIRMATION PROCEDURE

1. DTC REPRODUCTION PROCEDURE

1. Turn the ignition switch ON.
2. Perform self-diagnosis for “ABS” with CONSULT-III.

Is DTC “C1116” detected?

YES >> Proceed to diagnosis procedure. Refer to BR-40, "Diagnosis Procedure".
NO >> INSPECTION END

Diagnosis Procedure

INFOID:0000000005849134

1. CHECK CONNECTOR

1. Turn the ignition switch OFF.
2. Disconnect ABS actuator and electric unit (control unit) harness connector.
3. Disconnect stop lamp switch harness connector.
4. Check terminal for deformation, disconnection, looseness, etc.
5. Reconnect ABS actuator and electric unit (control unit) and stop lamp switch connectors securely.
6. Start the engine.
7. Repeat pumping brake pedal carefully several times, and perform self-diagnosis for “ABS” with CONSULT-III.

Is the inspection result normal?

YES >> GO TO 2.
NO >> Poor connection of connector terminal. Repair or replace error-detected parts.

2. CHECK STOP LAMP SWITCH CLEARANCE

Check stop lamp switch clearance.

Is the inspection result normal?

YES >> GO TO 3.
NO >> Adjust stop lamp clearance.

3. CHECK STOP LAMP SWITCH SIGNAL

1. Turn the ignition switch OFF.
2. Disconnect ABS actuator and electric unit (control unit) harness connector.
3. Check voltage between ABS actuator and electric unit (control unit) harness connector and ground.

ABS actuator and electric unit (control unit)		Condition	Voltage
Connector	Terminal		
E7	20	Brake pedal is depressed	Battery voltage
		Brake pedal is released	Approx. 0 V

Is the inspection result normal?

YES >> Replace ABS actuator and electric unit (control unit). Refer to BR-48, "Exploded View".
NO >> GO TO 4.

4. CHECK STOP LAMP SWITCH

Check stop lamp switch. Refer to BR-90, "Component Inspection".

Is the inspection result normal?

YES >> GO TO 5.
NO >> Repair stop lamp switch.

5. CHECK STOP LAMP SWITCH CIRCUIT (1)

1. Check continuity between ABS actuator electric unit (control unit) harness connector and stop lamp switch harness connector.

ABS actuator electric unit (control unit)		Stop lamp switch		Continuity
Connector	Terminal	Connector	Terminal	Existed
E7	20	M16	2	

2. Check continuity between ABS actuator electric unit (control unit) harness connector and ground.

ABS actuator electric unit (control unit)		—	Continuity
Connector	Terminal		
E7	20	Ground	No existed

Is the inspection result normal?

YES >> GO TO 6.
NO >> Repair or replace error-detected parts.

6. CHECK STOP LAMP SWITCH CIRCUIT (2)

1. Check voltage between stop lamp switch harness connector and ground.

Stop lamp switch		—	Voltage
Connector	Terminal		
M16	1	Ground	Battery voltage

Is the inspection result normal?

YES >> Perform the trouble diagnosis for power supply circuit.
NO >> Repair or replace error-detected parts.

Component Inspection

INFOID:0000000005849135

1. CHECK STOP LAMP SWITCH

1. Turn the ignition switch OFF.
2. Disconnect stop lamp switch harness connector.
3. Check continuity between stop lamp switch harness connector terminals.

Stop lamp switch	Condition	Continuity
Terminal		
1 – 2	When brake pedal is depressed.	Existed
	When brake pedal is released.	Not existed

Is the inspection result normal?

YES >> INSPECTION END
NO >> Replace stop lamp switch.

C1120, C1122, C1190 IN ABS SOL

DTC Logic

INFOID:0000000005849136

DTC DETECTION LOGIC

DTC	Display item	Malfunction detected condition	Possible cause
C1120	FR LH IN ABS SOL	When the control unit detects a malfunction in the front left inlet solenoid system.	• Harness or connector • ABS actuator and electric unit (control unit)
C1122	FR RH IN ABS SOL	When the control unit detects a malfunction in the front right inlet solenoid system.	
C1190	REAR IN ABS SOL	When the control unit detects a malfunction in the rear inlet solenoid system.	

DTC CONFIRMATION PROCEDURE

1. DTC REPRODUCTION PROCEDURE

1. Turn the ignition switch ON.
2. Perform self-diagnosis for “ABS” with CONSULT-III.

Is DTC “C1120”, “C1122” or “C1190” detected?

YES >> Proceed to diagnosis procedure. Refer to BR-42, "Diagnosis Procedure".
NO >> INSPECTION END

Diagnosis Procedure

INFOID:0000000005849137

1. CHECK SOLENOID POWER SUPPLY

1. Turn the ignition switch OFF.
2. Disconnect ABS actuator and electric unit (control unit) harness connector.
3. Check the 30 A fuse (h).
4. Check voltage between ABS actuator and electric unit (control unit) harness connector and ground.

ABS actuator and electric unit (control unit)		—	Voltage
Connector	Terminal		
E7	3	Ground	Battery voltage

Is the inspection result normal?

YES >> GO TO 2.
NO >> Repair or replace error-detected parts.

2. CHECK SOLENOID GROUND

Check continuity between ABS actuator and electric unit (control unit) harness connector and ground.

ABS actuator and electric unit (control unit)		—	Continuity
Connector	Terminal		
E7	1	Ground	Existed
	4		

Is the inspection result normal?

YES >> GO TO 3.
NO >> Repair or replace error-detected parts.

3. CHECK TERMINALS AND HARNESS CONNECTOR

Check ABS actuator and electric unit (control unit) pin terminals for damage or loose connection with harness connector.

Is the inspection result normal?

YES >> Replace ABS actuator and electric unit (control unit). Refer to BR-48, "Exploded View".

NO >> Repair or replace error-detected parts.

C1121, C1123, C1191 OUT ABS SOL

DTC Logic

INFOID:0000000005849138

DTC DETECTION LOGIC

DTC	Display item	Malfunction detected condition	Possible cause
C1121	FR LH OUT ABS SOL	When the control unit detects a malfunction in the front left outlet solenoid system.	• Harness or connector • ABS actuator and electric unit (control unit)
C1123	FR RH OUT ABS SOL	When the control unit detects a malfunction in the front right outlet solenoid system.	
C1191	RR LH OUT ABS SOL	When the control unit detects a malfunction in the rear outlet solenoid system.	

DTC CONFIRMATION PROCEDURE

1. DTC REPRODUCTION PROCEDURE

1. Turn the ignition switch ON.
2. Perform self-diagnosis for “ABS” with CONSULT-III.

Is DTC “C1121”, “C1123” or “C1191” detected?

YES >> Proceed to diagnosis procedure. Refer to BR-44, "Diagnosis Procedure".
NO >> INSPECTION END

Diagnosis Procedure

INFOID:0000000005849139

1. CHECK SOLENOID POWER SUPPLY

1. Turn the ignition switch OFF.
2. Disconnect ABS actuator and electric unit (control unit) harness connector.
3. Check the 30 A fuse (h).
4. Check voltage between ABS actuator and electric unit (control unit) harness connector and ground.

ABS actuator and electric unit (control unit)		—	Voltage
Connector	Terminal		
E7	3	Ground	Battery voltage

Is the inspection result normal?

YES >> GO TO 2.
NO >> Repair or replace error-detected parts.

2. CHECK SOLENOID GROUND

Check continuity between ABS actuator and electric unit (control unit) harness connector and ground.

ABS actuator and electric unit (control unit)		—	Continuity
Connector	Terminal		
E7	1	Ground	Existed
	4		

Is the inspection result normal?

YES >> GO TO 3.
NO >> Repair or replace error-detected parts.

3. CHECK TERMINALS AND HARNESS CONNECTOR

Check ABS actuator and electric unit (control unit) pin terminals for damage or loose connection with harness connector.

Is the inspection result normal?

YES >> Replace ABS actuator and electric unit (control unit). Refer to BR-48, "Exploded View".

NO >> Repair or replace error-detected parts.

WHEEL SENSOR

Exploded View

INFOID:0000000005849140

FRONT

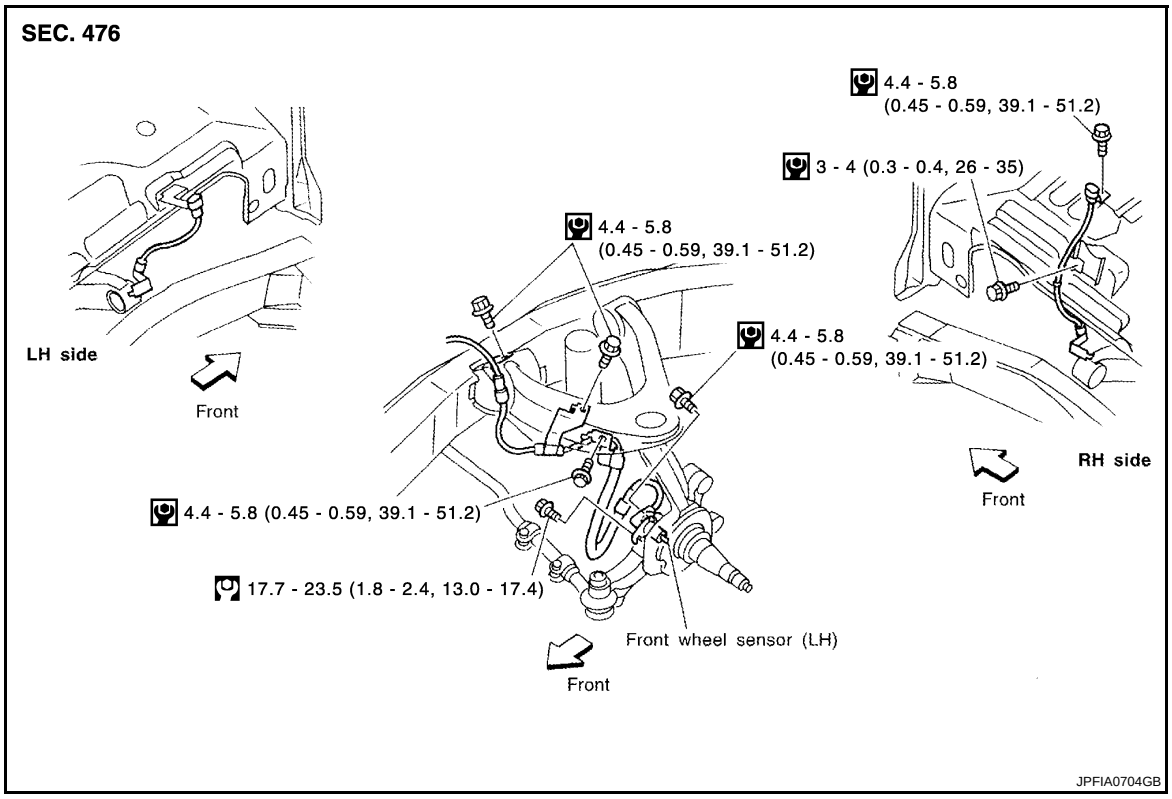

: N·m (kg-m, ft-lb)

: N·m (kg-m, in-lb)

REAR

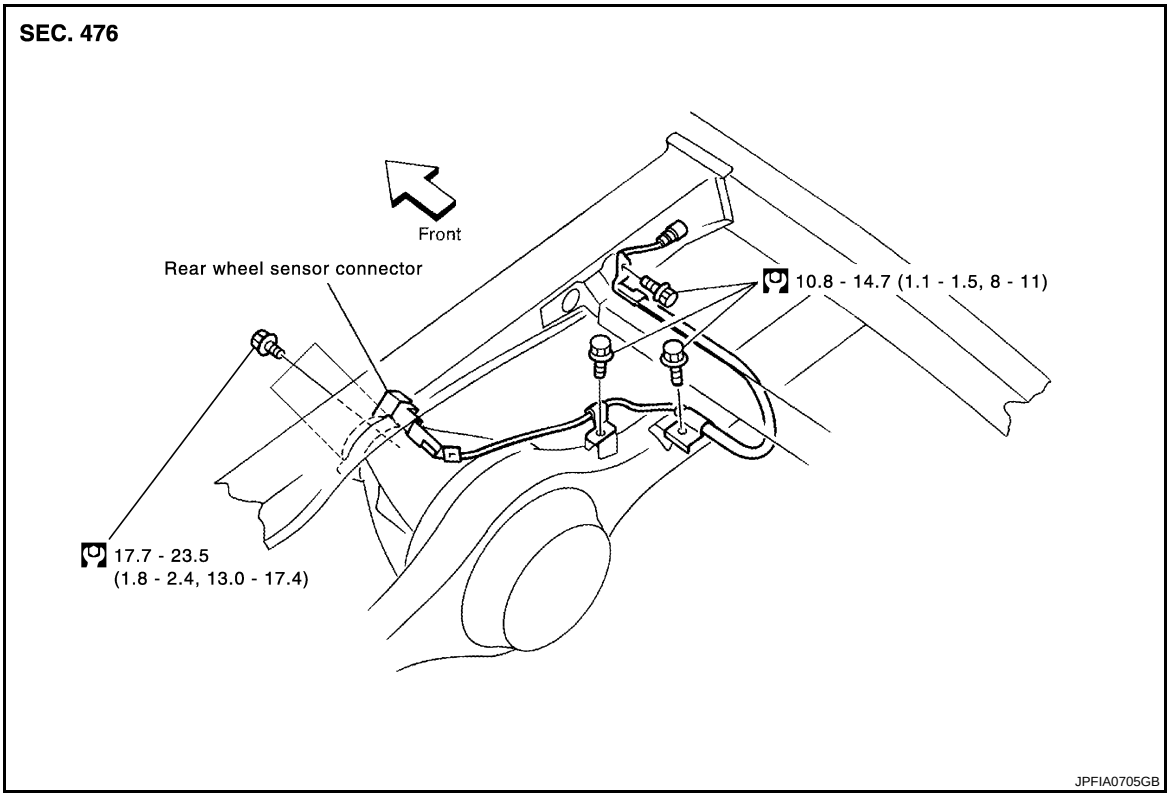

: N·m (kg-m, ft-lb)

Removal and Installation

INFOID:0000000005849141

CAUTION:
Be careful not to damage sensor edge and sensor rotor teeth. When removing the front wheel hub or rear axle shaft assembly, disconnect the ABS wheel sensor from the assembly and move it away.

ACTUATOR AND ELECTRIC UNIT

Exploded View

INFOID:0000000005849142

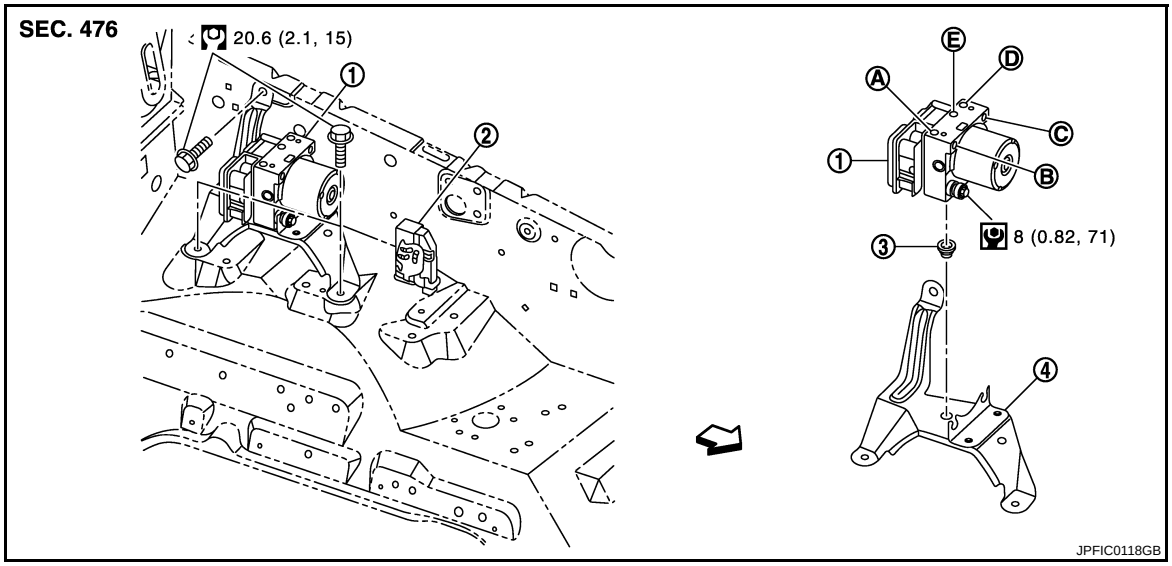

1.	ABS actuator and electric unit (control unit)	2.	ABS actuator and electric unit (control unit) harness connector	3.	Bushing
4.	Bracket				
A.	To rear wheel cylinder	B.	From master cylinder secondary side	C.	From master cylinder primary side
D.	To front LH brake caliper	E.	To front RH brake caliper		

⇦: Vehicle front

: N·m (kg-m, ft-lb)

: N·m (kg-m, ft-in)

Removal and Installation

INFOID:0000000005849143

REMOVAL

1. Disconnect battery cable.
2. Drain brake fluid.
3. Remove mounting bracket fixing bolts and nuts.
4. Disconnect ABS actuator and electric unit (control unit) harness connector, brake pipes and remove fixing nuts.

INSTALLATION

CAUTION:

After installation, refill brake fluid. Then bleed air.

1. Connect brake pipes temporarily.
2. Tighten fixing bolts and nuts.
3. Tighten brake pipes.
4. Connect connector and battery cable.

SERVICE INFORMATION

MODIFICATION NOTICE

Major Modification Item

INFOID:0000000005849144

ABS system has been changed (except for Portugal).

DTC INDEX

C1101 - C1116

INFOID:0000000005849145

DTC	Item (CONSULT-III screen item)	Reference
C1101	RR RH SENSOR-1	BR-76, "DTC Logic"
C1102	RR LH SENSOR-1	
C1103	FR RH SENSOR-1	
C1104	FR LH SENSOR-1	
C1105	RR RH SENSOR-2	BR-78, "DTC Logic"
C1106	RR LH SENSOR-2	
C1107	FR RH SENSOR-2	
C1108	FR LH SENSOR-2	
C1109	BATTERY VOLTAGE [ABNORMAL]	BR-80, "DTC Logic"
C1110	CONTROLLER FAILURE	BR-82, "DTC Logic"
C1111	PUMP MOTOR	BR-83, "DTC Logic"
C1113	G SENSOR	BR-84, "DTC Logic"
C1114	MAIN RELAY	BR-86, "DTC Logic"
C1115	ABS SENSOR [ABNORMAL SIGNAL]	BR-87, "DTC Logic"
C1116	STOP LAMP SW	BR-89, "DTC Logic"

C1120 - C1191

INFOID:0000000005849146

DTC	Item (CONSULT-III screen item)	Reference
C1120	FR LH IN ABS SOL	BR-91, "DTC Logic"
C1121	FR LH OUT ABS SOL	BR-93, "DTC Logic"
C1122	FR RH IN ABS SOL	BR-91, "DTC Logic"
C1123	FR RH OUT ABS SOL	BR-93, "DTC Logic"
C1190	REAR IN ABS SOL	BR-91, "DTC Logic"
C1191	REAR OUT ABS SOL	BR-93, "DTC Logic"

PRECAUTIONS

Precaution for Supplemental Restraint System (SRS) "AIR BAG" and "SEAT BELT PRE-TENSIONER"

INFOID:0000000005849147

The Supplemental Restraint System such as “AIR BAG” and “SEAT BELT PRE-TENSIONER”, used along with a front seat belt, helps to reduce the risk or severity of injury to the driver and front passenger for certain types of collision. Information necessary to service the system safely is included in the SRS and SB section of this Service Manual.

WARNING:

- **To avoid rendering the SRS inoperative, which could increase the risk of personal injury or death in the event of a collision which would result in air bag inflation, all maintenance must be performed by an authorized NISSAN/INFINITI dealer.**
- **Improper maintenance, including incorrect removal and installation of the SRS, can lead to personal injury caused by unintentional activation of the system. For removal of Spiral Cable and Air Bag Module, see the SRS section.**
- **Do not use electrical test equipment on any circuit related to the SRS unless instructed to in this Service Manual. SRS wiring harnesses can be identified by yellow and/or orange harnesses or harness connectors.**

Precaution for Brake System

INFOID:0000000005849148

- Brake fluid use MA-12, "Fluids and Lubricants".
- Do not reuse drained brake fluid.
- Be careful not to splash brake fluid on painted areas.If brake fluid is splashed, wipe it off and flush the area with water immediately.
- Never use mineral oils such as gasoline or kerosene. They will ruin rubber parts of the hydraulic system.
- Use flare nut wrench when removing and installing brake tube.
- Brake system is an important safety parts. If a brake fluid leak is detected, always disassemble the suspect parts. If any non-standard condition is detected, replace parts with new one.
- Before working, turn ignition switch OFF and disconnect connector for ABS actuator and electric unit or battery negative terminal.

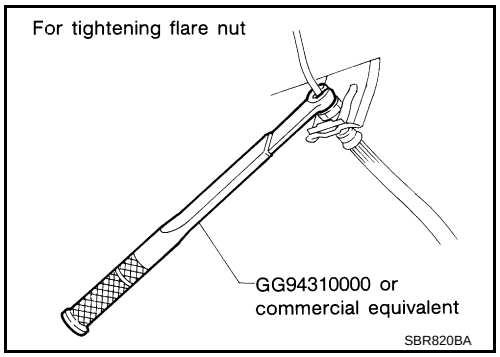

WARNING:

Clean brake pads and shoes with a waste cloth, then wipe with a dust collector.

Precaution for Brake Control

INFOID:0000000005849149

- During ABS operation, brake pedal lightly vibrates and a mechanical noise may be heard. This is normal.
- Just after starting vehicle after ignition switch ON, brake pedal may vibrate or motor operating noise may be heard from passenger compartment (rear floor). This is a normal status of operation check.
- Stopping distance may be longer than that of vehicles without ABS when vehicle drives on rough, gravel, or snow-covered (fresh, deep snow) roads.
- When an error is indicated by ABS or another warning lamp, collect all necessary information from customer (what symptoms are present under what conditions) and check for simple causes before starting diagnostic servicing. Besides electrical system inspection, check brake booster operation, brake fluid level, and fluid leaks.
- If tire size and type are used in an improper combination, or brake pads are not Genuine NISSAN parts, stopping distance or steering stability may deteriorate.
- If there is a radio, antenna, or antenna lead-in wire (including wiring) near control module, ABS function may have a malfunction or error.
- If aftermarket parts (car stereo, CD player, etc.) have been installed, check for incidents such as harness pinches, open circuits, and improper wiring.

PREPARATION

Special Service Tool

INFOID:0000000005849150

Tool name Tool number		Description
Flare nut torque wrench a: 10 mm (0.39 in) GG94310000	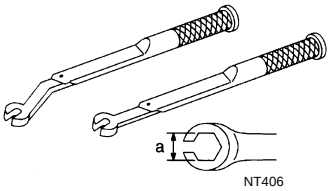	Removing and installing brake piping

SYSTEM DESCRIPTION

Schematic

INFOID:0000000005849151

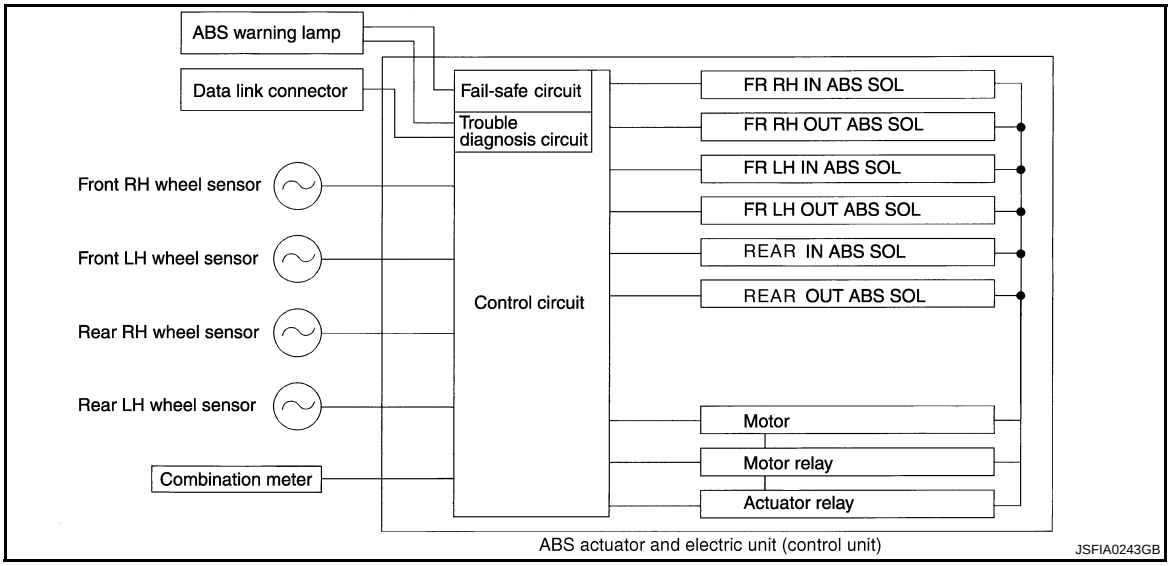

Function

INFOID:0000000005849152

ABS

- The Anti-Lock Braking System is a function that detects wheel revolution while braking, and it improves handling stability during sudden braking by electrically preventing 4 wheels lock. Maneuverability is also improved for avoiding obstacles.
- Electrical system diagnosis by CONSULT-III is available.

Operation That Is Not "System Error"

INFOID:0000000005849153

ABS

- When starting engine or just after starting vehicle, brake pedal may vibrate or the motor operating noise may be heard from engine room. This is a normal state of the operation check.
- During ABS operation, brake pedal lightly vibrates and a mechanical noise may be heard. This is normal.
- Stopping distance may be longer than that of vehicles without ABS when vehicle drives on rough, gravel, or snow-covered (fresh, deep snow) roads.

Fail-Safe Function

INFOID:0000000005849154

- ABS warning lamp turns ON if error (malfunction) is detected in ABS system. ABS control does not function. The brake function becomes same as the vehicle without ABS.

Hydraulic Circuit Diagram

INFOID:0000000005849155

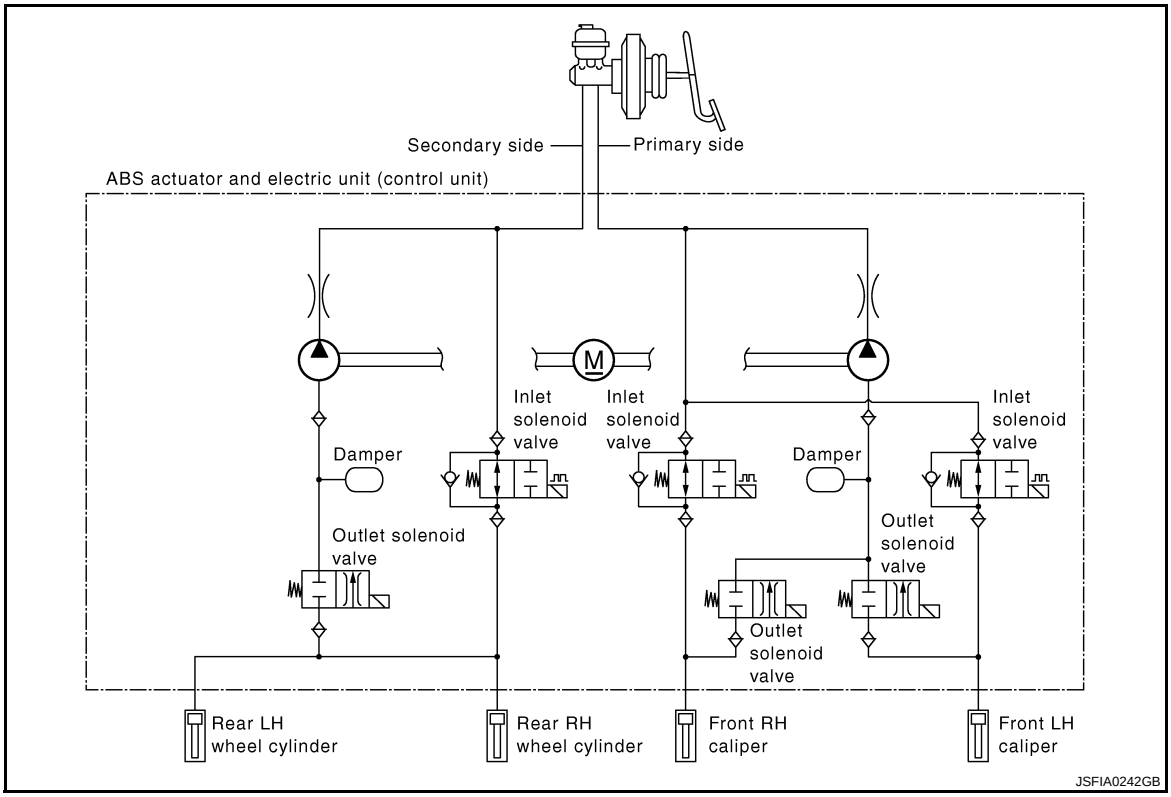

TROUBLE DIAGNOSIS

Component Parts Location

INFOID:0000000005849156

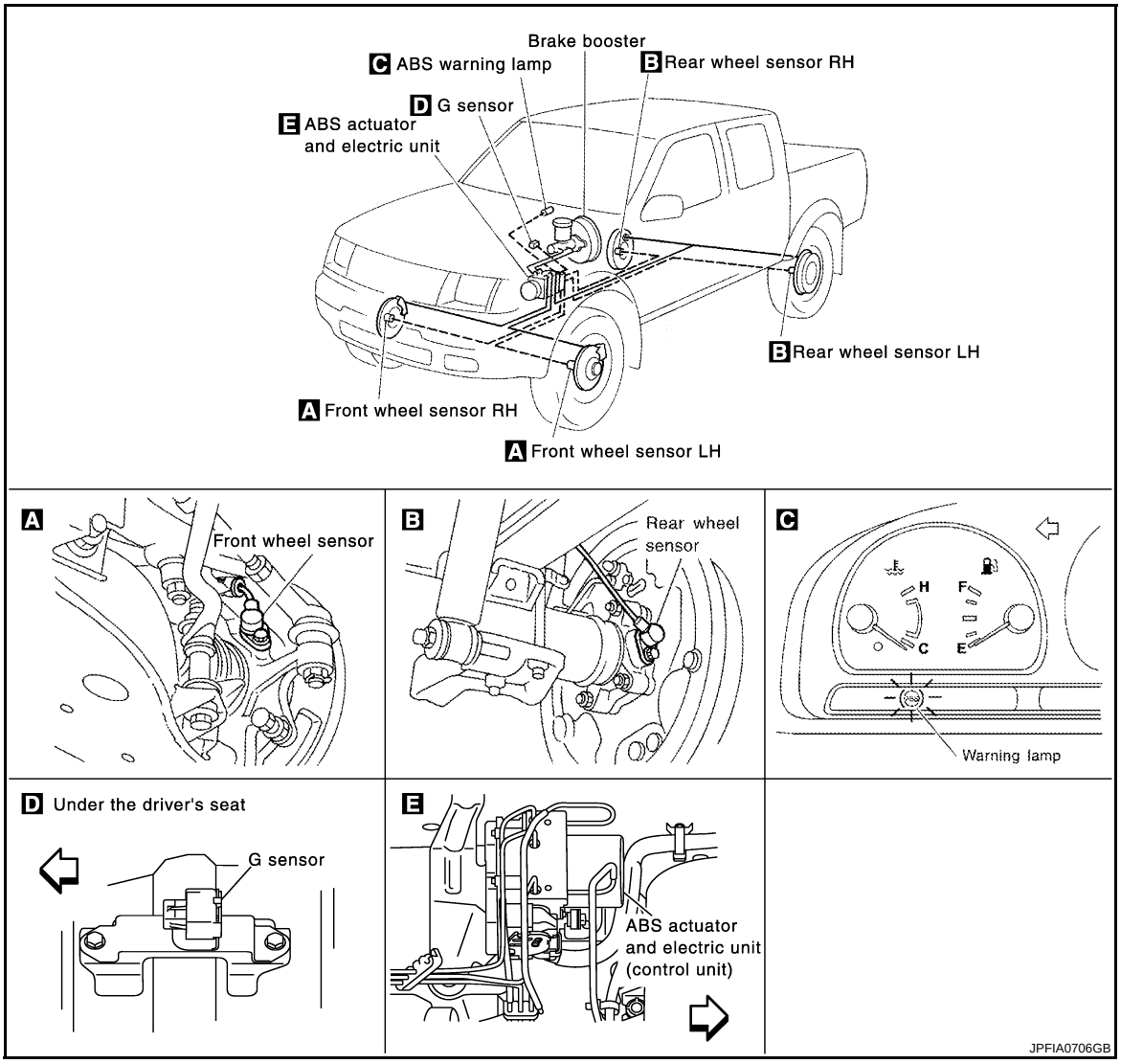

Wiring Diagram

INFOID:0000000005849158

FOR EUROPE

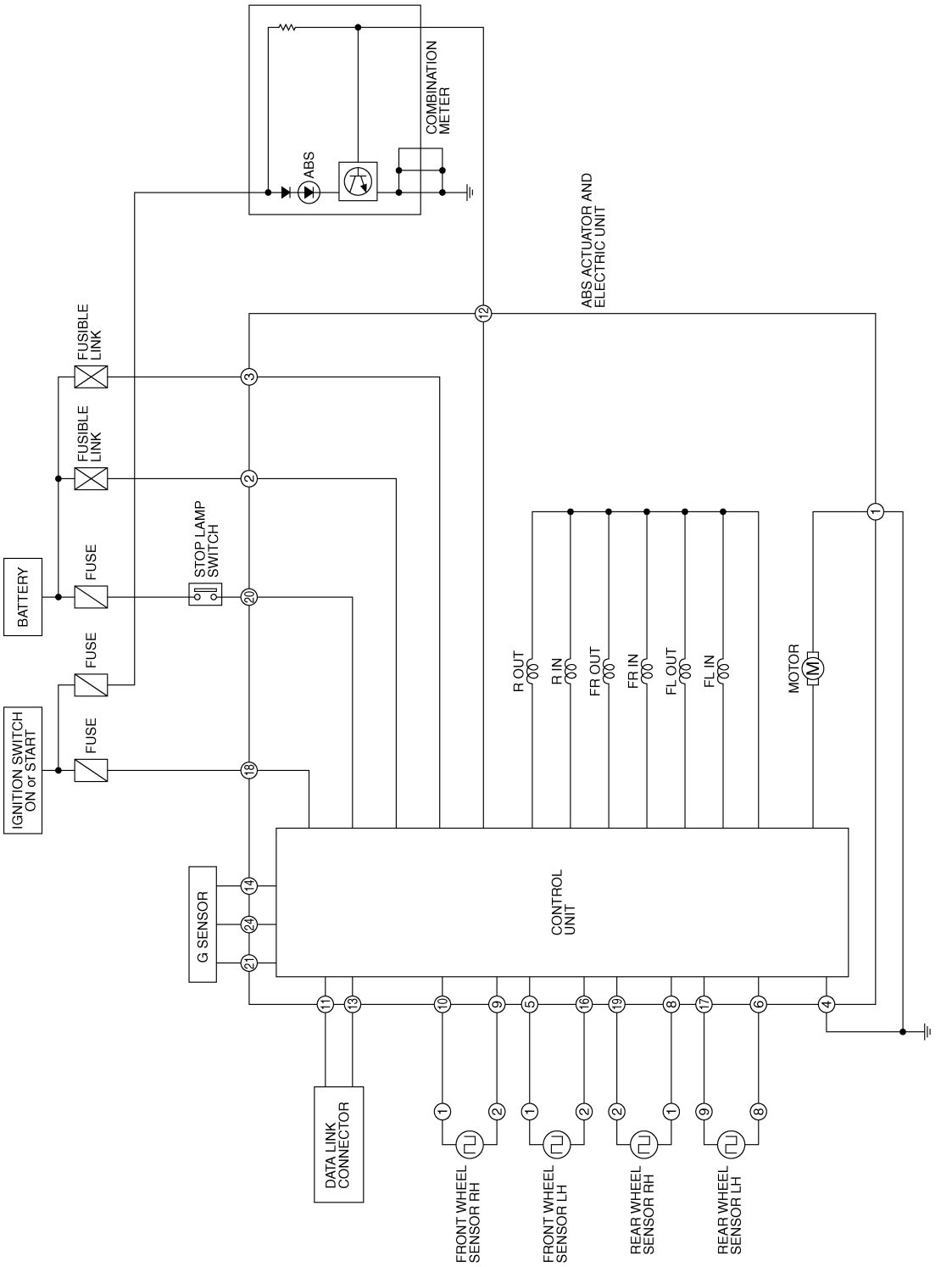

JCFWM0487GE

BR-ABS-04

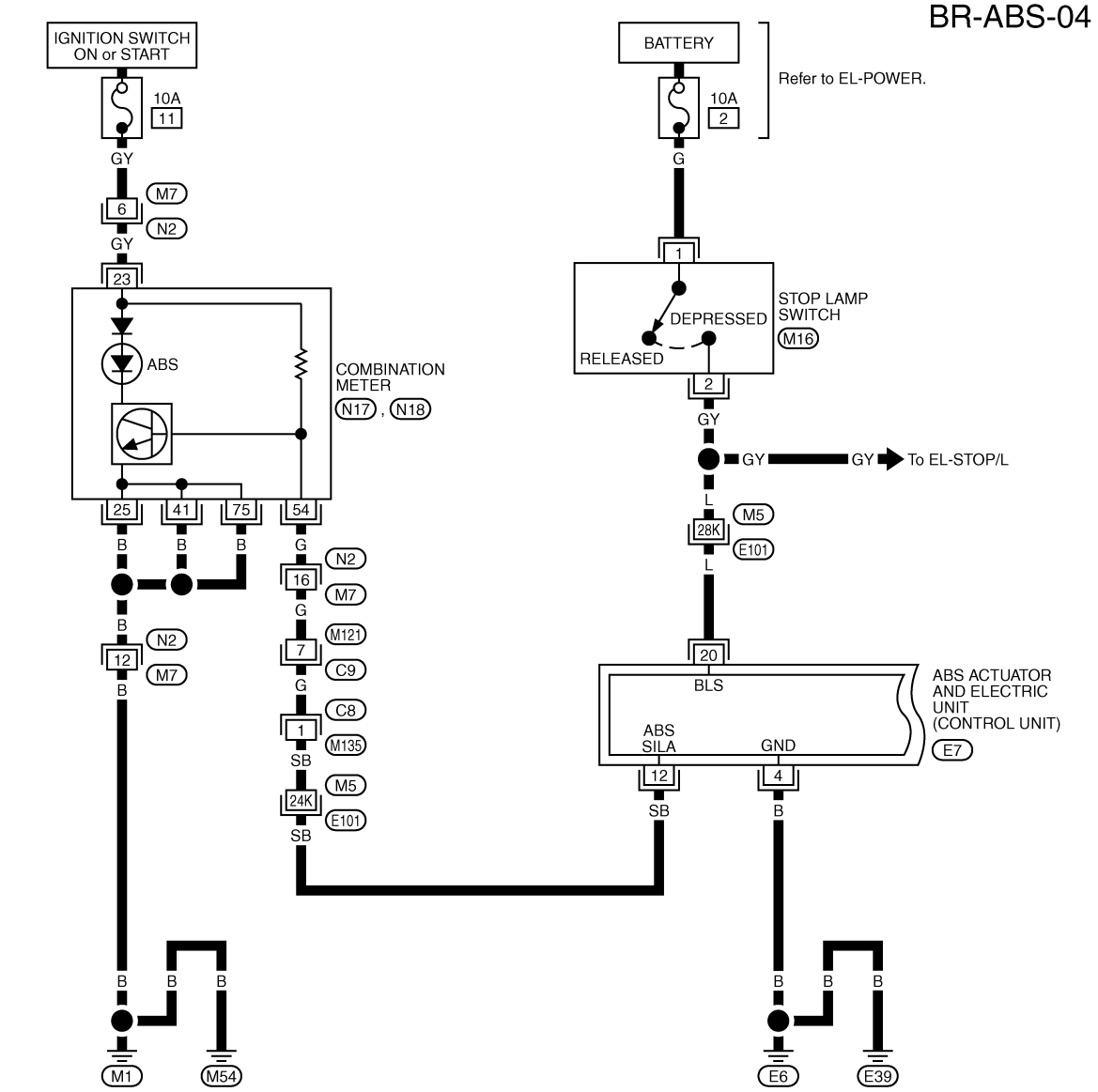

Refer to last page (Foldout page).
M5 , E101

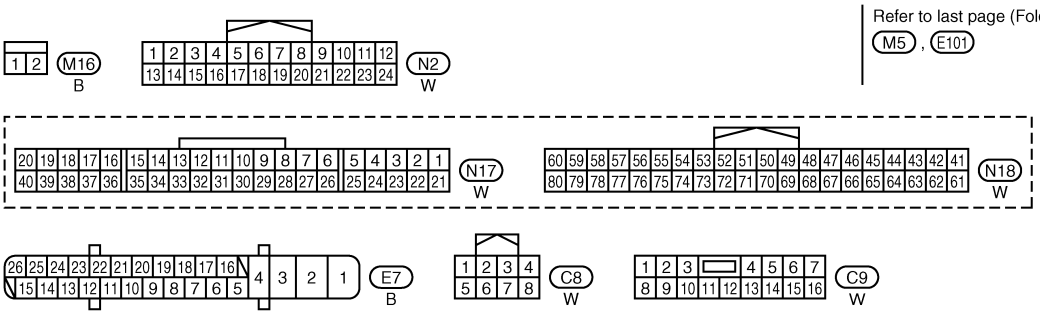

JCFWM0491GE

BR-ABS-05

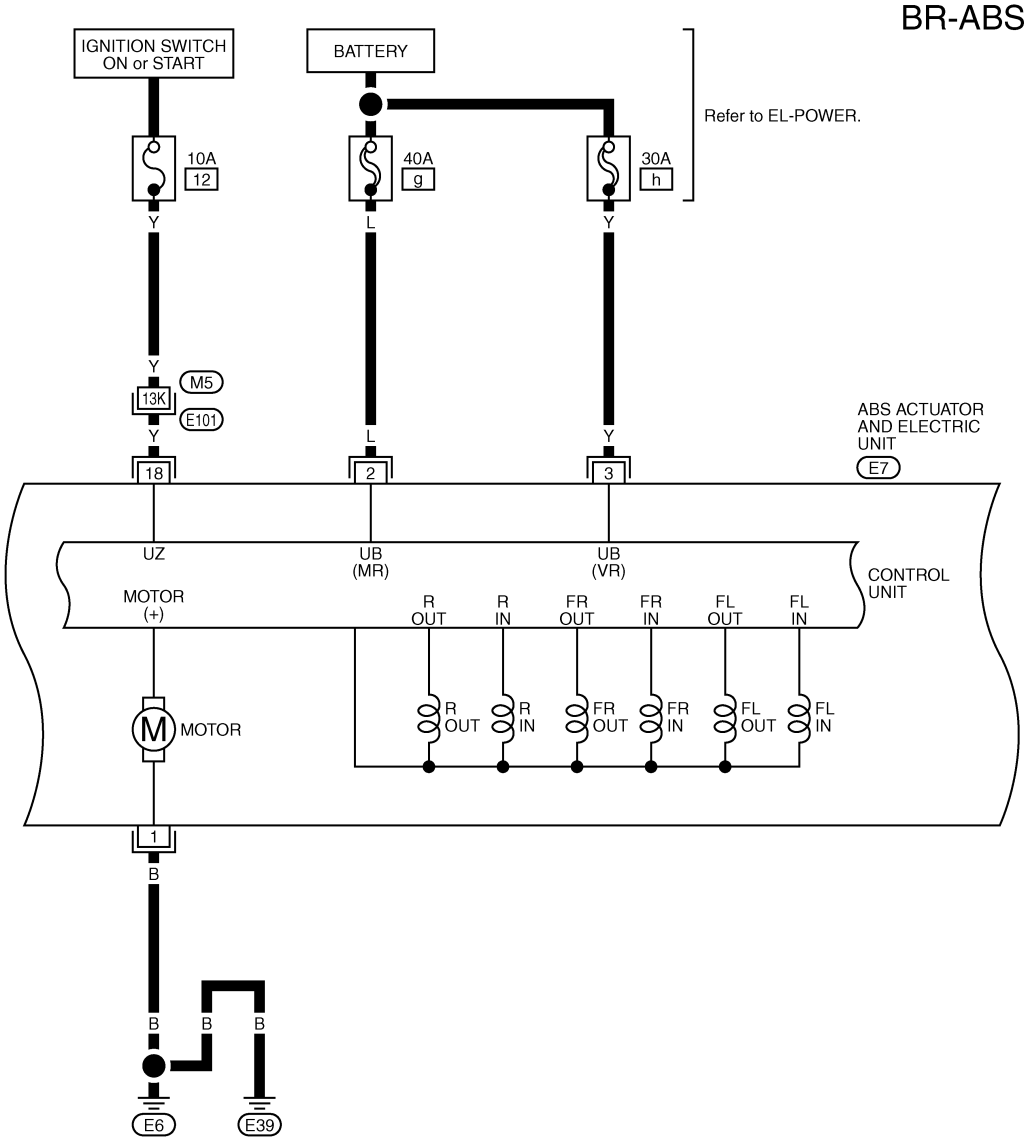

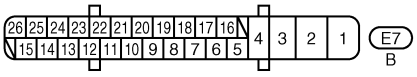

Refer to last page (Foldout page).
M5 , E101

JCFWM0492GE

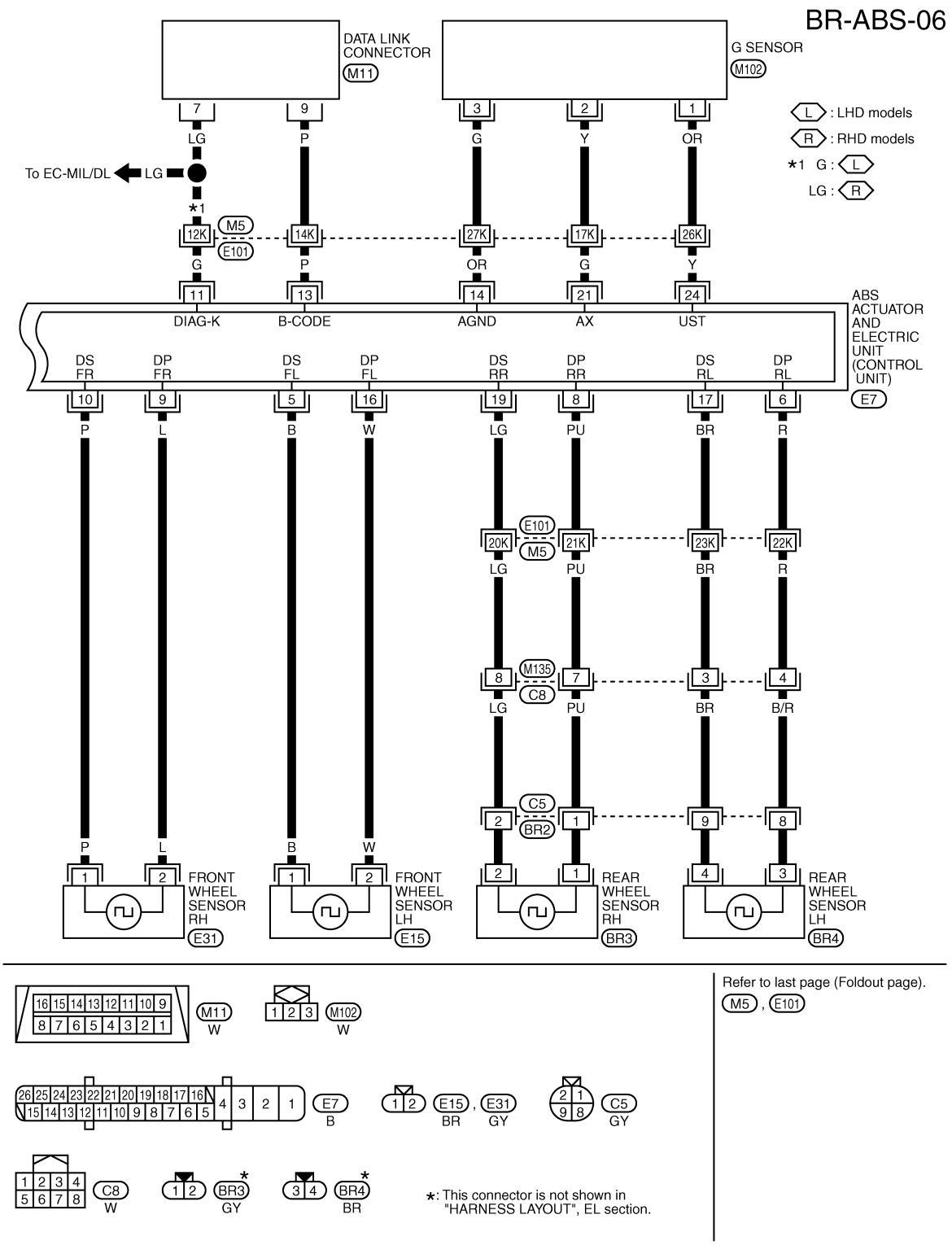

EXCEPT FOR EUROPE

For New Caledonia, Tahiti and Chile

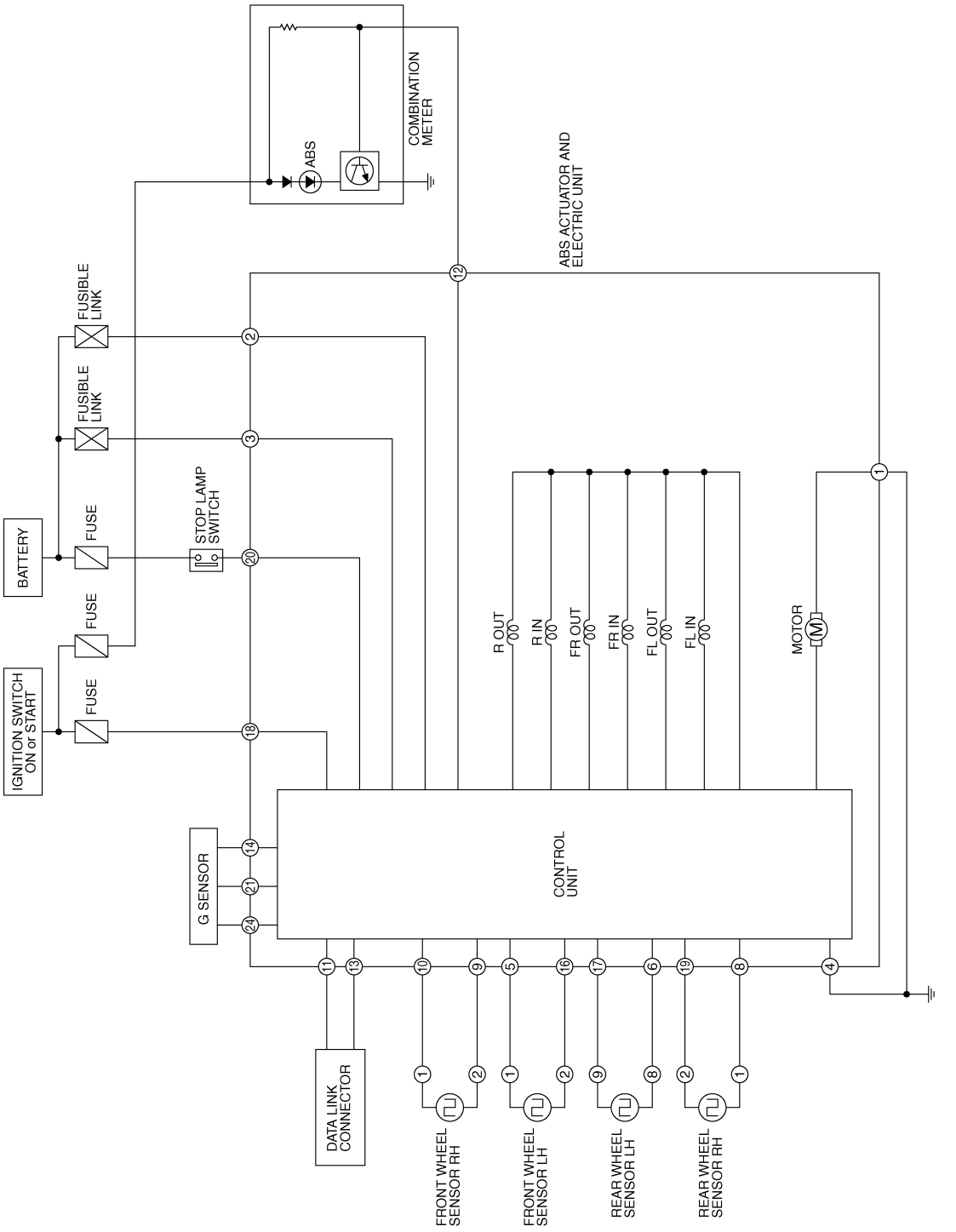

JCFWM0459GE

BR-ABS-04

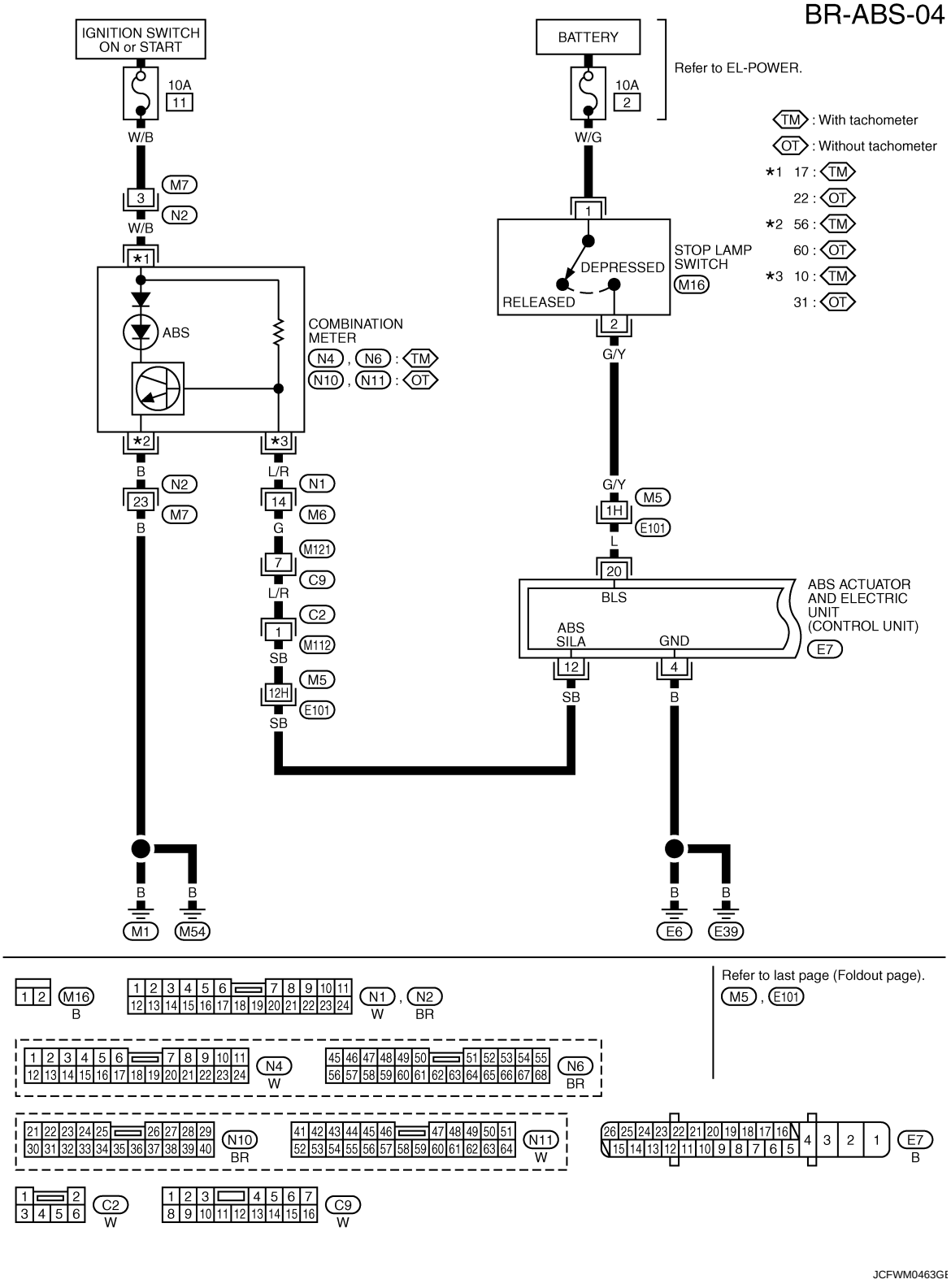
IGNITION SWITCH ON or START
10A
11
W/B
M7
3
N2
W/B
*1
ABS
COMBINATION METER
N4 , N6 : TM
N10 , N11 : OT
*2
*3
B
L/R
N2
23
M7
B
N1
14
M6
G
M121
7
C9
L/R
C2
1
M112
SB
M5
12H
E101
SB
BATTERY
10A
2
W/G
Refer to EL-POWER.
1
DEPRESSED
RELEASED
STOP LAMP SWITCH
M16
2
G/Y
G/Y
M5
1H
E101
L
20
BLS
ABS SILA
GND
ABS ACTUATOR AND ELECTRIC UNIT (CONTROL UNIT)
E7
12
4
SB
B
B
B
M1
M54
B
B
E6
E39
TM : With tachometer
OT : Without tachometer
*1 17 : TM
22 : OT
*2 56 : TM
60 : OT
*3 10 : TM
31 : OT
M16
B
N1 , N2
W BR
Refer to last page (Foldout page).
M5 , E101
N4
W
N6
BR
N10
BR
N11
W
E7
B
C2
W
C9
W
JCFWM0463GE

BR-ABS-05

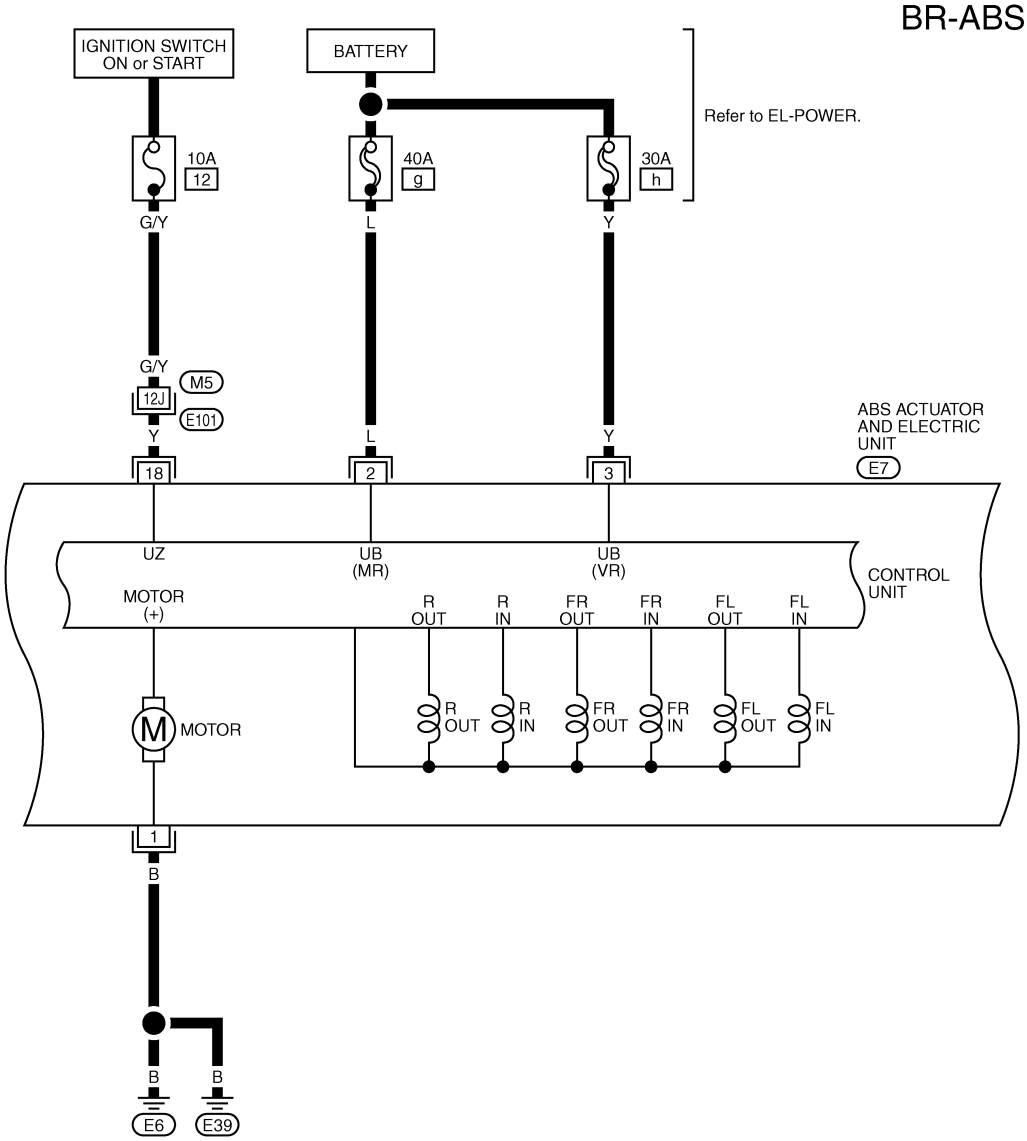

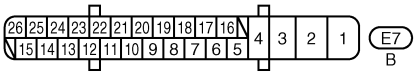

Refer to last page (Foldout page).
M5 , E101

JCFWM0464GE

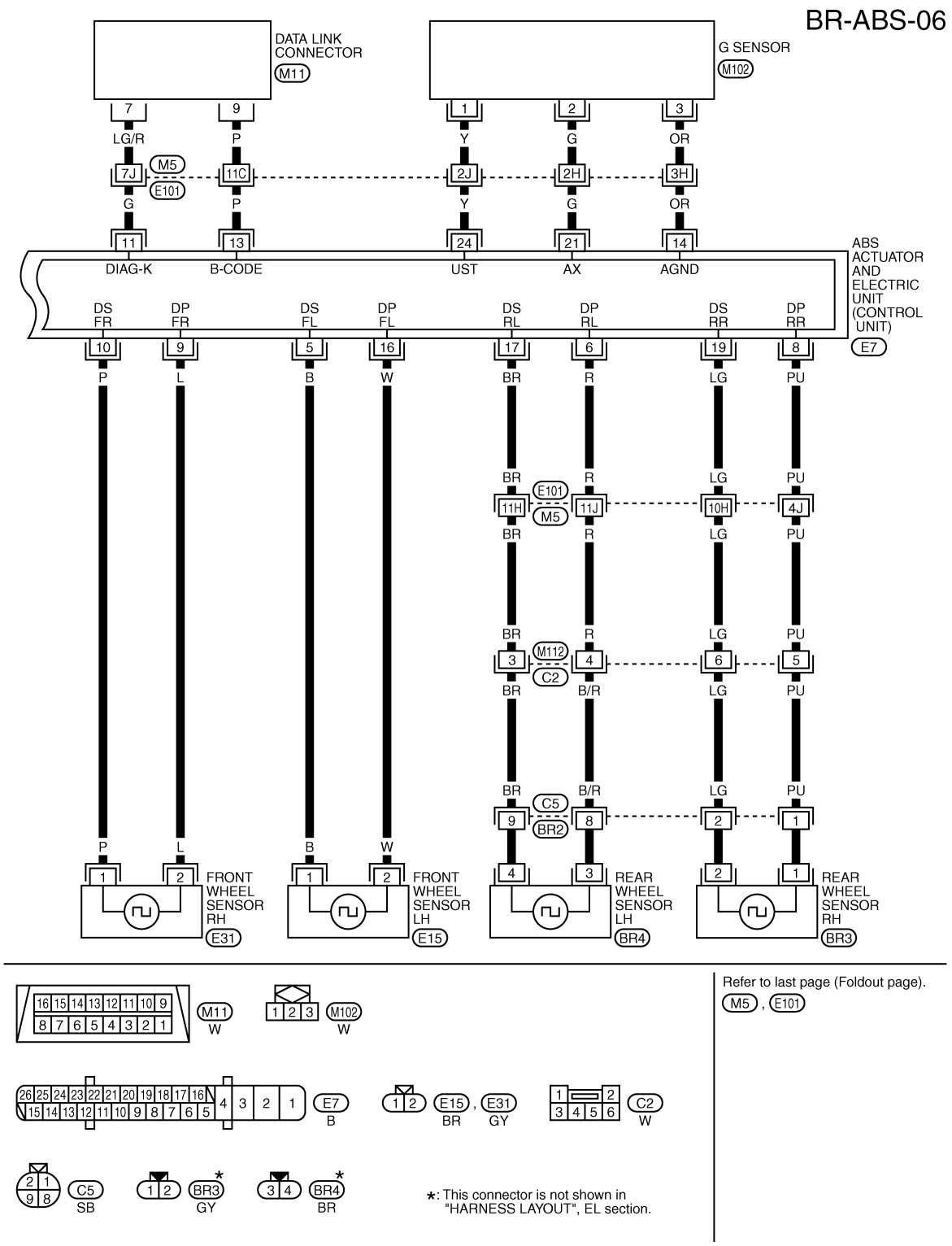

EXCEPT FOR EUROPE, RUSSIA, NEW CALEDONIA, TAHITI AND CHILE

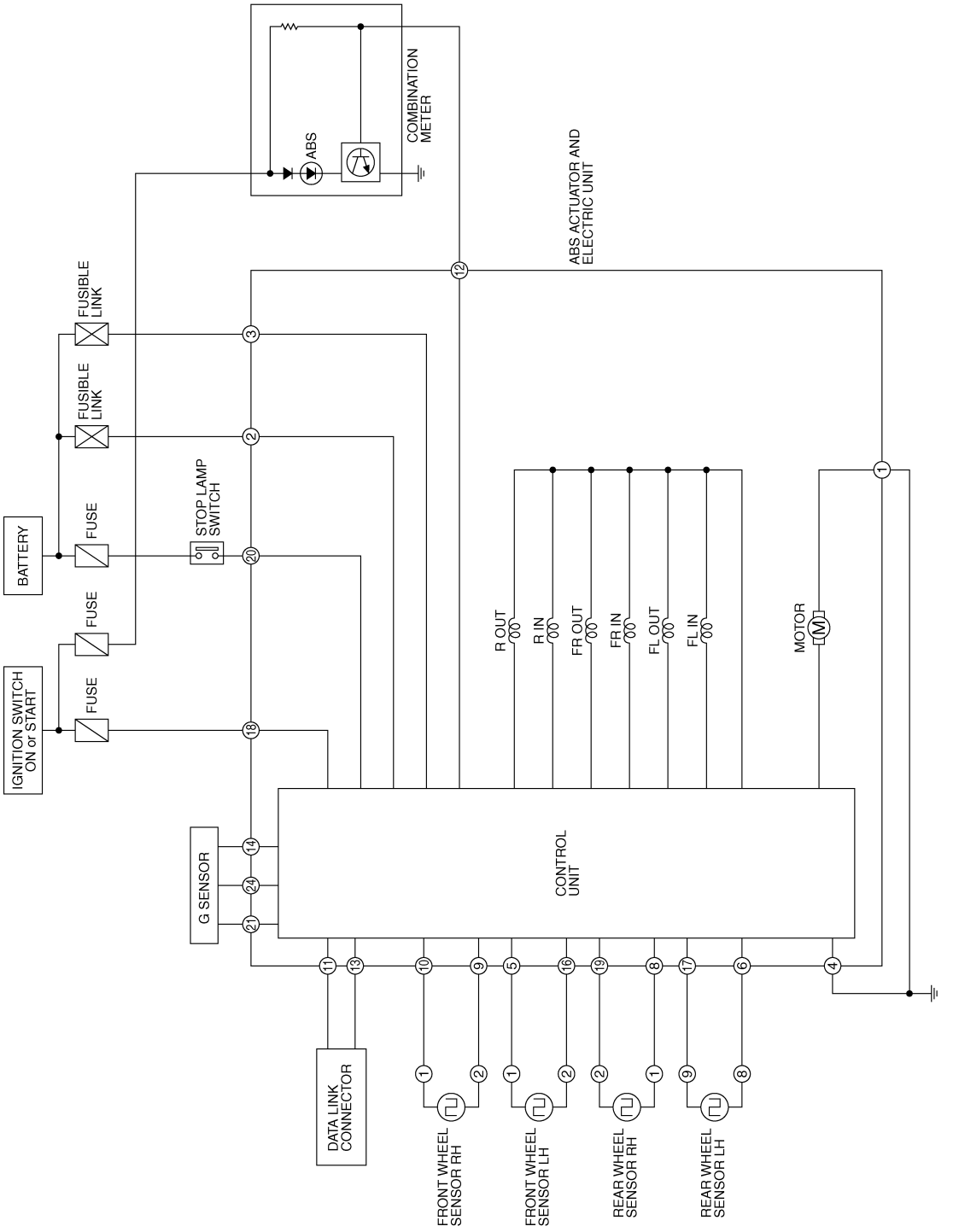

JCFWM0470GE

BR-ABS-04

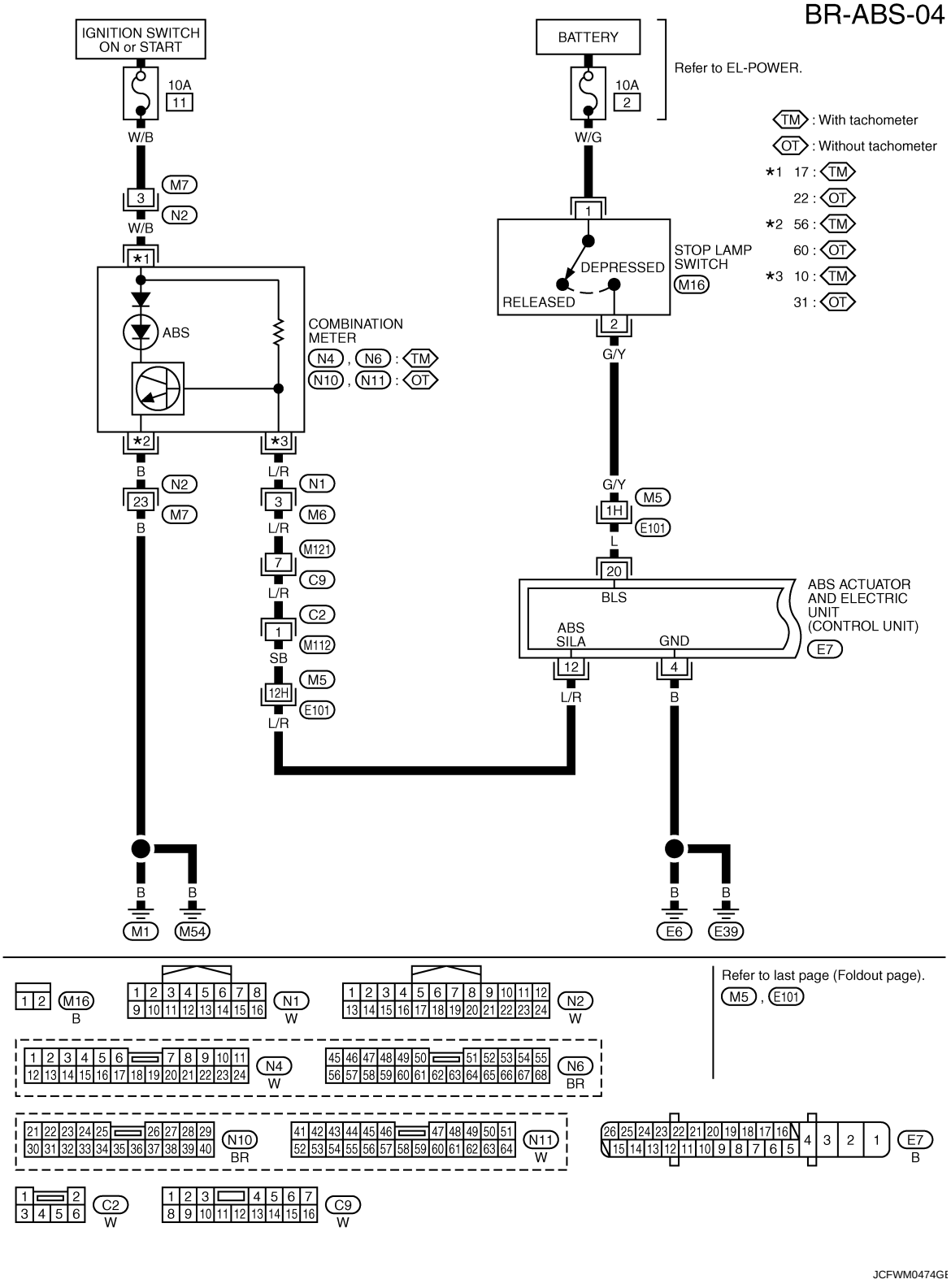
IGNITION SWITCH ON or START
10A 11
W/B
M7
3
N2
W/B
*1
ABS
COMBINATION METER
N4 , N6 : TM
N10 , N11 : OT
*2
*3
B
L/R
N2
23
M7
B
N1
3
M6
L/R
M121
7
C9
L/R
C2
1
M112
SB
M5
12H
E101
L/R
M1
M54
BATTERY
10A 2
W/G
Refer to EL-POWER.
1
DEPRESSED
RELEASED
STOP LAMP SWITCH
M16
2
G/Y
G/Y
M5
1H
E101
L
20
BLS
ABS SILA
GND
ABS ACTUATOR AND ELECTRIC UNIT (CONTROL UNIT)
E7
12
4
L/R
B
B
B
E6
E39
TM : With tachometer
OT : Without tachometer
*1 17 : TM
22 : OT
*2 56 : TM
60 : OT
*3 10 : TM
31 : OT
M16
B
N1
W
N2
W
N4
W
N6
BR
N10
BR
N11
W
E7
B
C2
W
C9
W
Refer to last page (Foldout page).
M5 , E101
JCFWM0474GE

BR-ABS-05

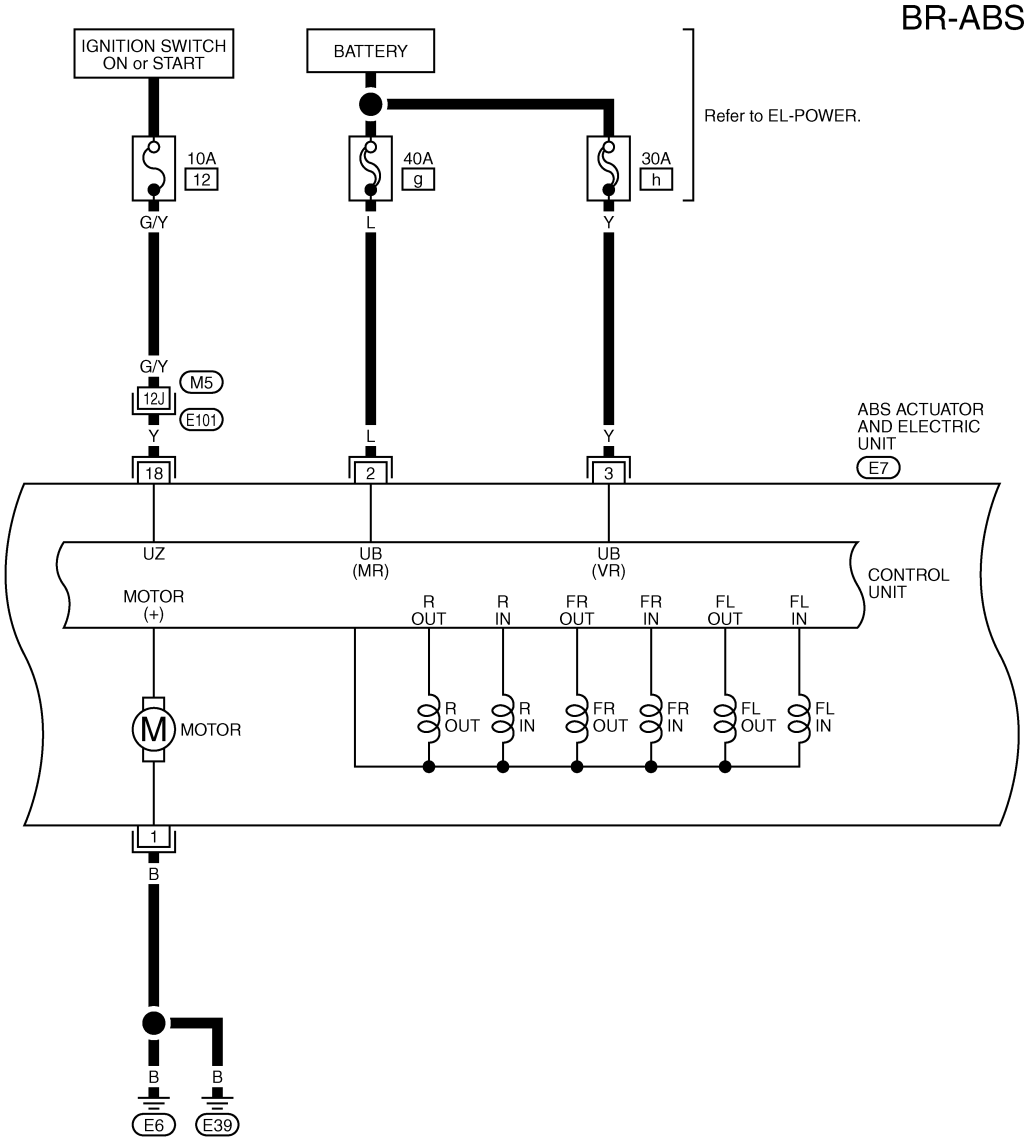

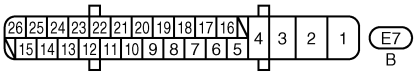

Refer to last page (Foldout page).
M5 , E101

JCFWM0475GE

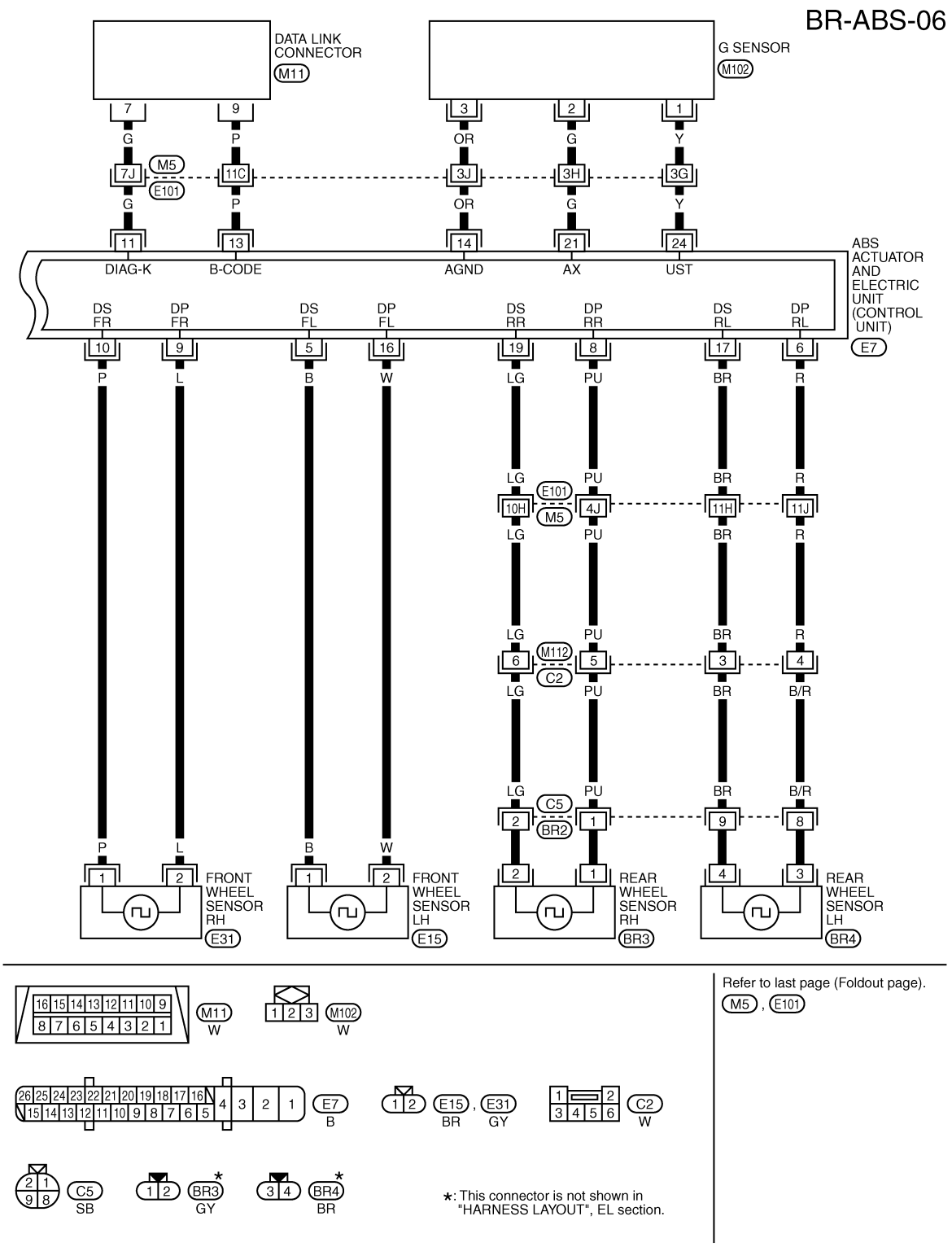
BR-ABS-06
DATA LINK CONNECTOR
M11
G SENSOR
M102
M5
E101
DIAG-K
B-CODE
AGND
AX
UST
ABS ACTUATOR AND ELECTRIC UNIT (CONTROL UNIT)
E7
DS FR
DP FR
DS FL
DP FL
DS RR
DP RR
DS RL
DP RL
M112
C2
C5
BR2
FRONT WHEEL SENSOR RH
E31
FRONT WHEEL SENSOR LH
E15
REAR WHEEL SENSOR RH
BR3
REAR WHEEL SENSOR LH
BR4
Refer to last page (Foldout page).
M5 , E101
M11 W
M102 W
E7 B
E15 BR , E31 GY
C2 W
C5 SB
BR3 GY
BR4 BR
*: This connector is not shown in "HARNESS LAYOUT", EL section.
JCFWM0476GE

BR-ABS-10

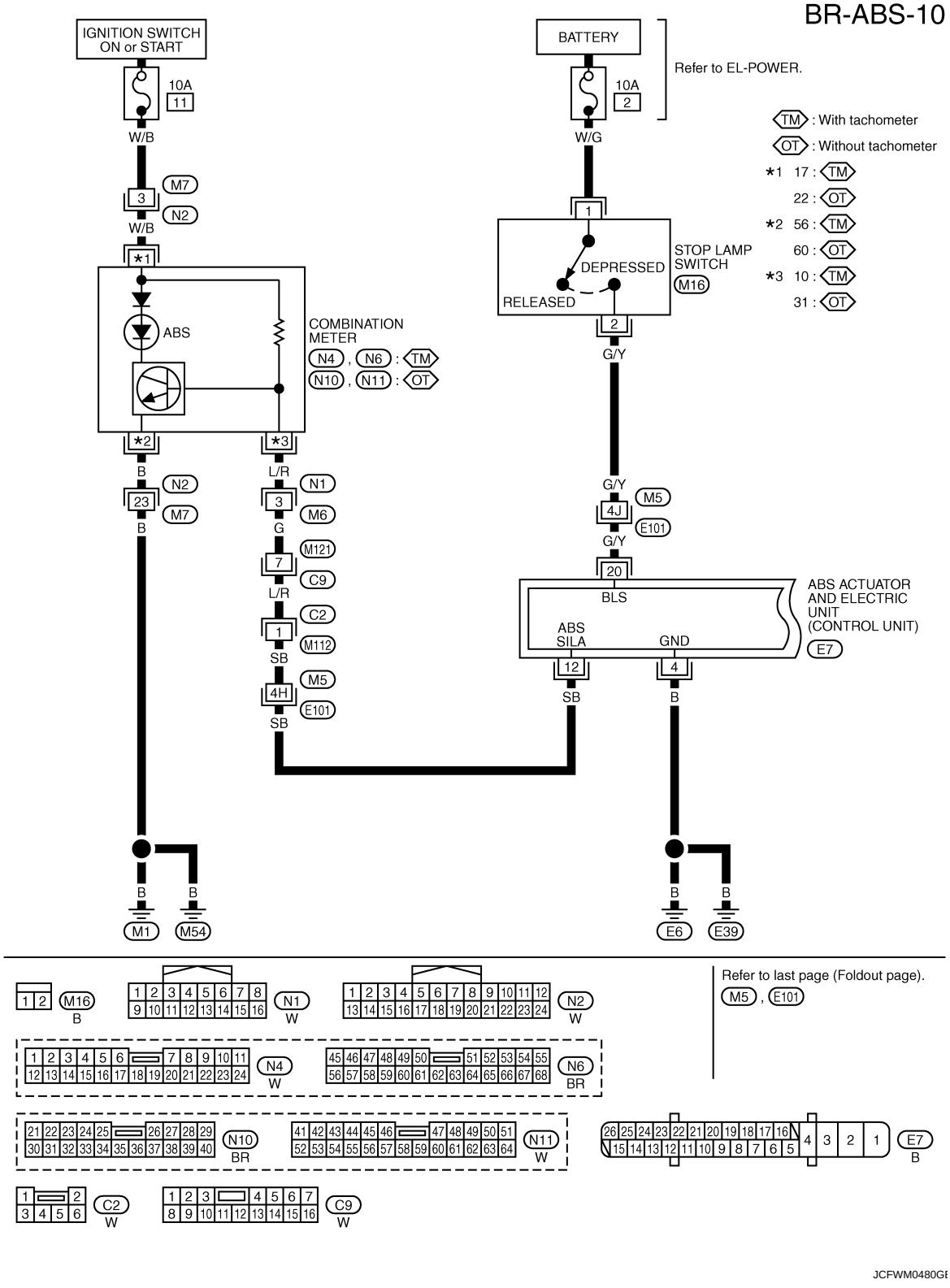

JCFWM0480GE

BR-ABS-11

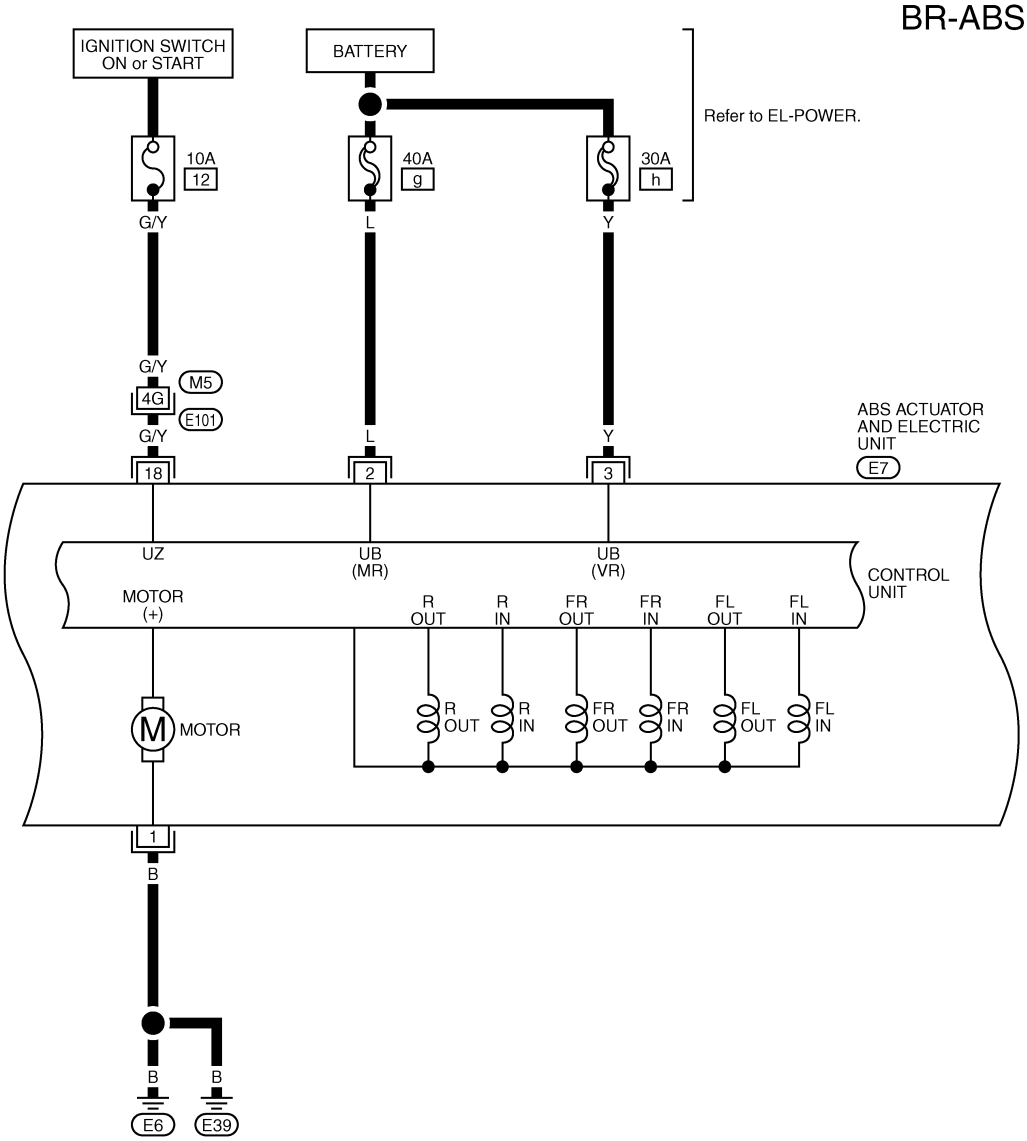

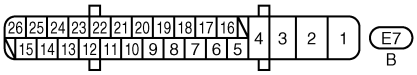

Refer to last page (Foldout page).
M5 , E101

JCFWM0481GE

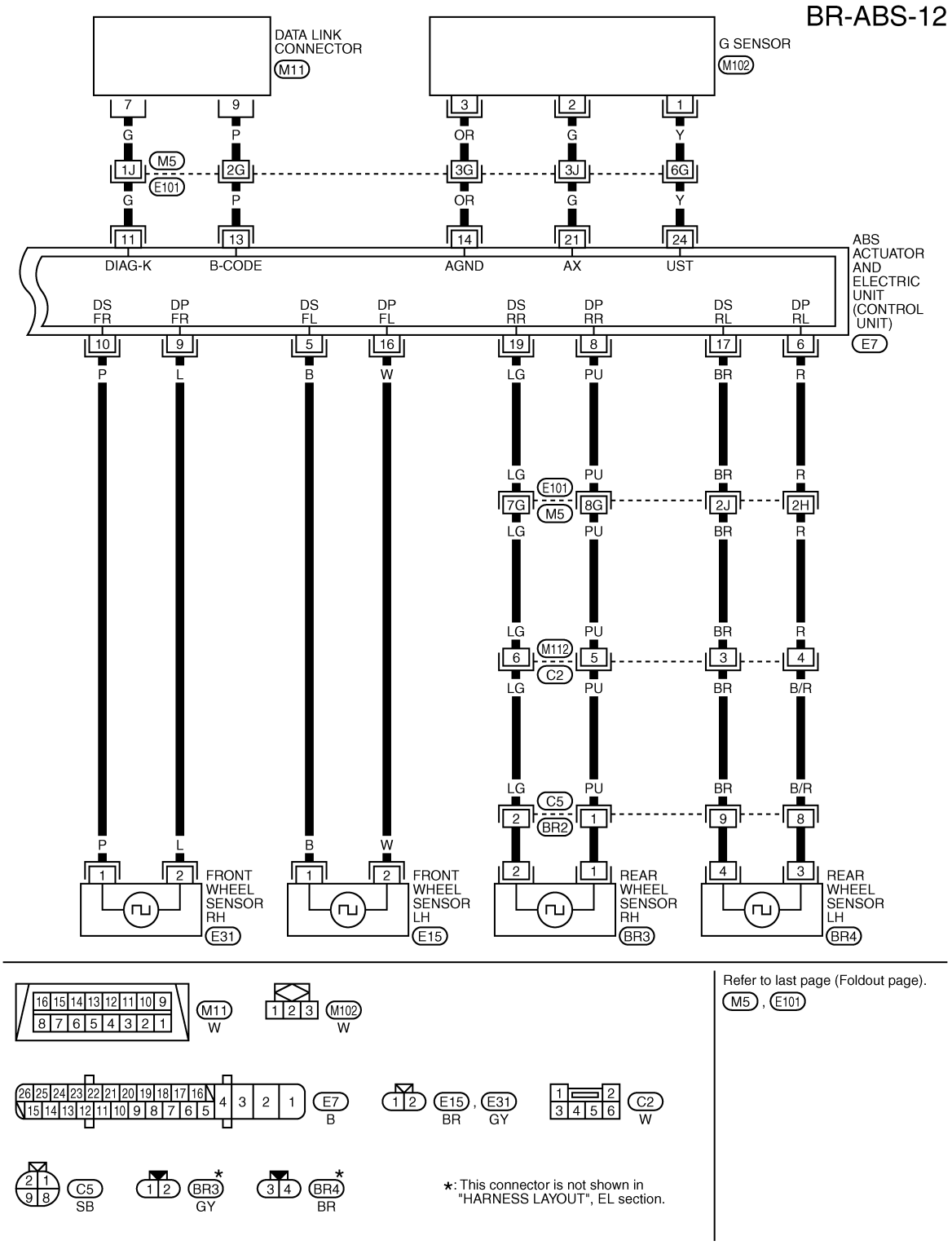

Control Unit Input/Output Signal Standard

INFOID:0000000005849159

REFERENCE VALUE FROM CONSULT-III

CAUTION:

Displayed item is data calculated by control unit. Therefore, it may indicate a normal value even if output circuit (harness) is open or shorted.

Monitor item	Display content	Data monitor.	
		Condition	Reference value in normal operation
FR LH SENSOR FR RH SENSOR RR LH SENSOR RR RH SENSOR	Wheel speed	Vehicle stopped	0 [km/h (MPH)]
		Vehicle running (Note 1)	Nearly matches the speedometer display (± 10 % or less)
WARNING LAMP	ABS warning lamp status (Note 2)	When ABS warning lamp is ON	On
		When ABS warning lamp is OFF	Off
STOP LAMP SW	Brake pedal operation	Brake pedal depressed	On
		Brake pedal not depressed	Off
MOTOR RELAY	Motor and motor relay operation status	When the motor relay and motor are operating	On
		When the motor relay and motor are not operating	Off
ACTUATOR RLY	Actuator relay operation status	When the actuator relay is operating	On
		When the actuator relay is not operating	Off
FR LH IN SOL FR LH OUT SOL FR RH IN SOL FR RH OUT SOL REAR IN SOL REAR OUT SOL	Operation status of all solenoid valve	Actuator (solenoid valve) is active (“ACTIVE TEST” with CONSULT-III) or actuator relay is inactive (in fail-safe mode).	On
		When the actuator (solenoid valve) is not active and actuator relay is active (ignition switch ON).	Off
BATTERY VOLT	Battery voltage supplied to the ABS actuator and electric unit (control unit)	Ignition switch ON	10 - 16 V

Note 1: Confirm tire pressure is normal.

Note 2: ON/OFF timing of ABS warning lamp

ON: For approximately 1 second after ignition switch is turned ON, or when malfunction is detected.

OFF: Approximately 1 second after ignition switch is turned ON (When system is in normal operation.)

CONSULT-III Function

INFOID:0000000005849160

CONSULT-III MAIN FUNCTION

CONSULT-III can display each self-diagnostic item using the diagnostic test modes shown following.

Diagnostic test mode	Function
SELF-DIAG RESULTS	Self-diagnostic results can be read and erased quickly.
DATA MONITOR	Input/Output data in the ABS actuator and electric unit (control unit) can be read.
ACTIVE TEST	Diagnostic Test Mode in which CONSULT-III drives some actuators apart from the ABS actuator and electric unit (control unit) and also shifts some parameters in a specified range.
ECU PART NUMBER	ABS actuator and electric unit (control unit) part number can be read.

Self-Diagnosis

INFOID:0000000005849161

DISPLAY ITEM LIST

Suspect systems	Malfunction detecting condition	Check item
RR RH SENSOR-1 (Note) [C1101]	When the circuit in the rear RH wheel sensor is open.	• Check tire • Check sensor and sensor rotor • Check wheel sensor circuit
RR LH SENSOR-1 (Note) [C1102]	When the circuit in the rear LH wheel sensor is open.	
FR RH SENSOR-1 (Note) [C1103]	When the circuit in the front RH wheel sensor is open.	
FR LH SENSOR-1 (Note) [C1104]	When the circuit in the front LH wheel sensor is open.	
RR RH SENSOR-2 (Note) [C1105]	When the circuit in the rear RH wheel sensor is short-circuited. Or when the sensor power voltage is outside the standard. When the distance between the wheel sensor and sensor rotor is too large and the sensor pulse cannot be recognized by the control unit.	
RR LH SENSOR-2 (Note) [C1106]	When the circuit in the rear LH wheel sensor is short-circuited. Or when the sensor power voltage is outside the standard. When the distance between the wheel sensor and sensor rotor is too large and the sensor pulse cannot be recognized by the control unit.	
FR RH SENSOR-2 (Note) [C1107]	When the circuit in the front RH wheel sensor is short-circuited. Or when the sensor power voltage is outside the standard. When the distance between the wheel sensor and sensor rotor is too large and the sensor pulse cannot be recognized by the control unit.	
FR LH SENSOR-2 (Note) [C1108]	When the circuit in the front LH wheel sensor is short-circuited. Or when the sensor power voltage is outside the standard. When the distance between the wheel sensor and sensor rotor is too large and the sensor pulse cannot be recognized by the control unit.	
ABS SENSOR [ABNORMAL SIGNAL] [C1115]	Wheel sensor input has generated a malfunction.	
BATTERY VOLTAGE [ABNORMAL] [C1109]	When the ABS actuator and electric unit (control unit) power voltage is lower than normal.	• Check battery voltage
CONTROLLER FAILURE [C1110]	When there is an internal malfunction in the ABS actuator and electric unit (control unit).	• Replace ABS actuator and electric unit (control unit)
G SENSOR [C1113]	G sensor is malfunctioning, or circuit of side G sensor is open or shorted.	• Check G sensor • Check G sensor circuit
STOP LAMP SW [C1116]	Stop lamp switch circuit is open.	• Check stop lamp switch • Check stop lamp switch circuit

Suspect systems	Malfunction detecting condition	Check item
PUMP MOTOR [C1111]	During actuator motor operation with ON, when actuator motor turns OFF or when control line for actuator motor relay is open.	• Check ABS actuator and electric unit (control unit)
MAIN RELAY [C1114]	When the control unit detects a malfunction in the actuator relay system.	
FR LH IN ABS SOL [C1120]	When the control unit detects a malfunction in the front left inlet solenoid system.	
FR LH OUT ABS SOL [C1121]	When the control unit detects a malfunction in the front left outlet solenoid system.	
FR RH IN ABS SOL [C1122]	When the control unit detects a malfunction in the front right inlet solenoid system.	
FR RH OUT ABS SOL [C1123]	When the control unit detects a malfunction in the front right outlet solenoid system.	
REAR IN ABS SOL [C1190]	When the control unit detects a malfunction in the rear inlet solenoid system.	
REAR OUT ABS SOL [C1191]	When the control unit detects a malfunction in the rear outlet solenoid system.	

NOTE:

After completing repairs of shorted sensor circuit, when ignition switch is turned ON, ABS warning lamp turns ON. Check that ABS warning lamp turns OFF while driving vehicle at 30 km/h (19 MPH) or more for approximately 1 minute according to self-diagnosis procedure. In addition, if wheel sensor-2 is displayed for wheels, check wheel sensor circuit and also check control unit power voltage.

Data Monitor

INFOID:0000000005849162

DISPLAY ITEM LIST

×: Applicable ▼: Optional item

Item (Unit)	Monitor item selection		Remarks
	ECU INPUT SIGNALS	MAIN SIGNALS	
FR LH SENSOR [km/h (MPH)]	×	×	Displays wheel speed calculated by front LH wheel sensor signal.
FR RH SENSOR [km/h (MPH)]	×	×	Displays wheel speed calculated by front RH wheel sensor signal.
RR LH SENSOR [km/h (MPH)]	×	×	Displays wheel speed calculated by rear LH wheel sensor signal.
RR LH SENSOR [km/h (MPH)]	×	×	Displays wheel speed calculated by rear RH wheel sensor signal.
STOP LAMP SW (On/Off)	×	×	Displays operating condition (On/Off) of stop lamp switch (On/Off).
BATTERY VOLT (V)	×	×	Displays voltage supplied to ABS control unit.
FR LH IN SOL (On/Off)	▼	×	Displays operating condition (On/Off) of front LH ABS inlet solenoid.
FR LH OUT SOL (On/Off)	▼	×	Displays operating condition (On/Off) of front LH ABS outlet solenoid.
FR RH IN SOL (On/Off)	▼	×	Displays operating condition (On/Off) of front RH ABS inlet solenoid.
FR RH OUT SOL (On/Off)	▼	×	Displays operating condition (On/Off) of front RH ABS outlet solenoid.
REAR IN SOL (On/Off)	▼	×	Displays operating condition (On/Off) of rear ABS inlet solenoid.
REAR OUT SOL (On/Off)	▼	×	Displays operating condition (On/Off) of rear ABS outlet solenoid.

Item (Unit)	Monitor item selection		Remarks
	ECU INPUT SIGNALS	MAIN SIGNALS	
MOTOR RELAY (On/Off)	▼	×	Displays condition (On/Off) of ABS motor relay.
ACTUATOR RLY (On/Off)	▼	×	Displays condition (On/Off) of ABS actuator relay.
WARNING LAMP (On/Off)	▼	×	Displays ABS warning lamp control condition in control unit.
ABS SIGNAL (On/Off)	▼	▼	ABS operation
ABS FAIL SIG (On/Off)	▼	▼	ABS fail-safe signal

Active Test

INFOID:0000000005849163

TEST ITEM

Solenoid Valve

NOTE:

The example shown is for front right wheel. The procedure for the other wheels is the same as given below.

- For ABS solenoid valve, touch “Up”, “Keep”, and “Down” on the display screen. Make sure that solenoid valve operates as shown in solenoid valve operation chart.

Operation	ABS solenoid valve		
	Up	Keep	Down
FR RH IN SOL	Off	On	On
FR RH OUT SOL	Off	Off	On*

*: ON for 1 to 2 seconds after the touch, and then OFF

ABS motor

Touch “On” and “Off” on screen to check that ABS motor relay operates as shown in the following chart.

Operation	On	Off
MOTOR RELAY	On	Off
ACTUATOR RLY	On	On

Symptom Chart

INFOID:0000000005849164

If ABS warning lamp turn ON, perform self-diagnosis.

Symptom	Check item
Excessive ABS function operation frequency	Brake force distribution
	Looseness of front and rear axle
	Wheel sensor and sensor rotor system
Unexpected pedal reaction	Brake pedal stroke
	Make sure the braking force is sufficient when the ABS is not operating.
The braking distance is long	Check stopping distance when the ABS is not operating.
The ABS function does not operate	Wheel sensor
	The ABS does not operate when the speed 10 km/h (6 MPH) or less.
Pedal vibration or ABS operation sound occurs	Wheel sensor
	Under several conditions, when brake pedal is lightly depressed (just place a foot on it), ABS is activated and vibration is felt. However this is normal.

ABS warning lamp is not normal	ABS actuator and electric unit (control unit)
	Combination meter

C1101, C1102, C1103, C1104 WHEEL SENSOR

DTC Logic

INFOID:0000000005849165

DTC DETECTION LOGIC

DTC	Display item	Malfunction detected condition	Possible cause
C1101	RR RH SENSOR-1	When the circuit in the rear RH wheel sensor is open.	• Harness or connector • Wheel sensor • ABS actuator and electric unit (control unit) • Sensor rotor
C1102	RR LH SENSOR-1	When the circuit in the rear LH wheel sensor is open.	
C1103	FR RH SENSOR-1	When the circuit in the front RH wheel sensor is open.	
C1104	FR LH SENSOR-1	When the circuit in the front LH wheel sensor is open.	

DTC CONFIRMATION PROCEDURE

1. DTC REPRODUCTION PROCEDURE

1. Start the engine and drive the vehicle at 30 km/h (19 MPH) or more for approximately 1 minute.
2. Perform self-diagnosis for “ABS” with CONSULT-III.

Is DTC “C1101”, “C1102”, “C1103” or “C1104” detected?

YES >> Proceed to diagnosis procedure. Refer to BR-76, "Diagnosis Procedure".
NO >> INSPECTION END

Diagnosis Procedure

INFOID:0000000005849166

CAUTION:
Never check between wheel sensor harness connector terminals.

1. CHECK TIRES

Check air pressure, wear and size.

Is the inspection result normal?

YES >> GO TO 2.
NO >> Adjust air pressure or replace error-detected parts.

2. CHECK WHEEL SENSOR

Check wheel sensor for damage, disconnection or looseness.

Is the inspection result normal?

YES >> GO TO 3.
NO >> Repair wheel sensor mount or replace wheel sensor.

3. CHECK SENSOR ROTOR

Check sensor rotor for damage, disconnection or looseness.

Is the inspection result normal?

YES >> GO TO 4.
NO >> Repair wheel sensor mount or replace sensor rotor.

4. CHECK WHEEL SENSOR HARNESS

1. Check the continuity between ABS actuator and electric unit (control unit) harness connector and wheel sensor harness connector. (Also check continuity when steering wheel is turned right and left and when sensor harness inside the wheel house is moved.)

Measurement connector and terminal for power supply circuit

ABS actuator and electric unit (control unit)		Wheel sensor		Continuity
Connector	Terminal	Connector	Terminal	
E7	9	E31 (Front RH)	2	Existed
	16	E15 (Front LH)		
	8	BR3 (Rear RH)	1	
	6	BR4 (Rear LH)	3	

Measurement connector and terminal for signal circuit

ABS actuator and electric unit (control unit)		Wheel sensor		Continuity
Connector	Terminal	Connector	Terminal	
E7	10	E31 (Front RH)	1	Existed
	5	E15 (Front LH)		
	19	BR3 (Rear RH)	2	
	17	BR4 (Rear LH)	4	

2. Check the continuity between ABS actuator and electric unit (control unit) harness connector.

ABS actuator and electric unit (control unit)				Continuity
Connector	Terminal	Connector	Terminal	
E7	9, 10	E7	1, 4	Not existed
	16, 5			
	8, 19			
	6, 17			

Is the inspection result normal?

YES >> GO TO 5.
NO >> Repair or replace error-detected parts.

5. CHECK TERMINALS AND HARNESS CONNECTORS

1. Check ABS actuator and electric unit (control unit) pin terminals for damage or loose connection with harness connector.
2. Check each wheel sensor pin terminals for damage or loose connection with harness connector.

Is the inspection result normal?

YES >> GO TO 6.
NO >> Repair or replace error-detected parts.

6. REPLACE WHEEL SENSOR

1. Replace wheel sensor.
2. Erase self-diagnosis results for “ABS” with CONSULT-III.
3. Start the engine and drive the vehicle at 30 km/h (19 MPH) or more for approximately 1 minute.
4. Perform self-diagnosis for “ABS” with CONSULT-III.

Is DTC “C1101”, “C1102”, “C1103” or “C1104” detected?

YES >> Replace ABS actuator and electric unit (control unit). Refer to BR-97, "Exploded View"
NO >> INSPECTION END

C1105, C1106, C1107, C1108 WHEEL SENSOR

DTC Logic

INFOID:0000000005849167

DTC DETECTION LOGIC

DTC	Display item	Malfunction detected condition	Possible cause
C1105	RR RH SENSOR-2	When the circuit in the rear RH wheel sensor is short-circuited. Or when the sensor power voltage is outside the standard. When the distance between the wheel sensor and sensor rotor is too large and the sensor pulse cannot be recognized by the control unit.	• Harness or connector • Wheel sensor • ABS actuator and electric unit (control unit) • Sensor rotor
C1106	RR LH SENSOR-2	When the circuit in the rear LH wheel sensor is short-circuited. Or when the sensor power voltage is outside the standard. When the distance between the wheel sensor and sensor rotor is too large and the sensor pulse cannot be recognized by the control unit.	
C1107	FR RH SENSOR-2	When the circuit in the front RH wheel sensor is short-circuited. Or when the sensor power voltage is outside the standard. When the distance between the wheel sensor and sensor rotor is too large and the sensor pulse cannot be recognized by the control unit.	
C1108	FR LH SENSOR-2	When the circuit in the front LH wheel sensor is short-circuited. Or when the sensor power voltage is outside the standard. When the distance between the wheel sensor and sensor rotor is too large and the sensor pulse cannot be recognized by the control unit.	

DTC CONFIRMATION PROCEDURE

1. DTC REPRODUCTION PROCEDURE

1. Start the engine and drive the vehicle at 30 km/h (19 MPH) or more for approximately 1 minute.
2. Perform self-diagnosis for “ABS” with CONSULT-III.

Is DTC “C1105”, “C1106”, “C1107”, or “C1108” detected?

YES >> Proceed to diagnosis procedure. Refer to BR-78, "Diagnosis Procedure".
NO >> INSPECTION END

Diagnosis Procedure

INFOID:0000000005849168

CAUTION:
Never check between wheel sensor harness connector terminals.

1. CHECK TIRES

Check air pressure, wear and size.

Is the inspection result normal?

YES >> GO TO 2.
NO >> Adjust air pressure or replace error-detected parts.

2. CHECK WHEEL SENSOR

Check wheel sensor for damage, disconnection or looseness.

Is the inspection result normal?

YES >> GO TO 3.
NO >> Repair wheel sensor mount or replace wheel sensor.

3. CHECK SENSOR ROTOR

Check sensor rotor for damage, disconnection or looseness.

Is the inspection result normal?

YES >> GO TO 4.
NO >> Repair wheel sensor mount or replace sensor rotor.

4. CHECK WHEEL SENSOR HARNESS

1. Check the continuity between ABS actuator and electric unit (control unit) harness connector and wheel sensor harness connector. (Also check continuity when steering wheel is turned right and left and when sensor harness inside the wheel house is moved.)

Measurement connector and terminal for power supply circuit

ABS actuator and electric unit (control unit)		Wheel sensor		Continuity
Connector	Terminal	Connector	Terminal	
E7	9	E31 (Front RH)	2	Existed
	16	E15 (Front LH)		
	8	BR3 (Rear RH)	1	
	6	BR4 (Rear LH)	3	

Measurement connector and terminal for signal circuit

ABS actuator and electric unit (control unit)		Wheel sensor		Continuity
Connector	Terminal	Connector	Terminal	
E7	10	E31 (Front RH)	1	Existed
	5	E15 (Front LH)		
	19	BR3 (Rear RH)	2	
	17	BR4 (Rear LH)	4	

2. Check the continuity between ABS actuator and electric unit (control unit) harness connector.

ABS actuator and electric unit (control unit)				Continuity
Connector	Terminal	Connector	Terminal	
E7	9, 10	E7	1, 4	Not existed
	16, 5			
	8, 19			
	6, 17			

Is the inspection result normal?

YES >> GO TO 5.
NO >> Repair or replace error-detected parts.

5. CHECK TERMINALS AND HARNESS CONNECTORS

1. Check ABS actuator and electric unit (control unit) pin terminals for damage or loose connection with harness connector.
2. Check each wheel sensor pin terminals for damage or loose connection with harness connector.

Is the inspection result normal?

YES >> GO TO 6.
NO >> Repair or replace error-detected parts.

6. REPLACE WHEEL SENSOR

1. Replace wheel sensor.
2. Erase self-diagnosis results for “ABS” with CONSULT-III.
3. Start the engine and drive the vehicle at 30 km/h (19 MPH) or more for approximately 1 minute.
4. Perform self-diagnosis for “ABS” with CONSULT-III.

Is DTC “C1105”, “C1106”, “C1107” or “C1108” detected?

YES >> Replace ABS actuator and electric unit (control unit). Refer to BR-97, "Exploded View"
NO >> INSPECTION END

C1109 POWER AND GROUND SYSTEM

Description

INFOID:0000000005849169

Supplies electric power to the ABS actuator and electric unit (control unit).

DTC Logic

INFOID:0000000005849170

DTC DETECTION LOGIC

DTC	Display item	Malfunction detected condition	Possible cause
C1109	BATTERY VOLTAGE [ABNORMAL]	When the ABS actuator and electric unit (control unit) power voltage is lower than normal.	• Harness or connector • ABS actuator and electric unit (control unit) • Fuse

DTC CONFIRMATION PROCEDURE

1. DTC REPRODUCTION PROCEDURE

1. Turn the ignition switch ON.
2. Perform self-diagnosis for “ABS” with CONSULT-III.

Is DTC “C1109” detected?

YES >> Proceed to diagnosis procedure. Refer to BR-80, "Diagnosis Procedure".
NO >> INSPECTION END

Diagnosis Procedure

INFOID:0000000005849171

1. CHECK ABS ACTUATOR AND ELECTRIC UNIT (CONTROL UNIT) POWER SUPPLY

1. Turn the ignition switch OFF.
2. Disconnect ABS actuator and electric unit (control unit) harness connector.
3. Check the voltage between ABS actuator and electric unit (control unit) harness connector and ground.

ABS actuator and electric unit (control unit)		—	Voltage
Connector	Terminal		
E7	18	Ground	Approx. 0 V

4. Turn the ignition switch ON.
   CAUTION:
   Never start the engine.
5. Check the voltage between ABS actuator and electric unit (control unit) harness connector and ground.

ABS actuator and electric unit (control unit)		—	Voltage
Connector	Terminal		
E7	18	Ground	Battery voltage

Is the inspection result normal?

YES >> GO TO 4.
NO >> GO TO 2.

2. CHECK ABS ACTUATOR AND ELECTRIC UNIT (CONTROL UNIT) POWER SUPPLY CIRCUIT

1. Turn the ignition switch OFF.
2. Check 10 A fuse (#11 and #12).

Is the inspection result normal?

YES >> Perform the trouble diagnosis for ignition power supply circuit.
NO >> GO TO 3.

3. CHECK COMBINATION METER CIRCUIT

1. Disconnect combination meter harness connector.

2. Check continuity between ABS actuator and electric unit (control unit) harness connector and combination meter harness connector.

ABS actuator and electric unit (control unit)		Combination meter		Continuity
Connector	Terminal	Connector	Terminal	
E7	12	N18*1 N4*2 N10*3	54*1 10*2 31*3	Existed

*1: For Europe and Russia
*2: Except for Europe and Russia with tachometer
*3: Except for Europe and Russia without tachometer

Is the inspection result normal?

YES >> Perform the trouble diagnosis for combination meter.
NO >> Repair or replace error-detected parts.

4. CHECK ABS ACTUATOR AND ELECTRIC UNIT (CONTROL UNIT) GROUND

Check continuity between ABS actuator and electric unit (control unit) harness connector and ground.

ABS actuator and electric unit (control unit)		—	Continuity
Connector	Terminal		
E7	1	Ground	Existed
	4		

Is the inspection result normal?

YES >> GO TO 5.
NO >> Repair or replace error-detected parts.

5. CHECK TERMINALS AND HARNESS CONNECTORS

Check ABS actuator and electric unit (control unit) pin terminals for damage or loose connection with harness connector.

Is the inspection result normal?

YES >> Replace ABS actuator electric unit (control unit). Refer to BR-97, "Exploded View".
NO >> Repair or replace error-detected parts.

C1110 ABS ACTUATOR AND ELECTRIC UNIT (CONTROL UNIT)

DTC Logic

INFOID:0000000005849172

DTC DETECTION LOGIC

DTC	Display item	Malfunction detected condition	Possible cause
C1110	CONTROLLER FAILURE	When there is an internal malfunction in the ABS actuator and electric unit (control unit).	ABS actuator and electric unit (control unit)

DTC CONFIRMATION PROCEDURE

1. DTC REPRODUCTION PROCEDURE

1. Turn the ignition switch ON.
2. Perform self-diagnosis for “ABS” with CONSULT-III.

Is DTC “C1110” detected?

YES >> Proceed to diagnosis procedure. Refer to BR-82, "Diagnosis Procedure".
NO >> INSPECTION END

Diagnosis Procedure

INFOID:0000000005849173

1. REPLACE ABS ACTUATOR AND ELECTRIC UNIT (CONTROL UNIT)

CAUTION:
Replace ABS actuator and electric unit (control unit) when self-diagnostic result shows items other than those applicable.

>> Replace ABS actuator and electric unit (control unit). Refer to BR-97, "Exploded View".

C1111 ABS MOTOR, MOTOR RELAY SYSTEM

DTC Logic

INFOID:0000000005849174

DTC DETECTION LOGIC

DTC	Display item	Malfunction detected condition	Possible cause
C1111	PUMP MOTOR	During actuator motor operation with ON, when actuator motor turns OFF or when control line for actuator motor relay is open.	• Harness or connector • ABS actuator and electric unit (control unit)

DTC CONFIRMATION PROCEDURE

1. DTC REPRODUCTION PROCEDURE

1. Turn the ignition switch ON.
2. Perform self-diagnosis for “ABS” with CONSULT-III.

Is DTC “C1111” detected?

YES >> Proceed to diagnosis procedure. Refer to BR-83, "Diagnosis Procedure".
NO >> INSPECTION END

Diagnosis Procedure

INFOID:0000000005849175

1. CHECK ABS MOTOR AND MOTOR RELAY POWER SUPPLY

1. Turn the ignition switch OFF.
2. Disconnect ABS actuator and electric unit (control unit) harness connector.
3. Check the 40 A fuse (g).
4. Check voltage between the ABS actuator and electric unit (control unit) harness connector and ground.

ABS actuator and electric unit (control unit)		—	Voltage
Connector	Terminal		
E7	2	Ground	Battery voltage

Is the inspection result normal?

YES >> GO TO 2.
NO >> Repair or replace error-detected parts.

2. CHECK ABS ACTUATOR AND ELECTRIC UNIT (CONTROL UNIT) GROUND

Check continuity between ABS actuator and electric unit (control unit) harness connector and ground.

ABS actuator and electric unit (control unit)		—	Continuity
Connector	Terminal		
E7	1	Ground	Existed
	4		

Is the inspection result normal?

YES >> GO TO 3.
NO >> Repair or replace error-detected parts.

3. CHECK TERMINALS AND HARNESS CONNECTOR

Check ABS actuator and electric unit (control unit) pin terminals for damage or loose connection with harness connector.

Is the inspection result normal?

YES >> Replace ABS actuator and electric unit (control unit). Refer to BR-97, "Exploded View".
NO >> Repair or replace error-detected parts.

C1113 G SENSOR

DTC Logic

INFOID:0000000005849176

DTC DETECTION LOGIC

DTC	Display item	Malfunction detected condition	Possible cause
C1113	G SENSOR	G sensor is malfunctioning, or circuit of side G sensor is open or shorted.	• Harness or connector • ABS actuator and electric unit (control unit) • G sensor

DTC CONFIRMATION PROCEDURE

1. DTC REPRODUCTION PROCEDURE

1. Turn the ignition switch ON.
2. Perform self-diagnosis for “ABS” with CONSULT-III.

Is DTC “C1113” detected?

YES >> Proceed to diagnosis procedure. Refer to BR-84, "Diagnosis Procedure".
NO >> INSPECTION END

Diagnosis Procedure

INFOID:0000000005849177

INSPECTION PROCEDURE

1. CHECK G SENSOR CIRCUIT

1. Turn the ignition switch OFF.
2. Disconnect G sensor harness connector.
3. Disconnect ABS actuator and electric unit (control unit) harness connector.
4. Check continuity between G sensor harness connector and ABS actuator and electric unit (control unit) harness connector.

G sensor		ABS actuator and electric unit (control unit)		Continuity
Connector	Terminal	Connector	Terminal	
M102	1	E7	24	Existed
	2		21	
	3		14	

Is the inspection result normal?

YES >> GO TO 2.
NO >> Repair or replace error-detected parts.

2. CHECK TERMINALS AND HARNESS CONNECTORS

1. Check G sensor pin terminals for damage or loose connection with harness connector.
2. Check ABS actuator and electric unit (control unit) pin terminals for damage or loose connection with harness connector.

Is the inspection result normal?

YES >> GO TO 3.
NO >> Repair or replace error-detected parts.

3. REPLACE G SENSOR

1. Replace G sensor. Refer to BR-98, "Exploded View".
2. Erase self-diagnosis results for “ABS” with CONSULT-III.
3. Turn the ignition switch OFF.
4. Turn the ignition switch ON.
   CAUTION:
   Never start the engine.
5. Perform self-diagnosis for “ABS” with CONSULT-III.

Is DTC “C1113” detected?

YES >> Replace ABS actuator and electric unit (control unit). Refer to BR-97, "Exploded View".
NO >> INSPECTION END

C1114 ACTUATOR RELAY SYSTEM

DTC Logic

INFOID:0000000005849178

DTC DETECTION LOGIC

DTC	Display item	Malfunction detected condition	Possible cause
C1114	ACTUATOR RLY	When the control unit detects a malfunction in the actuator relay system.	• Harness or connector • ABS actuator and electric unit (control unit)

DTC CONFIRMATION PROCEDURE

1. DTC REPRODUCTION PROCEDURE

1. Turn the ignition switch ON.
2. Perform self-diagnosis for “ABS” with CONSULT-III.

Is DTC “C1114” detected?

YES >> Proceed to diagnosis procedure. Refer to BR-86, "Diagnosis Procedure".
NO >> INSPECTION END

Diagnosis Procedure

INFOID:0000000005849179

1. CHECK ACTUATOR RELAY POWER SUPPLY

1. Turn the ignition switch OFF.
2. Disconnect ABS actuator and electric unit (control unit) harness connector.
3. Check the 30 A fuse (h).
4. Check voltage between ABS actuator and electric unit (control unit) harness connector and ground.

ABS actuator and electric unit (control unit)		—	Voltage
Connector	Terminal		
E7	3	Ground	Battery voltage

Is the inspection result normal?

YES >> GO TO 2.
NO >> Repair or replace error-detected parts.

2. CHECK ACTUATOR RELAY GROUND

Check continuity between ABS actuator and electric unit (control unit) harness connector and ground.

ABS actuator and electric unit (control unit)		—	Continuity
Connector	Terminal		
E7	1	Ground	Existed
	4		

Is the inspection result normal?

YES >> GO TO 3.
NO >> Repair or replace error-detected parts.

3. CHECK TERMINALS AND HARNESS CONNECTOR

Check ABS actuator and electric unit (control unit) pin terminals for damage or loose connection with harness connector.

Is the inspection result normal?

YES >> Replace ABS actuator and electric unit (control unit). Refer to BR-97, "Exploded View".
NO >> Repair or replace error-detected parts.

C1115 WHEEL SENSOR

DTC Logic

INFOID:0000000005849180

DTC DETECTION LOGIC

DTC	Display item	Malfunction detected condition	Possible cause
C1115	ABS SENSOR [ABNORMAL SIGNAL]	Wheel sensor input has generated a malfunction.	• Harness or connector • Wheel sensor • ABS actuator and electric unit (control unit) • Sensor rotor

DTC CONFIRMATION PROCEDURE

1. DTC REPRODUCTION PROCEDURE

1. Start the engine and drive the vehicle at 30 km/h (19 MPH) or more for approximately 1 minute.
2. Perform self-diagnosis for “ABS” with CONSULT-III.

Is DTC “C1115” detected?

YES >> Proceed to diagnosis procedure. Refer to BR-87, "Diagnosis Procedure".
NO >> INSPECTION END

Diagnosis Procedure

INFOID:0000000005849181

CAUTION:
Never check between wheel sensor harness connector terminals.

1. CHECK TIRES

Check air pressure, wear and size.

Is the inspection result normal?

YES >> GO TO 2.
NO >> Adjust air pressure or replace error-detected parts.

2. CHECK WHEEL SENSOR

Check wheel sensor for damage, disconnection or looseness.

Is the inspection result normal?

YES >> GO TO 3.
NO >> Repair wheel sensor mount or replace wheel sensor.

3. CHECK SENSOR ROTOR

Check sensor rotor for damage, disconnection or looseness.

Is the inspection result normal?

YES >> GO TO 4.
NO >> Repair wheel sensor mount or replace sensor rotor.

4. CHECK WHEEL SENSOR HARNESS

1. Check the continuity between ABS actuator and electric unit (control unit) harness connector and wheel sensor harness connector. (Also check continuity when steering wheel is turned right and left and when sensor harness inside the wheel house is moved.)

Measurement connector and terminal for power supply circuit

ABS actuator and electric unit (control unit)		Wheel sensor		Continuity
Connector	Terminal	Connector	Terminal	
E7	9	E31 (Front RH)	2	Existed
	16	E15 (Front LH)		
	8	BR3 (Rear RH)	1	
	6	BR4 (Rear LH)	3	

Measurement connector and terminal for signal circuit

ABS actuator and electric unit (control unit)		Wheel sensor		Continuity
Connector	Terminal	Connector	Terminal	
E7	10	E31 (Front RH)	1	Existed
	5	E15 (Front LH)		
	19	BR3 (Rear RH)	2	
	17	BR4 (Rear LH)	4	

2. Check the continuity between ABS actuator and electric unit (control unit) harness connector.

ABS actuator and electric unit (control unit)				Continuity
Connector	Terminal	Connector	Terminal	
E7	9, 10	E7	1, 4	Not existed
	16, 5			
	8, 19			
	6, 17			

Is the inspection result normal?

YES >> GO TO 5.
NO >> Repair or replace error-detected parts.

5. CHECK TERMINALS AND HARNESS CONNECTORS

1. Check ABS actuator and electric unit (control unit) pin terminals for damage or loose connection with harness connector.
2. Check each wheel sensor pin terminals for damage or loose connection with harness connector.

Is the inspection result normal?

YES >> GO TO 6.
NO >> Repair or replace error-detected parts.

6. REPLACE WHEEL SENSOR

1. Replace wheel sensor.
2. Erase self-diagnosis results for “ABS” with CONSULT-III.
3. Start the engine and drive the vehicle at 30 km/h (19 MPH) or more for approximately 1 minute.
4. Perform self-diagnosis for “ABS” with CONSULT-III.

Is DTC “C1115” detected?

YES >> Replace ABS actuator and electric unit (control unit). Refer to BR-97, "Exploded View"
NO >> INSPECTION END

C1116 STOP LAMP SWITCH

DTC Logic

INFOID:0000000005849182

DTC DETECTION LOGIC

DTC	Display item	Malfunction detected condition	Possible cause
C1116	STOP LAMP SW	When a stop lamp switch signal is not input where the brake pedal is depressed.	• Harness or connector • Stop lamp switch • ABS actuator and electric unit (control unit)

DTC CONFIRMATION PROCEDURE

1. DTC REPRODUCTION PROCEDURE

1. Turn the ignition switch ON.
2. Perform self-diagnosis for “ABS” with CONSULT-III.

Is DTC “C1116” detected?

YES >> Proceed to diagnosis procedure. Refer to BR-89, "Diagnosis Procedure".
NO >> INSPECTION END

Diagnosis Procedure

INFOID:0000000005849183

1. CHECK CONNECTOR

1. Turn the ignition switch OFF.
2. Disconnect ABS actuator and electric unit (control unit) harness connector.
3. Disconnect stop lamp switch harness connector.
4. Check terminal for deformation, disconnection, looseness, etc.
5. Reconnect ABS actuator and electric unit (control unit) and stop lamp switch connectors securely.
6. Start the engine.
7. Repeat pumping brake pedal carefully several times, and perform self-diagnosis for “ABS” with CONSULT-III.

Is the inspection result normal?

YES >> GO TO 2.
NO >> Poor connection of connector terminal. Repair or replace error-detected parts.

2. CHECK STOP LAMP SWITCH CLEARANCE

Check stop lamp switch clearance.

Is the inspection result normal?

YES >> GO TO 3.
NO >> Adjust stop lamp clearance.

3. CHECK STOP LAMP SWITCH SIGNAL

1. Turn the ignition switch OFF.
2. Disconnect ABS actuator and electric unit (control unit) harness connector.
3. Check voltage between ABS actuator and electric unit (control unit) harness connector and ground.

ABS actuator and electric unit (control unit)		Condition	Voltage
Connector	Terminal		
E7	20	Brake pedal is depressed	Battery voltage
		Brake pedal is released	Approx. 0 V

Is the inspection result normal?

YES >> Replace ABS actuator and electric unit (control unit). Refer to BR-97, "Exploded View".
NO >> GO TO 4.

4. CHECK STOP LAMP SWITCH

Check stop lamp switch. Refer to BR-41, "Component Inspection".

Is the inspection result normal?

YES >> GO TO 5.
NO >> Repair stop lamp switch.

5. CHECK STOP LAMP SWITCH CIRCUIT (1)

1. Check continuity between ABS actuator electric unit (control unit) harness connector and stop lamp switch harness connector.

ABS actuator electric unit (control unit)		Stop lamp switch		Continuity
Connector	Terminal	Connector	Terminal	Existed
E7	20	M16	2	

2. Check continuity between ABS actuator electric unit (control unit) harness connector and ground.

ABS actuator electric unit (control unit)		—	Continuity
Connector	Terminal		
E7	20	Ground	No existed

Is the inspection result normal?

YES >> GO TO 6.
NO >> Repair or replace error-detected parts.

6. CHECK STOP LAMP SWITCH CIRCUIT (2)

1. Check voltage between stop lamp switch harness connector and ground.

Stop lamp switch		—	Voltage
Connector	Terminal		
M16	1	Ground	Battery voltage

Is the inspection result normal?

YES >> Perform the trouble diagnosis for power supply circuit.
NO >> Repair or replace error-detected parts.

Component Inspection

INFOID:0000000005849184

1. CHECK STOP LAMP SWITCH

1. Turn the ignition switch OFF.
2. Disconnect stop lamp switch harness connector.
3. Check continuity between stop lamp switch harness connector terminals.

Stop lamp switch	Condition	Continuity
Terminal		
1 – 2	When brake pedal is depressed.	Existed
	When brake pedal is released.	Not existed

Is the inspection result normal?

YES >> INSPECTION END
NO >> Replace stop lamp switch.

C1120, C1122, C1190 IN ABS SOL

DTC Logic

INFOID:0000000005849185

DTC DETECTION LOGIC

DTC	Display item	Malfunction detected condition	Possible cause
C1120	FR LH IN ABS SOL	When the control unit detects a malfunction in the front left inlet solenoid system.	• Harness or connector • ABS actuator and electric unit (control unit)
C1122	FR RH IN ABS SOL	When the control unit detects a malfunction in the front right inlet solenoid system.	
C1190	REAR IN ABS SOL	When the control unit detects a malfunction in the rear inlet solenoid system.	

DTC CONFIRMATION PROCEDURE

1. DTC REPRODUCTION PROCEDURE

1. Turn the ignition switch ON.
2. Perform self-diagnosis for “ABS” with CONSULT-III.

Is DTC “C1120”, “C1122” or “C1190” detected?

YES >> Proceed to diagnosis procedure. Refer to BR-91, "Diagnosis Procedure".
NO >> INSPECTION END

Diagnosis Procedure

INFOID:0000000005849186

1. CHECK SOLENOID POWER SUPPLY

1. Turn the ignition switch OFF.
2. Disconnect ABS actuator and electric unit (control unit) harness connector.
3. Check the 30 A fuse (h).
4. Check voltage between ABS actuator and electric unit (control unit) harness connector and ground.

ABS actuator and electric unit (control unit)		—	Voltage
Connector	Terminal		
E7	3	Ground	Battery voltage

Is the inspection result normal?

YES >> GO TO 2.
NO >> Repair or replace error-detected parts.

2. CHECK SOLENOID GROUND

Check continuity between ABS actuator and electric unit (control unit) harness connector and ground.

ABS actuator and electric unit (control unit)		—	Continuity
Connector	Terminal		
E7	1	Ground	Existed
	4		

Is the inspection result normal?

YES >> GO TO 3.
NO >> Repair or replace error-detected parts.

3. CHECK TERMINALS AND HARNESS CONNECTOR

Check ABS actuator and electric unit (control unit) pin terminals for damage or loose connection with harness connector.

Is the inspection result normal?

YES >> Replace ABS actuator and electric unit (control unit). Refer to BR-97, "Exploded View".

NO >> Repair or replace error-detected parts.

C1121, C1123, C1191 OUT ABS SOL

DTC Logic

INFOID:0000000005849187

DTC DETECTION LOGIC

DTC	Display item	Malfunction detected condition	Possible cause
C1121	FR LH OUT ABS SOL	When the control unit detects a malfunction in the front left outlet solenoid system.	• Harness or connector • ABS actuator and electric unit (control unit)
C1123	FR RH OUT ABS SOL	When the control unit detects a malfunction in the front right outlet solenoid system.	
C1191	RR LH OUT ABS SOL	When the control unit detects a malfunction in the rear outlet solenoid system.	

DTC CONFIRMATION PROCEDURE

1. DTC REPRODUCTION PROCEDURE

1. Turn the ignition switch ON.
2. Perform self-diagnosis for “ABS” with CONSULT-III.

Is DTC “C1121”, “C1123” or “C1191” detected?

YES >> Proceed to diagnosis procedure. Refer to BR-93, "Diagnosis Procedure".
NO >> INSPECTION END

Diagnosis Procedure

INFOID:0000000005849188

1. CHECK SOLENOID POWER SUPPLY

1. Turn the ignition switch OFF.
2. Disconnect ABS actuator and electric unit (control unit) harness connector.
3. Check the 30 A fuse (h).
4. Check voltage between ABS actuator and electric unit (control unit) harness connector and ground.

ABS actuator and electric unit (control unit)		—	Voltage
Connector	Terminal		
E7	3	Ground	Battery voltage

Is the inspection result normal?

YES >> GO TO 2.
NO >> Repair or replace error-detected parts.

2. CHECK SOLENOID GROUND

Check continuity between ABS actuator and electric unit (control unit) harness connector and ground.

ABS actuator and electric unit (control unit)		—	Continuity
Connector	Terminal		
E7	1	Ground	Existed
	4		

Is the inspection result normal?

YES >> GO TO 3.
NO >> Repair or replace error-detected parts.

3. CHECK TERMINALS AND HARNESS CONNECTOR

Check ABS actuator and electric unit (control unit) pin terminals for damage or loose connection with harness connector.

Is the inspection result normal?

YES >> Replace ABS actuator and electric unit (control unit). Refer to BR-97, "Exploded View".

NO >> Repair or replace error-detected parts.

WHEEL SENSOR

Exploded View

INFOID:0000000005849189

FRONT

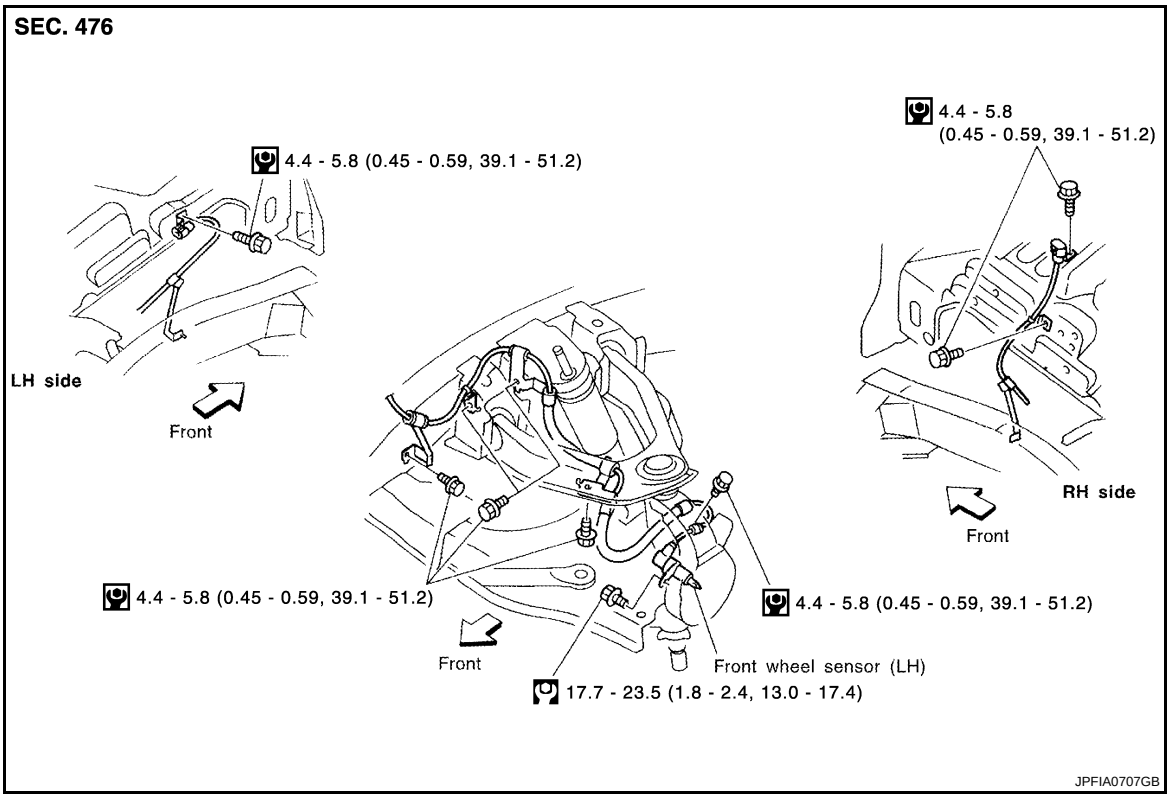

: N·m (kg-m, ft-lb)

: N·m (kg-m, in-lb)

REAR

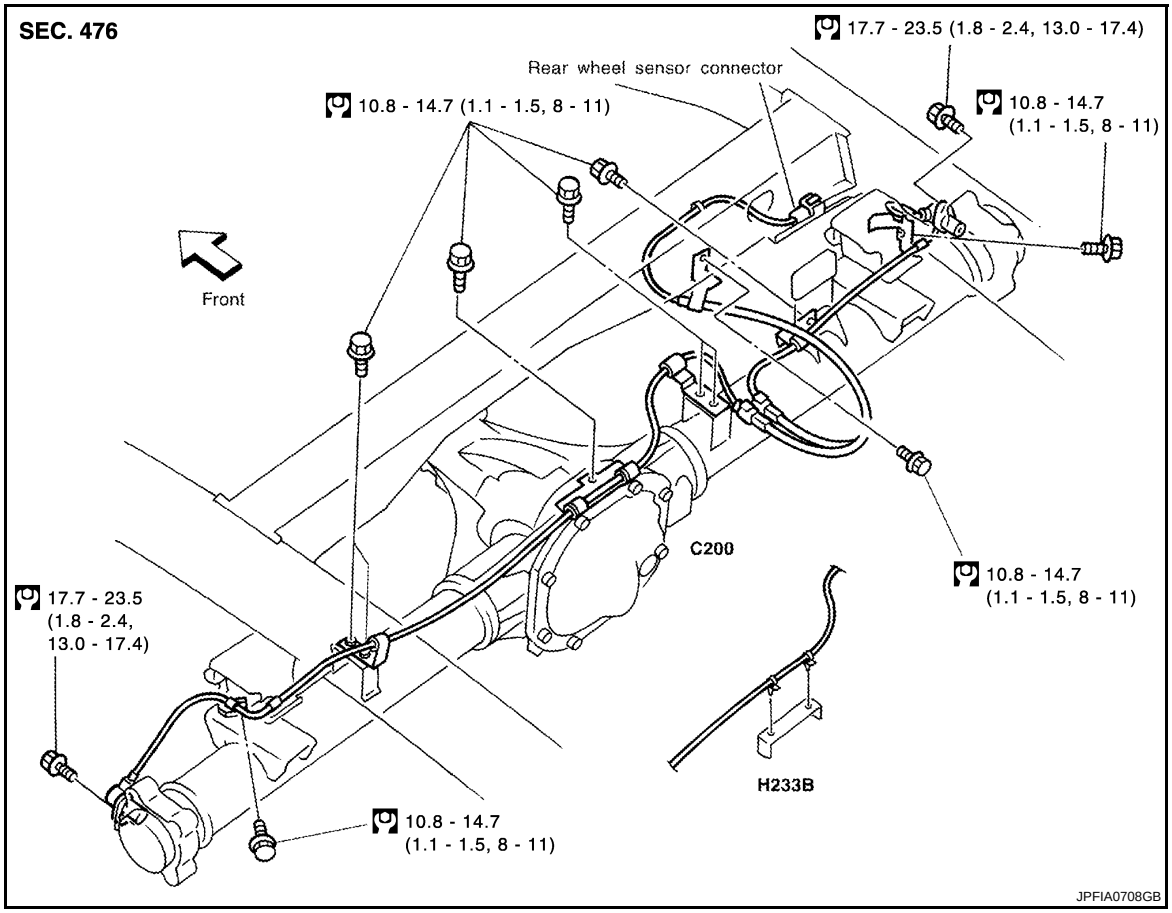

: N·m (kg-m, ft-lb)

Removal and Installation

INFOID:0000000005849190

CAUTION:

Be careful not to damage sensor edge and sensor rotor teeth. When removing the front wheel hub or rear axle shaft assembly, disconnect the ABS wheel sensor from the assembly and move it away.

ACTUATOR AND ELECTRIC UNIT

Exploded View

INFOID:0000000005849191

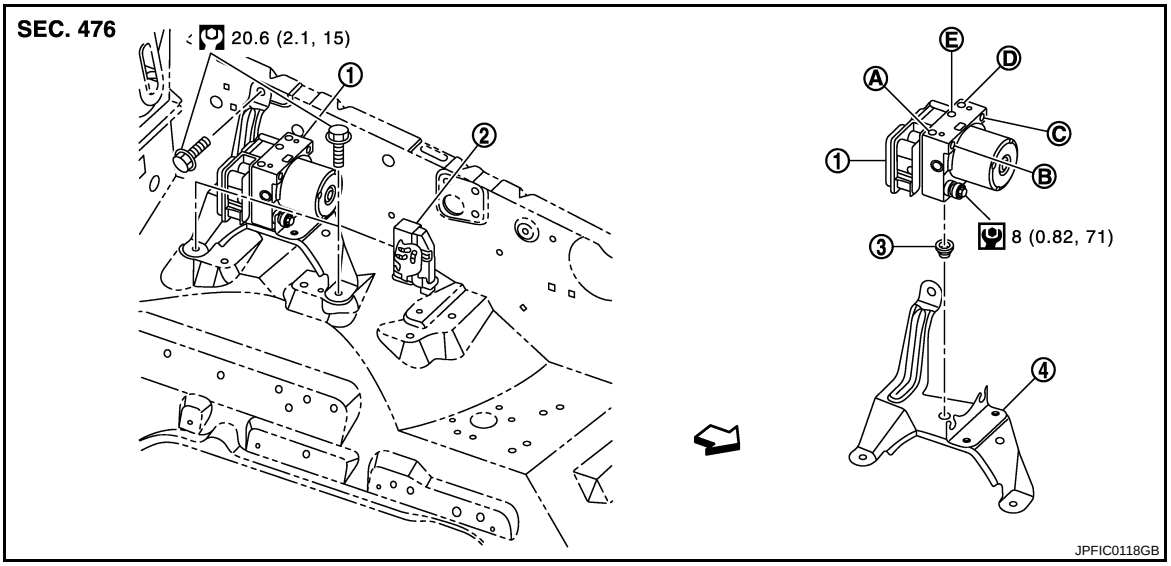

1.	ABS actuator and electric unit (control unit)	2.	ABS actuator and electric unit (control unit) harness connector	3.	Bushing
4.	Bracket				
A.	To rear wheel cylinder	B.	From master cylinder secondary side	C.	From master cylinder primary side
D.	To front LH brake caliper	E.	To front RH brake caliper		

⇦: Vehicle front

: N·m (kg-m, ft-lb)

: N·m (kg-m, ft-in)

Removal and Installation

INFOID:0000000005849192

REMOVAL

1. Disconnect battery cable.
2. Drain brake fluid.
3. Remove mounting bracket fixing bolts and nuts.
4. Disconnect ABS actuator and electric unit (control unit) harness connector, brake pipes and remove fixing nuts.

INSTALLATION

CAUTION:

After installation, refill brake fluid. Then bleed air.

1. Connect brake pipes temporarily.
2. Tighten fixing bolts and nuts.
3. Tighten brake pipes.
4. Connect connector and battery cable.

G SENSOR

Exploded View

INFOID:0000000005849193

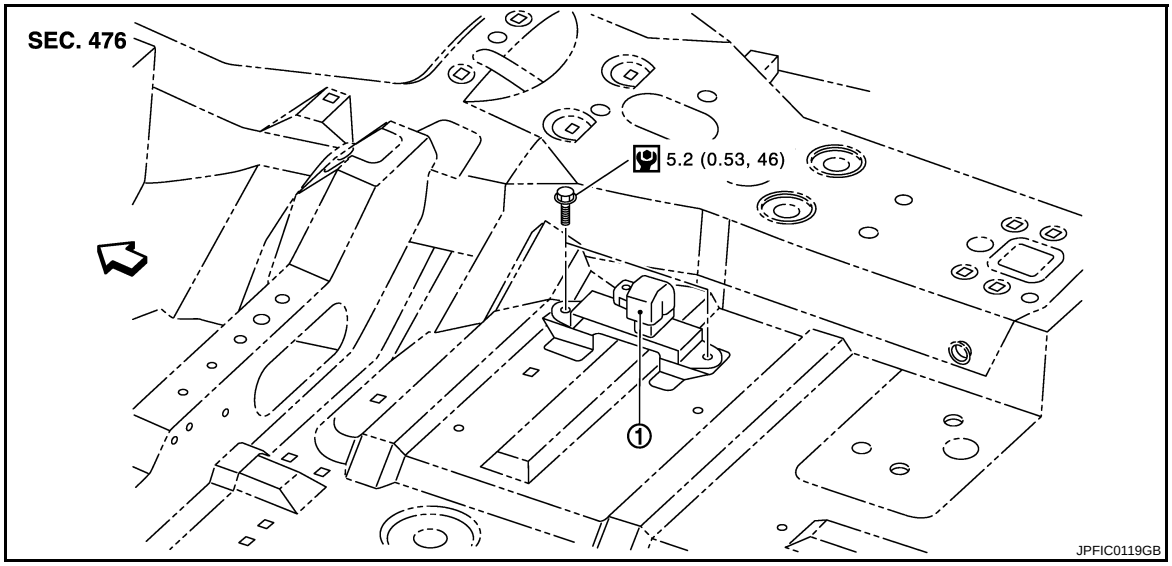

1. G sensor

⇦: Vehicle front

: N·m (kg-m, ft-in)

Removal and Installation

INFOID:0000000005849194

Always replace G sensor if bumped or dropped. Otherwise, performance characteristics of G sensor will be changed, which in turn changes ABS control performance characteristics.