SECTION EC
ENGINE CONTROL SYSTEM

CONTENTS

YD25DDTi

SERVICE INFORMATION 6

MODIFICATION NOTICE 6
Major Modification Item 6

INDEX FOR DTC 7
U1000 7
P0016 - P0123 7
P0182 - P0217 7
P0222 - P0488 8
P0563 - P0686 8
P1268 - P1275 9
P1610 - P1616 9
P1622 - P2229 9

PRECAUTIONS 11
Precaution for Supplemental Restraint System (SRS) "AIR BAG" and "SEAT BELT PRE-TENSIONER" 11
Precaution for Procedure without Cowl Top Cover...11
On Board Diagnosis (OBD) System of Engine 11
Precaution 12

PREPARATION 15
Special Service Tool 15
Commercial Service Tool 16

ENGINE CONTROL SYSTEM 17
Schematic 17
System Chart 18
Fuel Injection Control System 18
Fuel Injection Timing Control System 20
Air Conditioning Cut Control 20
Fuel Cut Control (At No Load & High Engine Speed) 20
Crankcase Ventilation System 20
CAN Communication 21

BASIC SERVICE PROCEDURE 22
Fuel Filter 22
Procedure After Replacing ECM 22
Injector Adjustment Value Registration 22
Fuel Pump Learning Value Clearing 23
EGR Volume Control Valve Closed Position Learning Value Clear 24
EGR Volume Control Valve Closed Position Learning 24
FUEL PUMP 24

ON BOARD DIAGNOSTIC (OBD) SYSTEM 32
Introduction 32
Three Trip Detection Logic and One Trip Detection Logic 32
Emission-Related Diagnostic Information 32
NATS (Nissan Anti-Theft System) 36
Malfunction Indicator (MI) 36
OBD System Operation Chart 38

TROUBLE DIAGNOSIS 41
Trouble Diagnosis Introduction 41
DTC Inspection Priority Chart 44
Basic Inspection 45
Symptom Matrix Chart 48
Engine Control Component Parts Location 52
Circuit Diagram 55
ECM Harness Connector Terminal Layout 57
ECM Terminal and Reference Value 57
CONSULT-III Function (ENGINE) 63
Generic Scan Tool (GST) Function 67
CONSULT-III Reference Value in Data Monitor Mode 68

TROUBLE DIAGNOSIS FOR INTERMITTENT INCIDENT 70
Description 70
Diagnosis Procedure 70

POWER SUPPLY AND GROUND CIRCUIT 71
Wiring Diagram 71
Diagnosis Procedure 78
Component Inspection 81

Ground Inspection 81

DTC U1000 CAN COMMUNICATION LINE 83
Description 83
On Board Diagnosis Logic 83
DTC Confirmation Procedure 83
Wiring Diagram 84
Diagnosis Procedure 84

DTC P0016 CKP - CMP CORRELATION 85
On Board Diagnosis Logic 85
DTC Confirmation Procedure 85
Diagnosis Procedure 85

DTC P0088 FUEL SYSTEM 87
On Board Diagnosis Logic 87
DTC Confirmation Procedure 87
Diagnosis Procedure 87
Removal and Installation 88

DTC P0089 FUEL PUMP 89
On Board Diagnosis Logic 89
DTC Confirmation Procedure 89
Diagnosis Procedure 89
Removal and Installation 90

DTC P0093 FUEL SYSTEM 91
On Board Diagnosis Logic 91
Overall Function Check 91
Diagnosis Procedure 92
Component Inspection 92
Removal and Installation 93

DTC P0101 MAF SENSOR 94
Component Description 94
CONSULT-III Reference Value in Data Monitor Mode 94
On Board Diagnosis Logic 94
DTC Confirmation Procedure 94
Wiring Diagram 96
Diagnosis Procedure 99
Component Inspection 101
Removal and Installation 102

DTC P0102, P0103 MAF SENSOR 103
Component Description 103
CONSULT-III Reference Value in Data Monitor Mode 103
On Board Diagnosis Logic 103
DTC Confirmation Procedure 103
Wiring Diagram 104
Diagnosis Procedure 107
Component Inspection 109
Removal and Installation 110

DTC P0112, P0113 IAT SENSOR 111
Component Description 111
On Board Diagnosis Logic 111
DTC Confirmation Procedure 111
Wiring Diagram 112
Diagnosis Procedure 112
Component Inspection 114
Removal and Installation 114

DTC P0117, P0118 ECT SENSOR 115
Description 115
On Board Diagnosis Logic 115
DTC Confirmation Procedure 115
Wiring Diagram 116
Diagnosis Procedure 116
Component Inspection 118
Removal and Installation 118

DTC P0122, P0123 APP SENSOR 119
Description 119
CONSULT-III Reference Value in Data Monitor Mode 119
On Board Diagnosis Logic 119
DTC Confirmation Procedure 119
Wiring Diagram 120
Diagnosis Procedure 121
Component Inspection 123
Removal and Installation 123

DTC P0182, P0183 FUEL PUMP TEMPERATURE SENSOR 124
Description 124
CONSULT-III Reference Value in Data Monitor Mode 124
On Board Diagnosis Logic 124
DTC Confirmation Procedure 124
Wiring Diagram 125
Diagnosis Procedure 125
Removal and Installation 127

DTC P0192, P0193 FRP SENSOR 128
Description 128
CONSULT-III Reference Value in Data Monitor Mode 128
On Board Diagnosis Logic 128
DTC Confirmation Procedure 128
Wiring Diagram 129
Diagnosis Procedure 130
Component Inspection 131
Removal and Installation 131

DTC P0200 FUEL INJECTOR 132
On Board Diagnosis Logic 132
DTC Confirmation Procedure 132
Diagnosis Procedure 132

DTC P0201 - P0204 FUEL INJECTOR 133
Component Description 133
CONSULT-III Reference Value in Data Monitor Mode 133
On Board Diagnosis Logic 133
DTC Confirmation Procedure 133
Wiring Diagram 134
Diagnosis Procedure 136
Component Inspection 137
Removal and Installation 137

DTC P0217 ENGINE OVER TEMPERATURE. 138
Description 138
CONSULT-III Reference Value in Data Monitor Mode 138
On Board Diagnosis Logic 138
Overall Function Check 139
Wiring Diagram 141
Diagnosis Procedure 141
Main 12 Causes of Overheating 145
Component Inspection 145

DTC P0222, P0223 APP SENSOR 147
Description 147
CONSULT-III Reference Value in Data Monitor Mode 147
On Board Diagnosis Logic 147
DTC Confirmation Procedure 147
Wiring Diagram 148
Diagnosis Procedure 149
Component Inspection 150
Removal and Installation 151

DTC P0335 CKP SENSOR 152
Description 152
CONSULT-III Reference Value in Data Monitor Mode 152
On Board Diagnosis Logic 152
DTC Confirmation Procedure 152
Wiring Diagram 153
Diagnosis Procedure 154
Component Inspection 156
Removal and Installation 156

DTC P0336 CKP SENSOR 157
Description 157
CONSULT-III Reference Value in Data Monitor Mode 157
On Board Diagnosis Logic 157
DTC Confirmation Procedure 157
Wiring Diagram 158
Diagnosis Procedure 159
Component Inspection 161
Removal and Installation 162

DTC P0340 CMP SENSOR 163
Description 163
On Board Diagnosis Logic 163
DTC Confirmation Procedure 163
Wiring Diagram 164
Diagnosis Procedure 165
Component Inspection 166
Removal and Installation 167

DTC P0341 CMP SENSOR 168
Description 168
On Board Diagnosis Logic 168
DTC Confirmation Procedure 168
Wiring Diagram 169
Diagnosis Procedure 170
Component Inspection 172
Removal and Installation 172

DTC P0380 GLOW RELAY 173
On Board Diagnosis Logic 173
DTC Confirmation Procedure 173
Wiring Diagram 174
Diagnosis Procedure 174
Component Inspection 176

DTC P0403 EGR SYSTEM 177
Description 177
CONSULT-III Reference Value in Data Monitor Mode 178
On Board Diagnosis Logic 178
DTC Confirmation Procedure 178
Wiring Diagram 179
Diagnosis Procedure 180
Removal and Installation 183

DTC P0405, P0406 EGR SENSOR 184
Description 184
CONSULT-III Reference Value in Data Monitor Mode 185
On Board Diagnosis Logic 185
DTC Confirmation Procedure 185
Wiring Diagram 186
Diagnosis Procedure 187
Removal and Installation 189

DTC P0409 EGR SYSTEM 190
Description 190
CONSULT-III Reference Value in Data Monitor Mode 191
On Board Diagnosis Logic 191
DTC Confirmation Procedure 191
Wiring Diagram 192
Diagnosis Procedure 193
Removal and Installation 195

DTC P0488 EGR SYSTEM 196
Description 196
CONSULT-III Reference Value in Data Monitor Mode 197
On Board Diagnosis Logic 197
DTC Confirmation Procedure 197
Wiring Diagram 198
Diagnosis Procedure 199
Removal and Installation 200

DTC P0563 BATTERY VOLTAGE 201
On Board Diagnosis Logic 201
DTC Confirmation Procedure 201
Diagnosis Procedure 201

DTC P0606 ECM 203
Description 203
On Board Diagnosis Logic 203
DTC Confirmation Procedure 203
Diagnosis Procedure 203

DTC P0628, P0629 FUEL PUMP .....

Description 205
CONSULT-III Reference Value in Data Monitor Mode 205
On Board Diagnosis Logic 205
DTC Confirmation Procedure 205
Wiring Diagram 206
Diagnosis Procedure 207
Component Inspection 208
Removal and Installation 209

DTC P0642, P0643 SENSOR POWER SUPPLY 210
On Board Diagnosis Logic 210
DTC Confirmation Procedure 210
Wiring Diagram 211
Diagnosis Procedure 212

DTC P0652, P0653 SENSOR POWER SUPPLY 214
On Board Diagnosis Logic 214
DTC Confirmation Procedure 214
Wiring Diagram 215
Diagnosis Procedure 216

DTC P0668, P0669 ECM 218
Description 218
On Board Diagnosis Logic 218
DTC Confirmation Procedure 218
Diagnosis Procedure 218

DTC P0686 ECM RELAY 220
On Board Diagnosis Logic 220
DTC Confirmation Procedure 220
Wiring Diagram 221
Diagnosis Procedure 224
Component Inspection 226

DTC P1268 - P1271 FUEL INJECTOR 227
Component Description 227
CONSULT-III Reference Value in Data Monitor Mode 227
On Board Diagnosis Logic 227
DTC Confirmation Procedure 227
Wiring Diagram 229
Diagnosis Procedure 231
Component Inspection 232
Removal and Installation 233

DTC P1272 FUEL PUMP 234
Description 234
CONSULT-III Reference Value in Data Monitor Mode 234
On Board Diagnosis Logic 234
DTC Confirmation Procedure 234
Wiring Diagram 235
Diagnosis Procedure 236
Component Inspection 238
Removal and Installation 238

DTC P1273 FUEL PUMP 239
Description 239
CONSULT-III Reference Value in Data Monitor Mode 239
On Board Diagnosis Logic 239
DTC Confirmation Procedure 239
Wiring Diagram 240
Diagnosis Procedure 241
Component Inspection 243
Removal and Installation 243

DTC P1274 FUEL PUMP 244
Description 244
CONSULT-III Reference Value in Data Monitor Mode 244
On Board Diagnosis Logic 244
DTC Confirmation Procedure 244
Wiring Diagram 245
Diagnosis Procedure 246
Component Inspection 247
Removal and Installation 248

DTC P1275 FUEL PUMP 249
Description 249
CONSULT-III Reference Value in Data Monitor Mode 249
On Board Diagnosis Logic 249
DTC Confirmation Procedure 249
Wiring Diagram 250
Diagnosis Procedure 251
Component Inspection 252
Removal and Installation 253

DTC P1622 INJECTOR ADJUSTMENT VALUE 254
Description 254
On Board Diagnosis Logic 254
DTC Confirmation Procedure 254
Diagnosis Procedure 254

DTC P1623 INJECTOR ADJUSTMENT VALUE 255
Description 255
On Board Diagnosis Logic 255
DTC Confirmation Procedure 255
Diagnosis Procedure 255

DTC P2135 APP SENSOR 257
Description 257
CONSULT-III Reference Value in Data Monitor Mode 257
On Board Diagnosis Logic 257
DTC Confirmation Procedure 257
Wiring Diagram 258
Diagnosis Procedure 259
Component Inspection 261
Removal and Installation 261

DTC P2146, P2149 FUEL INJECTOR POWER SUPPLY 262
Component Description 262

CONSULT-III Reference Value in Data Monitor Mode 262
On Board Diagnosis Logic 262
DTC Confirmation Procedure 262
Wiring Diagram 263
Diagnosis Procedure 265

DTC P2147, P2148 FUEL INJECTOR CIRCUIT 266
Component Description 266
CONSULT-III Reference Value in Data Monitor Mode 266
On Board Diagnosis Logic 266
DTC Confirmation Procedure 266
Wiring Diagram 267
Diagnosis Procedure 269
Component Inspection 270
Removal and Installation 270

DTC P2228, P2229 BARO SENSOR 271
Description 271
On Board Diagnosis Logic 271
DTC Confirmation Procedure 271
Diagnosis Procedure 271

GLOW CONTROL SYSTEM 273
Description 273
Wiring Diagram 274
Diagnosis Procedure 274
Component Inspection 278
Removal and Installation 279

HEAT UP SWITCH 280
Description 280
CONSULT-III Reference Value in Data Monitor Mode 280
Wiring Diagram 281
Diagnosis Procedure 282
Component Inspection 284

BRAKE SWITCH 285
Description 285
CONSULT-III Reference Value in Data Monitor Mode 285
Wiring Diagram 286
Diagnosis Procedure 287
Component Inspection 288

PNP SWITCH 289
Description 289
CONSULT-III Reference Value in Data Monitor Mode 289
Wiring Diagram 290
Diagnosis Procedure 291

START SIGNAL 293
Wiring Diagram 293
Diagnosis Procedure 294

MI & DATA LINK CONNECTORS 296
Wiring Diagram 296

SERVICE DATA AND SPECIFICATIONS (SDS) 298
General Specification 298
Mass Air Flow Sensor 298
Intake Air Temperature Sensor 298
Engine Coolant Temperature Sensor 298
Fuel Rail Pressure Sensor 298
Fuel Injector 298
Crankshaft Position Sensor 298
Camshaft Position Sensor 299
Glow Plug 299
Fuel Pump 299

SERVICE INFORMATION

MODIFICATION NOTICE

Major Modification Item

INFOID:0000000003844114

- YD25DDTi (with common rail) engine has newly been added.

INDEX FOR DTC

U1000

INFOID:0000000003759277

DTC*1		Items (CONSULT-III screen item)	Reference page
CONSULT-III GST*2	ECM*3		
U1000	1000*4	CAN COMM CIRCUIT	EC-83

*1: 1st trip DTC No. and 2nd trip DTC No. are the same as DTC No.
*2: This number is prescribed by ISO 15031-6.
*3: In Diagnostic Test Mode II (Self-diagnostic results).
*4: The troubleshooting for this DTC needs CONSULT-III.

P0016 - P0123

INFOID:0000000003759278

DTC*1		Items (CONSULT-III screen item)	Reference page
CONSULT-III GST*2	ECM*3		
P0016	0016	CMP/CKP RELATION	EC-85
P0088	0088	HIGH FUEL PRESS	EC-87
P0089	0089	FUEL PUMP	EC-89
P0093	0093	FUEL LEAK	EC-91
P0101	0101	MAF SENSOR	EC-94
P0102	0102	MAF SEN/CIRCUIT	EC-103
P0103	0103	MAF SEN/CIRCUIT	EC-103
P0112	0112	IAT SEN/CIRCUIT	EC-111
P0113	0113	IAT SEN/CIRCUIT	EC-111
P0117	0117	ECT SEN/CIRCUIT	EC-115
P0118	0118	ECT SEN/CIRCUIT	EC-115
P0122	0122	APP SEN 1/CIRCUIT	EC-119
P0123	0123	APP SEN 1/CIRCUIT	EC-119

*1: 1st trip DTC No. and 2nd trip DTC No. are the same as DTC No.
*2: This number is prescribed by ISO 15031-6.
*3: In Diagnostic Test Mode II (Self-diagnostic results).

P0182 - P0217

INFOID:0000000003759280

DTC*1		Items (CONSULT-III screen item)	Reference page
CONSULT-III GST*2	ECM*3		
P0182	0182	FUEL TEMP SEN/CIRC	EC-124
P0183	0183	FUEL TEMP SEN/CIRC	EC-124
P0192	0192	FRP SEN/CIRC	EC-128
P0193	0193	FRP SEN/CIRC	EC-128
P0200	0200	INJECTOR	EC-132
P0201	0201	CYL1 INJECTOR	EC-133
P0202	0202	CYL2 INJECTOR	EC-133

DTC*1		Items (CONSULT-III screen item)	Reference page
CONSULT-III GST*2	ECM*3		
P0203	0203	CYL3 INJECTOR	EC-133
P0204	0204	CYL4 INJECTOR	EC-133
P0217	0217	ENG OVER TEMP	EC-138

*1: 1st trip DTC No. and 2nd trip DTC No. are the same as DTC No.
*2: This number is prescribed by ISO 15031-6.
*3: In Diagnostic Test Mode II (Self-diagnostic results).

P0222 - P0488

INFOID:0000000003759281

DTC*1		Items (CONSULT-III screen item)	Reference page
CONSULT-III GST*2	ECM*3		
P0222	0222	APP SEN 2/CIRCUIT	EC-147
P0223	0223	APP SEN 2/CIRCUIT	EC-147
P0335	0335	CKP SEN/CIRCUIT	EC-152
P0336	0336	CKP SENSOR	EC-157
P0340	0340	CMP SEN/CIRCUIT	EC-163
P0341	0341	CMP SENSOR	EC-168
P0380	0380	GLOW RELAY	EC-173
P0403	0403	EGR SYSTEM	EC-177
P0405	0405	EGR SENSOR	EC-184
P0406	0406	EGR SENSOR	EC-184
P0409	0409	EGR SYSTEM	EC-190
P0488	0488	EGR SYSTEM	EC-196

*1: 1st trip DTC No. and 2nd trip DTC No. are the same as DTC No.
*2: This number is prescribed by ISO 15031-6.
*3: In Diagnostic Test Mode II (Self-diagnostic results).

P0563 - P0686

INFOID:0000000003759284

DTC*1		Items (CONSULT-III screen item)	Reference page
CONSULT-III GST*2	ECM*3		
P0563	0563	BATTERY VOLTAGE	EC-201
P0606	0606	ECM	EC-203
P0628	0628	FUEL PUMP/CIRC	EC-205
P0629	0629	FUEL PUMP/CIRC	EC-205
P0642	0642	SENSOR PWR/CIRC1	EC-210
P0643	0643	SENSOR PWR/CIRC1	EC-210
P0652	0652	SENSOR PWR/CIRC2	EC-214
P0653	0653	SENSOR PWR/CIRC2	EC-214
P0668	0668	ECM	EC-218
P0669	0669	ECM	EC-218
P0686	0686	ECM RELAY	EC-220

*1: 1st trip DTC No. and 2nd trip DTC No. are the same as DTC No.
*2: This number is prescribed by ISO 15031-6.
*3: In Diagnostic Test Mode II (Self-diagnostic results).

P1268 - P1275

INFOID:0000000003759286

DTC*1		Items (CONSULT-III screen item)	Reference page
CONSULT-III GST*2	ECM*3		
P1268	1268	INJECTOR 1	EC-227
P1269	1269	INJECTOR 2	EC-227
P1270	1270	INJECTOR 3	EC-227
P1271	1271	INJECTOR 4	EC-227
P1272	1272	FRP RELIEF VALVE	EC-234
P1273	1273	FUEL PUMP	EC-239
P1274	1274	FUEL PUMP	EC-244
P1275	1275	FUEL PUMP	EC-249

*1: 1st trip DTC No. and 2nd trip DTC No. are the same as DTC No.
*2: This number is prescribed by ISO 15031-6.
*3: In Diagnostic Test Mode II (Self-diagnostic results).

P1610 - P1616

INFOID:0000000003759287

DTC*1		Items (CONSULT-III screen item)	Reference page
CONSULT-III GST*2	ECM*3		
P1610	1610	LOCK MODE	EL-102
P1611	1611	ID DISCORD, IMM-ECM	EL-103
P1612	1612	CHAIN OF ECM-IMMU	EL-103
P1614	1614	CHAIN OF IMMU-KEY	EL-105
P1615	1615	DIFFERENCE OF KEY	EL-106
P1616	1616	ECM	EL-106

*1: 1st trip DTC No. and 2nd trip DTC No. are the same as DTC No.
*2: This number is prescribed by ISO 15031-6.
*3: In Diagnostic Test Mode II (Self-diagnostic results).

P1622 - P2229

INFOID:0000000003759290

DTC*1		Items (CONSULT-III screen item)	Reference page
CONSULT-III GST*2	ECM*3		
P1622	1622	INJ ADJ VAL UNRGST	EC-254
P1623	1623	INJ ADJ VAL ERROR	EC-255
P2135	2135	APP SENSOR	EC-257
P2146	2146	INJ PWR/CIRC	EC-262
P2147	2147	INJECTOR/CIRC	EC-266
P2148	2148	INJECTOR/CIRC	EC-266
P2149	2149	INJ PWR/CIRC	EC-262

DTC*1		Items (CONSULT-III screen item)	Reference page
CONSULT-III GST*2	ECM*3		
P2228	2228	BARO SEN/CIRC	EC-271
P2229	2229	BARO SEN/CIRC	EC-271

*1: 1st trip DTC No. and 2nd trip DTC No. are the same as DTC No.

*2: This number is prescribed by ISO 15031-6.

*3: In Diagnostic Test Mode II (Self-diagnostic results).

PRECAUTIONS

Precaution for Supplemental Restraint System (SRS) "AIR BAG" and "SEAT BELT PRE-TENSIONER"

INFOID:0000000003761794

The Supplemental Restraint System such as “AIR BAG” and “SEAT BELT PRE-TENSIONER”, used along with a front seat belt, helps to reduce the risk or severity of injury to the driver and front passenger for certain types of collision. Information necessary to service the system safely is included in the “SUPPLEMENTAL RESTRAINT SYSTEM” and “SEAT BELTS” of this Service Manual.

WARNING:

- **To avoid rendering the SRS inoperative, which could increase the risk of personal injury or death in the event of a collision which would result in air bag inflation, all maintenance must be performed by an authorized NISSAN/INFINITI dealer.**
- **Improper maintenance, including incorrect removal and installation of the SRS, can lead to personal injury caused by unintentional activation of the system. For removal of Spiral Cable and Air Bag Module, see the “SUPPLEMENTAL RESTRAINT SYSTEM”.**
- **Do not use electrical test equipment on any circuit related to the SRS unless instructed to in this Service Manual. SRS wiring harnesses can be identified by yellow and/or orange harnesses or harness connectors.**

Precaution for Procedure without Cowl Top Cover

INFOID:0000000003759292

When performing the procedure after removing cowl top cover, cover the lower end of windshield with urethane, etc.

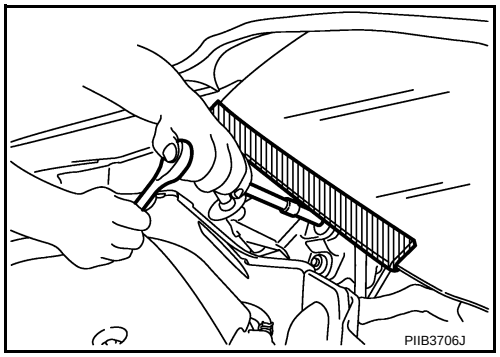

On Board Diagnosis (OBD) System of Engine

INFOID:0000000003759293

The ECM has an on board diagnostic system. It will light up the malfunction indicator (MI) to warn the driver of a malfunction causing emission deterioration.

CAUTION:

- **Be sure to turn the ignition switch OFF and disconnect the battery negative cable before any repair or inspection work. The open/short circuit of related switches, sensors, solenoid valves, etc. will cause the MI to light up.**
- **Be sure to connect and lock the connectors securely after work. A loose (unlocked) connector will cause the MI to light up due to the open circuit. (Be sure the connector is free from water, grease, dirt, bent terminals, etc.)**
- **Certain systems and components, especially those related to OBD, may use a new style slide-locking type harness connector. For description and how to disconnect, refer to “HARNESS CONNECTOR” in EL section.**
- **Be sure to route and secure the harnesses properly after work. The interference of the harness with a bracket, etc. may cause the MI to light up due to the short circuit.**
- **Be sure to connect rubber tubes properly after work. A misconnected or disconnected rubber tube may cause the MI to light up due to the malfunction of the fuel system, etc.**
- **Be sure to erase the unnecessary malfunction information (repairs completed) from the ECM before returning the vehicle to the customer.**

Precaution

INFOID:0000000003759294

- **Always use a 12 volt battery as power source.**
- **Do not attempt to disconnect battery cables while engine is running.**
- **Before connecting or disconnecting the ECM harness connector, turn ignition switch OFF and disconnect battery negative cable. Failure to do so may damage the ECM because battery voltage is applied to ECM even if ignition switch is turned OFF.**
- **Before removing parts, turn ignition switch OFF and then disconnect battery negative cable.**

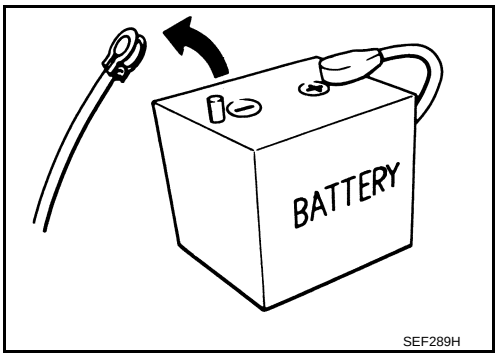

SEF289H

- **Do not disassemble ECM.**

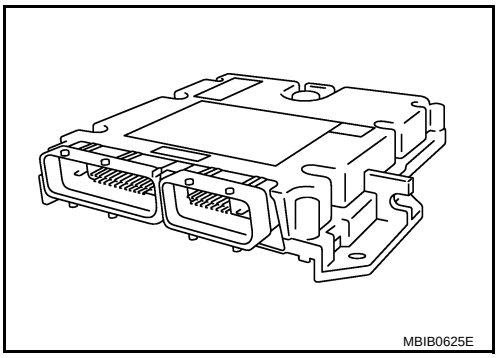
MBIB0625E

- **When connecting ECM harness connector, fasten it securely with levers as far as they will go as shown in the figure.**

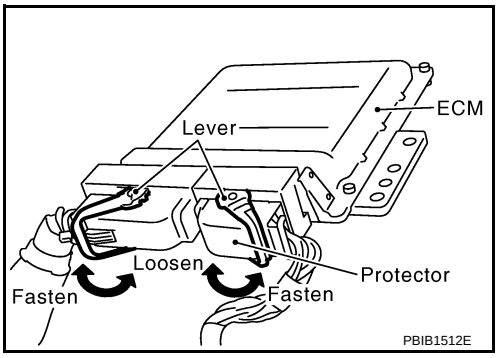

PBIB1512E

- **When connecting or disconnecting pin connectors into or from ECM, take care not to damage pin terminals (bend or break).**
  Make sure that there are not any bends or breaks on ECM pin terminal, when connecting pin connectors.
- **Securely connect ECM harness connectors.**
  A poor connection can cause an extremely high (surge) voltage to develop in coil and condenser, thus resulting in damage to IC's.
- **Keep engine control system harness at least 10cm (4 in) away from adjacent harness, to prevent engine control system malfunctions due to receiving external noise, degraded operation of IC's, etc.**
- **Keep engine control system parts and harness dry.**

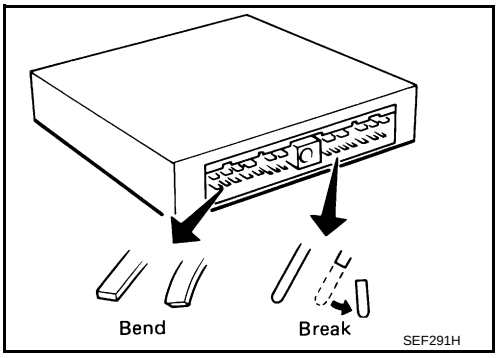

SEF291H

- **Before replacing ECM, perform ECM Terminals and Reference Value inspection and make sure ECM functions properly. Refer to EC-57, "ECM Terminal and Reference Value".**
- **Handle mass air flow sensor carefully to avoid damage.**
- **Do not disassemble mass air flow sensor.**
- **Do not clean mass air flow sensor with any type of detergent.**
- **Even a slight leak in the air intake system can cause serious incidents.**
- **Do not shock or jar the camshaft position sensor, crankshaft position sensor.**

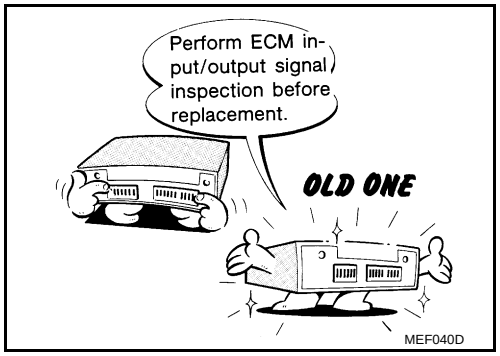

- **After performing each TROUBLE DIAGNOSIS, perform DTC Confirmation Procedure or Overall Function Check.**
  The DTC should not be displayed in the DTC Confirmation Procedure if the repair is completed. The Overall Function Check should be a good result if the repair is completed.

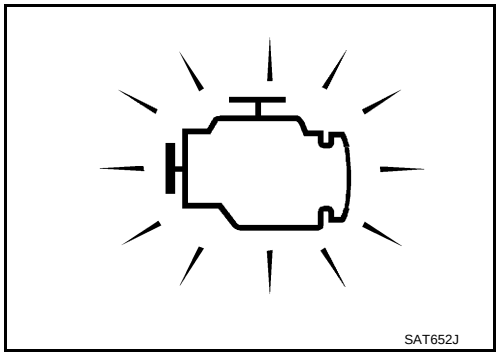

- **When measuring ECM signals with a circuit tester, never allow the two tester probes to contact.**
  Accidental contact of probes will cause a short circuit and damage the ECM power transistor.
- **Do not use ECM ground terminals when measuring input/output voltage. Doing so may result in damage to the ECM's transistor. Use a ground other than ECM terminals, such as the ground.**
- **Do not disassemble fuel pump.**
  If NG, take proper action.
- **Do not disassemble fuel injector.**
  If NG, replace fuel injector.

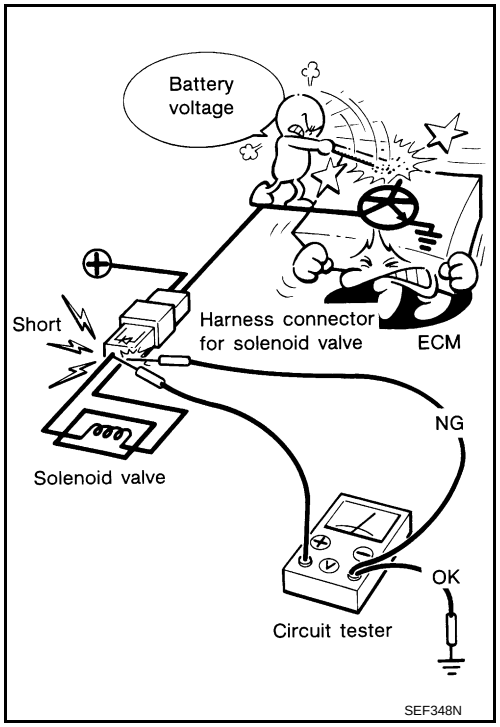

- **Do not depress accelerator pedal when starting.**
- **Immediately after starting, do not rev up engine unnecessarily.**
- **Do not rev up engine just prior to shutdown.**

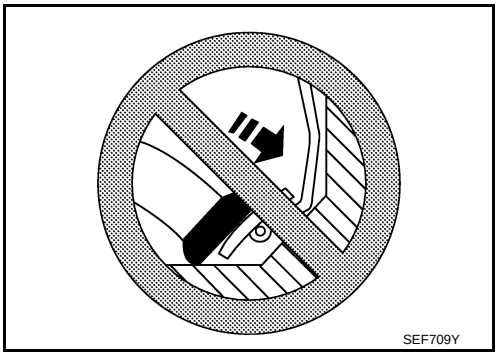

- **When installing C.B. ham radio or a mobile phone, be sure to observe the following as it may adversely affect electronic control systems depending on installation location.**
- **Keep the antenna as far as possible from the electronic control units.**
- **Keep the antenna feeder line more than 20 cm (8 in) away from the harness of electronic controls.**
  Do not let them run parallel for a long distance.
- **Adjust the antenna and feeder line so that the standing-wave radio can be kept smaller.**
- **Be sure to ground the radio to vehicle body.**

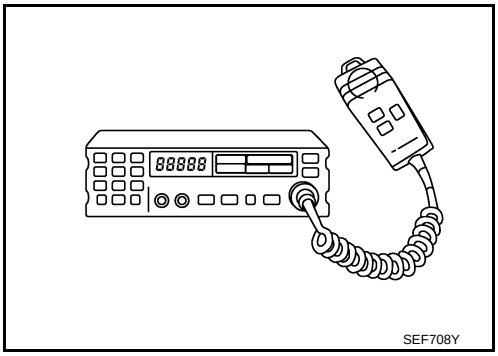

PREPARATION

Special Service Tool

INFOID:0000000003759295

Tool number Tool name		Description
EG17650301 Radiator cap tester adapter	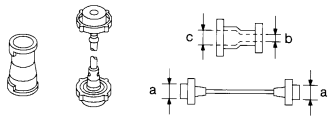 S-NT564	Adapting radiator cap tester to radiator cap and radiator filler neck **a: 28 (1.10) dia.** **b: 31.4 (1.236) dia.** **c: 41.3 (1.626) dia.** Unit: mm (in)
KV11106030 Positioning stopper pin	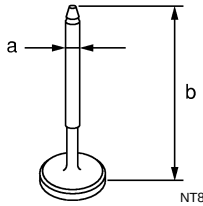 NT804	Fixing fuel pump sprocket **a: 6 mm (0.24 in) dia.** **b: 80 mm (3.15 in) dia.**
KV11106040 TORX wrench	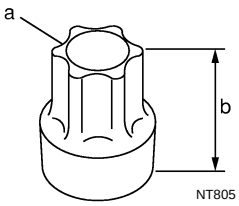 NT805	Removing and installing fuel pump sprocket **a: T70** **b: 26 mm (1.02 in)**
KV11106050 Hexagonal wrench	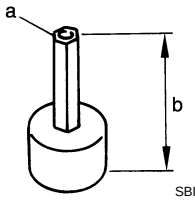 SBIA0224E	Removing and installing fuel pump sprocket **a: 6 mm (0.24 in) (Face to face)** **b: 42 mm (1.65 in)**
KV11106060 Sprocket holder	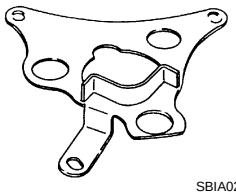 SBIA0225E	Holding fuel pump sprocket

Commercial Service Tool

INFOID:0000000003759296

Tool name	Description
Socket wrench 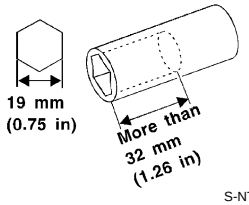 S-NT705	Removing and installing engine coolant temperature sensor

ENGINE CONTROL SYSTEM

Schematic

INFOID:0000000003759297

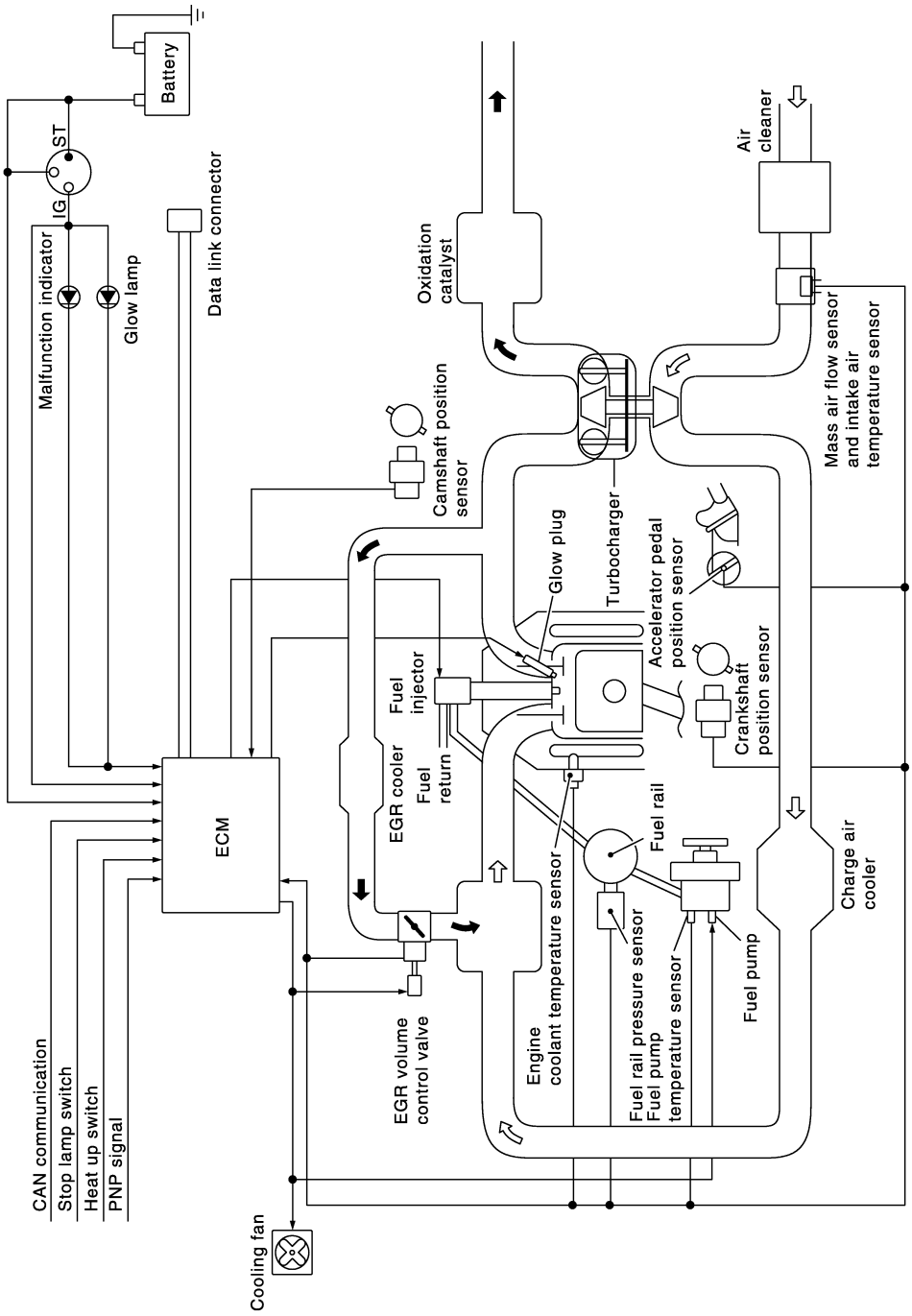

JMBIA1298GB

System Chart

INFOID:0000000003759299

Input (Sensor)	ECM Function	Output (Actuator)
• Accelerator pedal position sensor • Fuel rail pressure sensor • Fuel pump temperature sensor • Engine coolant temperature sensor • Mass air flow sensor • Intake air temperature sensor • Crankshaft position sensor • Camshaft position sensor • Vehicle speed sensor*1 • ABS actuator and electric unit (control unit)*1 • Ignition switch • Stop lamp switch • Air conditioner switch*1 • Park/neutral position switch • Battery voltage • EGR volume control valve control position sensor	Fuel injection control	• Fuel injector • Fuel pump
	Fuel injection timing control	• Fuel injector • Fuel pump
	Fuel cut control	• Fuel injector • Fuel pump
	Glow control system	• Glow relay • Glow indicator lamp*2
	On board diagnostic system	Malfunction indicator (MI)*2
	EGR volume control	EGR volume control valve
	Cooling fan control	Cooling fan relay

*1: The input signal is sent to the ECM through CAN communication line.

*2: The output signal is sent from the ECM through CAN communication line.

Fuel Injection Control System

INFOID:0000000003759300

SYSTEM DESCRIPTION

Three types of fuel injection control are provided to accommodate engine operating conditions; normal control, idle control and start control. The ECM determines the appropriate fuel injection control. Under each control, the amount of fuel injected is adjusted to improve engine performance.
Pulse signals are sent to fuel injectors according to the input signals to adjust the amount of fuel injected to preset value.

START CONTROL

Input/Output Signal Chart

Sensor	Input Signal to ECM	ECM Function	Actuator
Engine coolant temperature sensor	Engine coolant temperature	Fuel injection control (start control)	Fuel injector Fuel pump
Crankshaft position sensor	Engine speed		
Camshaft position sensor	Piston position		
Ignition switch	Start signal		
Fuel rail pressure sensor	Fuel rail pressure		

When the ECM receives a start signal from the ignition switch, the ECM adapts the fuel injection system for the start control. The amount of fuel injected at engine starting is a preset program value in the ECM. The program is determined by the engine speed, engine coolant temperature and fuel rail pressure.
For better start ability under cool engine conditions, the lower the coolant temperature becomes, the greater the amount of fuel injected. The ECM ends the start control when the engine speed reaches the specific value, and shifts the control to the normal or idle control.

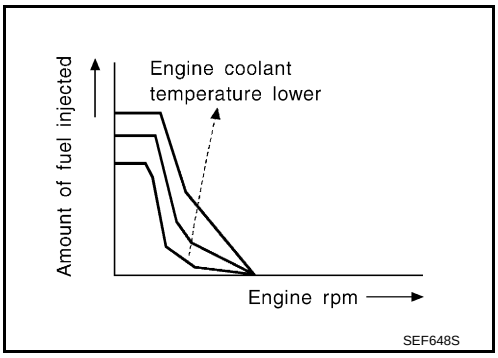

IDLE CONTROL

Input/Output Signal Chart

Sensor	Input Signal to ECM	ECM Function	Actuator
Engine coolant temperature sensor	Engine coolant temperature	Fuel injection control (Idle control)	Fuel injector Fuel pump
Crankshaft position sensor	Engine speed		
Battery	Battery voltage		
Accelerator pedal position sensor	Accelerator pedal position		
Fuel rail pressure sensor	Fuel rail pressure		
Vehicle speed sensor	Vehicle speed*		
Air conditioner switch	Air conditioner signal*		

*: The input signal is sent to the ECM through CAN communication line.

When the ECM determines that the engine speed is at idle, the fuel injection system is adapted for the idle control. The ECM regulates the amount of fuel injected corresponding to changes in load applied to the engine to keep engine speed constant. The ECM also provides the system with a fast idle control in response to the engine coolant temperature signal.

NORMAL CONTROL

Input/Output Signal Chart

Sensor	Input Signal to ECM	ECM Function	Actuator
Crankshaft position sensor	Engine speed	Fuel injection control (Normal control)	Fuel injector Fuel pump
Accelerator pedal position sensor	Accelerator position		
Fuel rail pressure sensor	Fuel rail pressure		

The amount of fuel injected under normal driving conditions is determined according to sensor signals. The crankshaft position sensor detects engine speed, the accelerator pedal position sensor detects accelerator pedal position and fuel rail pressure sensor detects fuel rail pressure. These sensors send signals to the ECM.
The fuel injection data, predetermined by correlation between various engine speeds, accelerator pedal positions and fuel rail pressure are stored in the ECM memory, forming a map. The ECM determines the optimal amount of fuel to be injected using the sensor signals in comparison with the map.

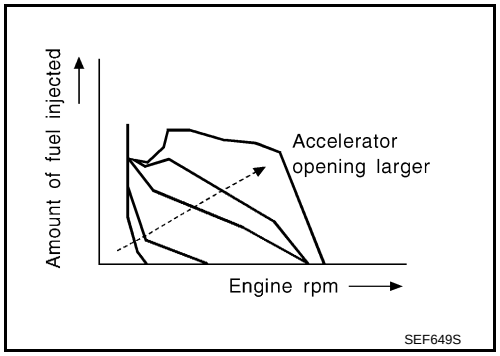

MAXIMUM AMOUNT CONTROL

Input/Output Signal Chart

Sensor	Input Signal to ECM	ECM Function	Actuator
Mass air flow sensor	Amount of intake air	Fuel injection control (Maximum amount control)	Fuel Injector
Engine coolant temperature sensor	Engine coolant temperature		
Crankshaft position sensor	Engine speed		
Accelerator pedal position sensor	Accelerator pedal position		

The maximum injection amount is controlled to an optimum by the engine speed, intake air amount, engine coolant temperature, and accelerator opening in accordance with the driving conditions.
This prevents the oversupply of the injection amount caused by decreased air density at a high altitude or during a system failure.

DECELERATION CONTROL

Input/Output Signal Chart

Sensor	Input Signal to ECM	ECM Function	Actuator
Accelerator pedal position sensor	Accelerator pedal position	Fuel injection control (Deceleration control)	Fuel injector Fuel pump
Crankshaft position sensor	Engine speed		

The ECM sends a fuel cut signal to the fuel injectors and fuel pump during deceleration for better fuel efficiency. The ECM determines the time of deceleration according to signals from the accelerator pedal position sensor and crankshaft position sensor.

Fuel Injection Timing Control System

INFOID:0000000003759301

DESCRIPTION

The target fuel injection timing in accordance with the engine speed and the fuel injection amount are recorded as a map in the ECM beforehand. The ECM determines the optimum injection timing using sensor signals accordance with the map.

Air Conditioning Cut Control

INFOID:0000000003759302

INPUT / OUTPUT SIGNAL CHART

Sensor	Input Signal to ECM	ECM Function	Actuator
Air conditioner switch	Air conditioner ON signal*	Air conditioner cut control	Air conditioner relay
Accelerator pedal position sensor	Accelerator pedal opening angle		
Vehicle speed sensor	Vehicle speed*		
Engine coolant temperature sensor	Engine coolant temperature		

*: The input signal is sent to the ECM through CAN communication line.

SYSTEM DESCRIPTION

This system improves acceleration when the air conditioner is used.
When the accelerator pedal is fully depressed, the air conditioner is turned off for a few seconds.
When engine coolant temperature becomes excessively high, the air conditioner is turned off. This continues until the engine coolant temperature returns to normal.

Fuel Cut Control (At No Load & High Engine Speed)

INFOID:0000000003759303

INPUT/OUTPUT SIGNAL CHART

Sensor	Input Signal to ECM	ECM Function	Actuator
Vehicle speed sensor	Vehicle speed*	Fuel cut control	Fuel injector
Accelerator pedal position sensor	Accelerator pedal position		
Crankshaft position sensor	Engine speed		

*: The input signal is sent to the ECM through CAN communication line.

If the engine speed is above 2,800 rpm under no load (for example, the shift position is neutral and engine speed is over 2,800 rpm) fuel will be cut off after some time. The exact time when the fuel is cut off varies based on engine speed. Fuel cut will be operated until the engine speed reaches 1,500 rpm, then fuel cut will be cancelled.

NOTE:

This function is different from deceleration control listed under EC-18, "Fuel Injection Control System".

Crankcase Ventilation System

INFOID:0000000003759304

DESCRIPTION

In this system, blow-by gas is sucked into the air duct after oil separation by oil separator in the rocker cover.

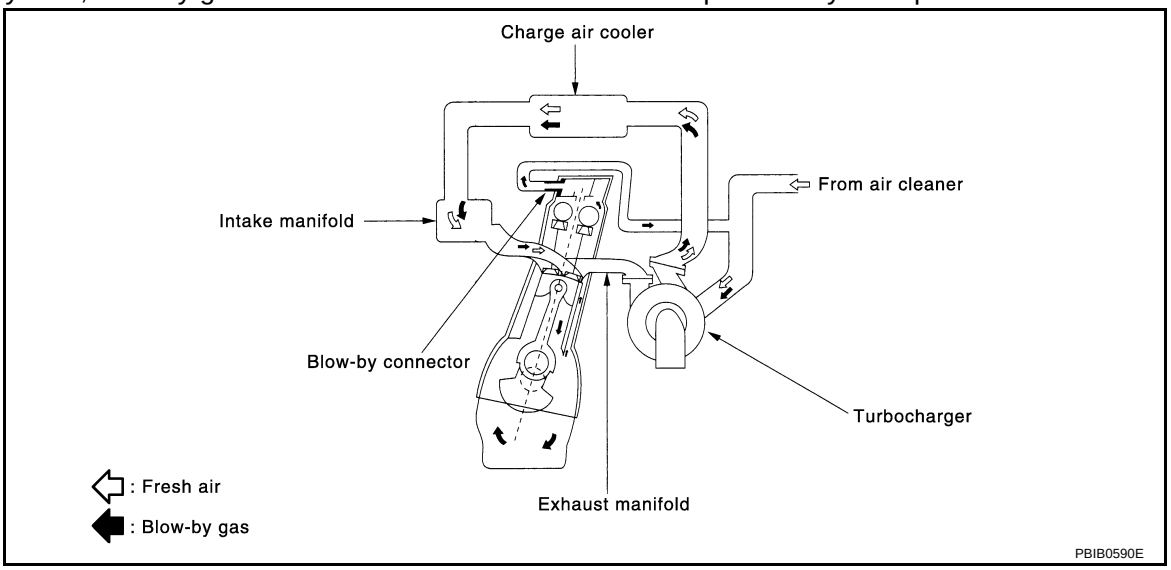

INSPECTION

Ventilation Hose

1. Check hoses and hose connections for leaks.
2. Disconnect all hoses and clean with compressed air. If any hose cannot be freed of obstructions, replace.

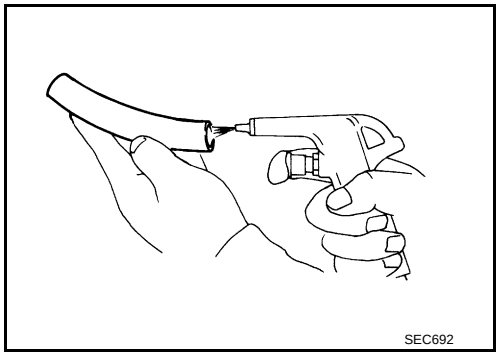

CAN Communication

INFOID:0000000003759305

SYSTEM DESCRIPTION

CAN (Controller Area Network) is a serial communication line for real time application. It is an on-vehicle multiplex communication line with high data communication speed and excellent error detection ability. Many electronic control units are equipped onto a vehicle, and each control unit shares information and links with other control units during operation (not independent). In CAN communication, control units are connected with 2 communication lines (CAN H line, CAN L line) allowing a high rate of information transmission with less wiring. Each control unit transmits/receives data but selectively reads required data only.
Refer to EL-110, "CAN System Specification Chart", about CAN communication for detail.

BASIC SERVICE PROCEDURE

Fuel Filter

INFOID:0000000003843895

DESCRIPTION

A water draining cock is on the lower side and a priming pump for bleeding air is on the upper side.

AIR BLEEDING

Pump the priming pump (1) to bleed air.

- When air is bled completely, the pumping of the priming pump suddenly becomes heavy. Stop the operation at that time.
- If it is difficult to bleed air by the pumping of the priming pump (the pumping of the priming pump does not become heavy), disconnect the fuel supply hose between the fuel filter and the fuel gallery. Then, perform the operation described above, and make sure that fuel comes out. (Use a pan, etc. so as not to spill fuel. Do not let fuel get on engine and other parts.) After that, connect the hose, then bleed air again.
- Start engine and let it idle for at least 1 minute after performing air bleeding.

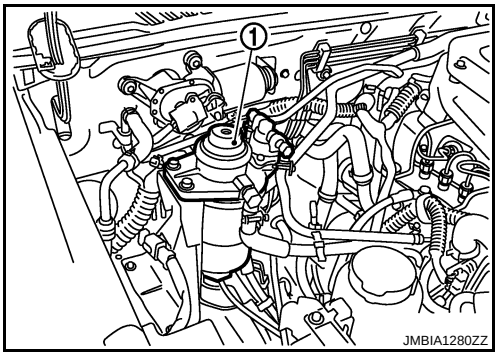

WATER DRAINING

1. Remove the fuel filter, filter bracket, protector assembly from the dash panel as follows.

a. Remove the air cleaner case (upper), air duct assembly, and vacuum hose for brake booster (between the vacuum pump and vacuum pipe).
   CAUTION:
   After the duct is removed, cover the opening with gum tape, etc. to prevent foreign object from getting into the engine during the operation.

b. Remove the mounting nuts on the dash panel, then remove the fuel filter, filter bracket, and protector assembly from the dash panel.
   - It is not necessary to disconnect the fuel hose.

2. Using a tool such as a pliers, loosen the water draining cock at the bottom of the fuel filter.
   Loosening drain cock four to five turns causes water to start draining.
   Do not remove drain cock by loosening it excessively.
   If water dose not drain properly, move the priming up and down.
   CAUTION:
   When the water is drained, the fuel is also drained. Use a pan, etc. to avoid fuel adherence to the rubber parts such as the engine mount insulator.
   Do not over-tighten the water draining cock. This will damage the cock thread, resulting in water or fuel leak.

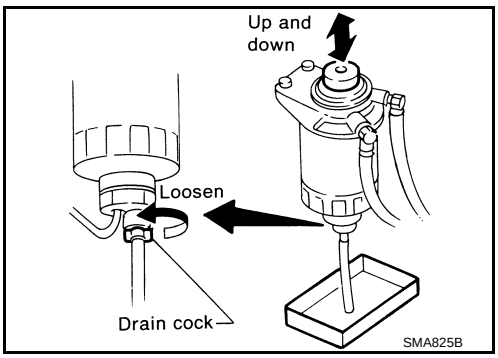

3. Bleed air of the fuel filter. Refer to “AIR BLEEDING”.
4. Start the engine.

Procedure After Replacing ECM

INFOID:0000000003759307

When replacing ECM, the following procedure must be performed.

1. Perform initialization of NATS system and registration of all NATS ignition key IDs. Refer to EL-96, "ECM Re-communicating Function".
2. Perform EC-22, "Injector Adjustment Value Registration".
3. Perform EC-23, "Fuel Pump Learning Value Clearing".
4. Perform EC-24, "EGR Volume Control Valve Closed Position Learning Value Clear".
5. Perform EC-24, "EGR Volume Control Valve Closed Position Learning".

Injector Adjustment Value Registration

INFOID:0000000003759308

DESCRIPTION

Injector adjustment value indicates manufacturing tolerance and the value is printed on the top of fuel injector. The injector adjustment value which is correctly stored in ECM is needed for precise fuel injection control.
A performance of emission control and a drivability may effect when there is a mismatch between the following two values.
- The injector adjustment value stored in ECM
- The injector adjustment value of the injector which is installed on the vehicle

Injector Adjustment Value Registration must be performed after the following cases.
- Injector(s) are replaced.
- ECM is replaced.

For the first case, Injector Adjustment Value Registration for the replaced fuel injector must be performed. And for the second case, Injector Adjustment Value Registration for all the fuel injectors must be performed.

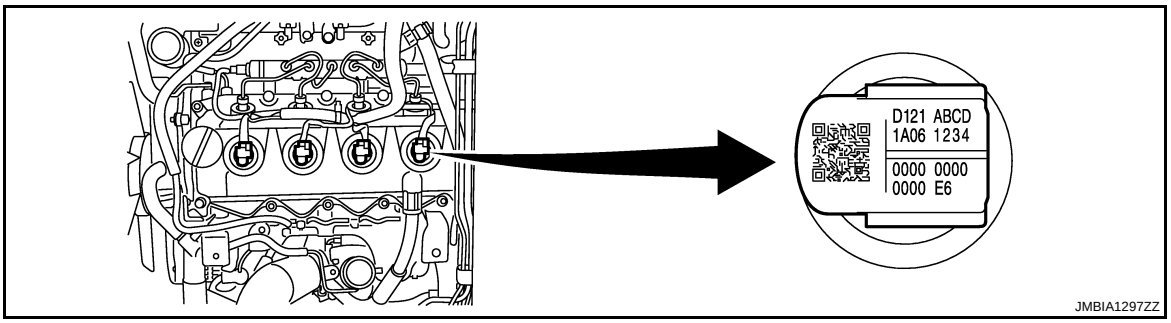

Example: Injector adjustment value = D121ABCD1A061234000000000000E6

OPERATION PROCEDURE

NOTE:
- **Before performing this procedure, record injector adjustment value printed on a fuel injector.**
- **When all fuel injectors are replaced or ECM is replaced, it is recommended to perform “INJ ADJ VAL CLR” in “WORK SUPPORT” mode before performing this procedure. By performing “INJ ADJ VAL CLR” in “WORK SUPPORT” mode, injector adjustment value stored in ECM is initialized.**

1. Turn ignition switch ON (engine stopped).
2. Select “ENTER INJECTOR CALIB DATA” in “WORK SUPPORT” mode with CONSULT-III.
3. Touch “START”.
   NOTE:
   When touching “START”, CONSULT-III reads injector adjustment values stored in ECM.
4. Select the number of the cylinder which needs Injector Adjustment Value Registration.
5. Input injector adjustment value, and touch “ENTER”.
   NOTE:
   Input injector adjustment value is stored in CONSULT-III.
6. Repeat step 4 - 5 till there is no cylinder which needs Injector Adjustment Value Registration, and touch “START”.
   NOTE:
   When touching “START”, injector adjustment values stored in CONSULT-III are written onto ECM memory.
7. After “CMND FINISHED” is displayed, make sure that the following values are same for each cylinder.
   - Injector adjustment value which is printed on a fuel injector.
   - Injector adjustment value which is displayed on CONSULT-III screen.

   NOTE:
   - In this step, CONSULT-III reads injector adjustment values stored in ECM and displays the values on the CONSULT-III screen. This is for checking if injector adjustment values are written onto ECM memory correctly.
   - If DTC is detected, perform DTC Confirmation Procedure for the DTC, and check if the same DTC is detected again.

Fuel Pump Learning Value Clearing

INFOID:0000000003759309

DESCRIPTION

In order to always keep optimum fuel pressure in fuel rail, the ECM controls fuel pump in high precision with monitoring the signal of fuel rail pressure sensor.
Accordingly, the ECM always learns characteristic value of fuel pump. Fuel Pump Learning Value Clearing is an operation to clear the value of the fuel pump learning.
Fuel Pump Learning Value Clearing should be performed under the following conditions.
- Fuel pump is changed.
- ECM is replaced with used one which stores the fuel pump learning value of other fuel pump.

OPERATION PROCEDURE

NOTE:
When removing fuel pump, perform Fuel Pump Learning Value Clearing before starting engine.

With CONSULT-III

1. Turn ignition switch ON.
2. Select “PUMP LEARNT CLEAR” in “ACTIVE TEST” mode with CONSULT-III.
3. Touch “CLEAR” and wait a few seconds.
4. Make sure that “CMPLT” is displayed on CONSULT-III screen.

Without CONSULT-III

Fuel pump learning value can be erased from the back up memory in the ECM by the same operation as erasing DTC. In detail, refer to EC-32, "Emission-Related Diagnostic Information".

EGR Volume Control Valve Closed Position Learning Value Clear

INFOID:0000000003759310

EGR volume control valve closed position learning value should be cleared under the following cases.
- EGR volume control valve is removed.
- EGR volume control valve is replaced.

OPERATION PROCEDURE

NOTE:
Always perform the following procedure with engine coolant temperature 0 to 30°C (32 to 86°F).

1. Turn ignition switch ON.
2. Select “EGR/V LEARN CLR” in “WORK SUPPORT” mode with CONSULT-III.
3. Touch “CLEAR” and wait a few seconds.
4. Make sure the “CMPLT” is displayed on CONSULT-III screen.

EGR Volume Control Valve Closed Position Learning

INFOID:0000000003759311

EGR Volume Control Valve Closed Position Learning is an operation to learn the fully closed position of the EGR volume control valve by monitoring the EGR volume control valve control position sensor output signal. It must be performed under any of the following conditions:
- EGR volume control valve is replaced.
- ECM is replaced.

OPERATION PROCEDURE

1. Turn ignition switch ON and wait at least 10 seconds.
2. Turn ignition switch OFF and wait at least 10 seconds.
   Make sure that EGR volume control valve moves during above 10 seconds by confirming the operating sound.

FUEL PUMP

INFOID:0000000003844070

Components

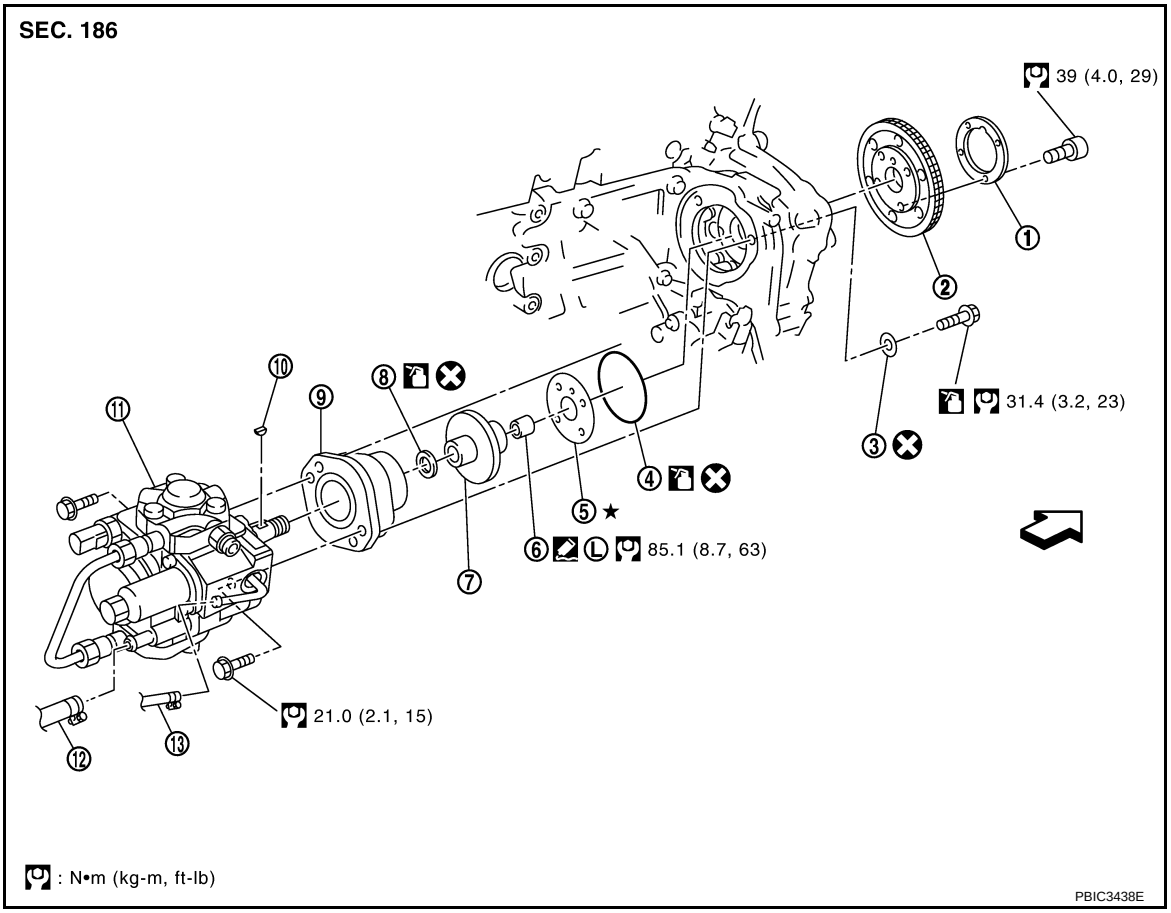

1.	Washer	2.	Fuel pump sprocket	3.	Seal washer
4.	O-ring	5.	Adjusting shim	6.	Sprocket nut
7.	Coupling	8.	Oil seal	9.	Spacer
10.	Key	11.	Fuel pump	12.	Fuel hose
13.	Spill hose				
⇦	: Engine front				

- Refer to “HOW TO USE THIS MANUAL” in GI section for symbol marks in the figure.

Removal and Installation

CAUTION:

- **Before removing and installing fuel pump, be sure to remove sprocket. Never loosen or remove installation nut in the center of fuel pump. If loosened or removed, replace fuel pump.**
- **After removing timing chain, never turn crankshaft and camshaft separately, or valves will strike piston heads.**
- **When installing camshafts, chain tensioners, oil seals, or other sliding parts, lubricate contacting surfaces with new engine oil.**
- **When fuel pump is replaced with new one or another one, perform fuel pump leaning value cleaning before starting engine. Refer to EC-23, "Fuel Pump Learning Value Clearing".**

REMOVAL

1. Remove engine cover, vacuum gallery and heater feed pipe. Refer to EM-6.
2. Remove fuel hose and spill hose from fuel pump. Refer to EM-8.
   CAUTION:
   Be careful not to spill fuel in the engine component.
3. Disconnect harness connectors from fuel pump.
4. Remove injection tube center, clip and insert rubber. Refer to EM-8.
   CAUTION:
   Be careful not to spill fuel in the engine component.

5. Remove secondary timing chain. Refer to “TIMING CHAIN” in EM section.
6. Hold fuel pump sprocket and remove bolt.

a. Insert the positioning stopper pin [SST (KV11106030)] into the hole 6 mm (0.24 in) in the diameter on the fuel pump sprocket.
b. Using the TORX wrench [SST (KV11106040)], turn pump shaft little by little to adjust the position of fuel pump sprocket so that the holes align.
c. Push the positioning stopper pin [SST (KV11106030)] through fuel pump sprocket to fuel pump body to hold fuel pump sprocket.

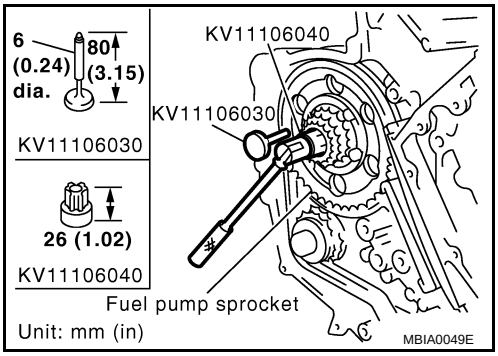

- Insert the positioning stopper pin until its flange contacts the fuel pump sprocket.

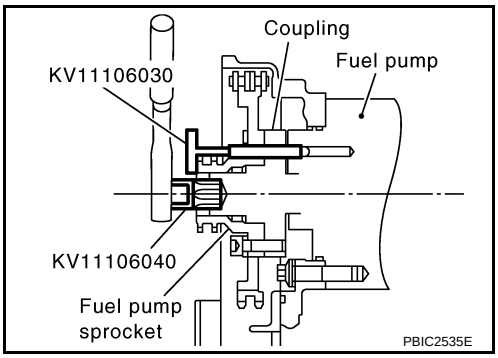

7. Using the hexagonal wrench [SST (KV11106050)] remove tightening bolts of fuel pump sprocket.

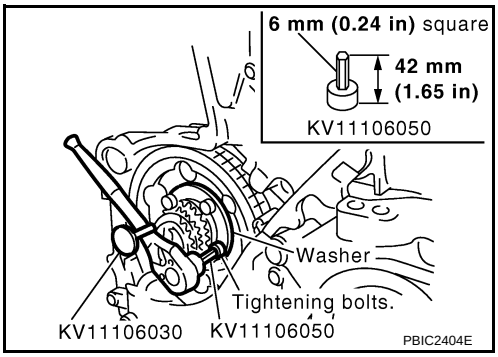

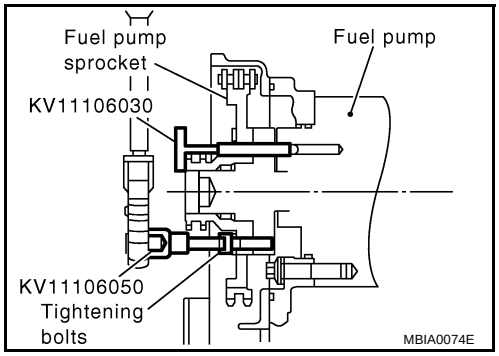

8. Using the sprocket holder [SST (KV11106060)], hold fuel pump sprocket to prevent falling.
   - Rework sprocket holder [SST (KV11106060)] to use, as shown in the figure.

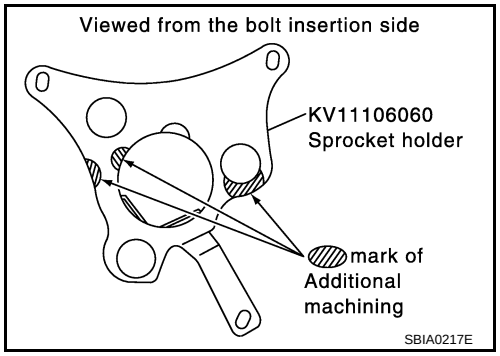

   - When the sprocket holder is installed, if the positioning stopper pin [SST (KV11106030)] interferes, pull out the positioning stopper pin approximately 10 mm (0.39 in), then install it.
   - After the sprocket holder is installed temporarily, tighten the sprocket holder after making extension bar and TORX socket (size: E10) (commercial service tool) insert into the machined bore.
   - The length of the sprocket holder mounting bolts should be approximately 15 mm (0.59 in) (M6 thread length).
   - Check that the a- and b-faces of the sprocket holder contact the bottom side of the sprocket (small diameter side).

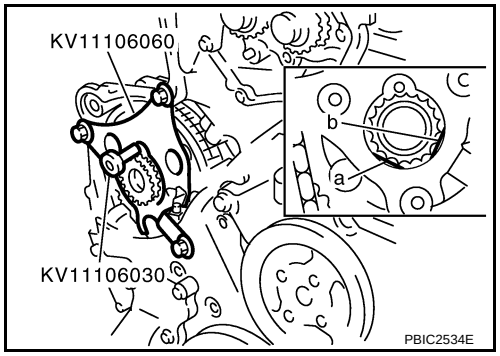

   CAUTION:
   Never remove the sprocket holder [SST (KV11106060)] until fuel pump is installed.
   - After the sprocket holder is installed, pull out the positioning stopper pin from fuel pump sprocket.

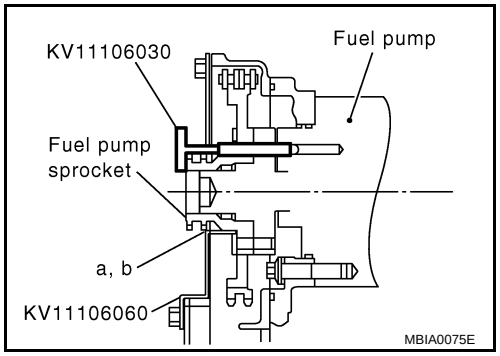

9. Using the extension bar and the TORX socket (size: E10) (commercial service tool), remove the tightening bolts.
   CAUTION:
   Never disassemble or adjust fuel pump.

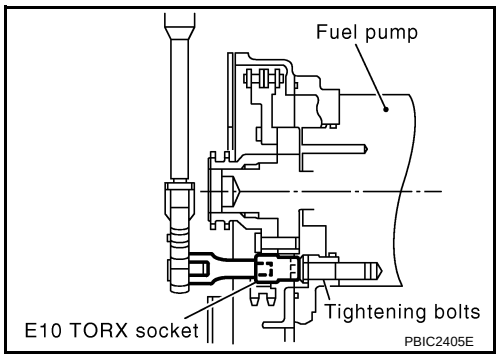

10. Remove the fuel pump toward the rear of engine.
    CAUTION:
    For removal, be careful not to drop the seal washer into the engine.
    NOTE:
    The seal washer of the tightening bolts cannot be reused.
11. Remove adjusting shim.
12. Attach a suitable tool in the M8 bolt hole on coupling.

13. Loosen sprocket nut with the TORX wrench [SST (KV11106040)].

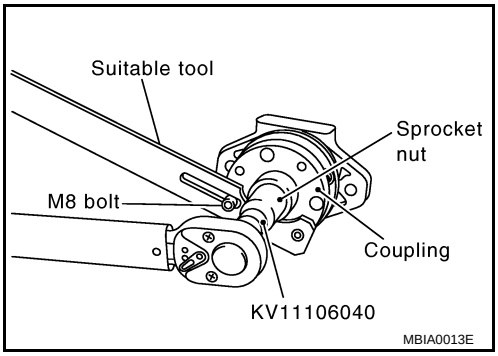

14. Remove coupling with a suitable puller.

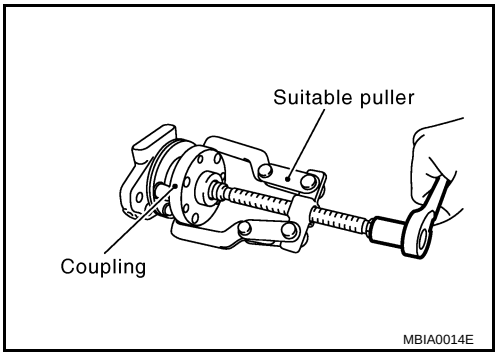

15. Remove spacer from fuel pump.
16. Remove oil seal from spacer.

INSPECTION AFTER REMOVAL

Timing Chain

Check for cracks and excessive wear at roller links. Replace timing chain if necessary.

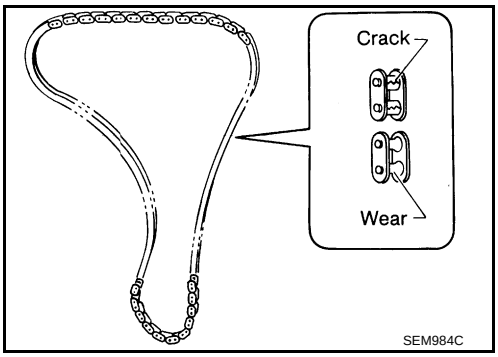

INSTALLATION

1. Install new oil seal to spacer.

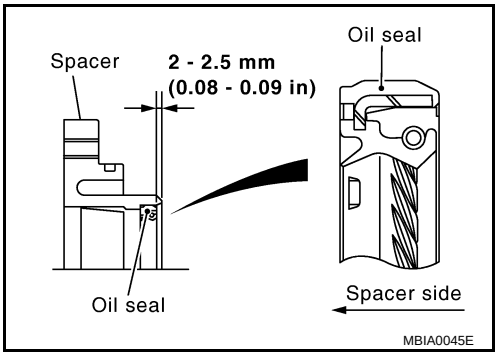

2. Install spacer to fuel pump.

3. Install coupling to fuel pump of spacer.
   - Using the TORX wrench [SST (KV11106040)], tighten the sprocket nut to fix the coupling.

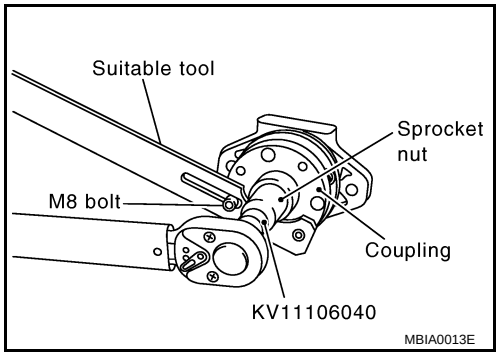

4. Install adjusting shim.
   - For shim adjustment, measure dimension L [Distance between front surface of coupling and the fuel pump flange (spacer)] at two opposing points near the coupling bolt center. Use the average of these two measurements to select the shim grade that marked on adjusting shim.

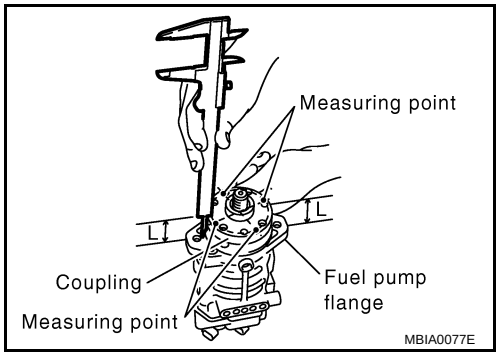

   - The shim adjustment is required only when the fuel pump is replaced.

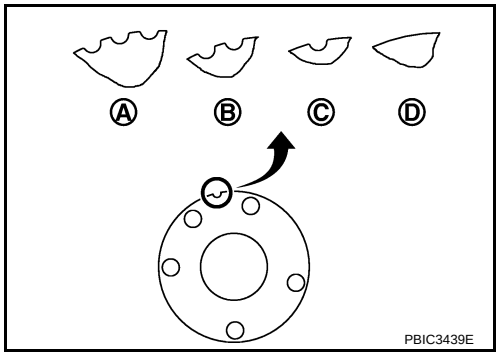

Part No. of adjusting shim	Grade number	Measuring dimension L mm (in)	Type
16614 8H800	0.5 t	39.23 - 39.77 (1.5445 - 1.5657)	A
16614 8H810	1.0 t	38.76 - 39.23 (1.5260 - 1.5445)	B
16614 8H860	1.2 t	38.57 - 38.76 (1.5185 - 1.5260)	C
16614 8H820	1.6 t	38.18 - 38.57 (1.5031 - 1.5185)	D
16614 8H800 + 16614 8H860	0.5 t + 1.2 t	38.09 - 38.18 (1.4996 - 1.5031)	A + C
16614 8H810 + 16614 8H810	1.0 t + 1.0 t	37.80 - 38.09 (1.4882 - 1.4996)	B + B
16614 8H860 + 16614 8H810	1.2 t + 1.0 t	37.60 - 37.80 (1.4803 - 1.4882)	C + B
16614 8H820 + 16614 8H810	1.6 t + 1.0 t	37.21 - 37.60 (1.4650 - 1.4803)	D + B

5. Before fuel pump is installed, check that spacer and the 6 mm (0.24 in) dia. hole on coupling are aligned.

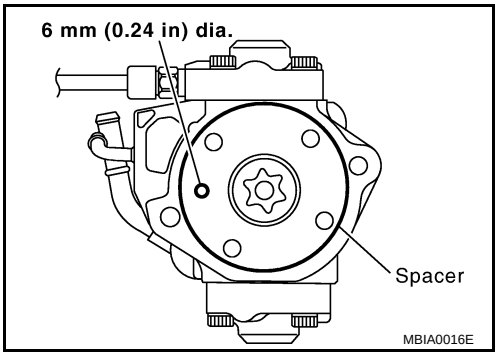

6. Insert fuel pump to the mounting position from the rear side of the engine, and install the tightening bolts with seal washer.
CAUTION:
Be careful not to drop the seal washer into engine.

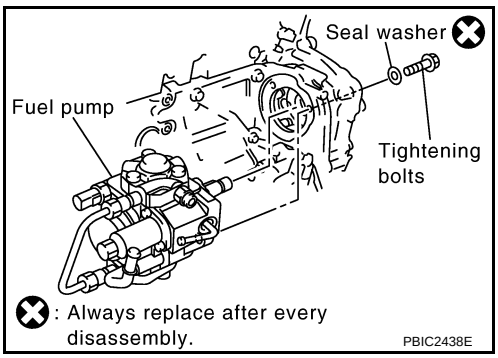

7. Using the extension bar and the TORX socket (size: E10) (commercial service tool), tighten the tightening bolts of fuel pump.
8. Remove the sprocket holder [SST (KV11106060)].

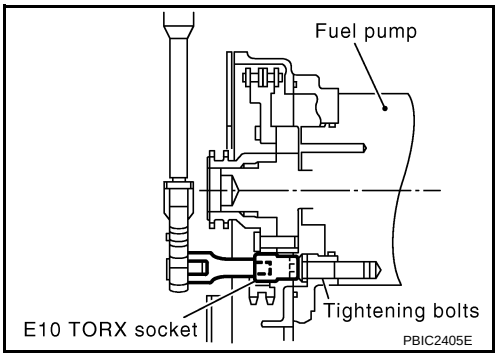

9. Using the TORX wrench [SST (KV11106040)], turn the pump shaft gradually to adjust the position of fuel pump sprocket. Then, insert the positioning stopper pin [SST (KV11106030)] to the 6 mm (0.24 in) dia. hole of the fuel pump sprocket through the pump body.
10. Remove the TORX wrench [SST (KV11106040)].

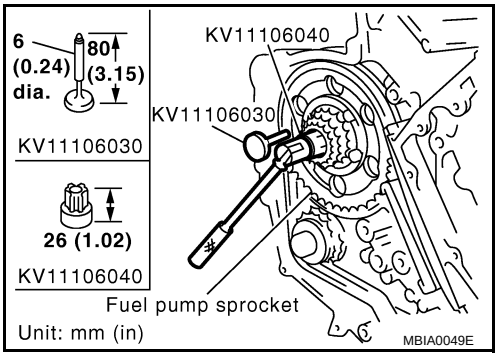

11. Using the hexagonal wrench [SST (KV11106050)], tighten the sprocket tightening bolt.
    - When the washer of the fuel pump sprocket is removed, install it with the marking “F” (front) facing the front of the engine.
12. Pull out the positioning stopper pin [SST (KV11106030)].

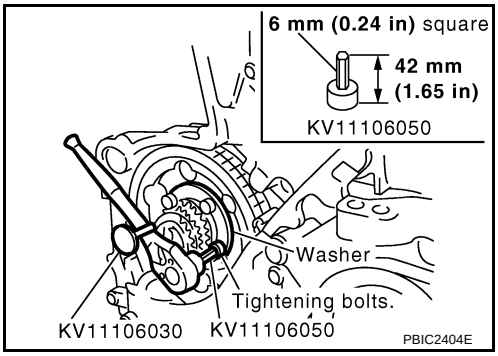

13. Install secondary timing chain. Refer to “TIMING CHAIN” in EM section.
14. Following steps below, install injection tube center. Refer to EM-8.
a. Pre-set clip and insert rubber to injection tube center.
b. Pre-tight nut of injection tube center to fuel pump and fuel rail by hand. (until seal surface touched)
c. Adjust clip dimension and tight bolt for clip to intake manifold by tool.
d. Tight nut of injection tube center to fuel pump by tool.
e. Tight nut of injection tube center to fuel rail by tool.
15. Connect the harness connector to fuel pump.
16. Install fuel hoses. Refer to EM-8.
17. Hereafter, install in the reverse order of removal.
CAUTION:
When fuel pump is replaced with new one or another one, perform fuel pump leaning value cleaning before starting engine. Refer to EC-23, "Fuel Pump Learning Value Clearing".

ON BOARD DIAGNOSTIC (OBD) SYSTEM

Introduction

INFOID:0000000003759315

The ECM has an on board diagnostic system, which detects malfunctions related to engine sensors or actuators. The ECM also records various emission-related diagnostic information including:

Emission-related diagnostic information	ISO Standard
Diagnostic Trouble Code (DTC)	Service $03 of ISO 15031-5
Freeze Frame data	Service $02 of ISO 15031-5
1st/2nd Trip Diagnostic Trouble Code (1st/2nd Trip DTC)	Service $07 of ISO 15031-5
Calibration ID	Service $09 of ISO 15031-5

The above information can be checked using procedures listed in the table below.

×: Applicable —: Not applicable

	DTC	1st trip DTC	2nd trip DTC	Freeze Frame data
CONSULT-III	×	×	×	×
GST	×	×	×	×
ECM	×	×*	×*	—

*: When DTC and 1st/2nd trip DTC simultaneously appear on the display, they cannot be clearly distinguished from each other.

The malfunction indicator (MI) on the instrument panel lights up when the same malfunction is detected in three consecutive trips (Three trip detection logic).

Three Trip Detection Logic and One Trip Detection Logic

INFOID:0000000003759316

On board diagnosis (OBD) system of this vehicle has “Three Trip Detection Logic” and “One Trip Detection Logic”. For which logic each self-diagnosis corresponds with, refer to EC-32, "Emission-Related Diagnostic Information".

“Trip” of “Three Trip Detection Logic” means a driving mode in which the self-diagnosis is performed while driving.

THREE TRIP DETECTION LOGIC

When a malfunction is detected for the first time, 1st trip DTC is stored in the ECM memory. MI does not illuminate at this stage. <1st trip>

When the same malfunction is detected again during the next driving, 2nd trip DTC is stored in the ECM memory and 1st trip DTC is cleared from the ECM memory. MI does not illuminate at this stage. <2nd trip>

When the same malfunction is detected again at the third driving, DTC and Freeze Frame Data are stored in the ECM memory and 2nd trip DTC is cleared from the ECM memory. MI illuminates at the same time when DTC is stored. <3rd trip>

In other words, DTC and Freeze Frame Data are stored and MI illuminates when the same malfunction occurs in 3 consecutive trips.

This is called “Three Trip Detection Logic”.

ONE TRIP DETECTION LOGIC

When a malfunction is detected for the first time, DTC and Freeze Frame Data are stored in the ECM memory and MI lights up. This is called “One Trip Detection Logic”. Some self-diagnoses will not illuminate MI when DTC is stored. (Refer to EC-32, "Emission-Related Diagnostic Information".) 1st/2nd trip DTC is not stored for one trip detection logic.

Emission-Related Diagnostic Information

INFOID:0000000003759317

EMISSION-RELATED DIAGNOSTIC INFORMATION ITEMS

X: Applicable —: Not applicable

DTC*1		Items (CONSULT-III screen item)	Trip	MI lighting up	Reference page
CONSULT-III GST*2	ECM*3				
U1000	1000*4	CAN COMM CIRCUIT	1	—	EC-83
P0000	**0000**	**NO DTC IS DETECTED. FURTHER TESTING MAY BE REQUIRED.**	—	—	—
P0016	0016	CMP/CKP RELATION	3	×	EC-85
P0088	0088	HIGH FUEL PRESS	3	×	EC-87
P0089	0089	FUEL PUMP	3	×	EC-89
P0093	0093	FUEL LEAK	3	×	EC-91
P0101	0101	MAF SENSOR	3	×	EC-94
P0102	0102	MAF SEN/CIRCUIT	3	×	EC-103
P0103	0103	MAF SEN/CIRCUIT	3	×	EC-103
P0112	0112	IAT SEN/CIRCUIT	3	×	EC-111
P0113	0113	IAT SEN/CIRCUIT	3	×	EC-111
P0117	0117	ECT SEN/CIRCUIT	3	×	EC-115
P0118	0118	ECT SEN/CIRCUIT	3	×	EC-115
P0122	0122	APP SEN 1/CIRCUIT	1	—	EC-119
P0123	0123	APP SEN 1/CIRCUIT	1	—	EC-119
P0182	0182	FUEL TEMP SEN/CIRC	3	×	EC-124
P0183	0183	FUEL TEMP SEN/CIRC	3	×	EC-124
P0192	0192	FRP SEN/CIRC	3	×	EC-128
P0193	0193	FRP SEN/CIRC	3	×	EC-128
P0200	0200	INJECTOR	3	×	EC-132
P0201	0201	CYL1 INJECTOR	3	×	EC-133
P0202	0202	CYL2 INJECTOR	3	×	EC-133
P0203	0203	CYL3 INJECTOR	3	×	EC-133
P0204	0204	CYL4 INJECTOR	3	×	EC-133
P0217	0217	ENG OVER TEMP	1	—	EC-138
P0222	0222	APP SEN 2/CIRCUIT	1	—	EC-147
P0223	0223	APP SEN 2/CIRCUIT	1	—	EC-147
P0335	0335	CKP SEN/CIRCUIT	3	×	EC-152
P0336	0336	CKP SENSOR	3	×	EC-157
P0340	0340	CMP SEN/CIRCUIT	3	×	EC-163
P0341	0341	CMP SENSOR	3	×	EC-168
P0380	0380	GLOW RELAY	3	×	EC-173
P0403	0403	EGR SYSTEM	3	×	EC-177
P0405	0405	EGR SENSOR	3	×	EC-184
P0406	0406	EGR SENSOR	3	×	EC-184
P0409	0409	EGR SYSTEM	3	×	EC-190
P0488	0488	EGR SYSTEM	3	×	EC-196
P0563	0563	BATTERY VOLTAGE	1	—	EC-201
P0606	0606	ECM	3	×	EC-203
P0628	0628	FUEL PUMP/CIRC	3	×	EC-205

DTC*1		Items (CONSULT-III screen item)	Trip	MI lighting up	Reference page
CONSULT-III GST*2	ECM*3				
P0629	0629	FUEL PUMP/CIRC	3	×	EC-205
P0642	0642	SENSOR PWR/CIRC1	3	×	EC-210
P0643	0643	SENSOR PWR/CIRC1	3	×	EC-210
P0652	0652	SENSOR PWR/CIRC2	3	×	EC-214
P0653	0653	SENSOR PWR/CIRC2	3	×	EC-214
P0668	0668	ECM	3	×	EC-218
P0669	0669	ECM	3	×	EC-218
P0686	0686	ECM RELAY	1	—	EC-220
P1268	1268	INJECTOR 1	1	—	EC-227
P1269	1269	INJECTOR 2	1	—	EC-227
P1270	1270	INJECTOR 3	1	—	EC-227
P1271	1271	INJECTOR 4	1	—	EC-227
P1272	1272	FRP RELIEF VALVE	3	×	EC-234
P1273	1273	FUEL PUMP	3	×	EC-234
P1274	1274	FUEL PUMP	1	×	EC-234
P1275	1275	FUEL PUMP	1	×	EC-234
P1610	1610	LOCK MODE	1	—	EL-102
P1611	1611	ID DISCORD, IMM-ECM	1	—	EL-103
P1612	1612	CHAIN OF ECM-IMMU	1	—	EL-103
P1614	1614	CHAIN OF IMMU-KEY	1	—	EL-105
P1615	1615	DIFFERENCE OF KEY	1	—	EL-106
P1616	1616	ECM	1	—	EL-106
P1622	1622	INJ ADJ VAL UNRGST	1	—	EC-254
P1623	1623	INJ ADJ VAL ERROR	1	—	EC-255
P2135	2135	APP SENSOR	1	—	EC-257
P2146	2146	INJ PWR/CIRC	3	×	EC-262
P2147	2147	INJECTOR/CIRC	3	×	EC-266
P2148	2148	INJECTOR/CIRC	3	×	EC-266
P2149	2149	INJ PWR/CIRC	3	×	EC-262
P2228	2228	BARO SEN/CIRC	3	×	EC-271
P2229	2229	BARO SEN/CIRC	3	×	EC-271

*1: 1st trip DTC No. and 2nd trip DTC No. are the same as DTC No.

*2: This number is prescribed by ISO 15031-6.

*3: In Diagnostic Test Mode II (Self-diagnostic results).

*4: The troubleshooting for this DTC needs CONSULT-III.

DTC AND 1ST/2ND TRIP DTC

The number of 1st/2nd trip DTC is the same as the number of DTC.
When a malfunction is detected during 1st trip, 1st trip DTC is stored in the ECM memory. MI does not illuminate at this time. When the same malfunction is detected in the next trip (2nd trip), 2nd trip DTC is stored in the ECM memory and 1st trip DTC is cleared from the ECM memory. MI does not illuminate at this time. In addition, DTC is stored in the ECM memory and MI lights up when the same malfunction is detected during the following consecutive trip (3rd trip).
The procedure for erasing DTC, 1st trip DTC, and 2nd trip DTC from the ECM memory is described in “HOW TO ERASE EMISSION-RELATED DIAGNOSTIC INFORMATION”.

For malfunctions in which 1st/2nd trip DTC are displayed, Refer to “EMISSION-RELATED DIAGNOSTIC INFORMATION ITEMS”.
1st/2nd trip DTC is specified in Service $07 of ISO15031-5. 1st/2nd trip DTC detection occurs without lighting up MI and therefore does not warn the driver of a malfunction.
When 1st/2nd trip DTC is detected, check, print out or write down, and erase 1st/2nd trip DTC as specified with step II of Work Flow, refer to EC-41, "Trouble Diagnosis Introduction". Then perform DTC Confirmation Procedure or Overall Function Check to try to duplicate the malfunction. If the malfunction is duplicated, it is necessary to investigate the cause again.

How to Read DTC and 1st/2nd Trip DTC

DTC and 1st/2nd trip DTC can be read by the following procedures.

With CONSULT-III

With GST

CONSULT-III or GST (Generic Scan Tool): Examples: P0117, P0335, P1268, etc.
These numbers are prescribed by ISO 15031-6.
(CONSULT-III also displays the malfunctioning parts and systems.)
A sample of CONSULT-III display for DTC and 1st/2nd trip DTC is shown in the figure. DTC and 1st/2nd trip DTC are displayed in the “SELF-DIAG RESULTS” mode of CONSULT-III.
“TIME” data shows how many times the vehicle was driven after the last detection of DTC or 1st/2nd trip DTC. When DTC or 1st/2nd trip DTC has been detected currently, “TIME” becomes “0”.

- CONSULT-III displays for DTC and 1st/2nd trip DTC become the same.
- The output of a DTC indicates a malfunction. However, GST does not indicate whether the malfunction is still occurring or has occurred in the past and has returned to normal. CONSULT-III can identify the malfunction status. Therefore the use of CONSULT-III (If available) is recommended.

FREEZE FRAME DATA

ECM records driving conditions such as calculated load value, engine coolant temperature, engine speed, vehicle speed, and intake manifold pressure at the moment a malfunction is detected.
The data stored together with DTC is called Freeze Frame Data, and is displayed on CONSULT-III or GST.
When 1st/2nd trip DTC is detected, Freeze Frame Data is not recorded.
Only a set of Freeze Frame Data can be stored in the ECM memory. When ECM records Freeze Frame Data, and another Freeze Frame Data is generated after that, the first (original) Freeze Frame Data is not updated in ECM and it remains.
When the DTC is erased from ECM memory, Freeze Frame Data is erased with DTC. The procedure for erasing DTC is described in “HOW TO ERASE EMISSION-RELATED DIAGNOSTIC INFORMATION”.

HOW TO ERASE EMISSION-RELATED DIAGNOSTIC INFORMATION

How to Erase DTC and 1st Trip DTC

WITH CONSULT-III

NOTE:

- If the ignition switch stays ON after repair work, be sure to turn ignition switch OFF once. Wait at least 10 seconds and then turn it ON (engine stopped) again.

1. Select “ENGINE” with CONSULT-III.
2. Select “SELF-DIAG RESULTS”.
3. Touch “ERASE”. (DTC in ECM will be erased.)

WITH GST

NOTE:

- If the ignition switch stays ON after repair work, be sure to turn ignition switch OFF once. Wait at least 10 seconds and then turn it ON (engine stopped) again.

NO TOOLS

NOTE:

- If the ignition switch stays ON after repair work, be sure to turn ignition switch OFF once. Wait at least 10 seconds and then turn it ON (engine stopped) again.
- **If the battery is disconnected, the emission-related diagnostic information will be lost within 24 hours.**
- **The following data are cleared when the ECM memory is erased.**

- Diagnostic trouble codes
- 1st trip diagnostic trouble codes
- 2nd trip diagnostic trouble codes
- Freeze frame data

Actual work procedures are explained using a DTC as an example. Be careful so that not only the DTC, but all of the data listed above, are cleared from the ECM memory during work procedures.

NATS (Nissan Anti-Theft System)

INFOID:0000000003759318

- **If the security indicator lights up with the ignition switch in the ON position or "NATS MALFUNCTION" is displayed on "SELF-DIAG RESULTS" screen, perform self-diagnostic results mode with CONSULT-III using NATS program card. Refer to EL-95.**
- **Confirm no self-diagnostic results of NATS is displayed before touching "ERASE" in "SELF-DAIG RESULTS" mode with CONSULT-III.**
- **When replacing ECM, initialization of NATS system and registration of all NATS ignition key IDs must be carried out with CONSULT-III using NATS program card.**
  Therefore, be sure to receive all keys from vehicle owner. Regarding the procedure of NATS initialization and all NATS ignition key ID registration, refer to CONSULT-III operation manual, NATS.

Malfunction Indicator (MI)

INFOID:0000000003759319

DESCRIPTION

The MI is located on the instrument panel.

1. The MI will light up when the ignition switch is turned ON without the engine running. This is a bulb check.
   If the MI does not light up, refer to EC-296.
2. When the engine is started, the MI should go off.
   If the MI remains on, the on board diagnostic system has detected an engine system malfunction.

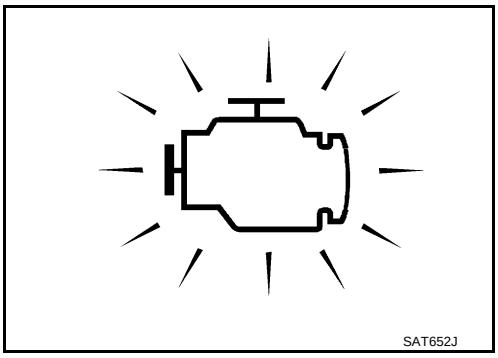

ON BOARD DIAGNOSTIC SYSTEM FUNCTION

The on board diagnostic system has the following three functions.

Diagnostic Test Mode	KEY and ENG. Status	Function	Explanation of Function
Mode I	Ignition switch in ON position Engine stopped 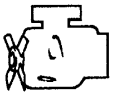	BULB CHECK	This function checks the MI bulb for damage (blown, open circuit, etc.). If the MI does not come on, check MI circuit. (See EC-296.)
	Engine running	MALFUNCTION WARNING	This is a usual driving condition. When ECM detects a malfunction, the MI will light up to inform the driver that a malfunction has been detected.
Mode II	Ignition switch in ON position Engine stopped	SELF-DIAGNOSTIC RESULTS	This function allows DTCs to be read.

HOW TO SWITCH DIAGNOSTIC TEST MODE

NOTE:

- **It is better to count the time accurately with a clock.**
- **It is impossible to switch the diagnostic mode when an accelerator pedal position sensor circuit has a malfunction.**
- **Always ECM returns to Diagnostic Test Mode I after ignition switch is turned OFF.**

How to Set Diagnostic Test Mode II (Self-diagnostic Results)

1. Confirm that accelerator pedal is fully released, turn ignition switch ON and wait 3 seconds.
2. Repeat the following procedure quickly five times within 5 seconds.

a. Fully depress the accelerator pedal.
b. Fully release the accelerator pedal.

3. Wait 7 seconds, fully depress the accelerator pedal and keep it for approx. 10 seconds until the MI starts blinking.
4. Fully release the accelerator pedal.
   ECM has entered to Diagnostic Test Mode II (Self-diagnostic results).

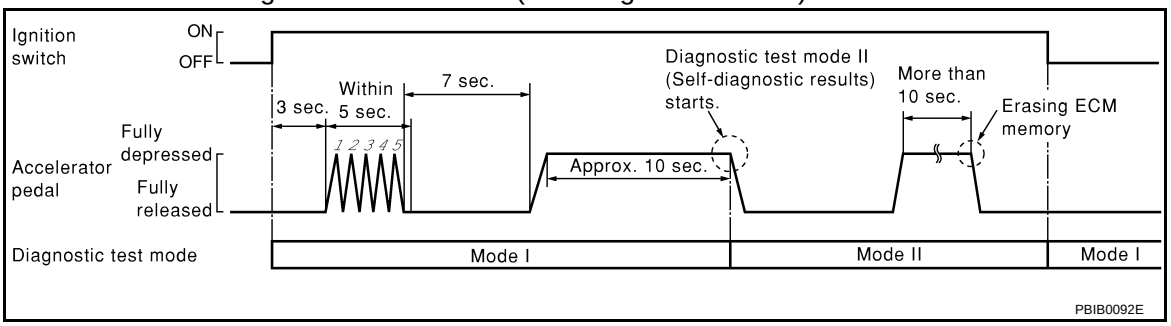

How to Erase Diagnostic Test Mode II (Self-diagnostic Results)

1. Set ECM in Diagnostic Test Mode II (Self-diagnostic results). Refer to “How to Set Diagnostic Test Mode II (Self-diagnostic Results)”.
2. Fully depress the accelerator pedal and keep it for more than 10 seconds.
   The emission-related diagnostic information has been erased from the backup memory in the ECM.
3. Fully release the accelerator pedal, and confirm the DTC 0000 is displayed.

DIAGNOSTIC TEST MODE I — BULB CHECK

In this mode, the MI on the instrument panel should stay ON. If it remains OFF, check the bulb. Refer to EC-296.

DIAGNOSTIC TEST MODE I — MALFUNCTION WARNING

MI	Condition
ON	When the malfunction is detected.
OFF	No malfunction.

These DTC numbers are clarified in Diagnostic Test Mode II (SELF-DIAGNOSTIC RESULTS)

DIAGNOSTIC TEST MODE II — SELF-DIAGNOSTIC RESULTS

In this mode, the DTC is indicated by the number of blinks of the MI as shown below. A DTC will be used as an example for how to read a code.

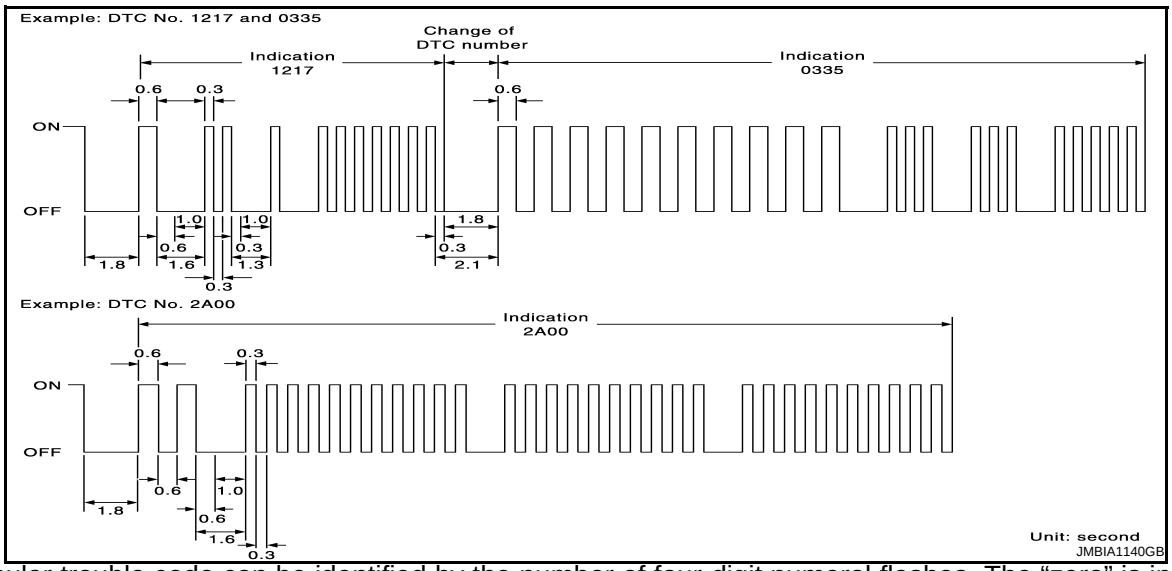

A particular trouble code can be identified by the number of four-digit numeral flashes. The “zero” is indicated by the number of ten flashes. The length of time the 1,000th-digit numeral flashes on and off is 1.2 seconds consisting of an ON (0.6-second) - OFF (0.6-second) cycle.
The 100th-digit numeral and lower digit numerals consist of a 0.3-second ON and 0.3-second OFF cycle.
A change from one digit numeral to another occurs at an interval of 1.0-second OFF. In other words, the later numeral appears on the display 1.3 seconds after the former numeral has disappeared.
A change from one trouble code to another occurs at an interval of 1.8-second OFF.
In this way, all the detected malfunctions are classified by their DTC numbers. The DTC 0000 refers to no malfunction. (See EC-32, "Emission-Related Diagnostic Information".)

How to Erase Diagnostic Test Mode II (Self-diagnostic Results)
The DTC can be erased from the back up memory in the ECM by depressing accelerator pedal. Refer to “How to Erase Diagnostic Test Mode II (Self-diagnostic Results)”.
- **If the battery is disconnected, the DTC will be lost from the backup memory within 24 hours.**
- **Be careful not to erase the stored memory before starting trouble diagnoses.**

OBD System Operation Chart

INFOID:0000000003759320

RELATIONSHIP BETWEEN MI, 1ST/2ND TRIP DTC, DTC, AND DETECTABLE ITEMS

- When the malfunction is detected for the first time, 1st trip DTC is stored in the ECM memory.
- When the same malfunction is detected during 2nd consecutive trip, 2nd trip DTC is stored and 1st trip DTC is cleared.
- When the same malfunction is detected during 3rd consecutive trip, DTC and Freeze Frame Data are stored and MI illuminates. Refer to EC-32, "Three Trip Detection Logic and One Trip Detection Logic" for details.1st/2nd trip DTC are cleared from the ECM memory.
- MI will go off after the vehicle is driven 3 consecutive times with no malfunction (driving pattern A).
- 1st/2nd trip DTC, DTC, and Freeze Frame Data will be stored until the vehicle is driven 41 times (driving pattern B) without the same malfunction recurring. “TIME” data displayed in the “SELF-DIAG RESULTS” mode of CONSULT-III shows the number of times the vehicle is driven without the same malfunction recurring.

SUMMARY CHART

Items	Trip	Counter	Driving Pattern
MI (goes off)	3	2	A
DTC, Freeze Frame Data (clear)	41	40	B
1st/2nd Trip DTC (clear)	41	40	B

Refer to “RELATIONSHIP BETWEEN MI, DTC, 1ST/ 2NDTRIP DTC AND DRIVING PATTERNS” for details of pattern A and B.

RELATIONSHIP BETWEEN MI, DTC, 1ST/ 2NDTRIP DTC AND DRIVING PATTERNS

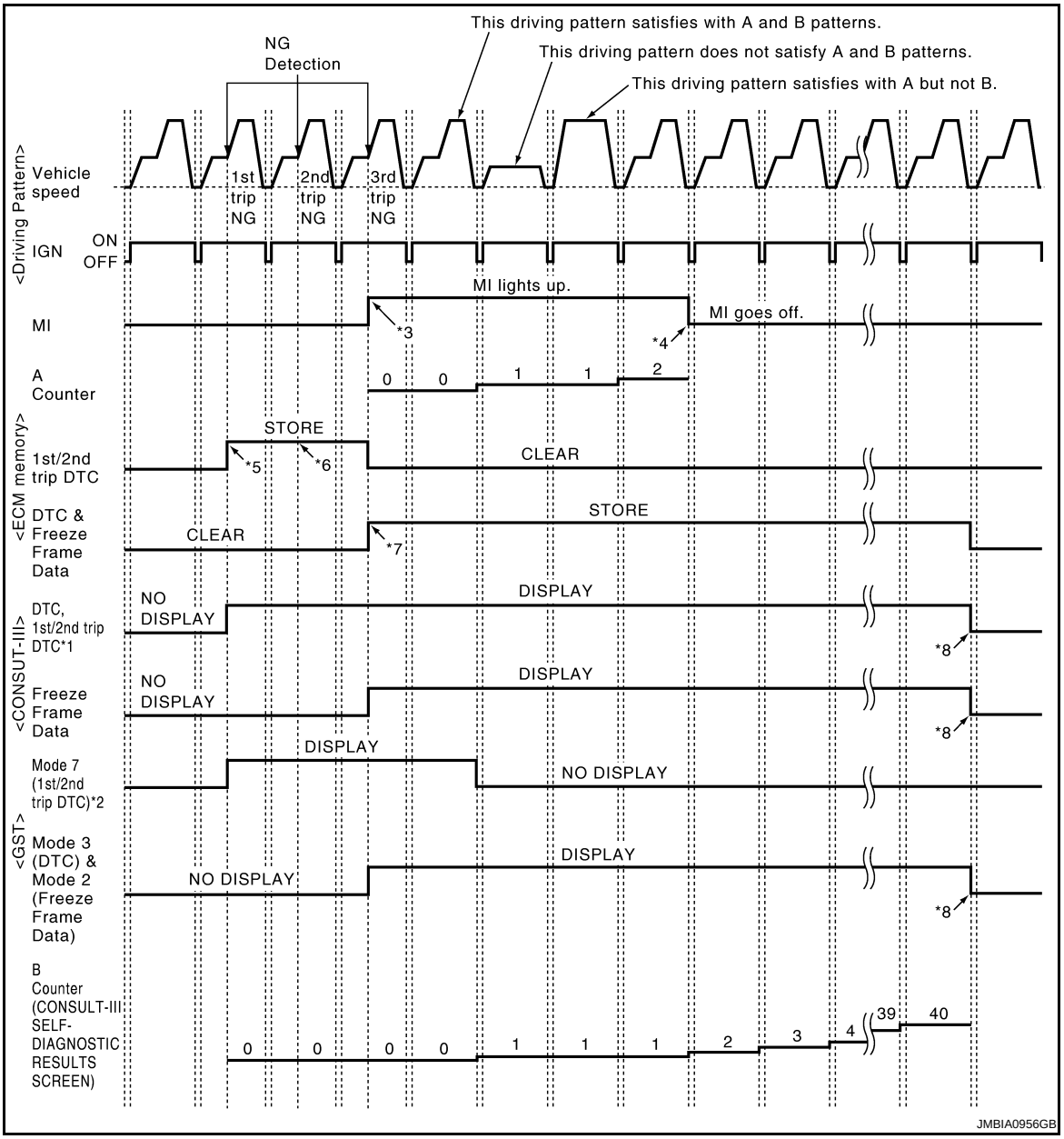

*1: CONSULT-III displays for DTC and 1st/2nd trip DTC become the same.

*2: 1st/2nd trip DTC becomes the same display in mode7 of GST.

*3: When the same malfunction is detected in three consecutive trips, MI will light up.

*4: MI will go off after vehicle is driven 3 times (pattern A) without any malfunctions.

*5: When the malfunction is detected for the first time, 1st trip DTC is stored in the ECM memory.

*6: When the same malfunction is detected during 2nd consecutive trip, 2nd trip DTC is stored and 1st trip DTC is cleared.

*7: When the same malfunction is detected during 3rd consecutive trip, DTC and Freeze Frame Data are stored.

*8: The DTC and the freeze frame data will not be displayed any longer after vehicle is driven 41 times (pattern B) without the same malfunction.

<Driving Pattern A>

Driving pattern A means the vehicle operation as follows:

Engine speed should go over 500 rpm at least 5 seconds and the DTC Confirmation Procedure is performed.

- The A counter will be cleared when the same malfunction is detected.
- The A counter will be counted up when the same malfunction is not detected.
- The MI will go off when the A counter reaches 3.

<Driving Pattern B>

Driving pattern B means the vehicle operation as follows:
Driving pattern A and (1)-(3) are satisfied.

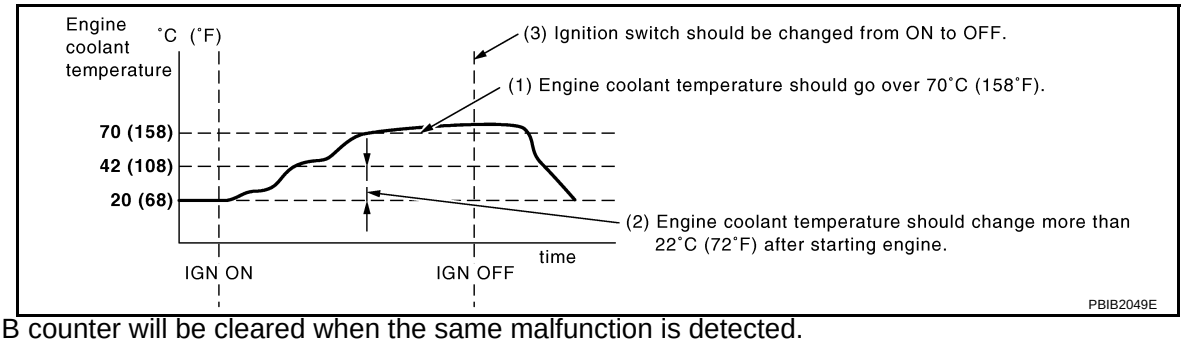

- The B counter will be cleared when the same malfunction is detected.
- The B counter will be counted up when the same malfunction is not detected.
- The DTC will not be displayed after the B counter reaches 40.

TROUBLE DIAGNOSIS

Trouble Diagnosis Introduction

INFOID:0000000003759321

INTRODUCTION

The engine has an ECM to control major systems such as fuel injection control, fuel injection timing control, glow control system, etc. The ECM accepts input signals from sensors and instantly actuators. It is essential that both input and output signals are proper and stable. At the same time, it is important that there are no malfunctions such as vacuum leaks, or other malfunctions with the engine.

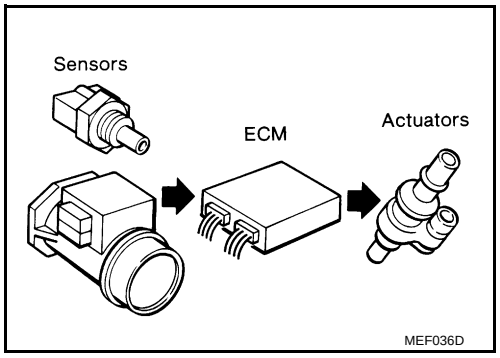

It is much more difficult to diagnose a malfunction that occurs intermittently rather than continuously. Most intermittent malfunctions are caused by poor electric connections or improper wiring. In this case, careful checking of suspected circuits may help prevent the replacement of good parts.

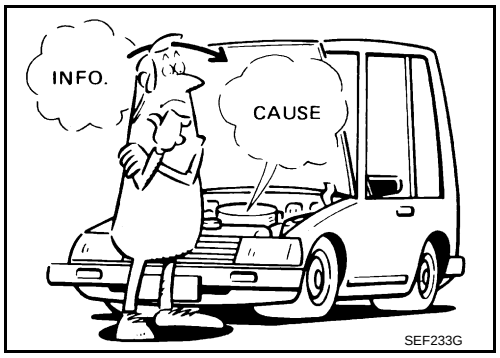

A visual check only may not find the cause of the incidents. A road test with CONSULT-III (or GST) or a circuit tester connected should be performed. Follow the “WORK FLOW”.
Before undertaking actual checks, take a few minutes to talk with a customer who approaches with a driveability complaint. The customer can supply good information about such incidents, especially intermittent ones. Find out what symptoms are present and under what conditions they occur. A Diagnostic Worksheet like the example on “WORK FLOW” should be used.
Start your diagnosis by looking for conventional incidents first. This will help troubleshoot driveability incidents on an electronically controlled engine vehicle.

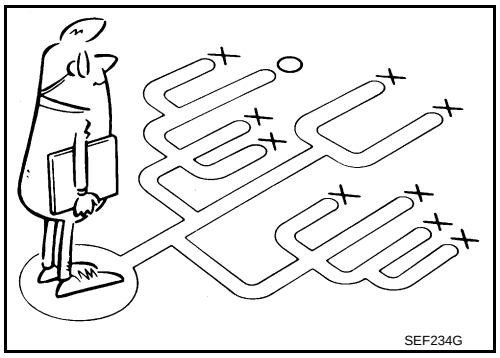

WORK FLOW

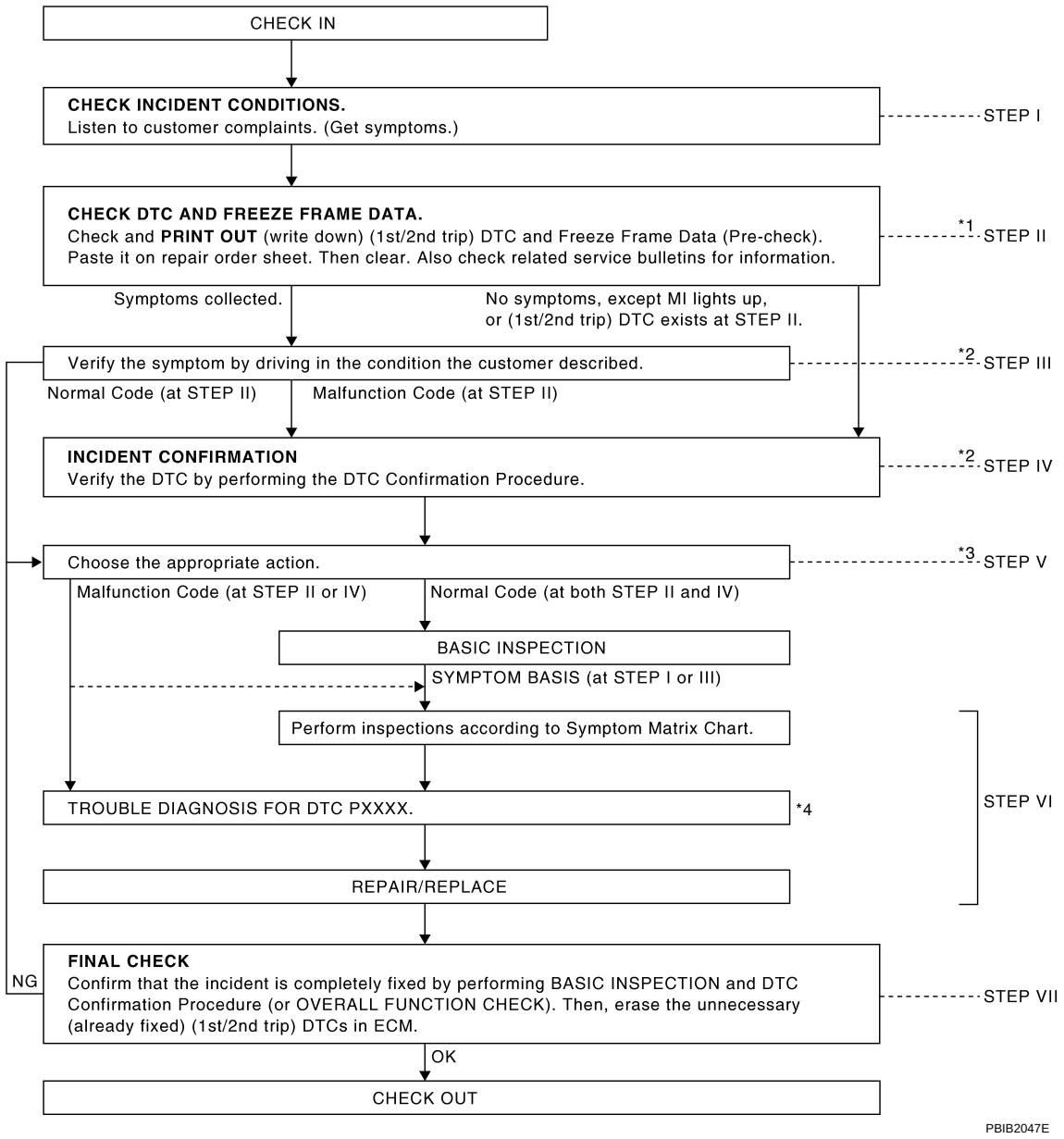

*1 If time data of “SELF-DIAG RESULTS” is other than “0”, perform EC-70.

*2 If the incident cannot be verified, perform EC-70.

*3 If the on board diagnostic system cannot be performed, check main power supply and ground circuit. Refer to EC-71.

*4 If malfunctioning part cannot be detected, perform EC-70.

Description for Work Flow

STEP	DESCRIPTION
STEP I	Get detailed information about the conditions and the environment when the incident/symptom occurred using the “DIAGNOSTIC WORK SHEET”.
STEP II	Before confirming the concern, check and write down (print out using CONSULT-III or GST) the (1st/2nd trip) DTC and the freeze frame data (When 1st/2nd trip DTC is detected, Freeze Frame Data is not recorded.), then erase the DTC and the data. (Refer to EC-32, "Emission-Related Diagnostic Information".) The (1st/2nd trip) DTC and the freeze frame data can be used when duplicating the incident at STEP III & IV. If the incident cannot be verified, perform EC-70. Study the relationship between the cause, specified by (1st/2nd trip) DTC, and the symptom described by the customer. (The Symptom Matrix Chart will be useful. See EC-48, "Symptom Matrix Chart".) Also check related service bulletins for information.
STEP III	Try to confirm the symptom and under what conditions the incident occurs. The DIAGNOSTIC WORK SHEET and the freeze frame data are useful to verify the incident. Connect CONSULT-III to the vehicle and check real time diagnosis results. If the incident cannot be verified, perform EC-70. If the malfunction code is detected, skip STEP IV and perform STEP V.
STEP IV	Try to detect the (1st/2nd trip) DTC by driving in (or performing) the DTC Confirmation Procedure. Check and read the (1st/2nd trip) DTC and freeze frame data by using CONSULT-III or GST. If the incident cannot be verified, perform EC-70. In case the DTC Confirmation Procedure is not available, perform the Overall Function Check instead. The (1st/2nd trip) DTC cannot be displayed by this check, however, this simplified check is an effective alternative. The NG result of the Overall Function Check is the same as the (1st/2nd trip) DTC detection.
STEP V	Take the appropriate action based on the results of STEP I through IV. If the malfunction code is indicated, proceed to TROUBLE DIAGNOSIS FOR DTC PXXXX. If the normal code is indicated, proceed to the BASIC INSPECTION. (Refer to EC-45, "Basic Inspection".) Then perform inspections according to the Symptom Matrix Chart. (Refer to EC-48, "Symptom Matrix Chart".)
STEP VI	Identify where to begin diagnosis based on the relationship study between symptom and possible causes. Inspect the system for mechanical binding, loose connectors or wiring damage using (tracing) Harness Layouts. Check the voltage of the related ECM terminals or monitor the output data from the related sensors with CONSULT-III. Refer to EC-57, "ECM Terminal and Reference Value", EC-68, "CONSULT-III Reference Value in Data Monitor Mode". The Diagnostic Procedure in EC section contains a description based on open circuit inspection. A short circuit inspection is also required for the circuit check in the Diagnostic Procedure. For details, refer to “SERVICE INFORMATION FOR ELECTRICAL INCIDENT”. Repair or replace the malfunction parts. If malfunctioning part cannot be detected, perform EC-70.
STEP VII	Once you have repaired the circuit or replaced a component, you need to run the engine in the same conditions and circumstances which resulted in the customer's initial complaint. Perform the DTC Confirmation Procedure and confirm the normal code [DTC No. P0000] is detected. If the incident is still detected in the final check, perform STEP VI by using a method different from the previous one. Before returning the vehicle to the customer, be sure to erase the unnecessary (already fixed) (1st/2nd trip) DTC in ECM. (Refer to EC-32, "Emission-Related Diagnostic Information".)

DIAGNOSTIC WORK SHEET

There are many operating conditions that lead to the malfunction of engine components. A good grasp of such conditions can make troubleshooting faster and more accurate.

In general, each customer feels differently about an incident. It is important to fully understand the symptoms or conditions for a customer complaint.

Utilize a diagnostic worksheet like the one shown below in order to organize all the information for troubleshooting.

KEY POINTS

WHAT ..... Vehicle & engine model
WHEN ..... Date, Frequencies
WHERE..... Road conditions
HOW ..... Operating conditions, Weather conditions, Symptoms

SEF907L

Worksheet Sample

Customer name MR/MS		Model & Year	VIN
Engine #		Trans.	Mileage
Incident Date		Manuf. Date	In Service Date
Symptoms	☐ Startability	☐ Impossible to start ☐ No combustion ☐ Partial combustion ☐ Partial combustion affected by throttle position ☐ Partial combustion when engine is cool ☐ Possible but hard to start ☐ Others [ ]	
	☐ Idling	☐ No fast idle ☐ Unstable ☐ High idle ☐ Low idle ☐ Others [ ]	
	☐ Driveability	☐ Stumble ☐ Surge ☐ Knock ☐ Lack of power ☐ Others [ ]	
	☐ Engine stall	☐ At the time of start ☐ While idling ☐ While accelerating ☐ While decelerating ☐ Just after stopping ☐ While loading	
Incident occurrence		☐ Just after delivery ☐ Recently ☐ In the morning ☐ At night ☐ In the daytime	
Frequency		☐ All the time ☐ Under certain conditions ☐ Sometimes	
Weather conditions		☐ Not affected	
	Weather	☐ Fine ☐ Raining ☐ Snowing ☐ Others [ ]	
	Temperature	☐ Hot ☐ Warm ☐ Cool ☐ Cold ☐ Humid ˚F	
Engine conditions		☐ Cold ☐ During warm-up ☐ After warm-up Engine speed 0 2,000 4,000 6,000 8,000 rpm	
Road conditions		☐ In town ☐ In suburbs ☐ Highway ☐ Off road (up/down)	
Driving conditions		☐ Not affected ☐ At starting ☐ While idling ☐ At racing ☐ While accelerating ☐ While cruising ☐ While decelerating ☐ While turning (RH/LH) Vehicle speed 0 10 20 30 40 50 60 MPH	
Malfunction indicator		☐ Turned on ☐ Not turned on	

MTBL0533

DTC Inspection Priority Chart

INFOID:0000000003759322

If some DTCs are displayed at the same time, perform inspections one by one based on the following priority chart.

Priority	Detected items (DTC)
1	• U1000 CAN communication line • P0016 Crankshaft position - camshaft position correlation • P0101 P0102 P0103 Mass air flow sensor • P0112 P0113 Intake air temperature sensor • P0117 P0118 Engine coolant temperature sensor • P0122 P0123 P0222 P0223 P2135 Accelerator pedal position sensor • P0182 P0183 Fuel pump temperature sensor • P0192 P0193 Fuel rail pressure sensor • P0335 P0336 Crankshaft position sensor • P0340 P0341 Camshaft position sensor • P0563 Battery voltage • P0606 P0668 P0669 ECM • P0642 P0643 P0652 P0653 Sensor power supply • P1610 - P1616 NATS • P1622 P1623 Injector adjustment value • P2228 P2229 Barometric pressure sensor
2	• P0089 P0628 P0629 P1272 - P1275 Fuel pump • P0200 - P0204 P1268 - P1271 P2146 - P2149 Fuel injector • P0380 Glow relay • P0405 P0406 EGR volume control valve control position sensor • P0686 ECM relay
3	• P0088 P0093 Fuel system • P0217 Engine over temperature (OVERHEAT) • P0403 P0409 P0488 EGR function

Basic Inspection

INFOID:0000000003759324

Precaution:
Perform Basic Inspection without electrical or mechanical loads applied.
- **Headlamp switch is OFF.**
- For vehicles equipped with daytime light systems, perform one of the following procedures before starting engine not to illuminate headlamps.
- Apply parking brake
- Set lighting switch to the 1st position
- **Air conditioner switch is OFF.**
- **Rear defogger switch is OFF.**
- **Steering wheel is in the straight-ahead position, etc.**

1. INSPECTION START

1. Check service records for any recent repairs that may indicate a related malfunction.
2. Check the current need for scheduled maintenance, especially for fuel filter and air cleaner filter. Refer to MA-3 (For Europe),MA-8 (For Australia).
3. Open engine hood and check the following:
- Harness connectors for improper connections
- Vacuum hoses for splits, kinks, or improper connections
- Wiring for improper connections, pinches, or cuts
4. Start engine and warm it up to the normal operating temperature.

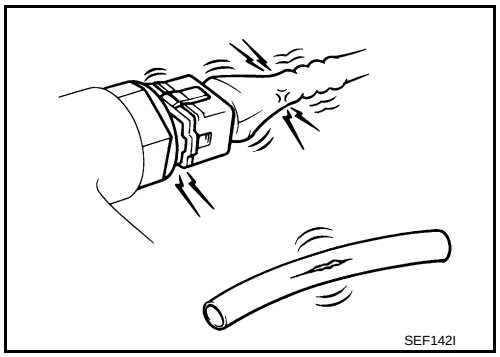

>> GO TO 2.

2. PREPARATION FOR CHECKING IDLE SPEED

With CONSULT-III
Connect CONSULT-III to the data link connector.
Without CONSULT-III
Install diesel tacho tester to the vehicle.

>> GO TO 3.

3. CHECK IDLE SPEED

With CONSULT-III
1. Select “CKPS·RPM (TDC)” in “DATA MONITOR” mode with CONSULT-III.
2. Read idle speed.

M/T: 750±25 rpm (in Neutral position)

Without CONSULT-III
Read idle speed.

M/T: 750±25 rpm (in Neutral position)

OK or NG

OK >> **INSPECTION END**
NG >> GO TO 4.

4. CHECK FOR INTAKE AIR LEAK

Listen for an intake air leak after the mass air flow sensor.

OK or NG

OK >> GO TO 5.
NG >> Repair or replace.

5. BLEED AIR FROM FUEL SYSTEM

1. Stop engine.
2. Use priming pump to bleed air from fuel system. Refer to EC-22, "Fuel Filter".

>> GO TO 6.

6. CHECK IDLE SPEED AGAIN

With CONSULT-III
1. Start engine and let it idle.
2. Select “CKPS·RPM (TDC)” in “DATA MONITOR” mode with CONSULT-III.
3. Read idle speed.

M/T: 750±25 rpm (in Neutral position)

Without CONSULT-III
Read idle speed.

M/T: 750±25 rpm (in Neutral position)

OK or NG

OK >> **INSPECTION END**
NG >> GO TO 7.

7. DRAIN WATER FROM FUEL FILTER

Drain water from fuel filter. Refer to EC-22, "Fuel Filter".

>> GO TO 8.

8. CHECK IDLE SPEED AGAIN

With CONSULT-III

1. Start engine and let it idle.
2. Select “CKPS·RPM (TDC)” in “DATA MONITOR” mode with CONSULT-III.
3. Read idle speed.

M/T: 750±25 rpm (in Neutral position)

Without CONSULT-III

Read idle speed.

M/T: 750±25 rpm (in Neutral position)

OK or NG

OK >> **INSPECTION END**
NG >> GO TO 9.

9. CHECK AIR CLEANER FILTER

Check air cleaner filter for clogging or breaks.

OK or NG

OK >> GO TO 10.
NG >> Replace air cleaner filter.

10. CHECK BATTERY VOLTAGE

Check battery voltage.

Voltage: More than 12.13 V

OK or NG

OK >> GO TO 12.
NG >> GO TO 11.

11. CHECK BATTERY

Refer to EL-12.

OK or NG

OK >> Check charging system. Refer to “BATTERY” in EL section.
NG >> Repair or replace.

12. CHECK COMPRESSION PRESSURE

Check compression pressure. Refer to “MEASUREMENT OF COMPRESSION PRESSURE” in EM section.

OK or NG

OK >> GO TO 13.
NG >> Follow the instruction of “CHECKING COMPRESSION PRESSURE”.

13. CHECK IDLE SPEED AGAIN

With CONSULT-III

1. Start engine and let it idle.
2. Select “CKPS·RPM (TDC)” in “DATA MONITOR” mode with CONSULT-III.
3. Read idle speed.

M/T: 750±25 rpm (in Neutral position)

Without CONSULT-III

Read idle speed.

M/T: 750±25 rpm (in Neutral position)

OK or NG

OK >> **INSPECTION END**
NG >> 1. Replace fuel injector.
2. GO TO 3.

Symptom Matrix Chart

INFOID:0000000003759325

SYSTEM — Basic engine control system	SYMPTOM													Reference page
	HARD/NO START/RESTART (EXCP. HA)				ENGINE STALL			HESITATION/SURGING/FLAT SPOT	KNOCK/DETONATION	LACK OF POWER	POOR ACCELERATION	HI IDLE	LOW IDLE	
	NO START (with first firing)	NO START (without first firing)	HARD TO START WHEN ENGINE IS COLD	HARD TO START WHEN ENGINE IS HOT	AT IDLE	DURING DRIVING	WHEN DECELERATING							
Warranty symptom code	AA				AB			AC	AD	AE		AF		
Fuel pump	5	5	5	5	5	5	5	5		5	5		5	—
Fuel filter	1	1	1	1						1				EC-22
Fuel injector	3	3	3	3	3	3	3	3	3	4	4	3	3	EC-133
Glow control system	1	1	1	1					1					EC-273
Engine body	3	3	3	3	3	3	3		3	4	4		3	EM-18
EGR system										3	3			EC-177, EC-190, EC-196
Air cleaner and duct										3	3			Refer to Service Manual
Fuel rail pressure relief valve	3	3	3	3	3	3	3	3		3	3		3	EC-91

SYSTEM — Basic engine control system		SYMPTOM													Reference page
		HARD/NO START/RESTART (EXCP. HA)				ENGINE STALL									
		NO START (with first firing)	NO START (without first firing)	HARD TO START WHEN ENGINE IS COLD	HARD TO START WHEN ENGINE IS HOT	AT IDLE	DURING DRIVING	WHEN DECELERATING	HESITATION/SURGING/FLAT SPOT	KNOCK/DETONATION	LACK OF POWER	POOR ACCELERATION	HI IDLE	LOW IDLE	
Warranty symptom code		AA				AB			AC	AD	AE		AF		
ENGINE CONTROL	Fuel pump circuit	4	4	4	4	4	4	4	4		4	4		4	EC-205
	Fuel injector circuit	1	1	1	1	1	1	1	1	1	1	1	1	1	EC-133
	Fuel injector adjustment value								1	1	1	1			EC-22
	Mass air flow sensor circuit								1		1	1			EC-94, EC-103
	Engine coolant temperature circuit			1		1		1			1			1	EC-115
	Vehicle speed signal circuit											1			EL-111
	Accelerator pedal position sensor circuit								1		1	1			EC-119, EC-147, EC-257
	Fuel rail pressure sensor circuit	1	1	1	1						1				EC-128
	Crankshaft position sensor circuit		1	1	1	1	1	1	1	1	1	1			EC-152, EC-157
	Camshaft position sensor circuit			3	3						3				EC-163, EC-168
	Start signal circuit	1	1	1	1	1		1	1		1	1			EC-293
	Ignition switch circuit		1			1	1	1							EC-71
	Heat up switch circuit												1		EC-280
	Power supply for ECM circuit		1			1	1	1							EC-71
	Cooling fan relay circuit														EC-138
	Glow relay circuit	1	1	1	1										EC-173
	ECM relay (Self-shutoff) circuit		1				1	1	1						EC-220
	ECM	2	2	2	2	2	2	2	2	2	2	2	2	2	EC-203, EC-218, EC-271
NATS (Nissan Anti-theft System)			1												EL-95

1 - 5: The numbers refer to the order of inspection.

(continued on next table)

SYSTEM — Basic engine control system	SYMPTOM											Reference page
	ROUGH IDLE/HUNTING	IDLING VIBRATION	SLOW/NO RETURN TO IDLE	OVERHEAT/HIGH ENGINE COOLANT TEMPERATURE	EXCESSIVE FUEL CONSUMPTION	EXCESSIVE OIL CONSUMPTION	ABNORMAL SMOKE COLOR		DEAD BATTERY (UNDER CHARGE)	Malfunction indicator illuminates.	Can be detected by CONSULT-III?	
							BLACK SMOKE	WHITE SMOKE				
Warranty symptom code	AG	AH	AJ	AK	AL	AM	AP		HA			
Fuel pump	5	5	5		5		5			1	1	—
Fuel filter							1					EC-22
Fuel injector	3	3	3		4		4	4		1	1	EC-133
Glow control system								1				EC-273
Engine body		3	3	3	3	1		3				EM-18
EGR system							3					EC-177, EC-190, EC-196
Air cleaner and duct							3					Refer to Service Manual
Fuel rail pressure relief valve	3	3	3		3		3			1	1	EC-91

SYSTEM — Basic engine control system		SYMPTOM											Reference page
		ROUGH IDLE/HUNTING	IDLING VIBRATION	SLOW/NO RETURN TO IDLE	OVERHEAT/HIGH ENGINE COOLANT TEMPERATURE	EXCESSIVE FUEL CONSUMPTION	EXCESSIVE OIL CONSUMPTION	ABNORMAL SMOKE COLOR: BLACK SMOKE	ABNORMAL SMOKE COLOR: WHITE SMOKE	DEAD BATTERY (UNDER CHARGE)	Malfunction indicator illuminates.	Can be detected by CONSULT-III?	
Warranty symptom code		AG	AH	AJ	AK	AL	AM	AP		HA			
ENGINE CONTROL	Fuel pump circuit	4	4	4		4					1	1	EC-239
	Fuel injector circuit	1	1	1		1		1	1		1	1	EC-133
	Fuel injector adjustment value	1	1			1		1	1			1	EC-22
	Mass air flow sensor circuit							1			1	1	EC-94, EC-103
	Engine coolant temperature circuit	1	1		1			1			1	1	EC-115
	Vehicle speed signal circuit										1	1	EL-111
	Accelerator pedal position sensor circuit			1							1	1	EC-119, EC-147, EC-257
	Fuel rail pressure sensor circuit							1			1	1	EC-128
	Crankshaft position sensor circuit	1	1								1	1	EC-152, EC-157
	Camshaft position sensor circuit										1	1	EC-163, EC-168
	Start signal circuit												EC-293
	Ignition switch circuit												EC-71
	Heat up switch circuit												EC-280
	Power supply for ECM circuit										1	1	EC-71
	Cooling fan relay circuit				2								EC-138
	Glow relay circuit								1				EC-173
	ECM relay (Self-shutoff) circuit											1	EC-220
	ECM	2	2	2	2	2	2	2	2	2	2	2	EC-203, EC-218, EC-271
NATS (Nissan Anti-theft System)												1	EL-95

1 - 5: The numbers refer to the order of inspection.

Engine Control Component Parts Location

INFOID:0000000003759326

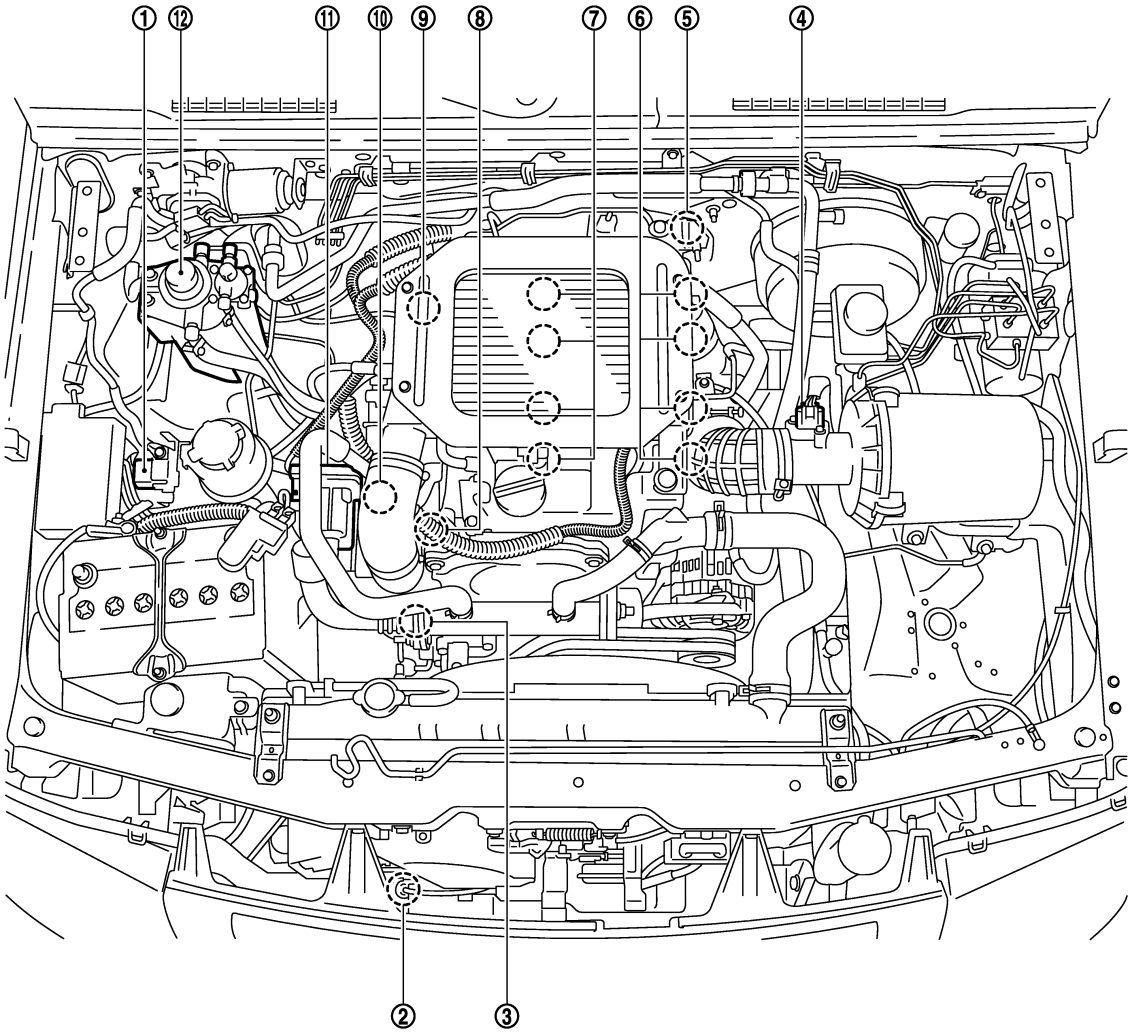

JMBIA1284ZZ

1. Glow relay
2. Cooling fan motor
3. Engine coolant temperature sensor
4. Mass air flow sensor
5. Camshaft position sensor
6. Glow plug
7. Fuel injector
8. Fuel rail pressure sensor
9. Fuel rail pressure relief valve
10. Fuel Pump
11. EGR volume control valve
12. Fuel filter

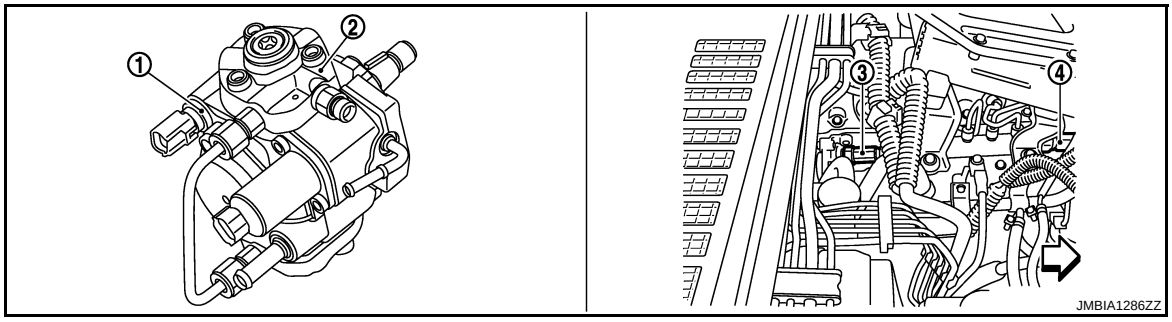

1. Fuel pump temperature sensor
2. Fuel pump
3. Fuel rail pressure relief valve
4. Fuel rail pressure sensor

⇦ : Vehicle front

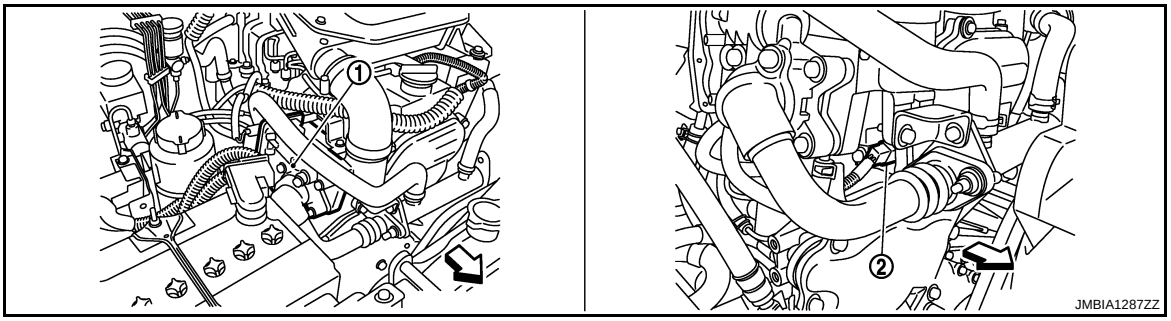

1. Glow relay
2. Engine coolant temperature sensor

⇦ : Vehicle front

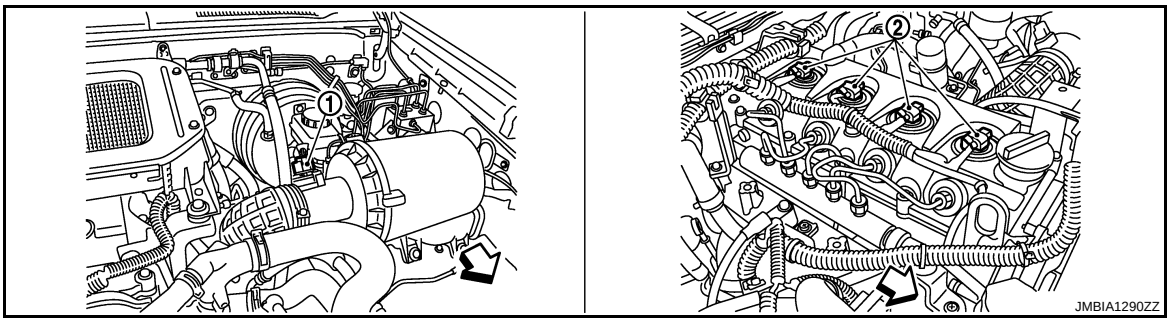

1. Mass air flow sensor
2. Fuel injector

⇦ : Vehicle front

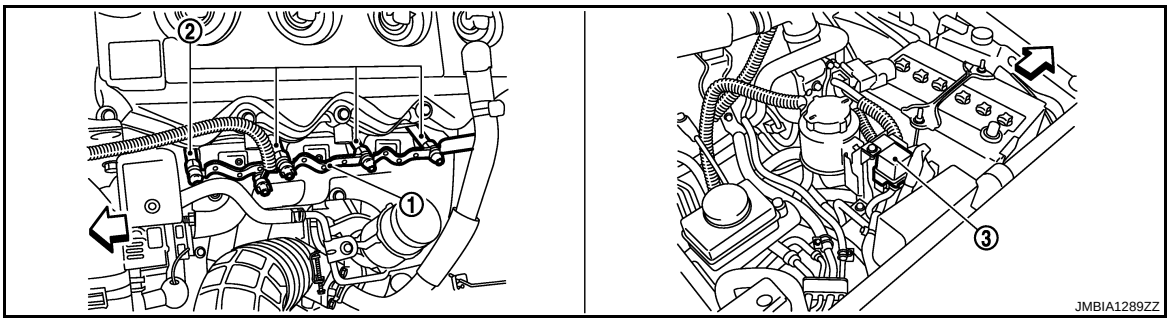

1. Glow plug connecting plate
2. Glow plug
3. Glow relay

⇦ : Vehicle front

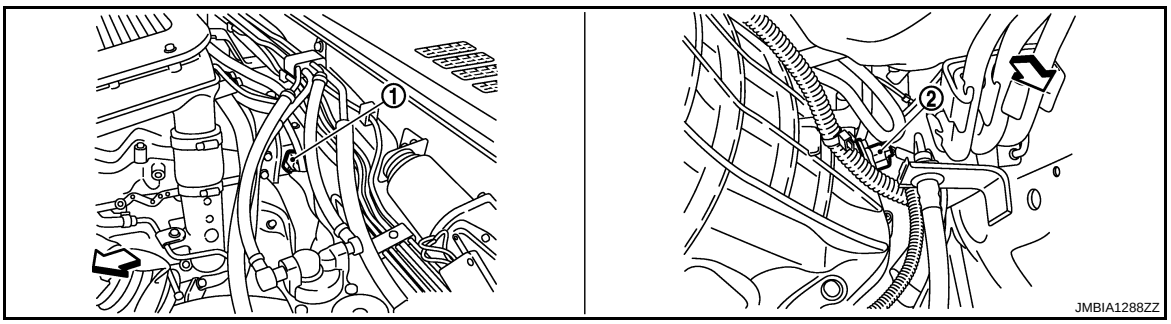

1. Camshaft position sensor
2. Crankshaft position sensor

⇦ : Vehicle front

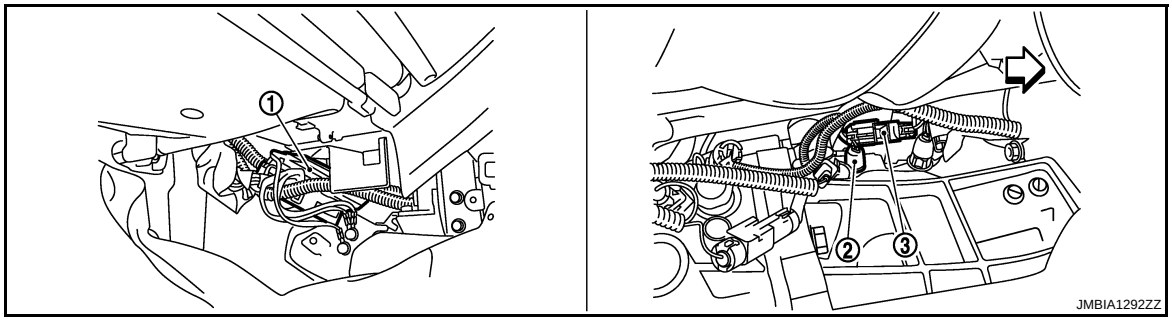

1. ECM
2. PNP switch
3. PNP switch harness connector

⇦ : Vehicle front

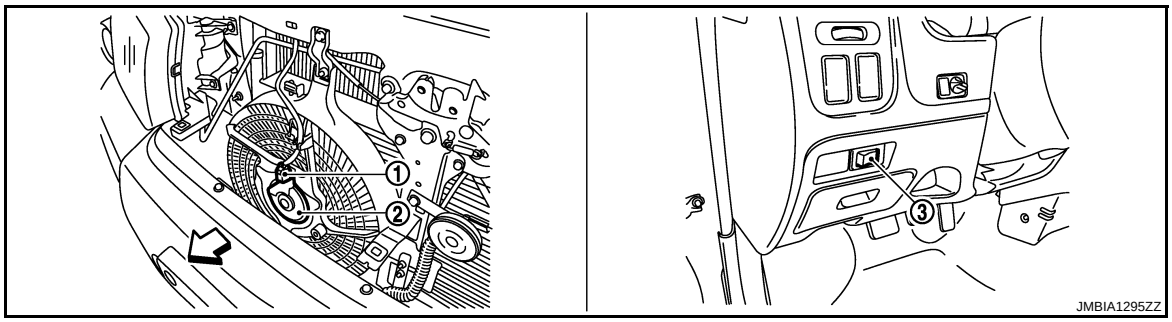

1. Cooling fan motor connector
2. Cooling fan motor
3. Heat up switch

⇦ : Vehicle front

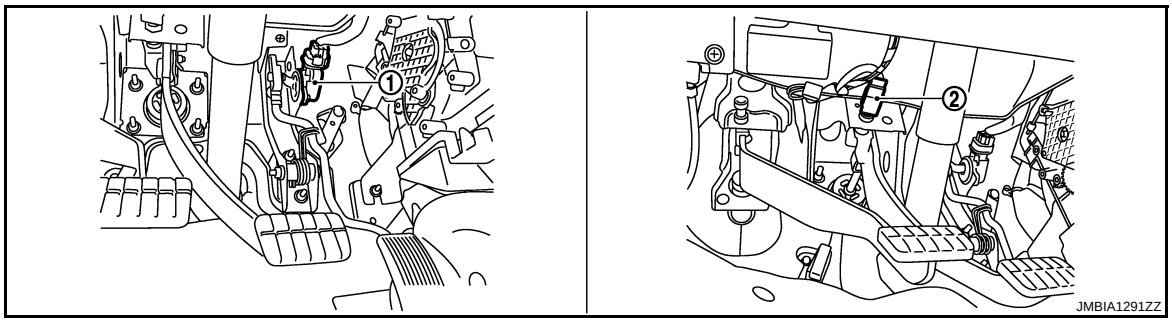

1. Accelerator pedal position sensor
2. Stop lamp switch

Circuit Diagram

INFOID:0000000003759327

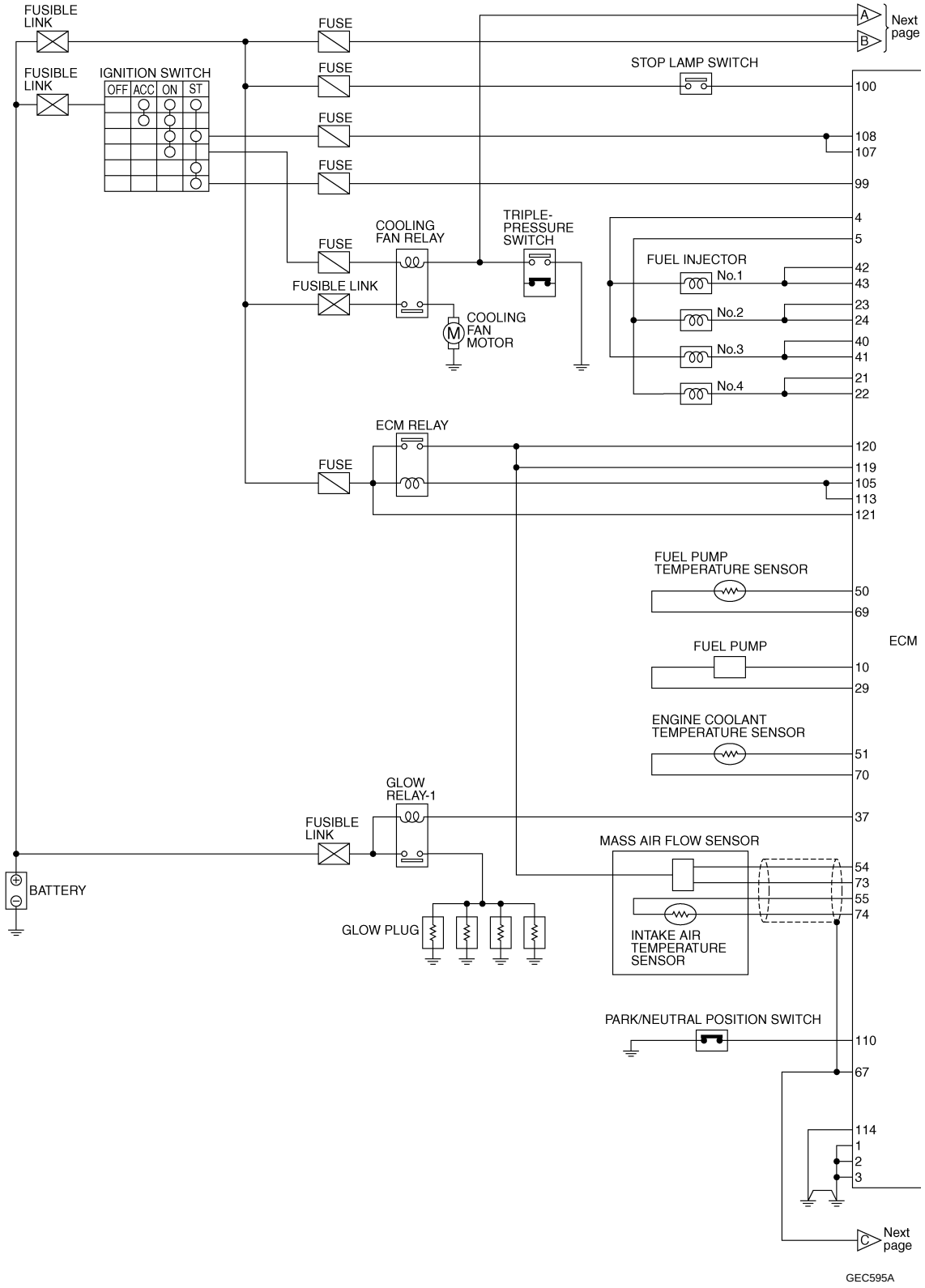

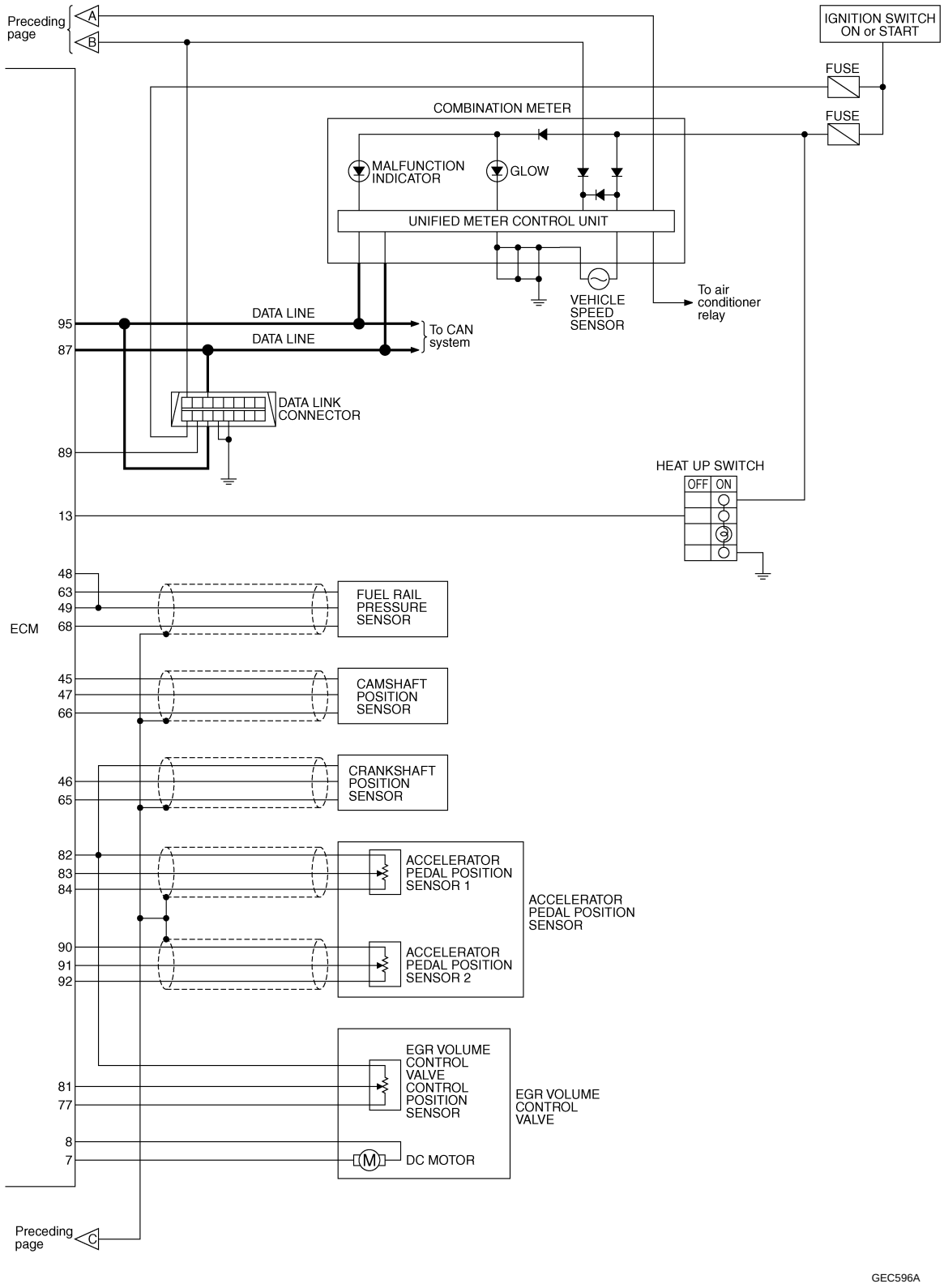
Preceding page
A
B
IGNITION SWITCH ON or START
FUSE
FUSE
COMBINATION METER
MALFUNCTION INDICATOR
GLOW
UNIFIED METER CONTROL UNIT
VEHICLE SPEED SENSOR
To air conditioner relay
95
87
DATA LINE
DATA LINE
To CAN system
DATA LINK CONNECTOR
89
HEAT UP SWITCH
OFF
ON
13
48
63
49
68
ECM
FUEL RAIL PRESSURE SENSOR
45
47
66
CAMSHAFT POSITION SENSOR
46
65
CRANKSHAFT POSITION SENSOR
82
83
84
ACCELERATOR PEDAL POSITION SENSOR 1
ACCELERATOR PEDAL POSITION SENSOR
90
91
92
ACCELERATOR PEDAL POSITION SENSOR 2
EGR VOLUME CONTROL VALVE CONTROL POSITION SENSOR
81
77
EGR VOLUME CONTROL VALVE
8
7
M
DC MOTOR
Preceding page
C
GEC596A

ECM Harness Connector Terminal Layout

INFOID:0000000003759329

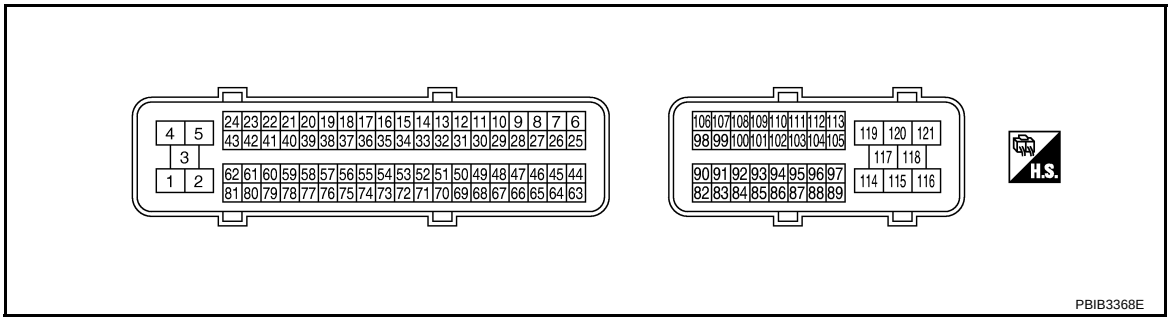

ECM Terminal and Reference Value

INFOID:0000000003759330

PREPARATION

1. ECM (1) is located behind the instrument lower panel.
2. Remove ECM cover.

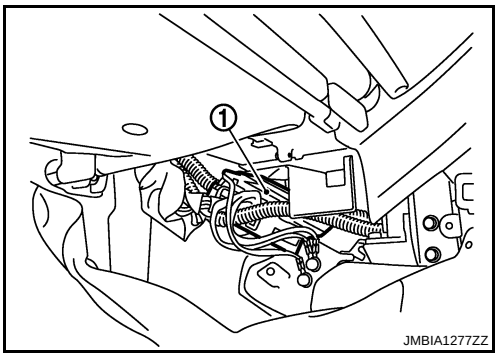

3. When disconnecting ECM harness connector, loosen it with levers as far as they will go as shown in the figure.
4. Connect a break-out box and Y-cable adapter between the ECM and ECM harness connector.
   - Use extreme care not to touch 2 pins at one time.
   - Data is for comparison and may not be exact.

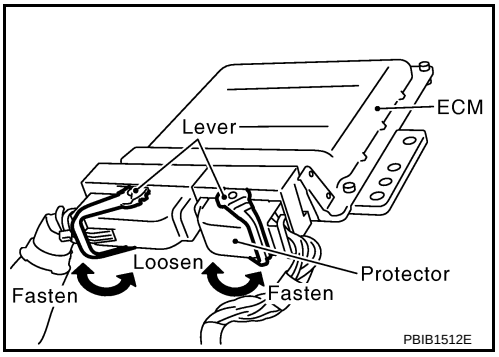

ECM INSPECTION TABLE

Specification data are reference values and are measured between each terminal and ground.
Pulse signal is measured by CONSULT-III.

TERMINAL NO. (Wire color)		Description	Condition	Value (Approx.)
+	–	Signal name		
1 (B) 2 (B) 3 (B)	—	ECM ground	—	—
4 (L)	114 (B)	Fuel injector power supply (For cylinder No. 1 and 3)	**[Engine is running]** • **Warm-up condition** • Idle speed **NOTE:** The pulse cycle changes depending on rpm at idle	Approximately 7.5 V ★ 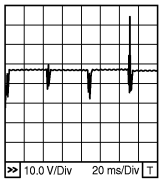 MBIB1295E
5 (P)		Fuel injector power supply (For cylinder No. 2 and 4)	**[Engine is running]** • **Warm-up condition** • Engine speed: 2,000 rpm	Approximately 8.0 V ★ 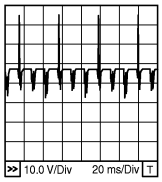 MBIB1296E
7 (OR)	114 (B)	EGR volume control valve (Close)	**[Ignition switch OFF]** • **Warm-up condition** • For a few seconds after turning ignition switch OFF.	1.0 - 2.0 V★ ↑↓ (Periodically changes) BATTERY VOLTAGE (11 - 14 V) 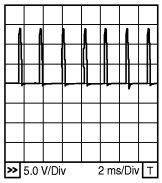 MBIB1783E
8 (Y)	114 (B)	EGR volume control valve (Open)	**[Ignition switch OFF]** • **Warm-up condition** • For a few seconds after turning ignition switch OFF.	1.0 - 2.0 V★ ↑↓ (Periodically changes) BATTERY VOLTAGE (11 - 14 V) 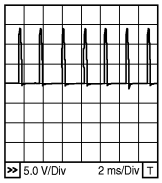 MBIB1783E

TERMINAL NO. (Wire color) +	TERMINAL NO. (Wire color) –	Description Signal name	Condition	Value (Approx.)
10 (G)	114 (B)	Fuel pump	**[Engine is running]** • **Warm-up condition** • Idle speed	Approximately 5.8 V ★ 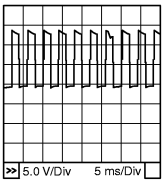 MBIB0885E
			[Engine is running] • **Warm-up condition** • Engine speed: 2,000 rpm	Approximately 5.5 V ★ 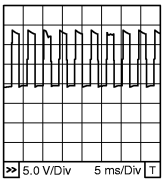 MBIB0886E
13 (BR)	114 (B)	Heat up switch	**[Ignition switch ON]** • Heat up switch: OFF	Approximately 0 V
			[Ignition switch ON] • Heat up switch: ON	BATTERY VOLTAGE (11 - 14 V)
21 (Y) 22 (R)	114 (B)	Fuel injector No. 4 Fuel injector No. 4	**[Engine is running]** • **Warm-up condition** • Idle speed **NOTE:** The pulse cycle changes depending on rpm at idle	Approximately 7.5 V ★ 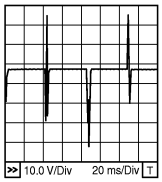 MBIB1297E
23 (W) 24 (OR)		Fuel injector No. 2 Fuel injector No. 2	**[Engine is running]** • **Warm-up condition** • Engine speed: 2,000 rpm	Approximately 8.0 V ★ 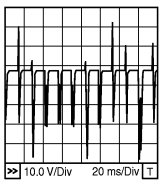 MBIB1298E
29 (B)	114 (B)	Fuel pump	**[Engine is running]** • **Warm-up condition** • Idle speed	Approximately 0.3 V ★ 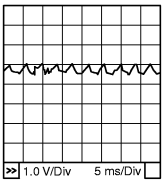 MBIB0887E
			[Engine is running] • **Warm-up condition** • Engine speed: 2,000 rpm	Approximately 0.3 V ★ 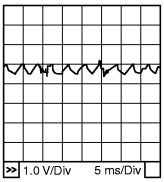 MBIB0888E

TERMINAL NO. (Wire color)		Description	Condition	Value (Approx.)
+	–	Signal name		
37 (L)	114 (B)	Glow relay	Refer to EC-173.	
40 (G)	114 (B)	Fuel injector No. 3	**[Engine is running]** • **Warm-up condition** • Idle speed **NOTE:** The pulse cycle changes depending on rpm at idle	Approximately 7.5 V ★ 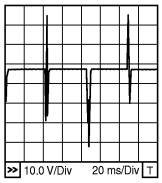 MBIB1297E
41 (BR)		Fuel injector No. 3		
42 (PU)		Fuel injector No. 1	**[Engine is running]** • **Warm-up condition** • Engine speed: 2,000 rpm	Approximately 8.0 V ★ 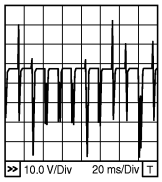 MBIB1298E
43 (SB)		Fuel injector No. 1		
45 (W)	66 (B)	Camshaft position sensor power supply	**[Ignition switch ON]**	Approximately 5 V
46 (G)	65 (Y)	Crankshaft position sensor	**[Engine is running]** • **Warm-up condition** • Idle speed **NOTE:** The pulse cycle changes depending on rpm at idle	Approximately 3.5 V ★ 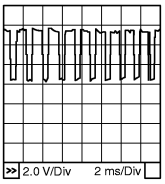 MBIB0879E
			[Engine is running] • **Warm-up condition** • Engine speed: 2,000 rpm	Approximately 3.5 V ★ 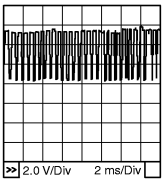 MBIB0880E
47 (R)	66 (B)	Camshaft position sensor	**[Engine is running]** • **Warm-up condition** • Idle speed **NOTE:** The pulse cycle changes depending on rpm at idle	Approximately 4.7 V ★ 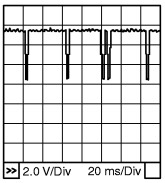 MBIB0877E
			[Engine is running] • **Warm-up condition** • Engine speed: 2,000 rpm	Approximately 4.7 V ★ 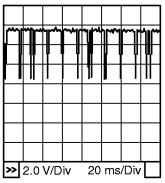 MBIB0878E

TERMINAL NO. (Wire color) +	TERMINAL NO. (Wire color) –	Description Signal name	Condition	Value (Approx.)
48 (W) 49 (W)	68 (B)	Fuel rail pressure sensor	**[Engine is running]** • **Warm-up condition** • Idle speed	1.4 - 1.7 V
			[Engine is running] • **Warm-up condition** • Engine speed: 2,000 rpm	1.7 - 2.0 V
50 (BR)	69 (PU)	Fuel pump temperature sensor	**[Engine is running]** • **Warm-up condition**	Approximately 0 - 4.8 V Output voltage varies with fuel pump temperature
51 (GY)	70 (LG)	Engine coolant temperature sensor	**[Engine is running]** • **Warm-up condition**	Approximately 0 - 4.8 V Output voltage varies with engine coolant temperature
54 (G)	73 (B)	Mass air flow sensor	**[Ignition switch ON]**	Approximately 0.4 V
			[Engine is running] • **Warm-up condition** • Idle speed	1.3 - 1.8 V
			[Engine is running] • **Warm-up condition** • Engine is revving from idle to about 4,000 rpm.	1.3 - 1.8 V to Approximately 4.0 V (Check for liner voltage rise in response to engine being increased to about 4,000 rpm)
55 (W)	74 (R)	Intake air temperature sensor	**[Engine is running]** • **Warm-up condition**	Approximately 0 - 4.8 V Output voltage varies with intake air temperature
63 (R)	68 (B)	Fuel rail pressure sensor power supply	**[Ignition switch ON]**	Approximately 5 V
65 (Y)	—	Crankshaft position sensor ground	—	—
66 (B)	—	Camshaft position sensor ground	—	—
67 (B)	—	Sensor ground (Sensor shield circuit)	—	—
68 (B)	—	Fuel rail pressure sensor ground	—	—
69 (PU)	—	Fuel pump temperature sensor ground	—	—
70 (LG)	—	Engine coolant temperature sensor ground	—	—
73 (B)	—	Mass air flow sensor ground	—	—
74 (R)	—	Intake air temperature sensor ground	—	—
77 (SB)	—	EGR volume control valve control position sensor ground	—	—
81 (P)	77 (SB)	EGR volume control valve control position sensor	**[Ignition switch OFF]** • **Warm-up condition** • For a few seconds after turning ignition switch OFF.	Voltage should fluctuates between 0.5 and 2.5 V, then drop to 0V.
82 (W)	84 (R)	Sensor power supply (Accelerator pedal position sensor 1 / Crankshaft position sensor / EGR volume control valve control position sensor)	**[Ignition switch ON]**	Approximately 5 V

TERMINAL NO. (Wire color) +	TERMINAL NO. (Wire color) –	Description Signal name	Condition	Value (Approx.)
83 (B)	84 (R)	Accelerator pedal position sensor 1	**[Ignition switch ON]** • Engine: Stopped • Accelerator pedal: Fully released	0.5 - 1.0 V
			[Ignition switch ON] • Engine: Stopped • Accelerator pedal: Fully depressed	3.7 - 4.7 V
84 (R)	—	Accelerator pedal position sensor 1 ground	—	—
87 (P)	—	CAN communication line	—	—
89 (LG)	114 (B)	Data link connector	—	—
90 (L)	92 (Y)	Accelerator pedal position sensor 2 power supply	**[Ignition switch ON]**	Approximately 5 V
91 (G)	92 (Y)	Accelerator pedal position sensor 2	**[Ignition switch ON]** • Engine: Stopped • Accelerator pedal: Fully released	0.15 - 0.6 V
			[Ignition switch ON] • Engine: Stopped • Accelerator pedal: Fully depressed	1.85 - 2.4 V
92 (Y)	—	Accelerator pedal position sensor 2 ground	—	—
95 (L)	—	CAN communication line	—	—
99 (R)	114 (B)	Start signal	**[Ignition switch ON]**	Approximately 0 V
			[Ignition switch START]	BATTERY VOLTAGE (11 - 14 V)
100 (GY)	114 (B)	Stop lamp switch	**[Ignition switch OFF]** • Brake pedal: Fully released	Approximately 0 V
			[Ignition switch OFF] • Brake pedal: Slightly depressed	BATTERY VOLTAGE (11 - 14 V)
105 (G)	114 (B)	ECM relay (self shut-off)	**[Ignition switch ON]** **[Ignition switch OFF]** • For a few seconds after turning ignition switch OFF	0 - 1.0 V
			[Ignition switch OFF] • More than a few seconds after turning ignition switch OFF	BATTERY VOLTAGE (11 - 14 V)
107 (L) 108 (L)	114 (B)	Ignition switch	**[Ignition switch ON]**	BATTERY VOLTAGE (11 - 14 V)
110 (BR)	114 (B)	Park/neutral position switch	**[Ignition switch ON]** • Shift lever: Neutral	Approximately 0 V
			[Ignition switch ON] • Except the above position	BATTERY VOLTAGE (11 - 14 V)
113 (G)	114 (B)	ECM relay (self shut-off)	**[Ignition switch ON]** **[Ignition switch OFF]** • For a few seconds after turning ignition switch OFF	0 - 1.0 V
			[Ignition switch OFF] • More than a few seconds after turning ignition switch OFF	BATTERY VOLTAGE (11 - 14 V)

TERMINAL NO. (Wire color)		Description	Condition	Value (Approx.)
+	–	Signal name		
114 (B)	—	ECM ground	—	—
119 (R) 120 (OR)	114 (B)	Power supply for ECM	**[Ignition switch ON]**	BATTERY VOLTAGE (11 - 14 V)
121 (L)	114 (B)	Power supply for ECM (Back-up)	**[Ignition switch OFF]**	BATTERY VOLTAGE (11 - 14 V)

★: Average voltage for pulse signal (Actual pulse signal can be confirmed by oscilloscope.)

CONSULT-III Function (ENGINE)

INFOID:0000000003759331

FUNCTION

Diagnostic test mode	Function
Work support	This mode enables a technician to adjust some devices faster and more accurately by following the indications on the CONSULT-III unit.
Self-Diagnostic Results	Self-diagnostic results such as 1st/2nd trip DTC, DTC and freeze frame data can be read and erased quickly.*
Data Monitor	Input/Output data in the ECM can be read.
Active Test	Diagnostic Test Mode in which CONSULT-III drives some actuators apart from the ECMs and also shifts some parameters in a specified range.
Function Test	This mode is used to inform customers when their vehicle condition requires periodic maintenance.
ECM Part Number	ECM part number can be read.

*: The following emission-related diagnostic information is cleared when the ECM memory is erased.

- Diagnostic trouble codes
- 1st/2nd trip diagnostic trouble codes
- Freeze frame data

ENGINE CONTROL COMPONENT PARTS/CONTROL SYSTEMS APPLICATION

Item			DIAGNOSTIC TEST MODE			
			SELF-DIAG RESULTS		DATA MONITOR	ACTIVE TEST
			DTC*	FREEZE FRAME DATA		
ENGINE CONTROL COMPONENT PARTS	INPUT	Crankshaft position sensor	×	×	×	
		Camshaft position sensor	×			
		Engine coolant temperature sensor	×	×	×	×
		Vehicle speed sensor	×	×	×	
		Fuel pump temperature sensor	×		×	×
		Accelerator pedal position sensor 1	×		×	
		Accelerator pedal position sensor 2	×		×	
		Fuel rail pressure sensor	×		×	
		Mass air flow sensor	×	×	×	
		Intake air temperature sensor	×	×		
		Battery voltage	×		×	
		Park/neutral position (PNP) switch	×		×	
		EGR volume control valve control position sensor	×		×	
		Stop lamp switch	×		×	
		Heat up switch			×	
		Ignition switch (Start signal)			×	
		Air conditioner switch signal			×	
		Barometric pressure sensor (built-into ECM)	×		×	
	OUTPUT	Fuel pump	×		×	×
		Fuel injector	×		×	×
		Glow relay	×		×	×
		Cooling fan relay	×		×	×
		EGR volume control valve	×		×	×

X: Applicable

*: This item includes 1st/2nd trip DTCs.

WORK SUPPORT MODE

Work Item

WORK ITEM	DESCRIPTION	USAGE
ENTER INJCTR CALIB DATA	• Injector adjustment value is written onto ECM memory.	When performing Injector Adjustment Value Registration.
EGR/V LEARN CLR	• EGR volume control valve learning value stored in ECM is cleared.	EGR volume control valve closed position learning value should be cleared under the following cases. • EGR volume control valve is removed. • EGR volume control valve is replaced.
INJ ADJ VAL CLR	• Injector adjustment value stored in ECM is initialized.	Before changing injector adjustment value stored in ECM, it is recommended to perform this work item.

SELF-DIAGNOSTIC MODE

Self Diagnostic Item

Regarding items of DTC and 1st/2nd trip DTC, refer to EC-32, "Emission-Related Diagnostic Information".

Freeze Frame Data

Freeze frame data item	Description
DIAG TROUBLE CODE [PXXXX]	• The engine control component part/control system has a trouble code, it is displayed as “PXXXX”. (Refer to EC-32, "Emission-Related Diagnostic Information".)
CAL/LD VALUE [%]	• The calculated load value at the moment a malfunction is detected is displayed.
COOLANT TEMP [°C] or [°F]	• The engine coolant temperature at the moment a malfunction is detected is displayed.
ENGINE SPEED [rpm]	• The engine speed at the moment a malfunction is detected is displayed.
VEHICL SPEED [km/h] or [mph]	• The vehicle speed at the moment a malfunction is detected is displayed.
INT/A TEMP SE [°C] or [°F]	• The intake air temperature at the moment a malfunction is detected is displayed.
FUEL/R PRESS [kPa]	• The fuel rail pressure at the moment a malfunction is detected is displayed.
MASS AIRFLOW [g/s]	• The mass air flow at the moment a malfunction is detected is displayed.

DATA MONITOR MODE

Monitored item	Unit	Description	Remarks
CKPS·RPM (TDC)	[rpm]	• The engine speed computed from the crankshaft position sensor signal is displayed.	
COOLAN TEMP/S	[°C] or [°F]	• The engine coolant temperature (determined by the signal voltage of the engine coolant temperature sensor) is displayed.	When the engine coolant temperature circuit is open or short, ECM enters fail-safe mode. The engine coolant temperature determined by the ECM is displayed.
VHCL SPEED SE	[km/h] or [mph]	• The vehicle speed computed form the vehicle speed sensor signal is displayed.	
FUEL TEMP SEN	[°C] or [°F]	• The fuel temperature (determined by the signal voltage of the fuel pump temperature sensor) is displayed.	
ACCEL POS SEN	[V]	• The accelerator pedal position sensor 1 signal voltage is displayed.	
ACCEL SEN 2	[V]	• The accelerator pedal position sensor 2 signal voltage is displayed.	
ACT CR PRESS	[MPa]	• The Fuel rail pressure (determined by the signal voltage of the fuel rail pressure sensor) is displayed.	
BATTERY VOLT	[V]	• The power supply voltage of ECM is displayed.	
P/N POSI SW	[ON/OFF]	• Indicates [ON/OFF] condition from the park/neutral position switch signal.	
START SIGNAL	[ON/OFF]	• indicates [ON/OFF] condition from the starter signal.	
AIR COND SIG	[ON/OFF]	• Indicates [ON/OFF] condition of the air conditioner switch as determined by the air conditioner signal.	
BRAKE SW	[ON/OFF]	• indicates [ON/OFF] condition from the stop lamp switch signal.	
IGN SW	[ON/OFF]	• Indicates [ON/OFF] condition from ignition switch signal.	
WARM UP SW	[ON/OFF]	• Indicates [ON/OFF] condition from heat up switch signal.	

Monitored item	Unit	Description	Remarks
MAS AIR/FL SE	[V]	• The signal voltage of the mass air flow sensor is displayed.	
MAIN INJ WID	[msec]	• Indicates the actual main fuel injection pulse width compensated by ECM according to the input signals.	
PUMP CURRENT	[mA]	• Indicates the fuel pump power supply current from the ECM.	
GLOW RLY	[ON/OFF]	• The glow relay control condition (determined by ECM according to the input signal) is displayed.	
COOLING FAN*	[LOW/HI/OFF]	• Indicates the control condition of the cooling fans (determined by ECM according to the input signal). LOW: Operates at low speed. HI: Operates at high speed. OFF: Stopped	
INT/A VOLUME	[mg/]	• The intake air volume computed from the mass air flow sensor signal is displayed.	
BARO SEN	[kPa]	• The barometric pressure (determined by the signal voltage from the absolute pressure sensor built into the ECM) is displayed.	
CYL COUNT	[1/2/3/4]	• The cylinder being injected is displayed. 1: Cylinder No.1 is injected. 2: Cylinder No.2 is injected. 3: Cylinder No.3 is injected. 4: Cylinder No.4 is injected.	
TRVL AFTER MIL	[km] or [mile]	• Distance traveled while MI is activated.	
EGR/V ANGLE	[°]	• The opening angle of EGR volume control value is displayed. • The opening becomes larger as the value increases.	
EGR V/POS SEN	[mV]	• The EGR volume control valve control position sensor signal voltage is displayed.	

NOTE:

Any monitored item that does not match the vehicle being diagnosed is deleted from the display automatically.

*: The cooling fan rotation has two stages (OFF and ON) although the display of CONSULT-III has three stages (OFF,LOW and HI).

ACTIVE TEST MODE

TEST ITEM	CONDITION	JUDGMENT	CHECK ITEM (REMEDY)
POWER BALANCE	• Engine: After warming up, idle the engine. • A/C switch: OFF • Shift lever: Neutral position • Cut off each injector signal one at a time using CONSULT-III.	Engine runs rough or dies.	• Harness and connectors • Compression • Fuel injector
ENG COOLANT TEMP	• Engine: Return to the original trouble condition • Change the engine coolant temperature using CONSULT-III.	If trouble symptom disappears, see CHECK ITEM.	• Harness and connectors • Engine coolant temperature sensor • Fuel injector
GLOW RLY	• Ignition switch: ON (Engine stopped) • Turn the glow relay ON and OFF using CONSULT-III and listen to operating sound.	Glow relay makes the operating sound.	• Harness and connectors • Glow relay

TEST ITEM	CONDITION	JUDGMENT	CHECK ITEM (REMEDY)
FUEL/T TEMP SEN	• Engine: Return to the original trouble condition • Change the fuel tank temperature using CONSULT-III.	If trouble symptom disappears, see CHECK ITEM.	• Harness and connectors • Fuel tank temperature sensor • Fuel injector
PRES REGULATOR	• Ignition switch: ON • Change fuel rail pressure using CONSULT-III.	Fuel leaks.	• Fuel line • Fuel pressure relief valve
PUMP LEANT CLEAR	• This mode is used for performing Fuel Pump Learning Value Clearing. Refer to EC-23, "Fuel Pump Learning Value Clearing".		
TRG EGR/V ANGLE	• Ignition switch: ON • Change EGR volume control valve opening angle (within the range of 0 - 70°) using CONSULT-III.	EGR volume control valve makes an operating sound.	• Harness and connectors • EGR volume control valve

Generic Scan Tool (GST) Function

INFOID:0000000003759332

DESCRIPTION

Generic Scan Tool (OBD II scan tool) complying with ISO 15031-4 has 7 different functions explained below.
ISO9141 is used as the protocol.
The name “GST” or “Generic Scan Tool” is used in this service manual.

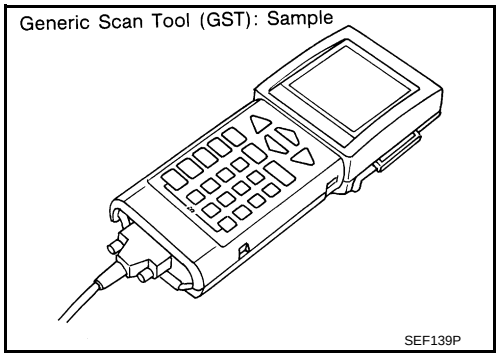

FUNCTION

Diagnostic test mode		Function
Service $01	READINESS TESTS	This diagnostic service gains access to current emission-related data values, including analog inputs and outputs, digital inputs and outputs, and system status information.
Service $02	(FREEZE DATA)	This diagnostic service gains access to emission-related data value which were stored by ECM during the freeze frame. For details, refer to EC-32, "Emission-Related Diagnostic Information".
Service $03	DTCs	This diagnostic service gains access to emission-related power train trouble codes which were stored by ECM.
Service $04	CLEAR DIAG INFO	This diagnostic service can clear all emission-related diagnostic information. This includes: • Clear number of diagnostic trouble codes (Service $01) • Clear diagnostic trouble codes (Service $03) • Clear trouble code for freeze frame data (Service $01) • Clear freeze frame data (Service $02) • Reset status of system monitoring test (Service $01) • Clear on board monitoring test results (Service $07)
Service $06	(ON BOARD TESTS)	This diagnostic service is not applicable on this vehicle.
Service $07	(ON BOARD TESTS)	This diagnostic service enables the off board test drive to obtain test results for emission-related powertrain components/systems that are continuously monitored during normal driving conditions.
Service $09	(CALIBRATION ID)	This diagnostic service enables the off-board test device to request specific vehicle information such as Vehicle Identification Number (VIN) and Calibration IDs.

INSPECTION PROCEDURE

1. Turn ignition switch OFF.

2. Connect “GST” to data link connector (1), which is located under drivers side dash panel.
3. Turn ignition switch ON.

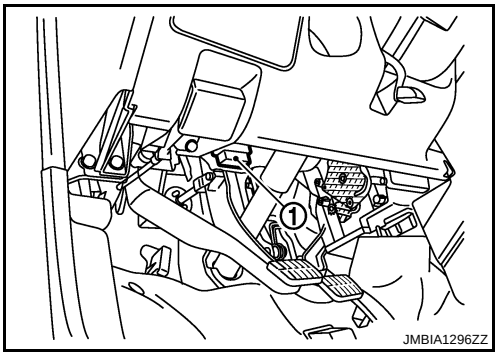

4. Enter the program according to instruction on the screen or in the operation manual.

(*: Regarding GST screens in this section, sample screens are shown.)

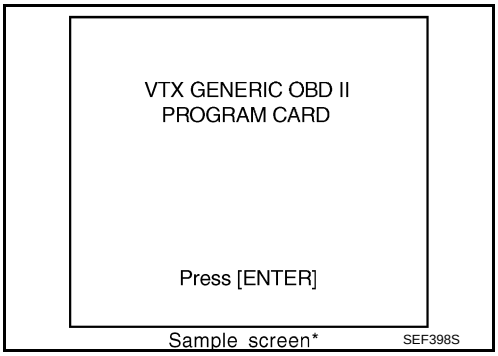

5. Perform each diagnostic mode according to each service procedure.

For further information, see the GST Operation Manual of the tool maker.

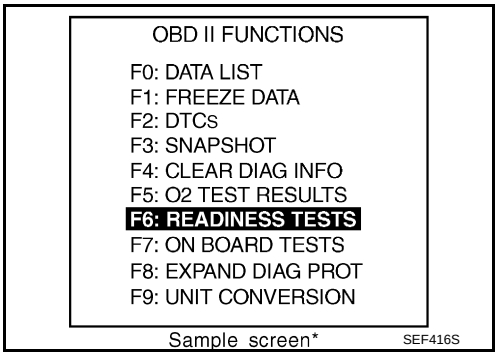

CONSULT-III Reference Value in Data Monitor Mode

INFOID:0000000003759333

Remarks:
l Specification data are reference values.
l Specification data are output/input values which are detected or supplied by the ECM at the connector.
* Specification data may not be directly related to their components signals/values/operations.

MONITOR ITEM	CONDITION		SPECIFICATION
CKPS-RPM (TDC)	• Run engine and compare CONSULT-III value with the tachometer indication.		Almost the same speed as the tachometer indication
COOLAN TEMP/S	• Engine: After warming up		More than 70°C (158°F)
VHCL SPEED SE	• Turn drive wheels and compare CONSULT-III value with the speedometer indication		Almost the same speed as the speedometer indication
FUEL TEMP SEN	• Engine: After warming up		More than 40°C (104°F)
ACCEL POS SEN*1	• Ignition switch: ON (Engine stopped)	Accelerator pedal: Fully released	0.5 - 1.0 V
		Accelerator pedal: Fully depressed	4.0 - 4.8 V
ACCEL SEN 2*1	• Ignition switch: ON (Engine stopped)	Accelerator pedal: Fully released	0.3 - 1.2 V
		Accelerator pedal: Fully depressed	3.7 - 4.8 V
ACT CR PRESS	• Engine: After warming up • Air conditioner switch: OFF • Shift lever: Neutral • No load	Idle	25 - 35 MPa
		2,000 rpm	50 - 60 MPa

MONITOR ITEM	CONDITION		SPECIFICATION
BATTERY VOLT	• Ignition switch: ON (Engine stopped)		11 - 14 V
P/N POSI SW	• Ignition switch: ON	Shift lever: Neutral	ON
		Except above	OFF
START SIGNAL	• Ignition switch: ON → START → ON		OFF → ON → OFF
AIR COND SIG	• Engine: After warming up, idle the engine	Air conditioner switch: OFF	OFF
		Air conditioner switch: ON (Compressor operates.)	ON
BRAKE SW	• Ignition switch: ON	Brake pedal: Fully released	OFF
		Brake pedal: Slightly depressed	ON
IGN SW	• Ignition switch: ON → OFF		ON → OFF
WARM UP SW	• Ignition switch: ON	Heat up switch: OFF	OFF
		Heat up switch: ON	ON
MAS AIR/FL SE*1	• Engine: After warming up • Air conditioner switch: OFF • Shift lever: Neutral • No load	Ignition switch: ON (Engine stopped)	Approximately 0.4 V
		Idle	1.3 - 1.8 V
		Engine is revving from idle to about 4,000 rpm.	1.3 - 1.8 V to Approximately 4.0 V (Check for liner voltage rise in response to engine being increased to about 4,000 rpm)
MAIN INJ WID	• Engine: After warming up • Shift lever: Neutral • Idle speed	No load	0.50 - 0.70 msec
		Blower fan switch: ON	0.50 - 0.80 msec
PUMP CURRENT	• Engine: After warming up • Air conditioner switch: OFF • Shift lever: Neutral • No load	Idle	1,600 - 2,000 mA
		2,000 rpm	1,500 - 1,900 mA
GLOW RLY	Refer to EC-273.		
COOLING FAN*2	• When cooling fan is stopped.		OFF
	• When cooling fans operate at low speed.		LOW
	• When cooling fans operate at high speed.		HI
INT/A VOLUME	• Engine: After warming up, idle the engine		150 - 450 mg/
BARO SEN	• Ignition switch: ON		Altitude Approx. 0m: Approx. 100.62 kPa (1.0062 bar, 1.026 kg/cm^2, 14.59 psi) Approx. 1,000 m: Approx. 88.95 kPa (0.8895 bar, 0.907 kg/cm^2, 12.90 psi) Approx. 1,500 m: Approx. 83.16 kPa (0.8316 bar, 0.848 kg/cm^2, 12.06 psi) Approx. 2,000 m: Approx. 78.36 kPa (0.7836 bar, 0.799 kg/cm^2, 11.36 psi)
CYL COUNT	• Engine is running		1 → 3 → 4 → 2
TRVL AFTER MIL	• Ignition switch: ON	Vehicle has traveled after MI has turned ON.	0 - 65,535 km (0 - 40,723 mile)
EGR/V ANGLE	• Ignition switch: ON (Engine stopped)		Approx. 0°
EGR V/POS SEN	• Ignition switch: ON (Engine stopped)		1,050 - 1,350 mV

NOTE:

Any monitored item that does not match the vehicle being diagnosed is deleted from the display automatically.

*1: This signal is converted by ECM internally. Thus, this differs from ECM terminals voltage.

*2: The cooling fan rotation has two stages (OFF and ON) although the display of CONSULT-III has three stages (OFF,LOW and HI).

TROUBLE DIAGNOSIS FOR INTERMITTENT INCIDENT

Description

INFOID:0000000003759334

Intermittent incidents may occur. In many cases, the incident resolves itself (the part or circuit function returns to normal without intervention). It is important to realize that the symptoms described in the customer's complaint often do not recur on (1st/2nd trip) DTC visits. Realize also that the most frequent cause of intermittent incidents occurrences is poor electrical connections. Because of this, the conditions under which the incident occurred may not be clear. Therefore, circuit checks made as part of the standard diagnostic procedure may not indicate the specific malfunctioning area.

COMMON INTERMITTENT INCIDENTS REPORT SITUATIONS

STEP in Work Flow	Situation
II	The CONSULT-III is used. The SELF-DIAG RESULTS screen shows time data other than “0”.
III	The symptom described by the customer does not recur.
IV	(1st/2nd trip) DTC does not appear during the DTC Confirmation Procedure.
VI	The Diagnostic Procedure for XXXX does not indicate the malfunctioning area.

Diagnosis Procedure

INFOID:0000000003759335

1. INSPECTION START

Erase (1st/2nd trip) DTCs. Refer to EC-32, "Emission-Related Diagnostic Information".

>> GO TO 2.

2. CHECK GROUND TERMINALS

Check ground terminals for corroding or loose connection.
Refer to EC-81, "Ground Inspection".

OK or NG

OK >> GO TO 3.
NG >> Repair or replace.

3. SEARCH FOR ELECTRICAL INCIDENT

Perform “HOW TO PERFORM EFFICIENT DIAGNOSIS FOR AN ELECTRICAL INCIDENT” in GI section, “INCIDENT SIMULATION TESTS”.

OK or NG

OK >> **INSPECTION END**
NG >> Repair or replace.

POWER SUPPLY AND GROUND CIRCUIT

Wiring Diagram

INFOID:0000000003759336

LHD MODELS

EC-MAIN-01

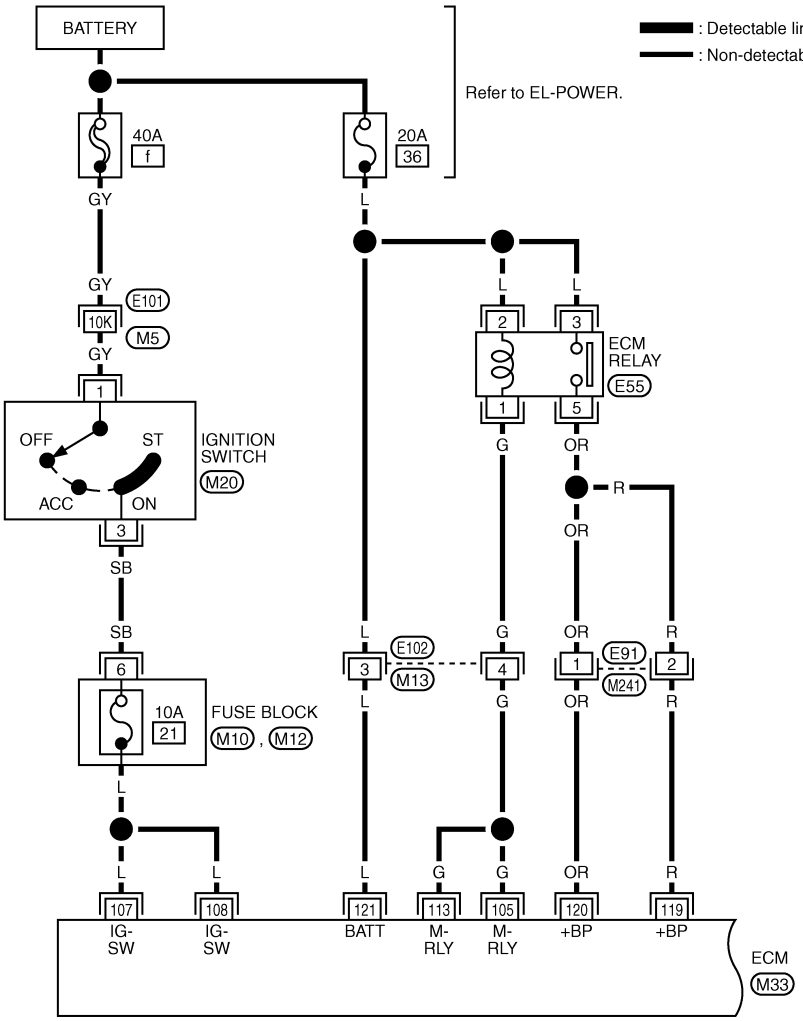

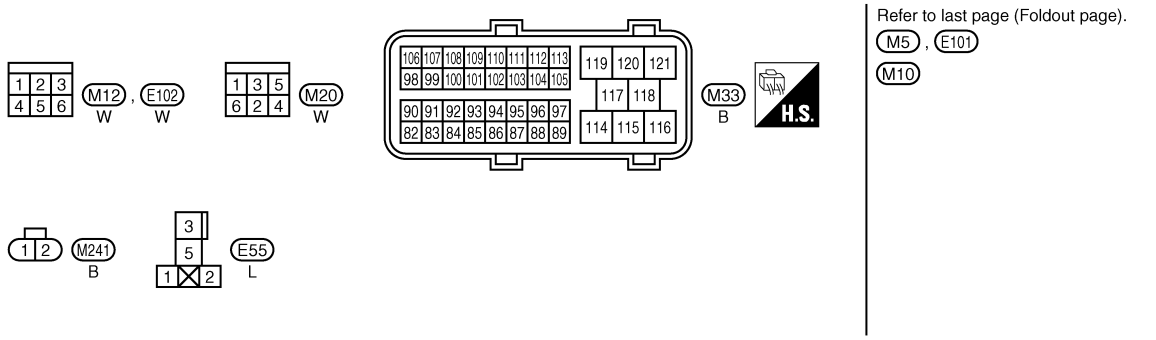

GEC597A

Specification data are reference values and are measured between each terminal and ground.

TERMINAL NO. (Wire color)		Description	Condition	Value (Approx.)
+	–	Signal name		
105 (G)	114 (B)	ECM relay (self shut-off)	**[Ignition switch ON]** **[Ignition switch OFF]** • For a few seconds after turning ignition switch OFF	0 - 1.0 V
			[Ignition switch OFF] • More than a few seconds after turning ignition switch OFF	BATTERY VOLTAGE (11 - 14 V)
107 (L) 108 (L)	114 (B)	Ignition switch	**[Ignition switch ON]**	BATTERY VOLTAGE (11 - 14 V)
113 (G)	114 (B)	ECM relay (self shut-off)	**[Ignition switch ON]** **[Ignition switch OFF]** • For a few seconds after turning ignition switch OFF	0 - 1.0 V
			[Ignition switch OFF] • More than a few seconds after turning ignition switch OFF	BATTERY VOLTAGE (11 - 14 V)
119 (R) 120 (OR)	114 (B)	Power supply for ECM	**[Ignition switch ON]**	BATTERY VOLTAGE (11 - 14 V)
121 (L)	114 (B)	Power supply for ECM (Back-up)	**[Ignition switch OFF]**	BATTERY VOLTAGE (11 - 14 V)

EC-MAIN-02

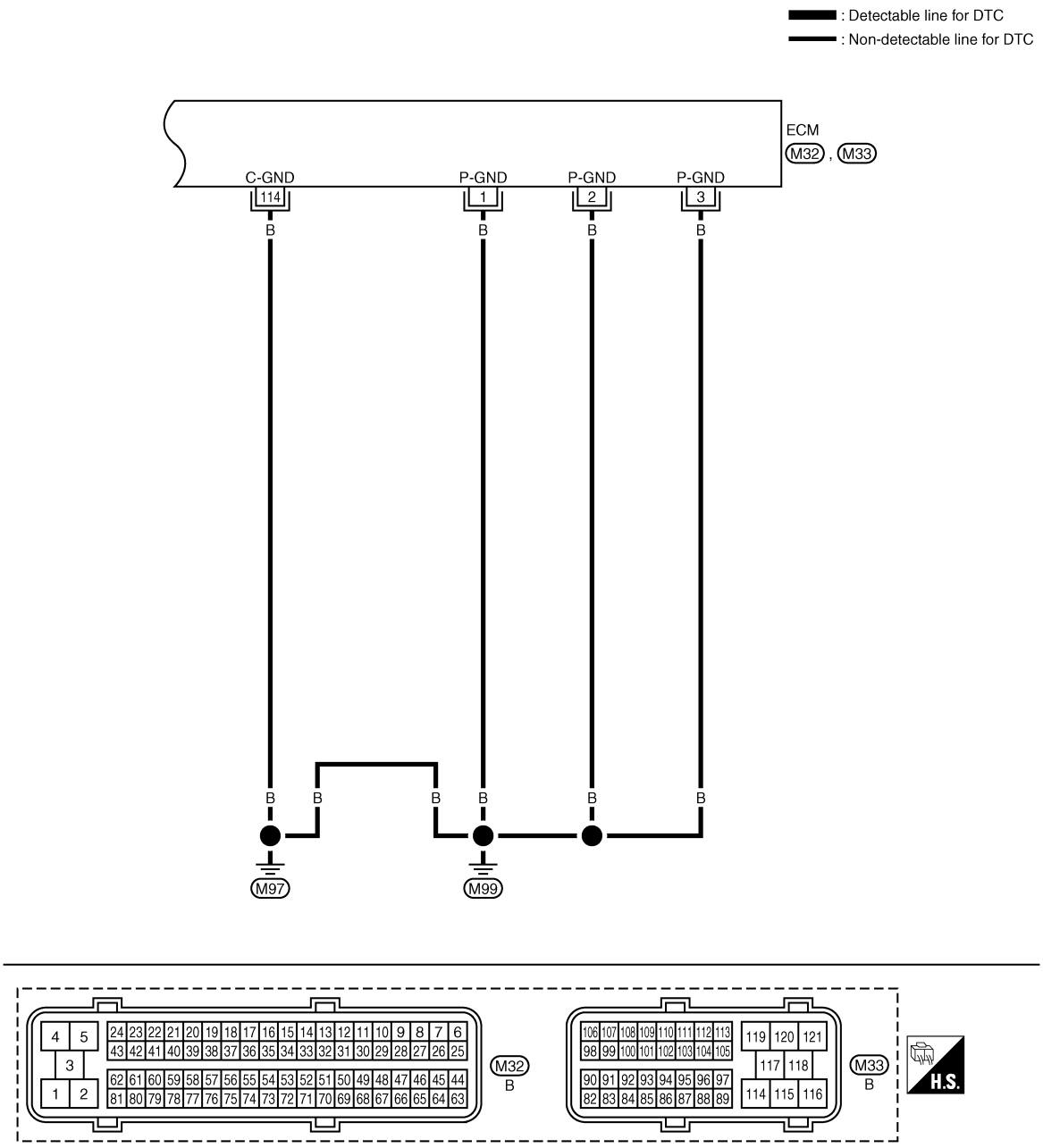

Specification data are reference values and are measured between each terminal and ground.

TERMINAL NO. (Wire color)		Description	Condition	Value (Approx.)
+	–	Signal name		
1 (B) 2 (B) 3 (B)	—	ECM ground	—	—
114 (B)	—	ECM ground	—	—

RHD MODELS

EC-MAIN-03

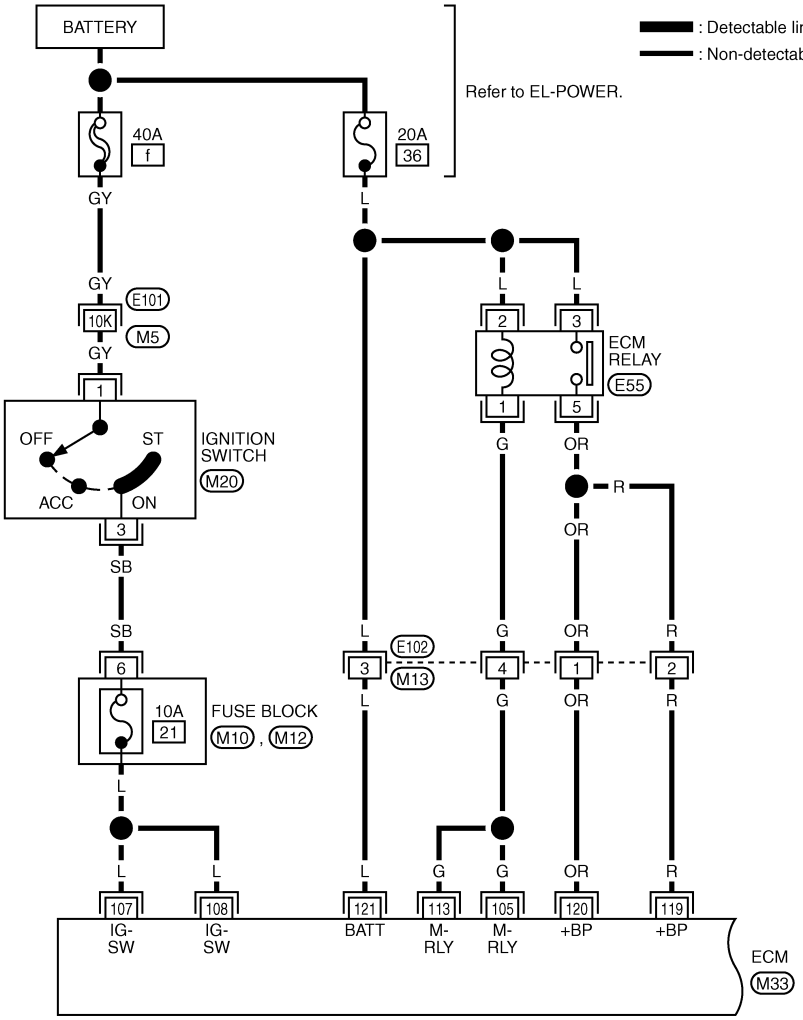

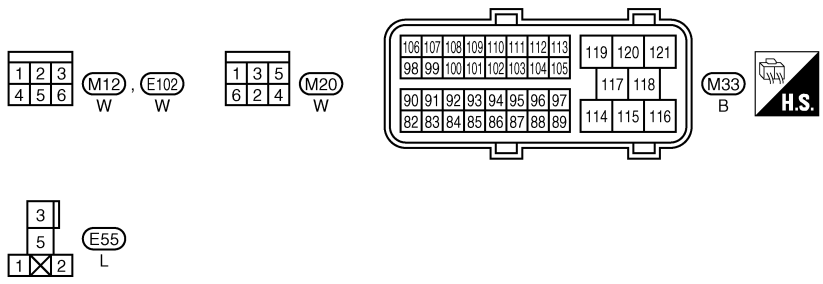

Refer to last page (Foldout page).
M5 , E101
M10

GEC599A

Specification data are reference values and are measured between each terminal and ground.

TERMINAL NO. (Wire color)		Description	Condition	Value (Approx.)
+	–	Signal name		
105 (G)	114 (B)	ECM relay (self shut-off)	**[Ignition switch ON]** **[Ignition switch OFF]** • For a few seconds after turning ignition switch OFF	0 - 1.0 V
			[Ignition switch OFF] • More than a few seconds after turning ignition switch OFF	BATTERY VOLTAGE (11 - 14 V)
107 (L) 108 (L)	114 (B)	Ignition switch	**[Ignition switch ON]**	BATTERY VOLTAGE (11 - 14 V)
113 (G)	114 (B)	ECM relay (self shut-off)	**[Ignition switch ON]** **[Ignition switch OFF]** • For a few seconds after turning ignition switch OFF	0 - 1.0 V
			[Ignition switch OFF] • More than a few seconds after turning ignition switch OFF	BATTERY VOLTAGE (11 - 14 V)
119 (R) 120 (OR)	114 (B)	Power supply for ECM	**[Ignition switch ON]**	BATTERY VOLTAGE (11 - 14 V)
121 (L)	114 (B)	Power supply for ECM (Back-up)	**[Ignition switch OFF]**	BATTERY VOLTAGE (11 - 14 V)

EC-MAIN-04

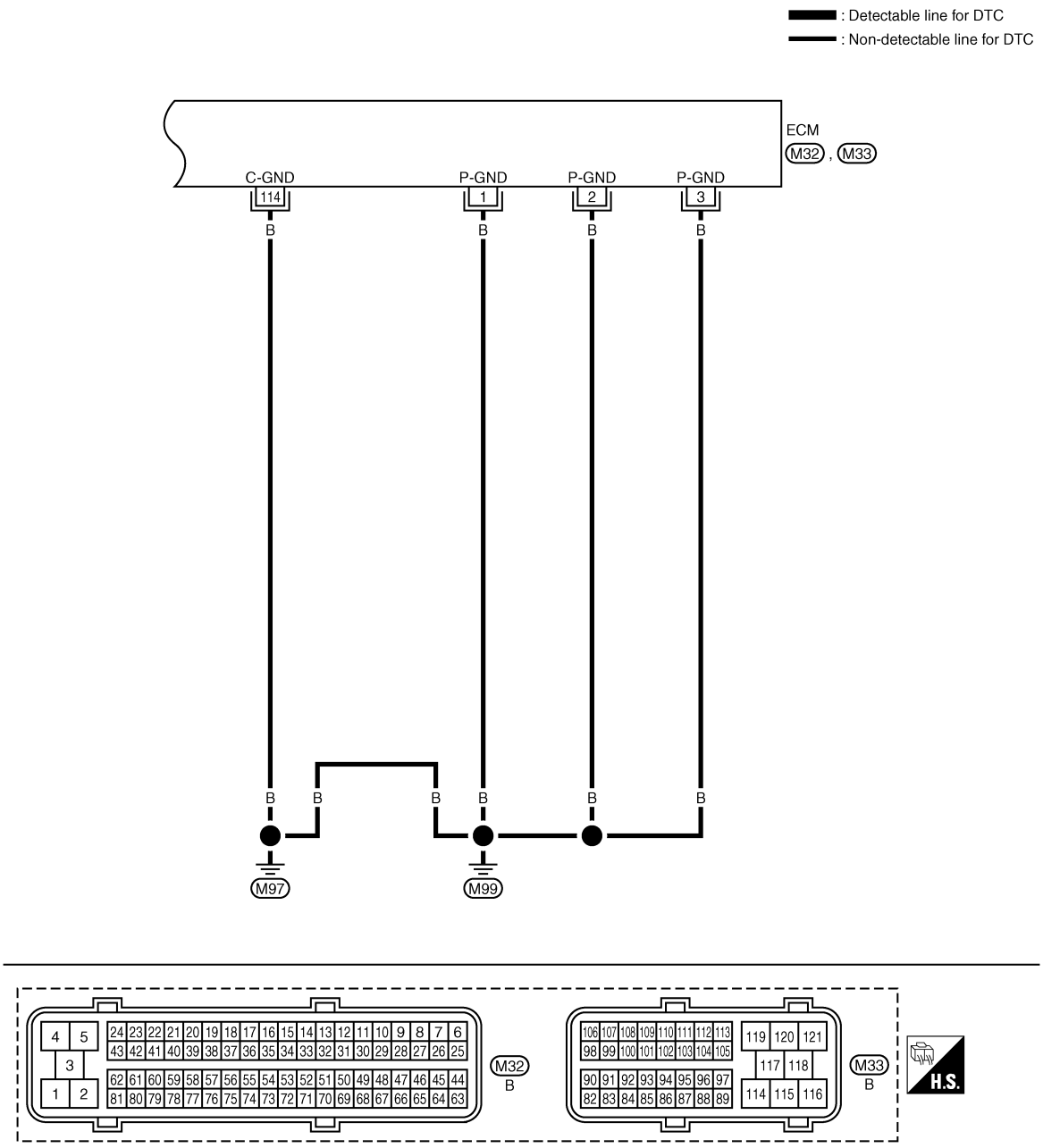

Specification data are reference values and are measured between each terminal and ground.

TERMINAL NO. (Wire color)		Description	Condition	Value (Approx.)
+	–	Signal name		
1 (B) 2 (B) 3 (B)	—	ECM ground	—	—
114 (B)	—	ECM ground	—	—

Diagnosis Procedure

INFOID:0000000003759337

1. CHECK GROUND CONNECTIONS

1. Turn ignition switch OFF.
2. Loosen and retighten ground screws on the body.
   Refer to EC-82, "Ground Inspection".

- Body ground M97 (1)
- Body ground M99 (2)
- ECM (3)

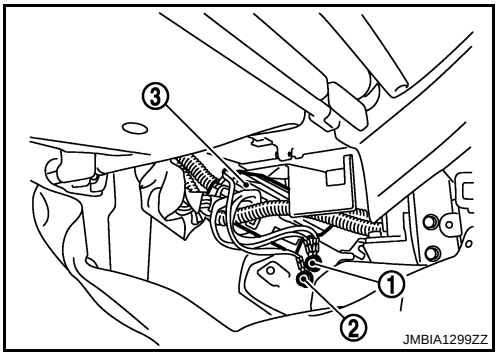

OK or NG

OK >> GO TO 2.
NG >> Repair or replace ground connections.

2. CHECK ECM GROUND CIRCUIT FOR OPEN AND SHORT

1. Disconnect ECM harness connector.
2. Check the continuity between ECM harness connector and ground.

ECM		Ground	Continuity
Connector	Terminal		
M32	1	Ground	Existed
	2		
	3		
M33	114		

3. Also check harness for short to power.

OK or NG

OK >> GO TO 3.
NG >> Repair open or short to power in harness or connectors.

3. CHECK ECM POWER SUPPLY CIRCUIT-I

1. Reconnect ECM harness connector.
2. Turn ignition switch ON.
3. Check voltage between ECM connector terminal as follows.

ECM				Voltage
+		–		
Connector	Terminal	Connector	Terminal	
M33	107	M32	1	Battery voltage
			2	
			3	
		M33	114	
	108	M32	1	
			2	
			3	
		M33	114	

OK or NG

OK >> GO TO 5.
NG >> GO TO 4.

4. DETECT MALFUNCTIONING PART

Check the following.
- 10A fuse (No.21)
- 40A fusible link (letter f)
- Harness connectors E101, M5
- Fuse block harness connector M12
- Ignition switch
- Ignition switch harness connector M20
- Harness for open or short between ECM and fusible link

>> Repair open circuit or short to ground or short to power in harness or connectors.

5. CHECK ECM POWER SUPPLY CIRCUIT-II

1. Turn ignition switch OFF.
2. Check the voltage between ECM connector terminal as follows.

ECM				Voltage
+		–		
Connector	Terminal	Connector	Terminal	
M33	121	M32	1	Battery voltage
			2	
			3	
		M33	114	

OK or NG

OK >> GO TO 7.
NG >> GO TO 6.

6. DETECT MALFUNCTIONING PART

Check the following.
- 20A fuse (No.36)
- Harness connectors E102, M13
- Harness for open or short between Battery and ECM

>> Repair open circuit or short to ground or short to power in harness or connectors.

7. CHECK ECM POWER SUPPLY CIRCUIT-III

1. Turn ignition switch OFF and wait at least 10 seconds.

2. Turn ignition switch ON and then turn OFF.
3. Check the voltage between ECM harness connector.

ECM				Voltage
+		–		
Connector	Terminal	Connector	Terminal	
M33	119	M32	1	After turning ignition switch OFF, battery voltage will exist for a few seconds, then drop approximately 0 V.
			2	
			3	
		M33	114	
	120	M32	1	
			2	
			3	
		M33	114	

OK or NG

OK >> GO TO 16.
NG >> GO TO 8.

8. CHECK ECM POWER SUPPLY CIRCUIT-IV

Check the voltage between ECM relay harness connector and ground.

ECM relay		Ground	Voltage
Connector	Terminal		
E55	2	Ground	Battery voltage
	3		

OK or NG

OK >> GO TO 10.
NG >> GO TO 9.

9. DETECT MALFUNCTIONING PART

Check the following.
- 20A fuse (No.36)
- Harness for open or short between Battery and ECM relay

>> Repair open circuit or short to ground or short to power in harness or connectors.

10. CHECK ECM POWER SUPPLY CIRCUIT-V

Check the voltage between ECM harness connector.

ECM				Voltage
+		–		
Connector	Terminal	Connector	Terminal	
M33	105	M32	1	Battery voltage
			2	
			3	
		M33	114	
	113	M32	1	
			2	
			3	
		M33	114	

OK or NG

OK >> GO TO 13.
NG >> GO TO 11.

11. CHECK ECM POWER SUPPLY CIRCUIT-VI

1. Disconnect ECM harness connector.
2. Disconnect ECM relay.
3. Check the continuity between ECM harness connector and ECM relay harness connector.

ECM		ECM relay		Continuity
Connector	Terminal	Connector	Terminal	
M33	105	E55	1	Existed
	113			

4. Also check harness for short to ground and short to power.

OK or NG

OK >> GO TO 13.
NG >> GO TO 12.

12. DETECT MALFUNCTIONING PART

Check the following.
- Harness connectors E102, M13
- Harness for open or short between ECM and ECM relay

>> Repair open circuit or short to ground or short to power in harness or connectors.

13. CHECK ECM POWER SUPPLY CIRCUIT-VII

1. Disconnect ECM harness connector.
2. Disconnect ECM relay harness connector.
3. Check the continuity between ECM harness connector and ECM relay harness connector.

ECM		ECM relay		Continuity
Connector	Terminal	Connector	Terminal	
M33	119	E55	5	Existed
	120			

4. Also check harness for short to ground and short to power.

OK or NG

OK >> GO TO 15.
NG >> GO TO 14.

14. DETECT MALFUNCTIONING PART

Check the following.
- Harness connectors E91, M241 (LHD models)
- Harness connectors E102, M13 (RHD models)
- Harness for open or short between ECM and ECM relay

OK >> Repair open circuit or short to ground or short to power in harness or connectors.

15. CHECK ECM RELAY

Refer to EC-82

OK >> GO TO 16.
NG >> Replace ECM relay.

16. CHECK INTERMITTENT INCIDENT

Refer to EC-70.

>> INSPECTION END

Component Inspection

INFOID:0000000003855839

ECM RELAY

1. Disconnect ECM relay.
2. Check continuity between ECM relay terminals under the following conditions.

Terminals	Conditions	Continuity
3 and 5	12 V direct current supply between terminals 1 and 2	Existed
	No current supply	Not existed

If NG, replace cooling fan relay.

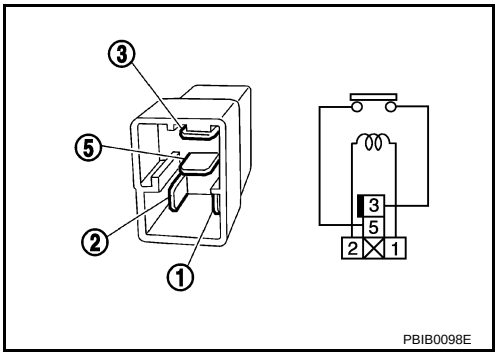

Ground Inspection

INFOID:0000000003759338

Ground connections are very important to the proper operation of electrical and electronic circuits. Ground connections are often exposed to moisture, dirt and other corrosive elements. The corrosion (rust) can become an unwanted resistance. This unwanted resistance can change the way a circuit works.
Electronically controlled circuits are very sensitive to proper grounding. A loose or corroded ground can drastically affect an electronically controlled circuit. A poor or corroded ground can easily affect the circuit. Even when the ground connection looks clean, there can be a thin film of rust on the surface.
When inspecting a ground connection follow these rules:

- Remove the ground bolt or screw.
- Inspect all mating surfaces for tarnish, dirt, rust, etc.
- Clean as required to assure good contact.
- Reinstall bolt or screw securely.
- Inspect for “add-on” accessories which may be interfering with the ground circuit.
- If several wires are crimped into one ground eyelet terminal, check for proper crimps. Make sure all of the wires are clean, securely fastened and providing a good ground path. If multiple wires are cased in one eyelet make sure no ground wires have excess wire insulation.

For detailed ground distribution information, refer to GROUND DISTRIBUTION in EL section.

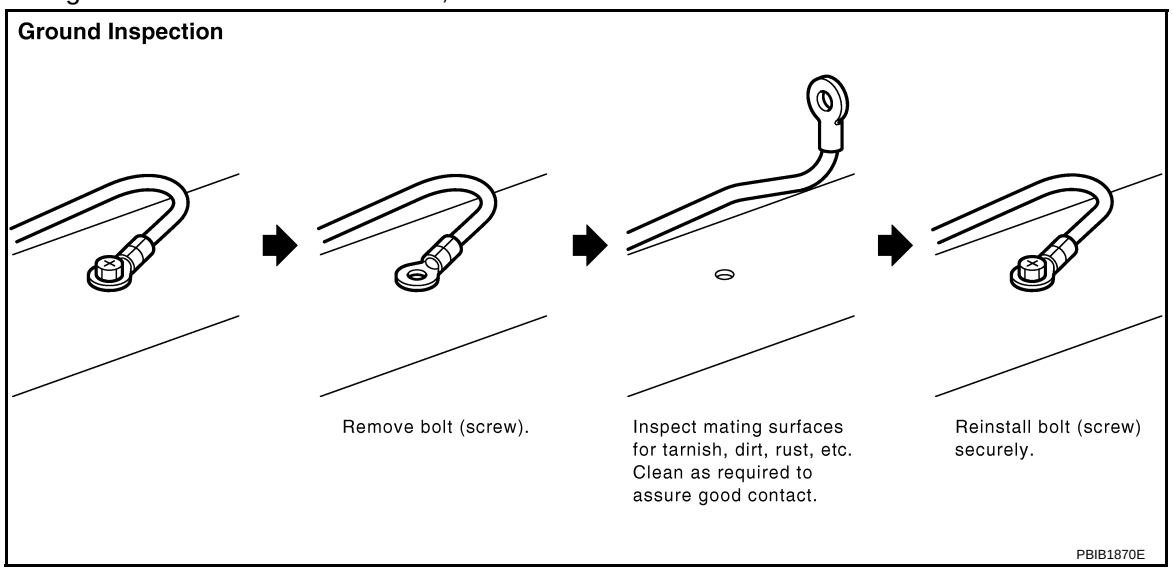

DTC U1000 CAN COMMUNICATION LINE

Description

INFOID:0000000003759339

CAN (Controller Area Network) is a serial communication line for real time application. It is an on-vehicle multiplex communication line with high data communication speed and excellent error detection ability. Many electronic control units are equipped onto a vehicle, and each control unit shares information and links with other control units during operation (not independent). In CAN communication, control units are connected with 2 communication lines (CAN H line, CAN L line) allowing a high rate of information transmission with less wiring. Each control unit transmits/receives data but selectively reads required data only.

On Board Diagnosis Logic

INFOID:0000000003759340

This self-diagnosis has the one trip detection logic.
The MI will not light up for this self-diagnosis.

DTC No.	Trouble diagnosis name	DTC detecting condition	Possible cause
U1000 1000	CAN communication line	When ECM is not transmitting or receiving CAN communication signal of OBD (emission-related diagnosis) for 2 seconds or more.	• Harness or connectors (CAN communication line is open or shorted)

DTC Confirmation Procedure

INFOID:0000000003759341

1. Turn ignition switch ON and wait at least 3 seconds.
2. Check DTC.
3. If DTC is detected, go to EC-84, "Diagnosis Procedure".

Wiring Diagram

INFOID:0000000003759342

EC-CAN-01

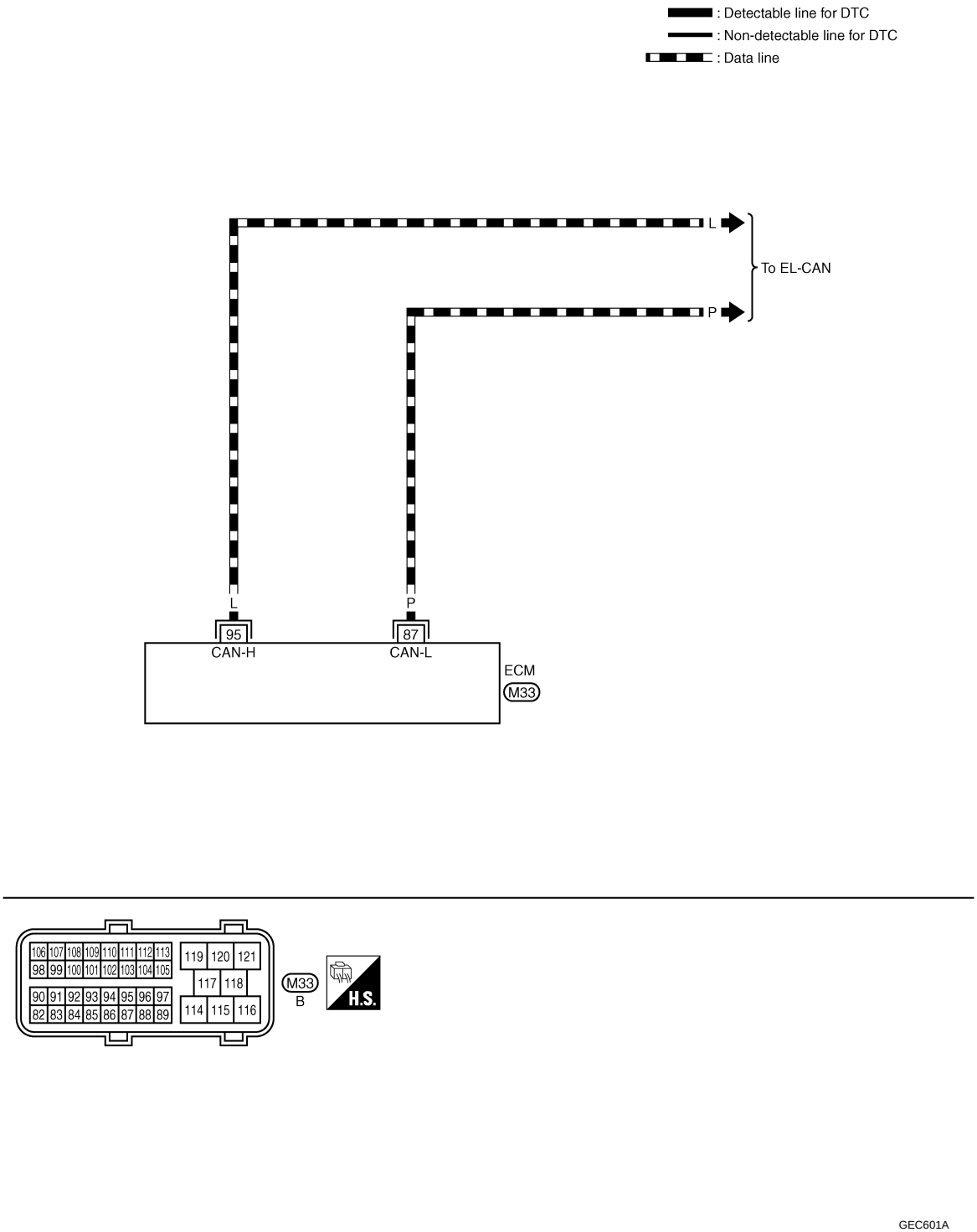

Diagnosis Procedure

INFOID:0000000003759343

Go to EL-110, "CAN System Specification Chart".

DTC P0016 CKP - CMP CORRELATION

On Board Diagnosis Logic

INFOID:0000000003759344

NOTE:
If DTC P0016 is displayed with DTC P0652 or P0653, first perform trouble diagnosis for DTC P0652 or P0653. Refer to EC-214.

DTC No.	Trouble diagnosis name	DTC detecting condition	Possible cause
P0016 0016	Crankshaft position - camshaft position correlation	The correlation between crankshaft position sensor signal and camshaft position sensor signal is out of the normal range.	• Camshaft position sensor • Crankshaft position sensor • Timing chain • Signal plate

DTC Confirmation Procedure

INFOID:0000000003759345

NOTE:
If DTC Confirmation Procedure has been previously conducted, always turn ignition switch OFF and wait at least 10 seconds before conducting the next test.

1. Start engine and let it idle for at least 5 seconds.
2. Check 1st trip DTC.
3. If 1st trip DTC is detected, go to EC-85, "Diagnosis Procedure".

Diagnosis Procedure

INFOID:0000000003759346

1. CHECK CAMSHAFT POSITION SENSOR

Refer to EC-166, "Component Inspection".

OK or NG

OK >> GO TO 2.
NG >> Replace camshaft position sensor.

2. CHECK SPROCKET

Visually check for chipping signal plate gear tooth.

OK or NG

OK >> GO TO 3.
NG >> Remove debris and clean the signal plate or replace sprocket.

3. CHECK CRANKSHAFT POSITION SENSOR

Refer to EC-156, "Component Inspection".

OK or NG

OK >> GO TO 4.
NG >> Replace crankshaft position sensor.

4. CHECK GEAR TOOTH

Visually check for chipping signal plate gear tooth.

OK or NG

OK >> GO TO 5.
NG >> Replace the signal plate.

5. CHECK TIMING CHAIN

Refer to EM-5.

OK or NG

OK >> GO TO 6.
NG >> Replace timing chain.

6. CHECK INTERMITTENT INCIDENT

Refer to EC-70.

>> **INSPECTION END**

DTC P0088 FUEL SYSTEM

On Board Diagnosis Logic

INFOID:0000000003759355

NOTE:
If DTC P0088 is displayed with DTC P0652 or P0653, first perform trouble diagnosis for DTC P0652 or P0653. Refer to EC-214.

DTC No.	Trouble diagnosis name	DTC detecting condition	Possible cause
P0088 0088	Fuel rail pressure too high	Fuel pressure is too much higher than the specified value.	• Fuel pump • Fuel injector • Fuel rail pressure sensor

DTC Confirmation Procedure

INFOID:0000000003759356

NOTE:
If DTC Confirmation Procedure has been previously conducted, always turn ignition switch OFF and wait at least 10 seconds before conducting the next test.

1. Start engine and warm it up to normal operating temperature.
2. Keep engine speed more than 2,000 rpm for at least 20 seconds.
3. Check 1st trip DTC.
4. If 1st trip DTC is detected, go to EC-87, "Diagnosis Procedure".

Diagnosis Procedure

INFOID:0000000003759357

1. CHECK FUEL RAIL PRESSURE SENSOR

Refer to EC-131, "Component Inspection".

OK or NG

OK >> GO TO 2.
NG >> Replace fuel rail.

2. CHECK FUEL INJECTOR

Refer to EC-137, "Component Inspection".

OK or NG

OK >> GO TO 4.
NG >> GO TO 3.

3. REPLACE FUEL INJECOR

1. Replace fuel injector of malfunctioning cylinder.
2. Perform Injector Adjustment Value Registration. Refer to EC-22, "Injector Adjustment Value Registration".

>> **INSPECTION END**

4. CHECK FUEL PUMP

Refer to EC-208, "Component Inspection".

OK or NG

OK >> GO TO 6.
NG >> GO TO 5.

5. REPLACE FUEL PUMP

1. Replace fuel pump.
2. Perform Fuel Pump Learning Value Clearing. Refer to EC-23, "Fuel Pump Learning Value Clearing".

>> **INSPECTION END**

6. CHECK INTERMITTENT INCIDENT

Refer to EC-70.

>> **INSPECTION END**

Removal and Installation

INFOID:0000000003759358

FUEL INJECTOR

Refer to EM-8.

FUEL PUMP

Refer to EC-24.

DTC P0089 FUEL PUMP

On Board Diagnosis Logic

INFOID:0000000003759359

NOTE:
If DTC P0089 is displayed with DTC P0652 or P0653, first perform trouble diagnosis for DTC P0652 or P0653. Refer to EC-214.

DTC No.	Trouble diagnosis name	DTC detecting condition	Possible cause
P0089 0089	Fuel pump performance	Fuel pressure is too much higher than the target value.	• Fuel pump • Air mixed with fuel • Lack of fuel • Fuel rail pressure sensor

DTC Confirmation Procedure

INFOID:0000000003759360

NOTE:
If DTC Confirmation Procedure has been previously conducted, always turn ignition switch OFF and wait at least 10 seconds before conducting the next test.

1. Start engine and warm it up to normal operating temperature.
2. Let engine idle for at least 30 seconds.
3. Check 1st trip DTC.
4. If 1st trip DTC is detected, go to EC-89, "Diagnosis Procedure".

Diagnosis Procedure

INFOID:0000000003759361

1. PERFORM FUEL PUMP LEARNING VALUE CLEARING

NOTE:
If the DTC is detected because of air mixed with fuel (i.e.: caused by lack of fuel), it may become normal by performing following procedure.

With CONSULT-III

1. Turn ignition switch ON.
2. Perform Fuel Pump Learning Value Clearing. Refer to EC-23, "Fuel Pump Learning Value Clearing".
3. Start engine and let it idle for at least 60 seconds.
4. Select “SELF-DIAG RESULT” mode with CONSULT-III.
5. Touch “ERASE”.
6. Perform EC-89, "DTC Confirmation Procedure", again.
7. Is 1st trip DTC detected again?

With GST

1. Turn ignition switch ON.
2. Perform Fuel Pump Learning Value Clearing. Refer to EC-23, "Fuel Pump Learning Value Clearing".
3. Start engine and let it idle for at least 60 seconds.
4. Select Service $04 with GST.
5. Perform EC-89, "DTC Confirmation Procedure", again.
6. Is 1st trip DTC detected again?

Yes or No

Yes >> GO TO 2.
No >> **INSPECTION END**

2. CHECK FUEL RAIL PRESSURE SENSOR

Refer to EC-131, "Component Inspection".

OK or NG

OK >> GO TO 3.
NG >> Replace fuel rail.

3. CHECK FUEL PUMP

Perform EC-205, "DTC Confirmation Procedure".

OK or NG

OK >> GO TO 5.
NG >> GO TO 4.

4. REPLACE FUEL PUMP

1. Replace Fuel pump.
2. Perform Fuel Pump Learning Value Clearing. Refer to EC-23, "Fuel Pump Learning Value Clearing".

>> **INSPECTION END**

5. CHECK INTERMITTENT INCIDENT

Refer to EC-70.

>> **INSPECTION END**

Removal and Installation

INFOID:0000000003759362

FUEL PUMP

Refer to EC-24.

DTC P0093 FUEL SYSTEM

On Board Diagnosis Logic

INFOID:0000000003759363

NOTE:
If DTC P0093 is displayed with DTC P0652 or P0653, first perform trouble diagnosis for DTC P0652 or P0653. Refer to EC-214.

DTC No.	Trouble diagnosis name	DTC detecting condition	Possible cause
P0093 0093	Fuel system leak	ECM detects a fuel system leak. (The relation between the output voltage to the fuel pump and input voltage from the fuel rail pressure sensor is out of the normal range.)	• Fuel pump • Fuel rail • Fuel pipe • Fuel rail pressure relief valve • Air mixed with fuel • Lack of fuel

Overall Function Check

INFOID:0000000003759364

Use this procedure to check the overall function of the fuel system. During this check, a 1st trip DTC might not be confirmed.

NOTE:
- **Make sure that there is no fire hazard near the vehicle.**
- **Before performing the following procedure, cool down engine.**

WITH CONSULT-III

1. Open engine hood and check if there are any signs of fuel leakage or not.
   If there are any signs, go to EC-92, "Diagnosis Procedure".
   If there is no signs, go to next step.
2. Check oil level.
   If oil level is above the proper range, go to EC-92, "Diagnosis Procedure".
   If oil level is within the proper range, go to next step.
3. Start engine and check fuel leakage in the engine room.
   If fuel leakage is found, go to EC-92, "Diagnosis Procedure".
   If fuel leakage is not found, go to next step.
4. Select “DATA MONITOR” mode with CONSULT-III.
5. Check the fuel rail pressure at the idle speed.

   Fuel rail pressure: 25 - 35 MPa

6. If NG, go to EC-92, "Diagnosis Procedure".

WITH GST

1. Open engine hood and check if there are any signs of fuel leakage or not.
   If there are any signs, go to EC-92, "Diagnosis Procedure".
   If there is no signs, go to next step.
2. Check oil level.
   If oil level is above the proper range, go to EC-92, "Diagnosis Procedure".
   If oil level is within the proper range, go to next step.
3. Start engine and check fuel leakage in the engine room.
   If fuel leakage is found, go to EC-92, "Diagnosis Procedure".
   If fuel leakage is not found, go to next step.
4. Select Service $1 mode with GST.
5. Check the fuel rail pressure at the idle speed.

   Fuel rail pressure: 25 - 35 MPa

6. If NG, go to EC-92, "Diagnosis Procedure".

Diagnosis Procedure

INFOID:0000000003759365

1. PERFORM FUEL PUMP LEARNING VALUE CLEARING

NOTE:
If the DTC is detected because of air mixed with fuel (i.e.: caused by lack of fuel), it may become normal by performing following procedure.

With CONSULT-III

1. Turn ignition switch ON.
2. Perform Fuel Pump Learning Value Clearing. Refer to EC-23, "Fuel Pump Learning Value Clearing".
3. Start engine and let it idle for at least 60 seconds.
4. Select “SELF-DIAG RESULT” mode with CONSULT-III.
5. Touch “ERASE”.
6. Perform EC-91, "Overall Function Check", again.
7. Is the result NG again?

With GST

1. Turn ignition switch ON.
2. Perform Fuel Pump Learning Value Clearing. Refer to EC-23, "Fuel Pump Learning Value Clearing".
3. Start engine and let it idle for at least 60 seconds.
4. Select Service $04 with GST.
5. Perform EC-91, "Overall Function Check", again.
6. Is the result NG again?

Yes or No

Yes >> GO TO 2.
No >> **INSPECTION END**

2. CHECK FUEL LINE FOR LEAK

1. Start engine.
2. Visually check the following for fuel leak.
- Fuel tube from fuel pump to fuel rail
- Fuel rail
- Fuel tube from fuel rail to fuel injector
3. Also check for improper connection or pinches.

OK or NG

OK >> GO TO 3.
NG >> Repair malfunctioning part.

3. CHECK FUEL RAIL PRESSURE RELIEF VALVE

Refer to EC-92, "Component Inspection".

OK or NG

OK >> GO TO 4.
NG >> Replace fuel rail.

4. CHECK INTERMITTENT INCIDENT

Refer to EC-70.

OK or NG

OK >> GO TO 5.
NG >> Repair or replace.

5. REPLACE FUEL PUMP

1. Replace fuel pump.
2. Perform Fuel Pump Learning Value Clearing. Refer to EC-23, "Fuel Pump Learning Value Clearing".

>> **INSPECTION END**

Component Inspection

INFOID:0000000003759366

FUEL RAIL PRESSURE RELIEF VALVE

With CONSULT-III

WARNING:
- **Confirm that the engine is cooled down and there are no fire hazards near the vehicle.**
- **Prepare pans or saucers under the disconnected fuel line because the fuel may spill out.**

1. Turn ignition switch OFF.
2. Remove fuel hose from fuel rail pressure relief valve (1).

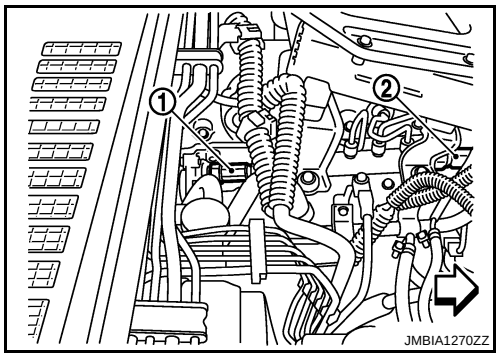

⇦ : Vehicle front

- Fuel rail pressure sensor (2)

3. Attach a blind cap or plug to removed hose.
4. Turn ignition switch ON.
5. Select “PRES REGULATOR” in “ACTIVE TEST” with CONSULT-III.
6. Start engine and keep engine speed 2,000 rpm.
7. Raise fuel pressure to 180 MPa with touching “UP” or “Qu” on the CONSULT-III screen.
8. Confirm that the fuel does not come out from the fuel rail pressure relief valve.

WARNING:
- **Be careful not to allow leaked fuel to contaminate engine compartment. Especially, ensure to keep engine mount insulator clear of fuel.**
- **If the fuel comes out, stop the engine immediately.**

Without CONSULT-III

WARNING:
- **Confirm that the engine is cooled down and there are no fire hazards near the vehicle.**
- **Prepare pans or saucers under the disconnected fuel line because the fuel may spill out.**

1. Turn ignition switch OFF.
2. Remove fuel hose from fuel rail pressure relief valve (1).

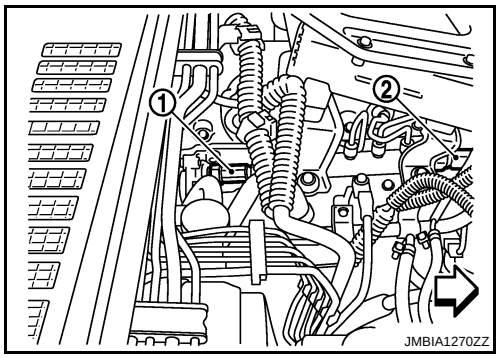

⇦ : Vehicle front

- Fuel rail pressure sensor (2)

3. Attach a blind cap or plug to removed hose.
4. Start engine and keep engine speed more than 4,000 rpm for at least 5 seconds.
5. Confirm that the fuel does not come out from the fuel rail pressure relief valve.

WARNING:
- **Be careful not to allow leaked fuel to contaminate engine compartment. Especially, ensure to keep engine mount insulator clear of fuel.**
- **If the fuel comes out, stop the engine immediately.**

Removal and Installation

INFOID:0000000003759367

FUEL RAIL

Refer to EM-8.

FUEL PUMP

Refer to EC-24.

DTC P0101 MAF SENSOR

Component Description

INFOID:0000000003759368

The mass air flow sensor (1) is placed in the stream of intake air. It measures the intake flow rate by measuring a part of the entire intake flow. The mass air flow sensor controls the temperature of the hot wire to a certain amount. The heat generated by the hot wire is reduced as the intake air flows around it. The more air, the greater the heat loss.
Therefore, the electric current supplied to hot wire is changed to maintain the temperature of the hot wire as air flow increases. The ECM detects the air flow by means of this current change.

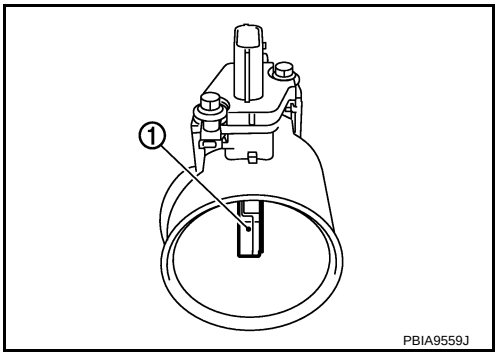

CONSULT-III Reference Value in Data Monitor Mode

INFOID:0000000003759369

Specification data are reference values.

MONITOR ITEM	CONDITION		SPECIFICATION
MAS AIR/FL SE*	• Engine: After warming up • Air conditioner switch: OFF • Shift lever: Neutral position • No load	Ignition switch: ON (Engine stopped)	Approximately 0.4 V
		Idle	1.3 - 1.8 V
		Engine is revving from idle to about 4,000 rpm.	1.3 - 1.8 V to Approximately 4.0 V (Check for liner voltage rise in response to engine being increased to about 4,000 rpm)

*: This signal is converted by ECM internally. Thus this differs from ECM terminal voltage.

On Board Diagnosis Logic

INFOID:0000000003759370

If DTC P0101 is displayed with DTC P0403, first perform trouble diagnosis for DTC P0403. Refer to EC-177.
If DTC P0101 is displayed with DTC P0409, first perform trouble diagnosis for DTC P0409. Refer to EC-190.
If DTC P0101 is displayed with DTC P0488, first perform trouble diagnosis for DTC P0488. Refer to EC-196.

DTC No.	Trouble diagnosis name	DTC detecting condition	Possible cause
P0101 0101	Mass air flow sensor circuit range/performance	Improper voltage from the sensor is sent to ECM compared with the driving condition.	• Harness or connectors (The sensor circuit is open or shorted.) • Mass air flow sensor • Intake air leaks • Air cleaner • Intake air temperature sensor • EGR volume control valve

DTC Confirmation Procedure

INFOID:0000000003759371

CAUTION:
Always drive vehicle at a safe speed.
NOTE:
If DTC Confirmation Procedure has been previously conducted, always turn ignition switch OFF and wait at least 10 seconds before conducting the next test.

WITH CONSULT-III

1. Turn ignition switch ON.
2. Select “DATA MONITOR” mode with CONSULT-III.

3. Start engine and let it idle for at least 40 seconds.
4. Drive vehicle under the following condition.

CKPS·RPM	Approx. 2800 rpm
VHCL SPEED SE	70 - 100 km/h (43 - 62 MPH)
Shift lever	4th position

5. Release accelerator pedal for at least 10 seconds.
   Do not depress brake pedal during this procedure.
6. Check 1st trip DTC.
7. If 1st trip DTC is detected, go to EC-99, "Diagnosis Procedure".

WITH GST

Follow the procedure “WITH CONSULT-III” above.

Wiring Diagram

INFOID:0000000003759372

LHD MODELS

EC-MAFS-01

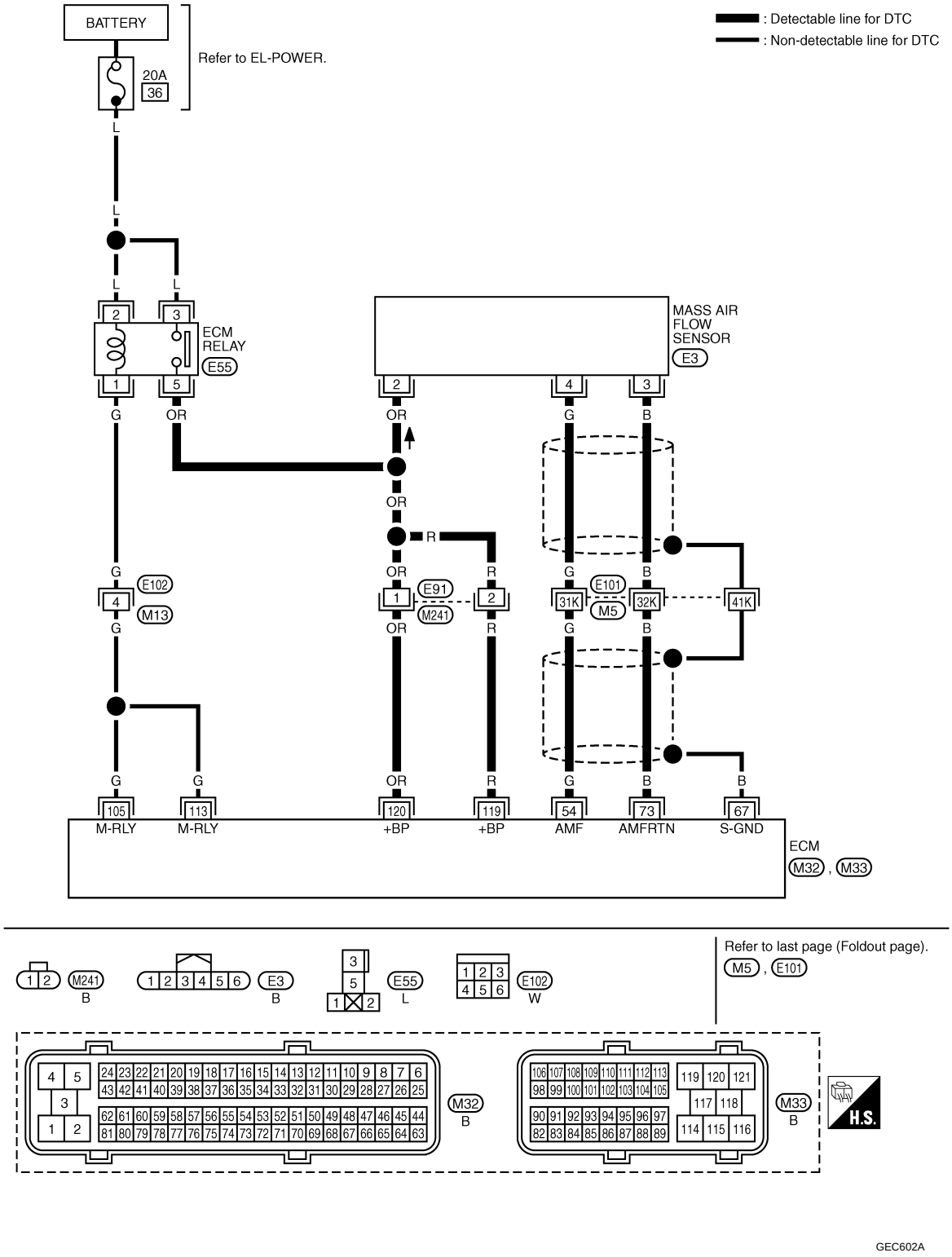

Specification data are reference values, and are measured between each terminal and ground.

TERMINAL NO. (Wire color)		Description	Condition	Value (Approx.)
+	–	Signal name		
54 (G)	73 (B)	Mass air flow sensor	**[Ignition switch ON]**	Approximately 0.4 V
			[Engine is running] • **Warm-up condition** • Idle speed	1.3 - 1.8 V
			[Engine is running] • **Warm-up condition** • Engine is revving from idle to about 4,000 rpm.	1.3 - 1.8 V to Approximately 4.0 V (Check for liner voltage rise in response to engine being increased to about 4,000 rpm)
67 (B)	—	Sensor ground (Sensor shield circuit)	—	—
73 (B)	—	Mass air flow sensor ground	—	—
105 (G) 113 (G)	114 (B)	ECM relay (self shut-off)	**[Ignition switch ON]** **[Ignition switch OFF]** • For a few seconds after turning ignition switch OFF	0 - 1.0 V
			[Ignition switch OFF] • More than a few seconds after turning ignition switch OFF	BATTERY VOLTAGE (11 - 14 V)
119 (R) 120 (OR)	114 (B)	Power supply for ECM	**[Ignition switch ON]**	BATTERY VOLTAGE (11 - 14 V)

★: Average voltage for pulse signal (Actual pulse signal can be confirmed by oscilloscope.)

RHD MODELS

EC-MAFS-02

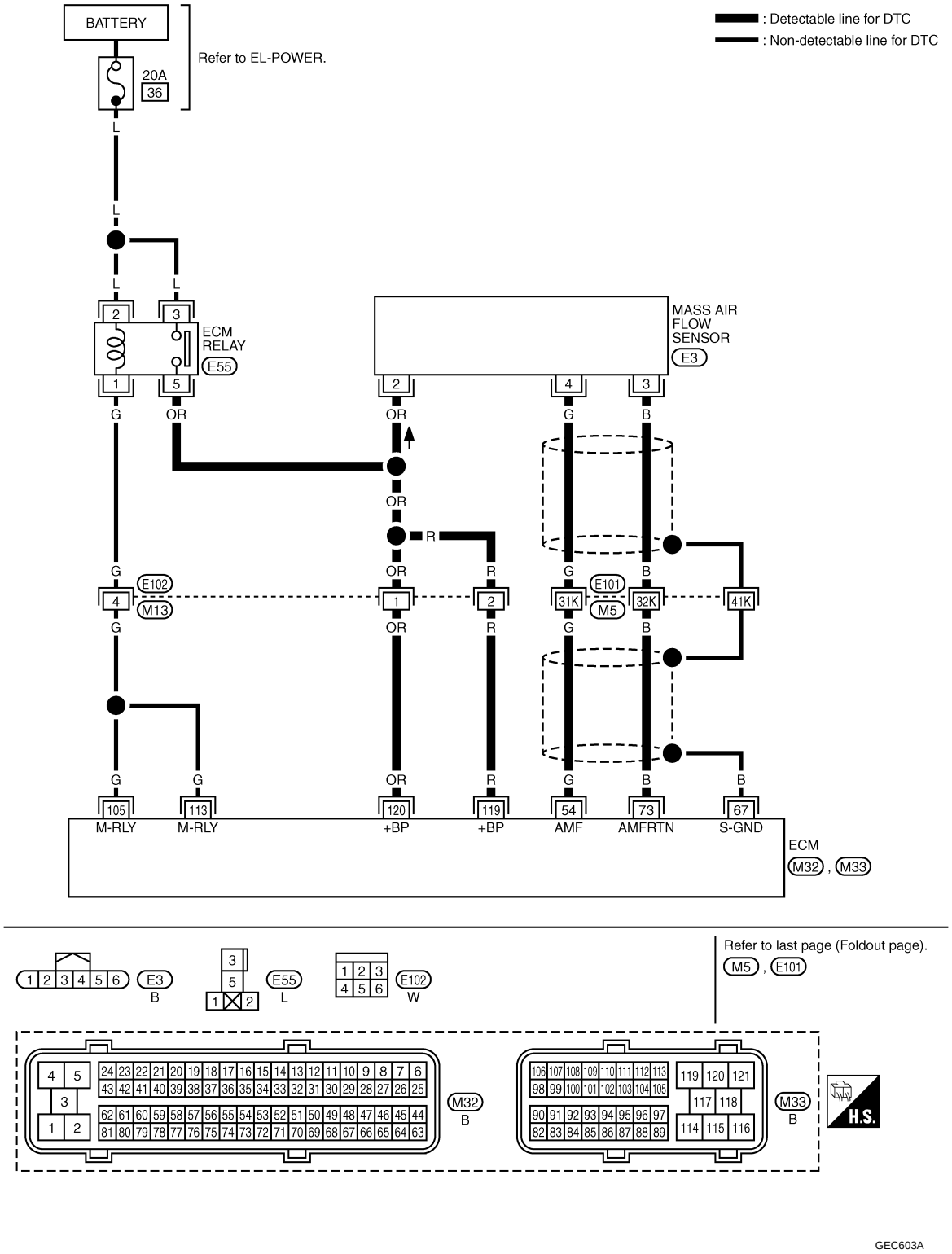

Specification data are reference values, and are measured between each terminal and ground.

TERMINAL NO. (Wire color)		Description	Condition	Value (Approx.)
+	–	Signal name		
54 (G)	73 (B)	Mass air flow sensor	**[Ignition switch ON]**	Approximately 0.4 V
			[Engine is running] • **Warm-up condition** • Idle speed	1.3 - 1.7 V
			[Engine is running] • **Warm-up condition** • Engine is revving from idle to about 4,000 rpm.	1.3 - 1.7 V to Approximately 4.0 V (Check for liner voltage rise in response to engine being increased to about 4,000 rpm)
67 (B)	—	Sensor ground (Sensor shield circuit)	—	—
73 (B)	—	Mass air flow sensor ground	—	—
105 (G) 113 (G)	114 (B)	ECM relay (self shut-off)	**[Ignition switch ON]** **[Ignition switch OFF]** • For a few seconds after turning ignition switch OFF	0 - 1.0 V
			[Ignition switch OFF] • More than a few seconds after turning ignition switch OFF	BATTERY VOLTAGE (11 - 14 V)
119 (R) 120 (OR)	114 (B)	Power supply for ECM	**[Ignition switch ON]**	BATTERY VOLTAGE (11 - 14 V)

★: Average voltage for pulse signal (Actual pulse signal can be confirmed by oscilloscope.)

Diagnosis Procedure

INFOID:0000000003759373

1. CHECK INTAKE SYSTEM

1. Check air cleaner for clogging.
2. Check the following for connection and cracks.
- Air duct
- Vacuum hoses
- Intake air passage between air duct and intake manifold

OK or NG

OK >> GO TO 2.
NG >> Reconnect or repair the parts.

2. CHECK GROUND CONNECTIONS

1. Turn ignition switch OFF.
2. Loosen and retighten ground screws on the body.
   Refer to EC-81, "Ground Inspection".
- Body ground M97 (1)
- Body ground M99 (2)
- ECM (3)

OK or NG

OK >> GO TO 3.
NG >> Repair or replace ground connections.

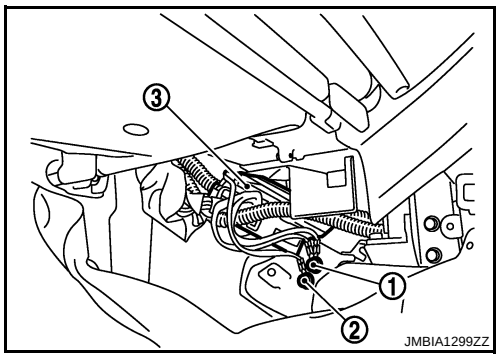

3. CHECK MAF SENSOR POWER SUPPLY CIRCUIT

1. Disconnect mass air flow sensor (1) harness connector.

   ⇦ : Vehicle front

2. Turn ignition switch ON.

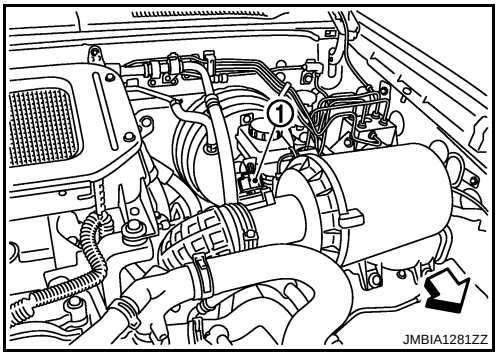

3. Check voltage between mass air flow sensor terminal 2 and ground with CONSULT-III or tester.

   Voltage: Battery voltage

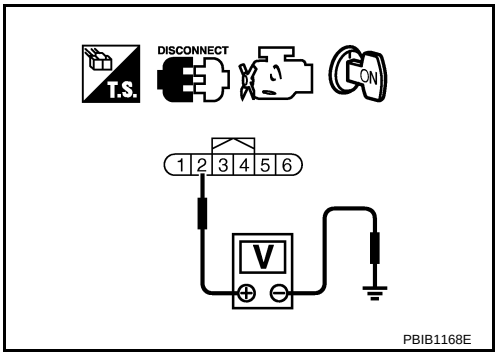

OK or NG

OK >> GO TO 5.
NG >> GO TO 4.

4. DETECT MALFUNCTIONING PART

Check the following.
- Harness for open or short between mass air flow sensor and ECM relay
- Harness for open or short between mass air flow sensor and ECM
- Harness connectors E91,M241 (LHD models)
- Harness connectors E102,M13 (RHD models)

>> Repair open circuit or short to ground or short to power in harness or connectors.

5. CHECK MAF SENSOR GROUND CIRCUIT FOR OPEN AND SHORT

1. Turn ignition switch OFF.
2. Disconnect ECM harness connector.
3. Check harness continuity between mass air flow sensor terminal 3 and ECM terminal 73. Refer to Wiring Diagram.

   Continuity should exist.

4. Also check harness for short to ground and short to power.

OK or NG

OK >> GO TO 7.
NG >> GO TO 6.

6. DETECT MALFUNCTIONING PART

Check the following.
- Harness connectors E101,M5
- Harness for open or short between mass air flow sensor and ECM

>> Repair open circuit or short to ground or short to power in harness or connectors.

7. CHECK MAF SENSOR INPUT SIGNAL CIRCUIT FOR OPEN AND SHORT

1. Check harness continuity between mass air flow sensor terminal 4 and ECM terminal 54. Refer to Wiring Diagram.

   Continuity should exist.

2. Also check harness for short to ground and short to power.

OK or NG

OK >> GO TO 9.
NG >> GO TO 8.

8. DETECT MALFUNCTIONING PART

Check the following.
- Harness connectors E101,M5
- Harness for open or short between mass air flow sensor and ECM

>> Repair open circuit or short to ground or short to power in harness or connectors.

9. CHECK INTAKE AIR TEMPERATURE SENSOR

Refer to EC-114, "Component Inspection".

OK or NG

OK >> GO TO 10.
NG >> Replace mass sir flow sensor (with intake air temperature sensor).

10. CHECK MASS AIR FLOW SENSOR

Refer to EC-101, "Component Inspection".

OK or NG

OK >> GO TO 11.
NG >> Replace mass air flow sensor.

11. CHECK INTERMITTENT INCIDENT

Refer to EC-70.

OK or NG

OK >> GO TO 12.
NG >> Repair or replace.

12. REPLACE EGR VOLUME CONTROL VALVE

1. Replace the EGR volume control valve.
2. Perform EC-24, "EGR Volume Control Valve Closed Position Learning Value Clear".
3. Perform EC-24, "EGR Volume Control Valve Closed Position Learning".

>> **INSPECTION END**

Component Inspection

INFOID:0000000003759374

MASS AIR FLOW SENSOR

With CONSULT-III

1. Reconnect all harness connectors disconnected.
2. Start engine and warm it up to normal operating temperature.
3. Connect CONSULT-III and select “DATA MONITOR” mode.
4. Select “MAS AIR/FL SE” and check indication under the following conditions.

Condition	MAS AIR/FL SE (V)
Ignition switch ON (Engine stopped.)	Approx. 0.4
Idle (Engine is warmed-up to normal operating temperature.)	1.3 - 1.8
Idle to about 4,000 rpm	1.3 - 1.8 to Approx. 4.0*

*: Check for linear voltage rise in response to engine being increased to about 4,000 rpm.

5. If the voltage is out of specification, proceed the following.

a. Check for the cause of uneven air flow through mass air flow sensor. Refer to following.

- Crushed air ducts
- Malfunctioning seal of air cleaner element
- Uneven dirt of air cleaner element
- Improper specification of intake air system parts

b. If NG, repair or replace malfunctioning part and perform step 2 to 4 again.
If OK, go to next step.

6. Turn ignition switch OFF.
7. Disconnect mass air flow sensor harness connector and reconnect it again.
8. Perform step 2 to 4 again.
9. If NG, clean or replace mass air flow sensor.

Without CONSULT-III

1. Reconnect all harness connectors disconnected.
2. Start engine and warm it up to normal operating temperature.
3. Check voltage between ECM harness connectors as follows.

ECM			Condition	Voltage
Connector	+	–		
	Terminal	Terminal		
M32	54 (MAF sensor signal)	73 (Sensor ground)	Ignition switch ON (Engine stopped.)	Approx. 0.4 V
			Idle (Engine is warmed-up to normal operating temperature.)	1.3 - 1.8 V
			Idle to about 4,000 rpm	1.3 - 1.8 V to Approx. 4.0 V*

*: Check for linear voltage rise in response to engine being increased to about 4,000 rpm.

4. If the voltage is out of specification, proceed the following.

a. Check for the cause of uneven air flow through mass air flow sensor. Refer to following.
- Crushed air ducts
- Malfunctioning seal of air cleaner element
- Uneven dirt of air cleaner element
- Improper specification of intake air system parts

b. If NG, repair or replace malfunctioning part and perform step 2 and 3 again.
If OK, go to next step.

5. Turn ignition switch OFF.
6. Disconnect mass air flow sensor harness connector and reconnect it again.
7. Perform step 2 and 3 again.
8. If NG, clean or replace mass air flow sensor.

Removal and Installation

INFOID:0000000003759375

MASS AIR FLOW SENSOR

Refer to EM-6.

DTC P0102, P0103 MAF SENSOR

Component Description

INFOID:0000000003759376

The mass air flow sensor (1) is placed in the stream of intake air. It measures the intake flow rate by measuring a part of the entire intake flow. The mass air flow sensor controls the temperature of the hot wire to a certain amount. The heat generated by the hot wire is reduced as the intake air flows around it. The more air, the greater the heat loss.
Therefore, the electric current supplied to hot wire is changed to maintain the temperature of the hot wire as air flow increases. The ECM detects the air flow by means of this current change.

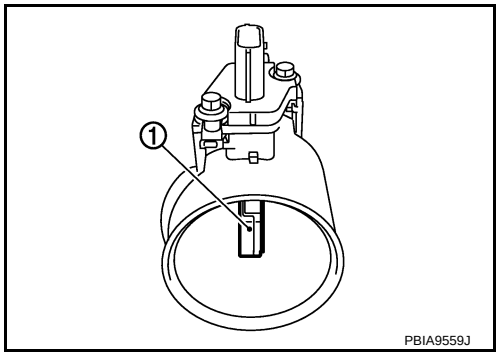

CONSULT-III Reference Value in Data Monitor Mode

INFOID:0000000003759377

Specification data are reference values.

MONITOR ITEM	CONDITION		SPECIFICATION
MAS AIR/FL SE*	• Engine: After warming up • Air conditioner switch: OFF • Shift lever: Neutral position • No load	Ignition switch: ON (Engine stopped)	Approximately 0.4 V
		Idle	1.3 - 1.8 V
		Engine is revving from idle to about 4,000 rpm.	1.3 - 1.8 V to Approximately 4.0 V (Check for liner voltage rise in response to engine being increased to about 4,000 rpm)

*: This signal is converted by ECM internally. Thus this differs from ECM terminal voltage.

On Board Diagnosis Logic

INFOID:0000000003759378

DTC No.	Trouble diagnosis name	DTC detecting condition	Possible cause
P0102 0102	Mass air flow sensor circuit low input	An excessively low voltage from the sensor is sent to ECM.	• Harness or connectors (The sensor circuit is open or shorted.) • Mass air flow sensor
P0103 0103	Mass air flow sensor circuit high input	An excessively high voltage from the sensor is sent to ECM.	

DTC Confirmation Procedure

INFOID:0000000003759379

NOTE:
If DTC Confirmation Procedure has been previously conducted, always turn ignition switch OFF and wait at least 10 seconds before conducting the next test.

1. Turn ignition switch ON.
2. Wait at least 5 seconds.
3. Check 1st trip DTC.
4. If 1st trip DTC is detected, go to EC-107, "Diagnosis Procedure".

Wiring Diagram

INFOID:0000000003759380

LHD MODELS

EC-MAFS-01

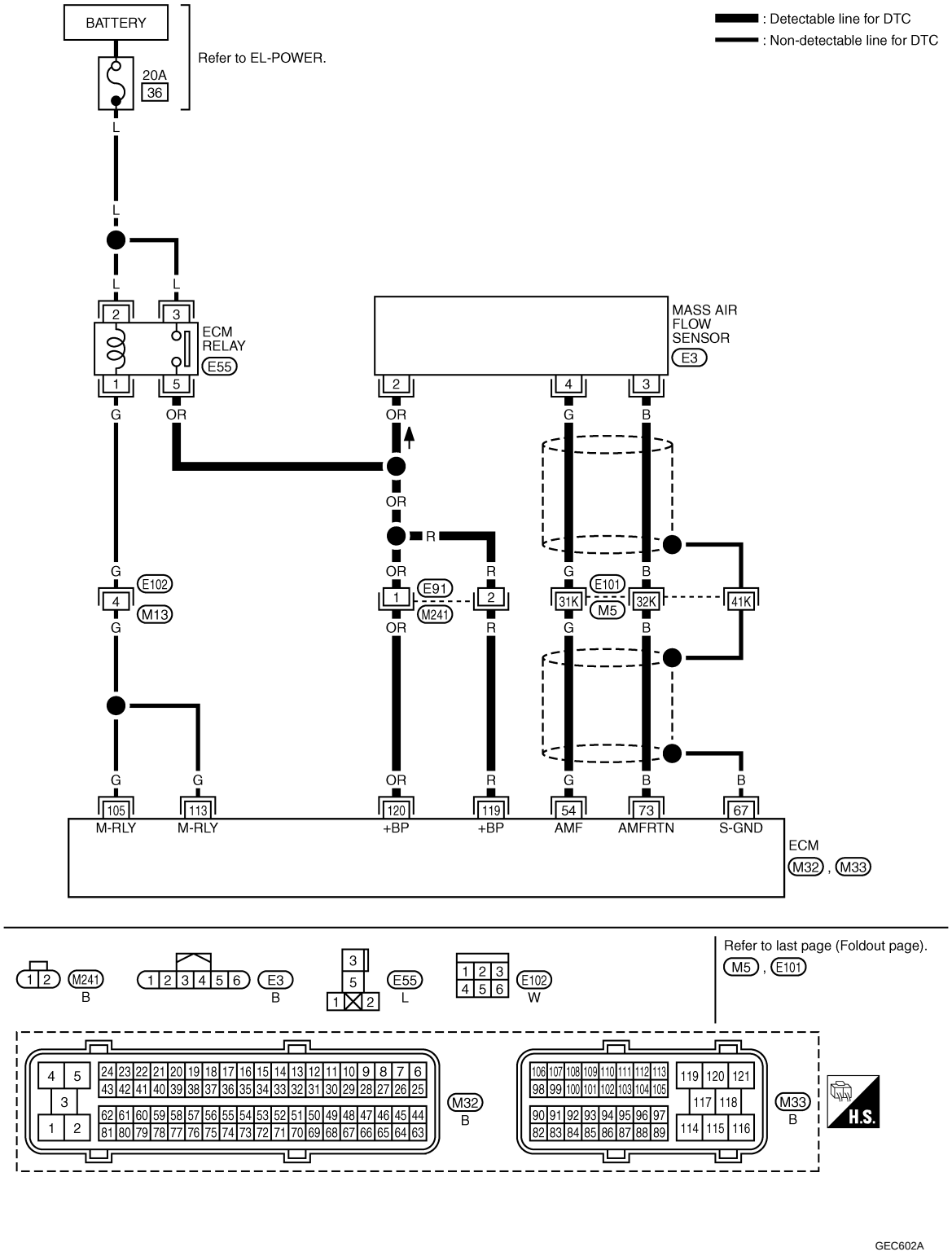

Specification data are reference values, and are measured between each terminal and ground.

TERMINAL NO. (Wire color)		Description	Condition	Value (Approx.)
+	–	Signal name		
54 (G)	73 (B)	Mass air flow sensor	**[Ignition switch ON]**	Approximately 0.4 V
			[Engine is running] • **Warm-up condition** • Idle speed	1.3 - 1.8 V
			[Engine is running] • **Warm-up condition** • Engine is revving from idle to about 4,000 rpm.	1.3 - 1.8 V to Approximately 4.0 V (Check for liner voltage rise in response to engine being increased to about 4,000 rpm)
67 (B)	—	Sensor ground (Sensor shield circuit)	—	—
73 (B)	—	Mass air flow sensor ground	—	—
105 (G) 113 (G)	114 (B)	ECM relay (self shut-off)	**[Ignition switch ON]** **[Ignition switch OFF]** • For a few seconds after turning ignition switch OFF	0 - 1.0 V
			[Ignition switch OFF] • More than a few seconds after turning ignition switch OFF	BATTERY VOLTAGE (11 - 14 V)
119 (R) 120 (OR)	114 (B)	Power supply for ECM	**[Ignition switch ON]**	BATTERY VOLTAGE (11 - 14 V)

RHD MODELS

EC-MAFS-02

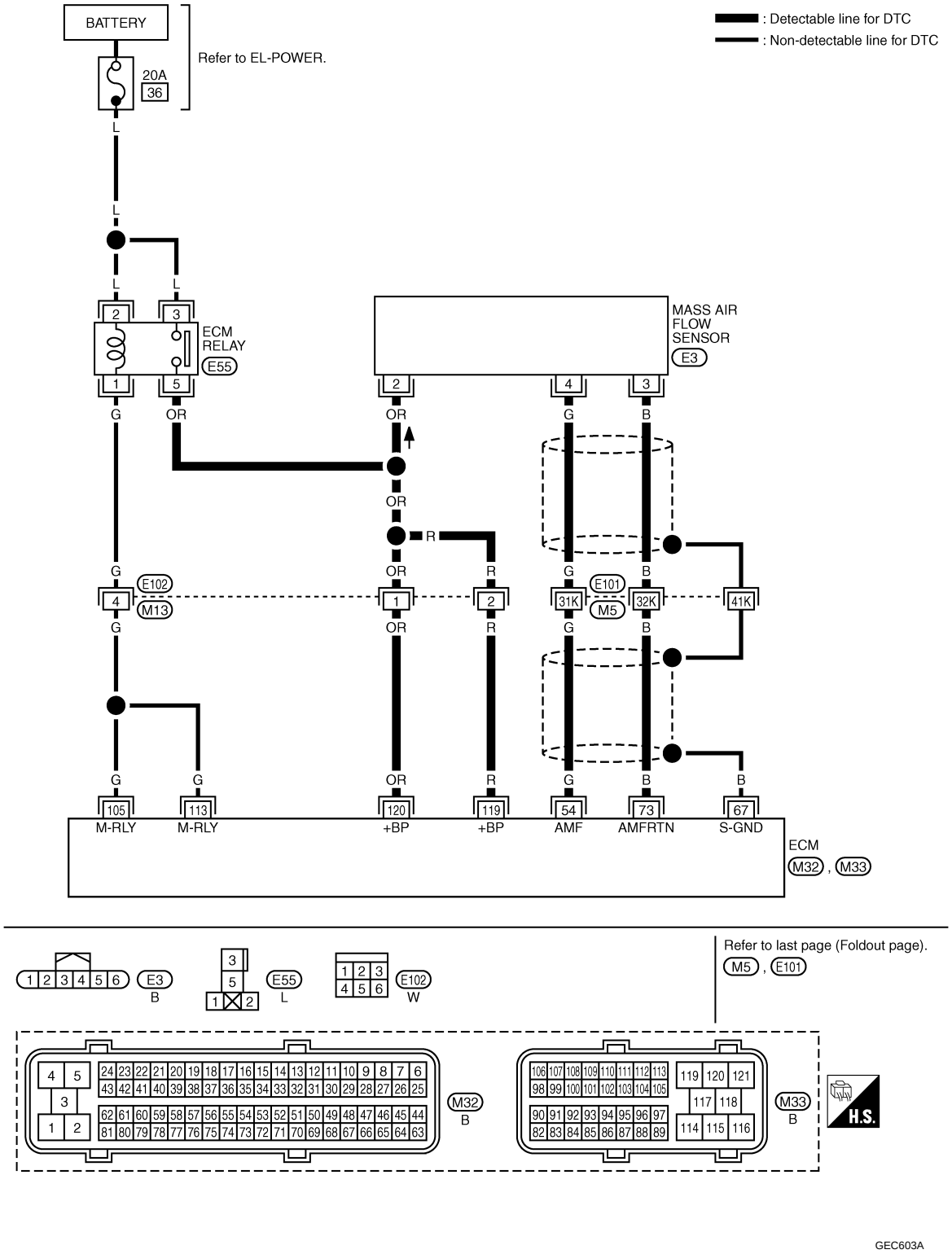

Specification data are reference values, and are measured between each terminal and ground.

TERMINAL NO. (Wire color)		Description	Condition	Value (Approx.)
+	–	Signal name		
54 (G)	73 (B)	Mass air flow sensor	**[Ignition switch ON]**	Approximately 0.4 V
			[Engine is running] • **Warm-up condition** • Idle speed	1.3 - 1.8 V
			[Engine is running] • **Warm-up condition** • Engine is revving from idle to about 4,000 rpm.	1.3 - 1.8 V to Approximately 4.0 V (Check for liner voltage rise in response to engine being increased to about 4,000 rpm)
67 (B)	—	Sensor ground (Sensor shield circuit)	—	—
73 (B)	—	Mass air flow sensor ground	—	—
105 (G) 113 (BR)	114 (B)	ECM relay (self shut-off)	**[Ignition switch ON]** **[Ignition switch OFF]** • For a few seconds after turning ignition switch OFF	0 - 1.0 V
			[Ignition switch OFF] • More than a few seconds after turning ignition switch OFF	BATTERY VOLTAGE (11 - 14 V)
119 (R) 120 (OR)	114 (B)	Power supply for ECM	**[Ignition switch ON]**	BATTERY VOLTAGE (11 - 14 V)

Diagnosis Procedure

INFOID:0000000003759381

1. CHECK GROUND CONNECTIONS

1. Turn ignition switch OFF.
2. Loosen and retighten ground screws on the body.
   Refer to EC-81, "Ground Inspection".

- Body ground M97 (1)
- Body ground M99 (2)
- ECM (3)

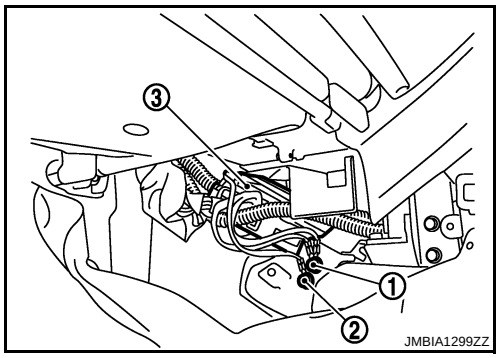

OK or NG

OK >> GO TO 2.
NG >> Repair or replace ground connections.

2. CHECK MAF SENSOR POWER SUPPLY CIRCUIT

1. Disconnect mass air flow sensor (1) harness connector.

   ⇦ : Vehicle front

2. Turn ignition switch ON.

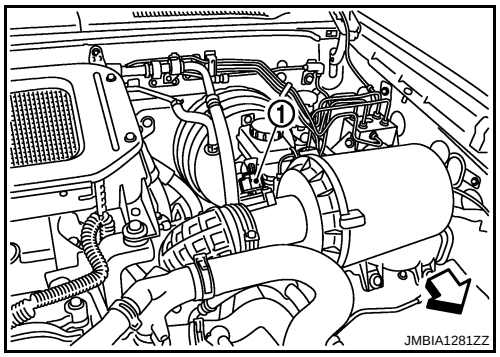

3. Check voltage between mass air flow sensor terminal 2 and ground with CONSULT-III or tester.

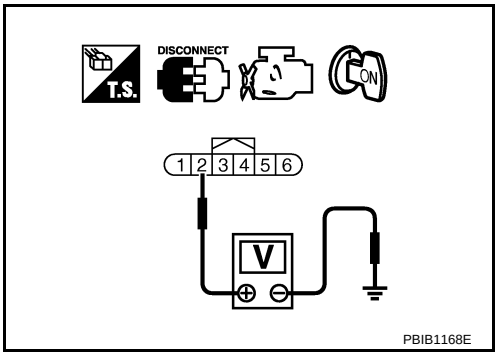

Voltage: Battery voltage

OK or NG

OK >> GO TO 4.
NG >> GO TO 3.

3. DETECT MALFUNCTIONING PART

Check the following.
- Harness for open or short between mass air flow sensor and ECM relay
- Harness for open or short between mass air flow sensor and ECM
- Harness connectors E91,M241 (LHD models)
- Harness connectors E102,M13 (RHD models)

>> Repair open circuit or short to ground or short to power in harness or connectors.

4. CHECK MAF SENSOR GROUND CIRCUIT FOR OPEN AND SHORT

1. Turn ignition switch OFF.
2. Disconnect ECM harness connector.
3. Check harness continuity between mass air flow sensor terminal 3 and ECM terminal 73. Refer to Wiring Diagram.

Continuity should exist.

4. Also check harness for short to ground and short to power.

OK or NG

OK >> GO TO 6.
NG >> GO TO 5.

5. DETECT MALFUNCTIONING PART

Check the following.
- Harness connectors E101,M5
- Harness for open or short between mass air flow sensor and ECM

>> Repair open circuit or short to ground or short to power in harness or connectors.

6. CHECK MAF SENSOR INPUT SIGNAL CIRCUIT FOR OPEN AND SHORT

1. Check harness continuity between mass air flow sensor terminal 4 and ECM terminal 54. Refer to Wiring Diagram.

Continuity should exist.

2. Also check harness for short to ground and short to power.

OK or NG

OK >> GO TO 8.
NG >> GO TO 7.

7. DETECT MALFUNCTIONING PART

Check the following.
- Harness connectors E101,M5
- Harness for open or short between mass air flow sensor and ECM

>> Repair open circuit or short to ground or short to power in harness or connectors.

8. CHECK MASS AIR FLOW SENSOR

Refer to EC-109, "Component Inspection".

OK or NG

OK >> GO TO 9.
NG >> Replace mass air flow sensor.

9. CHECK INTERMITTENT INCIDENT

Refer to EC-70.

>> **INSPECTION END**

Component Inspection

INFOID:0000000003759382

MASS AIR FLOW SENSOR

With CONSULT-III

1. Reconnect all harness connectors disconnected.
2. Start engine and warm it up to normal operating temperature.
3. Connect CONSULT-III and select “DATA MONITOR” mode.
4. Select “MAS AIR/FL SE” and check indication under the following conditions.

Condition	MAS AIR/FL SE (V)
Ignition switch ON (Engine stopped.)	Approx. 0.4
Idle (Engine is warmed-up to normal operating temperature.)	1.3 - 1.8
Idle to about 4,000 rpm	1.3 - 1.8 to Approx. 4.0*

*: Check for linear voltage rise in response to engine being increased to about 4,000 rpm.

5. If the voltage is out of specification, proceed the following.

a. Check for the cause of uneven air flow through mass air flow sensor. Refer to following.
   - Crushed air ducts
   - Malfunctioning seal of air cleaner element
   - Uneven dirt of air cleaner element
   - Improper specification of intake air system parts

b. If NG, repair or replace malfunctioning part and perform step 2 to 4 again.
   If OK, go to next step.

6. Turn ignition switch OFF.
7. Disconnect mass air flow sensor harness connector and reconnect it again.
8. Perform step 2 to 4 again.
9. If NG, clean or replace mass air flow sensor.

Without CONSULT-III

1. Reconnect all harness connectors disconnected.
2. Start engine and warm it up to normal operating temperature.
3. Check voltage between ECM harness connectors as follows.

ECM			Condition	Voltage
Connector	+	–		
	Terminal	Terminal		
M32	54 (MAF sensor signal)	73 (Sensor ground)	Ignition switch ON (Engine stopped.)	Approx. 0.4 V
			Idle (Engine is warmed-up to normal operating temperature.)	1.3 - 1.8 V
			Idle to about 4,000 rpm	1.3 - 1.8 V to Approx. 4.0 V*

*: Check for linear voltage rise in response to engine being increased to about 4,000 rpm.

4. If the voltage is out of specification, proceed the following.

a. Check for the cause of uneven air flow through mass air flow sensor. Refer to following.
   - Crushed air ducts
   - Malfunctioning seal of air cleaner element
   - Uneven dirt of air cleaner element
   - Improper specification of intake air system parts

b. If NG, repair or replace malfunctioning part and perform step 2 and 3 again.
   If OK, go to next step.

5. Turn ignition switch OFF.
6. Disconnect mass air flow sensor harness connector and reconnect it again.
7. Perform step 2 and 3 again.
8. If NG, clean or replace mass air flow sensor.

Removal and Installation

INFOID:0000000003759383

MASS AIR FLOW SENSOR

Refer to EM-6.

DTC P0112, P0113 IAT SENSOR

Component Description

INFOID:0000000003759384

The intake air temperature sensor is built into mass air flow sensor (1). The sensor detects intake air temperature and transmits a signal to the ECM.
The temperature sensing unit uses a thermistor which is sensitive to the change in temperature. Electrical resistance of the thermistor decreases in response to the temperature rise.

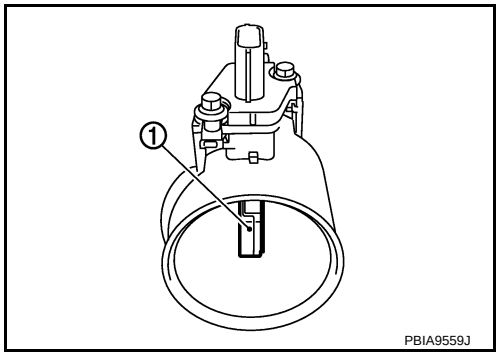

<Reference data>

Intake air temperature [°C (°F)]	Voltage* (V)	Resistance (kΩ)
25 (77)	2.4	1.800 - 2.200
80 (176)	0.8	0.283 - 0.359

*: This data is reference values and is measured between ECM terminal 55 (Intake air temperature sensor) and 74 (sensor ground).

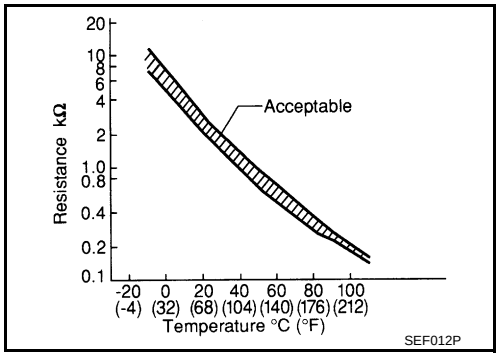

On Board Diagnosis Logic

INFOID:0000000003759385

DTC No.	Trouble diagnosis name	DTC detecting condition	Possible cause
P0112 0112	Intake air temperature sensor circuit low input	An excessively low voltage from the sensor is sent to ECM.	• Harness or connectors (The sensor circuit is open or shorted.) • Intake air temperature sensor
P0113 0113	Intake air temperature sensor circuit high input	An excessively high voltage from the sensor is sent to ECM.	

DTC Confirmation Procedure

INFOID:0000000003759386

NOTE:
If DTC Confirmation Procedure has been previously conducted, always turn ignition switch OFF and wait at least 10 seconds before conducting the next test.

1. Turn ignition switch ON.
2. Wait at least 5 seconds.
3. Check 1st trip DTC.
4. If 1st trip DTC is detected, go to EC-112, "Diagnosis Procedure".

Wiring Diagram

INFOID:0000000003759387

EC-IATS-01

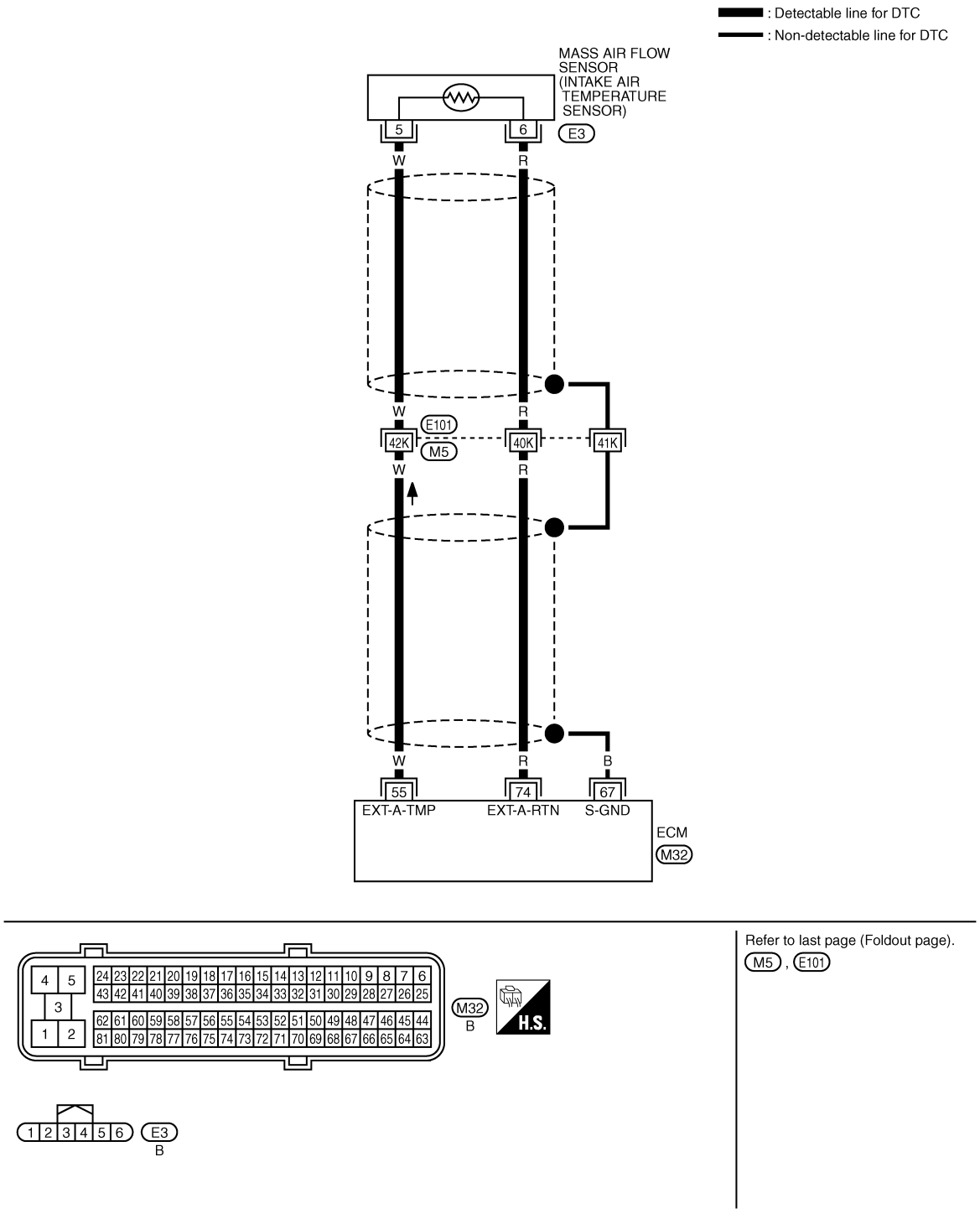

Diagnosis Procedure

INFOID:0000000003759388

1. CHECK GROUND CONNECTIONS

1. Turn ignition switch OFF.

2. Loosen and retighten ground screws on the body.
   Refer to EC-81, "Ground Inspection".
- Body ground M97 (1)
- Body ground M99 (2)
- ECM (3)

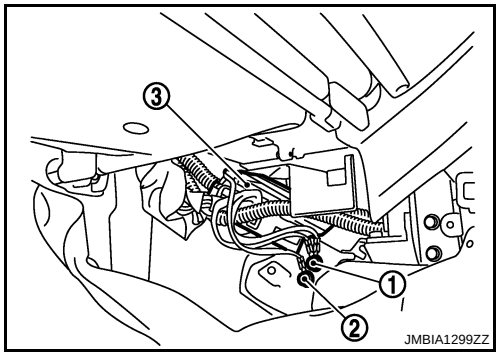

OK or NG

OK >> GO TO 2.
NG >> Repair or replace ground connections.

2. CHECK INTAKE AIR TEMPERATURE SENSOR POWER SUPPLY CIRCUIT

1. Disconnect mass air flow sensor (intake air temperature sensor is built-into) (1) harness connector.

   ⇦ : Vehicle front

2. Turn ignition switch ON.

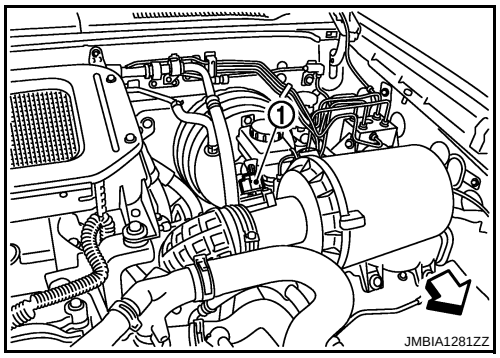

3. Check voltage between mass air flow sensor terminal 5 and ground with CONSULT-III or tester.

   Voltage: Approximately 5 V

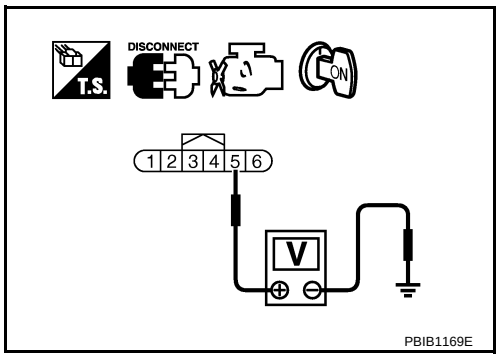

OK or NG

OK >> GO TO 4.
NG >> GO TO 3.

3. DETECT MALFUNCTIONING PART

Check the following.
- Harness connectors E101,M5
- Harness for open or short between mass air flow sensor (with intake air temperature sensor) and ECM

>> Repair open circuit or short to ground or short to power in harness or connectors.

4. CHECK INTAKE AIR TEMPERATURE SENSOR GROUND CIRCUIT FOR OPEN AND SHORT

1. Turn ignition switch OFF.
2. Disconnect ECM harness connector.
3. Check harness continuity between mass air flow sensor terminal 6 and ECM terminal 74.
   Refer to Wiring Diagram.

   Continuity should exist.

4. Also check harness for short to ground and short to power.

OK or NG

OK >> GO TO 6.
NG >> GO TO 5.

5. DETECT MALFUNCTIONING PART

Check the following.

- Harness connectors E101,M5
- Harness for open or short between mass air flow sensor (with intake air temperature sensor) and ECM

>> Repair open circuit or short to ground or short to power in harness or connectors.

6. CHECK INTAKE AIR TEMPERATURE SENSOR

Refer to EC-114, "Component Inspection".

OK or NG

OK >> GO TO 7.
NG >> Replace mass air flow sensor (with intake air temperature sensor).

7. CHECK INTERMITTENT INCIDENT

Refer to EC-70.

>> **INSPECTION END**

Component Inspection

INFOID:0000000003759389

INTAKE AIR TEMPERATURE SENSOR

1. Check resistance between mass air flow sensor (1) terminals 5 and 6 under the following conditions.

Intake air temperature [°C (°F)]	Resistance (kΩ)
25 (77)	1.800 - 2.200

2. If NG, replace mass air flow sensor (with intake air temperature sensor).

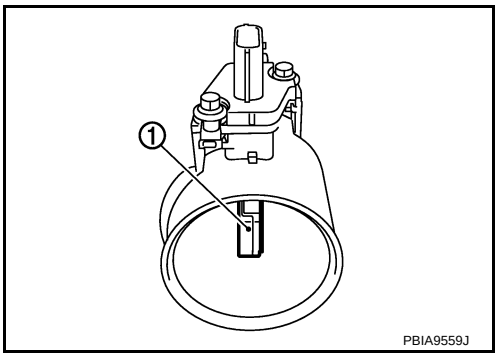

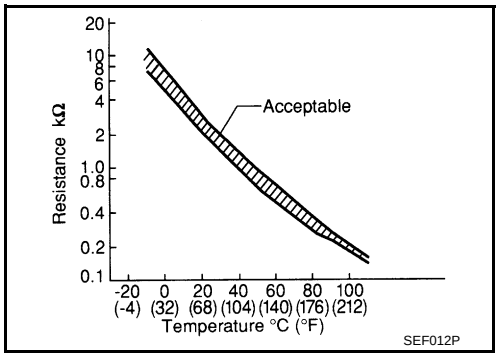

Removal and Installation

INFOID:0000000003759390

MASS AIR FLOW SENSOR

Refer to EM-6.

DTC P0117, P0118 ECT SENSOR

Description

INFOID:0000000003759391

The engine coolant temperature sensor is used to detect the engine coolant temperature. The sensor modifies a voltage signal from the ECM. The modified signal returns to the ECM as the engine coolant temperature input. The sensor uses a thermistor which is sensitive to the change in temperature. The electrical resistance of the thermistor decreases as temperature increases.

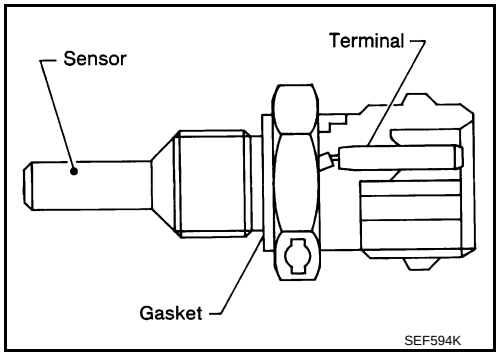

<Reference data>

Engine coolant temperature [°C (°F)]	Voltage* (V)	Resistance (kΩ)
–10 (14)	4.7	7.0 - 11.4
20 (68)	3.8	2.1 - 2.9
50 (122)	2.6	0.68 - 1.00
90 (194)	1.3	0.236 - 0.260

*: This data is reference values and is measured between ECM terminal 51 (Engine coolant temperature sensor) and 70 (sensor ground).

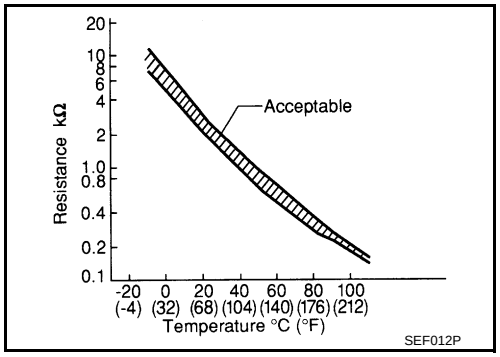

On Board Diagnosis Logic

INFOID:0000000003759392

DTC No.	Trouble diagnosis name	DTC detecting condition	Possible cause
P0117 0117	Engine coolant temperature sensor circuit low input	An excessively low voltage from the sensor is sent to ECM.	• Harness or connectors (The sensor circuit is open or shorted.) • Engine coolant temperature sensor
P0118 0118	Engine coolant temperature sensor circuit high input	An excessively high voltage from the sensor is sent to ECM.	

DTC Confirmation Procedure

INFOID:0000000003759393

NOTE:
If DTC Confirmation Procedure has been previously conducted, always turn ignition switch OFF and wait at least 10 seconds before conducting the next test.

1. Turn ignition switch ON.
2. Wait at least 5 seconds.
3. Check 1st trip DTC.
4. If 1st trip DTC is detected, go to EC-116, "Diagnosis Procedure".

Wiring Diagram

INFOID:0000000003759394

EC-ECTS-01

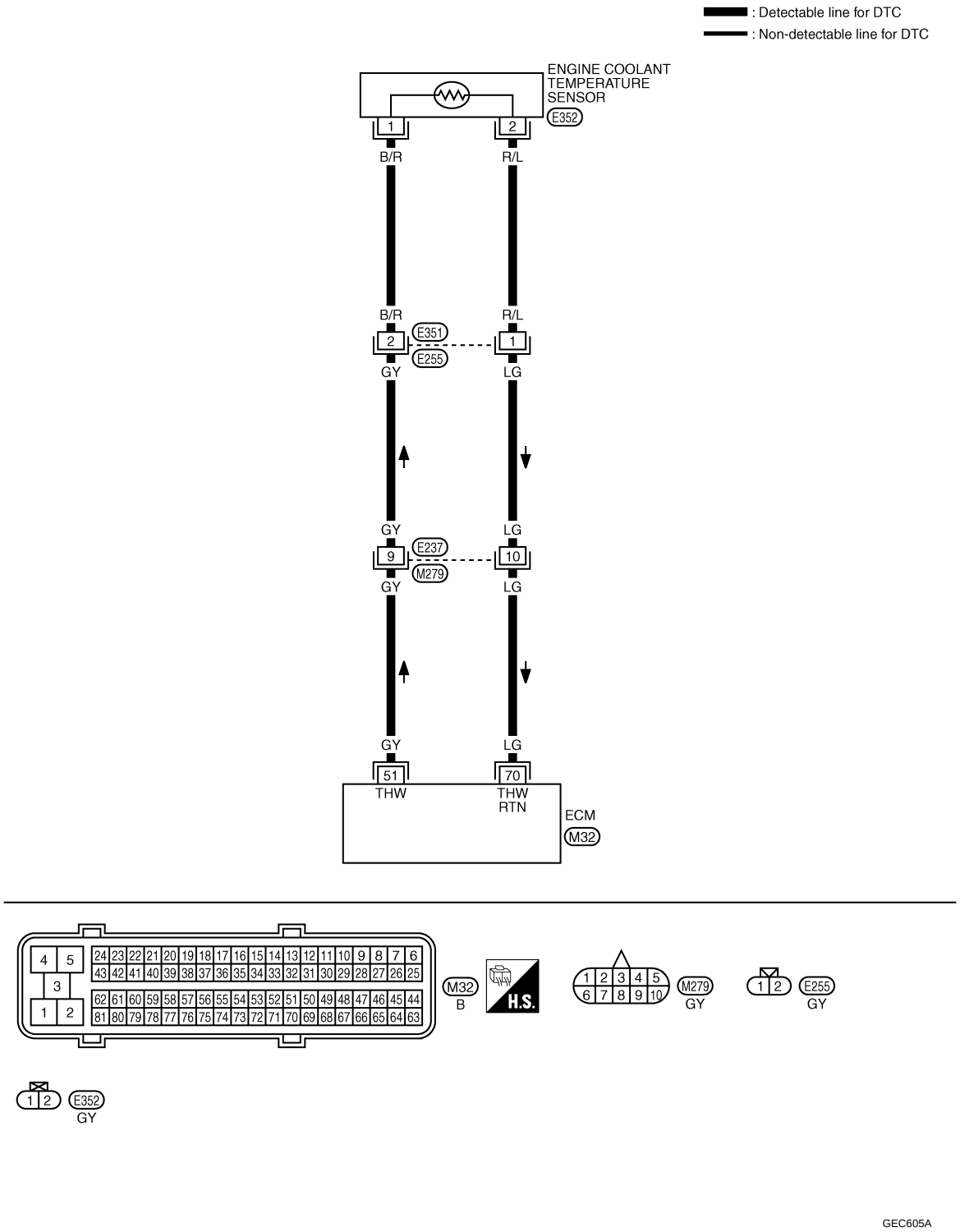

Diagnosis Procedure

INFOID:0000000003759395

1. CHECK GROUND CONNECTIONS

1. Turn ignition switch OFF.

2. Loosen and retighten ground screws on the body.
   Refer to EC-81, "Ground Inspection".
- Body ground M97 (1)
- Body ground M99 (2)
- ECM (3)

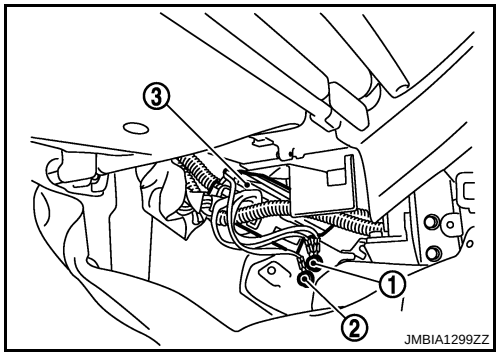

OK or NG

OK >> GO TO 2.
NG >> Repair or replace ground connections.

2. CHECK ECT SENSOR POWER SUPPLY CIRCUIT

1. Disconnect engine coolant temperature (ECT) sensor (1) harness connector.

   ⇦ : Vehicle front

2. Turn ignition switch ON.

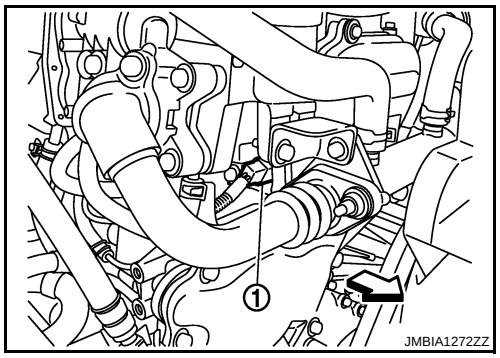

3. Check voltage between ECT sensor terminal 1 and ground with CONSULT-III or tester.

   Voltage: Approximately 5 V

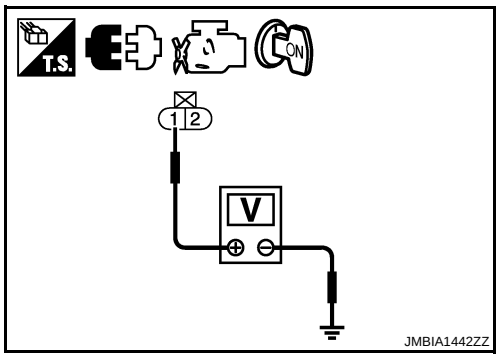

OK or NG

OK >> GO TO 4.
NG >> GO TO 3.

3. DETECT MALFUNCTIONING PART

Check the following.
- Harness connectors E351,E255
- Harness connectors E237,M279
- Harness for open or short between ECT sensor and ECM

>> Repair open circuit or short to ground or short to power in harness or connectors.

4. CHECK ECT SENSOR GROUND CIRCUIT FOR OPEN AND SHORT

1. Turn ignition switch OFF.
2. Disconnect ECM harness connector.
3. Check harness continuity between ECT sensor terminal 2 and ECM terminal 70.
   Refer to Wiring Diagram.

   Continuity should exist.

4. Also check harness for short to ground and short to power.

OK or NG

OK >> GO TO 6.
NG >> GO TO 5.

5. DETECT MALFUNCTIONING PART

Check the following.
- Harness connectors E351,E255
- Harness connectors E237,M279
- Harness for open or short between ECT sensor and ECM

>> Repair open circuit or short to ground or short to power in harness or connectors.

6. CHECK ENGINE COOLANT TEMPERATURE SENSOR

Refer to EC-118, "Component Inspection".

OK or NG

OK >> GO TO 7.
NG >> Replace engine coolant temperature sensor.

7. CHECK INTERMITTENT INCIDENT

Refer to EC-70.

>> **INSPECTION END**

Component Inspection

INFOID:0000000003759396

ENGINE COOLANT TEMPERATURE SENSOR

1. Check resistance between engine coolant temperature sensor terminals 1 and 2 as shown in the figure.

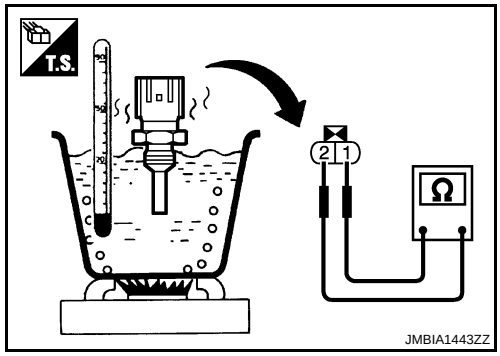

Engine coolant temperature [°C (°F)]	Resistance (kΩ)
20 (68)	2.1 - 2.9
50 (122)	0.68 - 1.00
90 (194)	0.236 - 0.260

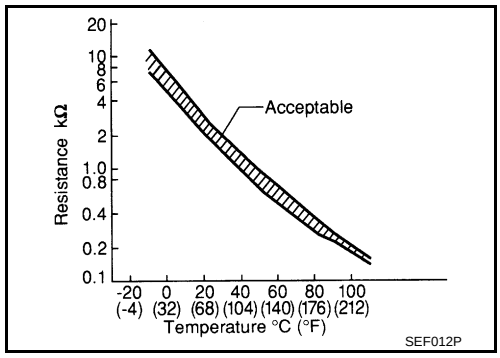

2. If NG, replace engine coolant temperature sensor.

Removal and Installation

INFOID:0000000003759397

ENGINE COOLANT TEMPERATURE SENSOR

Refer to “CYLINDER HEAD” in EM section.

DTC P0122, P0123 APP SENSOR

Description

INFOID:0000000003759398

The accelerator pedal position sensor is installed on the upper end of the accelerator pedal assembly. The sensors detect the accelerator pedal position and sends a signal to the ECM. The ECM uses the signal to determine the amount of fuel to be injected.

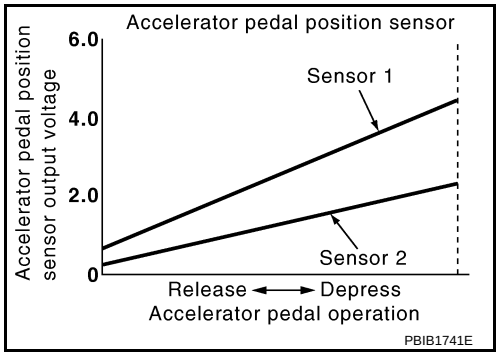

CONSULT-III Reference Value in Data Monitor Mode

INFOID:0000000003759399

Specification data are reference values.

MONITOR ITEM	CONDITION		SPECIFICATION
ACCEL POS SEN*	• Ignition switch: ON (Engine stopped)	Accelerator pedal: Fully released	0.5 - 1.0 V
		Accelerator pedal: Fully depressed	4.0 - 4.8 V
ACCEL SEN 2*	• Ignition switch: ON (Engine stopped)	Accelerator pedal: Fully released	0.3 - 1.2 V
		Accelerator pedal: Fully depressed	3.7 - 4.8 V

*: This signal is converted by ECM internally. Thus, this differs from ECM terminals voltage.

On Board Diagnosis Logic

INFOID:0000000003759400

These self-diagnoses have the one trip detection logic.
MI will not light up for these self-diagnoses.
NOTE:
If DTC P0122 or P0123 is displayed with DTC P0642 or P0643, first perform trouble diagnosis for DTC P0642 or P0643. Refer to EC-210.

DTC No.	Trouble diagnosis name	DTC detecting condition	Possible cause
P0122 0122	Accelerator pedal position sensor 1 circuit low input	An excessively low voltage from the APP sensor 1 is sent to ECM.	• Harness or connectors (The APP sensor 1 circuit is open or shorted.) • Accelerator pedal position sensor (Accelerator pedal position sensor 1)
P0123 0123	Accelerator pedal position sensor 1 circuit high input	An excessively high voltage from the APP sensor 1 is sent to ECM.	

DTC Confirmation Procedure

INFOID:0000000003759401

NOTE:
If DTC Confirmation Procedure has been previously conducted, always turn ignition switch OFF and wait at least 10 seconds before conducting the next test.

1. Turn ignition switch ON.
2. Wait at least 5 seconds.
3. Check DTC.
4. If DTC is detected, go to EC-121, "Diagnosis Procedure".

Wiring Diagram

INFOID:0000000003759402

EC-APPS1-01

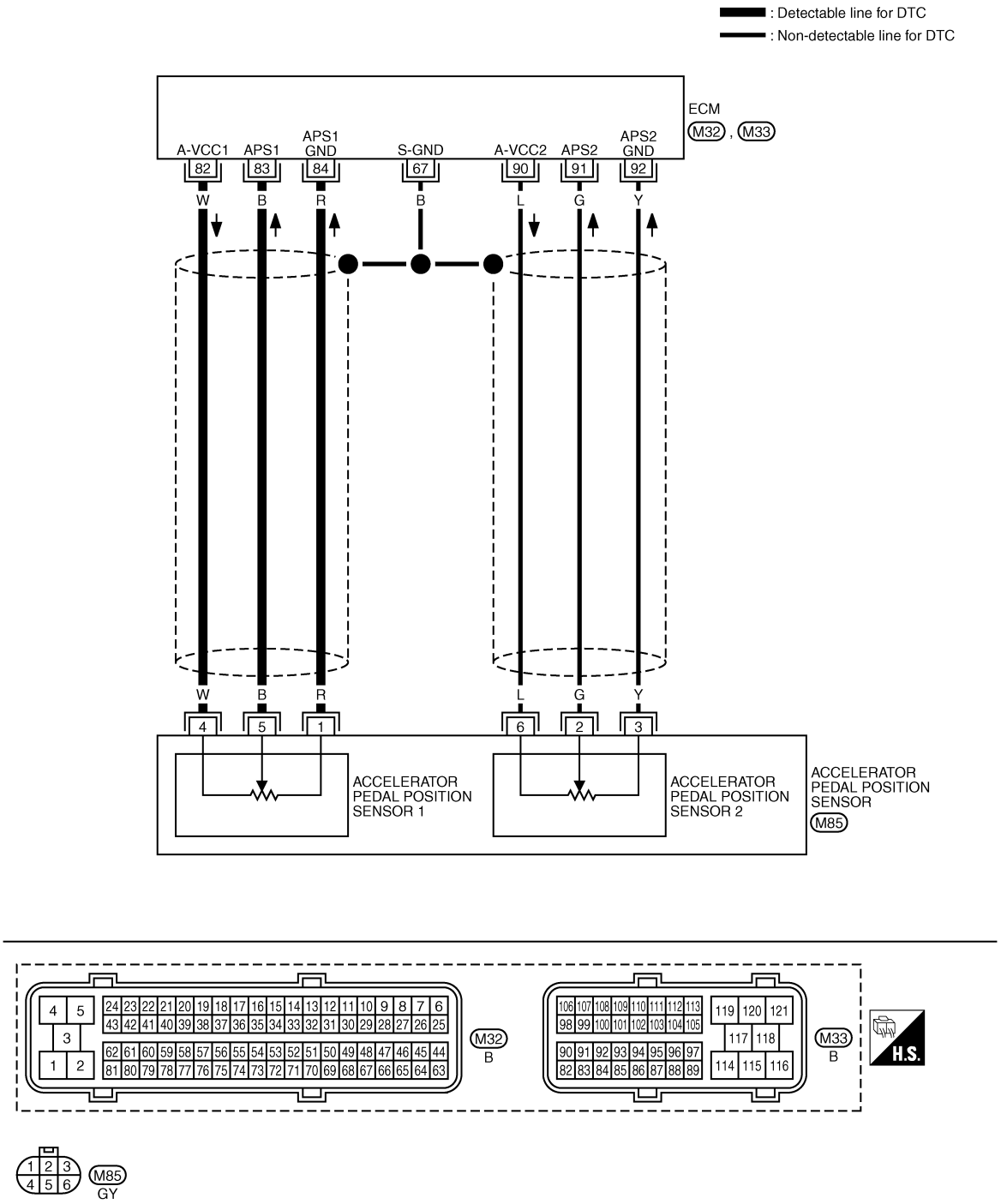

Specification data are reference values and are measured between each terminal and ground.

TERMINAL NO. (Wire color)		Description	Condition	Value (Approx.)
+	–	Signal name		
67 (B)	—	Sensor ground (Sensor shield circuit)	—	—
82 (W)	84 (R)	Sensor power supply (Accelerator pedal position sensor 1 / Crankshaft position sensor / EGR volume control valve control position sensor)	**[Ignition switch ON]**	Approximately 5 V
83 (B)	84 (R)	Accelerator pedal position sensor 1	**[Ignition switch ON]** • Engine: Stopped • Accelerator pedal: Fully released	0.5 - 1.0 V
			[Ignition switch ON] • Engine: Stopped • Accelerator pedal: Fully depressed	3.7 - 4.7 V
84 (R)	—	Accelerator pedal position sensor 1 ground	—	—
90 (L)	92 (Y)	Accelerator pedal position sensor 2 power supply	**[Ignition switch ON]**	Approximately 5 V
91 (G)	92 (Y)	Accelerator pedal position sensor 2	**[Ignition switch ON]** • Engine: Stopped • Accelerator pedal: Fully released	0.15 - 0.6 V
			[Ignition switch ON] • Engine: Stopped • Accelerator pedal: Fully depressed	1.85 - 2.4 V
92 (Y)	—	Accelerator pedal position sensor 2 ground	—	—

★: Average voltage for pulse signal (Actual pulse signal can be confirmed by oscilloscope.)

Diagnosis Procedure

INFOID:0000000003759403

1. CHECK GROUND CONNECTIONS

1. Turn ignition switch OFF.
2. Loosen and retighten ground screws on the body.
   Refer to EC-81, "Ground Inspection".

- Body ground M97 (1)
- Body ground M99 (2)
- ECM (3)

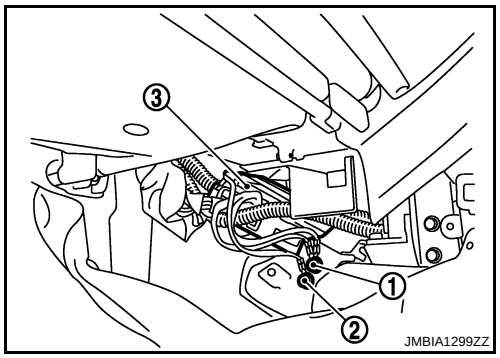

OK or NG

OK >> GO TO 2.
NG >> Repair or replace ground connections.

2. CHECK APP SENSOR 1 POWER SUPPLY CIRCUIT

1. Disconnect accelerator pedal position (APP) sensor (1) harness connector.
2. Turn ignition switch ON.

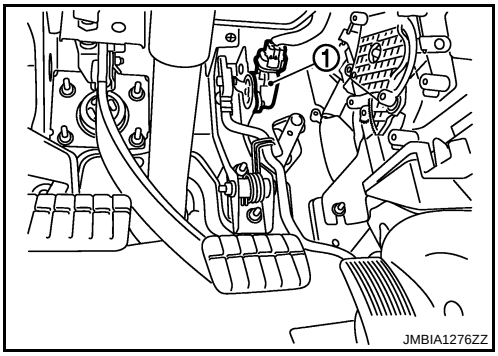

3. Check voltage between APP sensor terminal 4 and ground with CONSULT-III or tester.

Voltage: Approximately 5 V

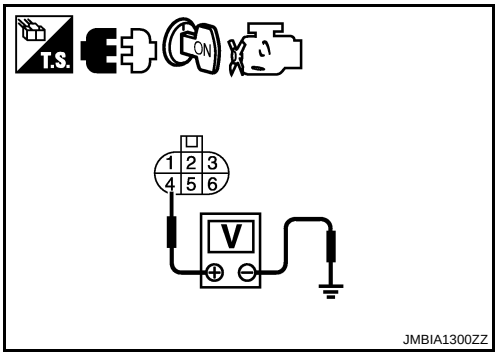

OK or NG

OK >> GO TO 3.
NG >> Repair open circuit or short to ground or short to power in harness or connectors.

3. CHECK APP SENSOR 1 GROUND CIRCUIT FOR OPEN AND SHORT

1. Turn ignition switch OFF.
2. Disconnect ECM harness connector.
3. Check harness continuity between APP sensor terminal 1 and ECM terminal 84.
   Refer to Wiring Diagram.

Continuity should exist.

4. Also check harness for short to ground and short to power.

OK or NG

OK >> GO TO 4.
NG >> Repair open circuit or short to ground or short to power in harness or connectors.

4. CHECK APP SENSOR 1 INPUT SIGNAL CIRCUIT FOR OPEN AND SHORT

1. Check harness continuity between APP sensor terminal 5 and ECM terminal 83.
   Refer to Wiring Diagram.

Continuity should exist.

2. Also check harness for short to ground and short to power.

OK or NG

OK >> GO TO 5.
NG >> Repair open circuit or short to ground or short to power in harness or connectors.

5. CHECK APP SENSOR

Refer to EC-123, "Component Inspection".

OK or NG

OK >> GO TO 6.
NG >> Replace accelerator pedal assembly.

6. CHECK INTERMITTENT INCIDENT

Refer to EC-70.

>> **INSPECTION END**

Component Inspection

INFOID:0000000003759404

ACCELERATOR PEDAL POSITION SENSOR

1. Reconnect all harness connectors disconnected.
2. Turn ignition switch ON.
3. Check voltage between ECM harness connector terminal as follows.

ECM			Condition		Voltage
+		–			
Connector	Terminal	Terminal			
M33	83 (APP sensor 1 signal)	84 (Sensor ground)	Accelerator pedal	Fully released	0.5 - 1.0 V
				Fully depressed	3.7 - 4.7 V
	91 (APP sensor 2 signal)	92 (Sensor ground)	Accelerator pedal	Fully released	0.15 - 0.6 V
				Fully depressed	1.85 - 2.4 V

4. If NG, replace accelerator pedal assembly.

Removal and Installation

INFOID:0000000003759405

ACCELERATOR PEDAL

Refer to “ACCELERATOR CONTROL SYSTEM” in FE section.

DTC P0182, P0183 FUEL PUMP TEMPERATURE SENSOR

Description

INFOID:0000000003759442

Fuel pump temperature sensor (1) is built in the fuel pump (2). The sensor detects the fuel temperature in the fuel pump and calibrates the fuel injection amount change by fuel temperature.

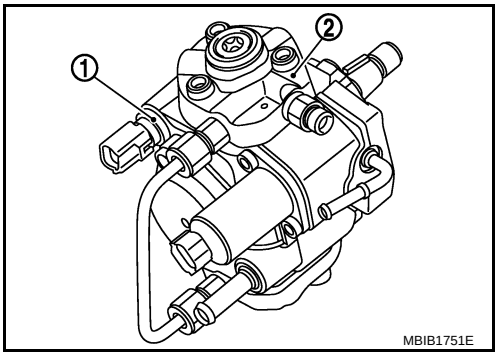

CONSULT-III Reference Value in Data Monitor Mode

INFOID:0000000003759443

Specification data are reference values.

MONITOR ITEM	CONDITION	SPECIFICATION
FUEL TEMP SEN	• Engine: After warming up	More than 40°C (104°F)

On Board Diagnosis Logic

INFOID:0000000003759444

DTC No.	Trouble diagnosis name	DTC detecting condition	Possible cause
P0182 0182	Fuel pump temperature sensor circuit low input	An excessively low voltage from the sensor is sent to ECM.	• Harness or connectors (The sensor circuit is open or short-ed.) • Fuel pump temperature sensor
P0183 0183	Fuel pump temperature sensor circuit high input	An excessively high voltage from the sensor is sent to ECM.	

DTC Confirmation Procedure

INFOID:0000000003759445

NOTE:
If DTC Confirmation Procedure has been previously conducted, always turn ignition switch OFF and wait at least 10 seconds before conducting the next test.

1. Turn ignition switch ON.
2. Wait at least 5 seconds.
3. Check 1st trip DTC.
4. If 1st trip DTC is detected, go to EC-125, "Diagnosis Procedure".

Wiring Diagram

INFOID:0000000003759446

EC-FTS-01

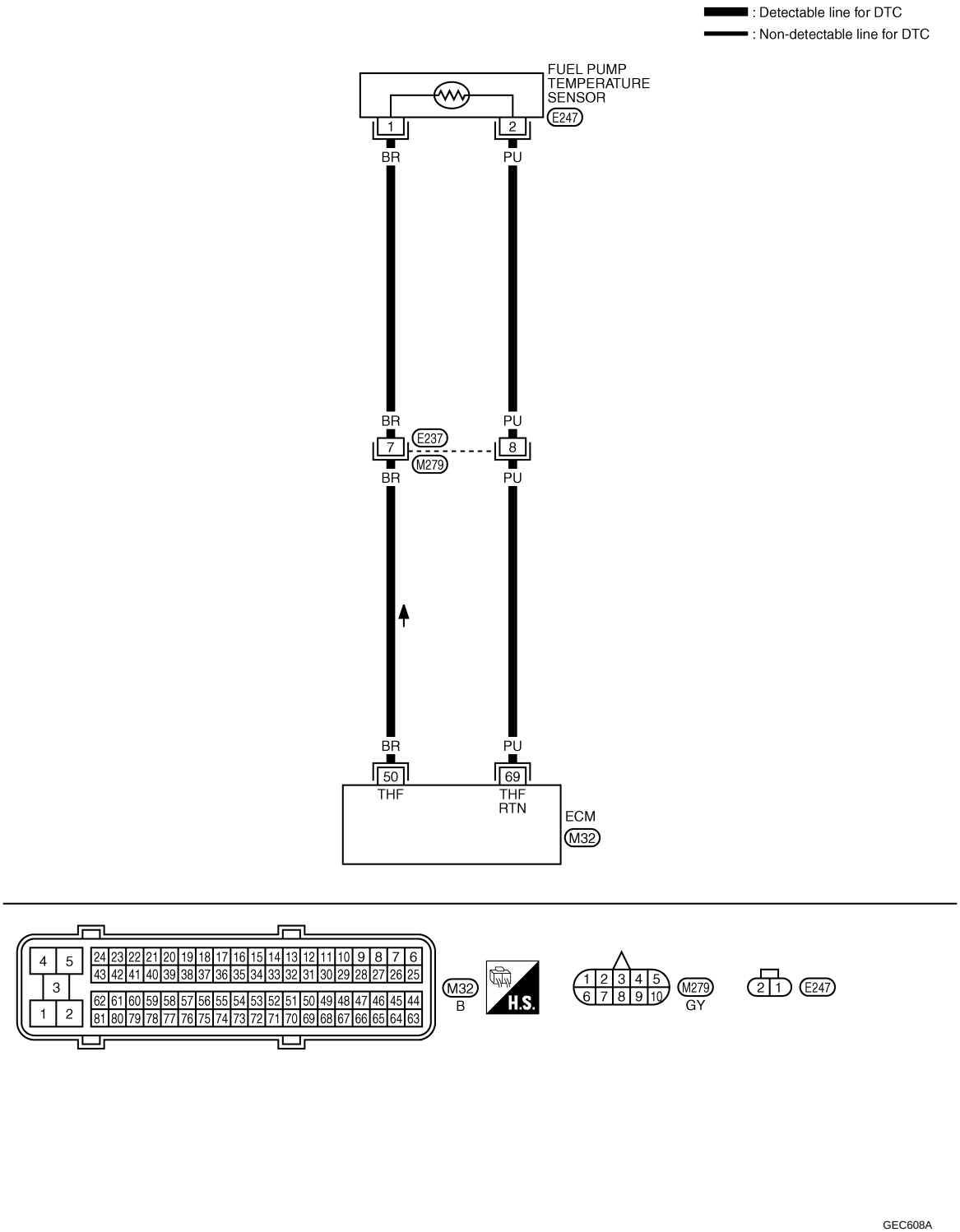

Diagnosis Procedure

INFOID:0000000003759448

1. CHECK GROUND CONNECTIONS

1. Turn ignition switch OFF.

2. Loosen and retighten ground screws on the body.
   Refer to EC-81, "Ground Inspection".
- Body ground M97 (1)
- Body ground M99 (2)
- ECM (3)

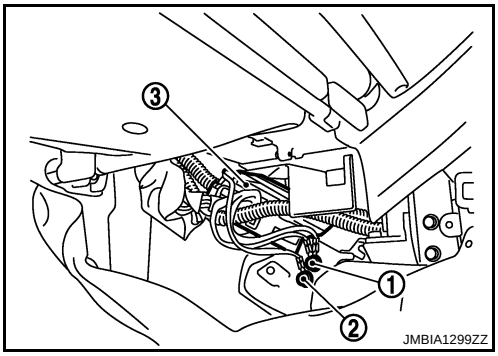

OK or NG

OK >> GO TO 2.
NG >> Repair or replace ground connections.

2. CHECK FUEL PUMP TEMPERATURE SENSOR POWER SUPPLY CIRCUIT

1. Disconnect fuel pump temperature sensor (1) harness connector.
- Fuel pump (2)
2. Turn ignition switch ON.

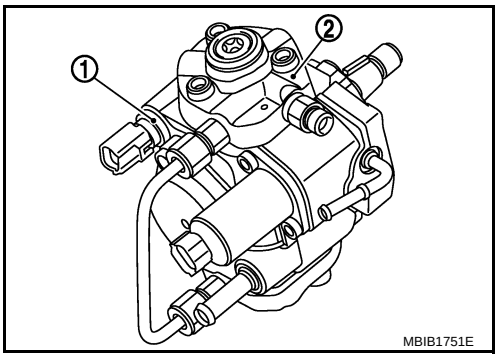

3. Check voltage between fuel pump temperature sensor terminal 1 and ground with CONSULT-III or tester.

Voltage: Approximately 5V

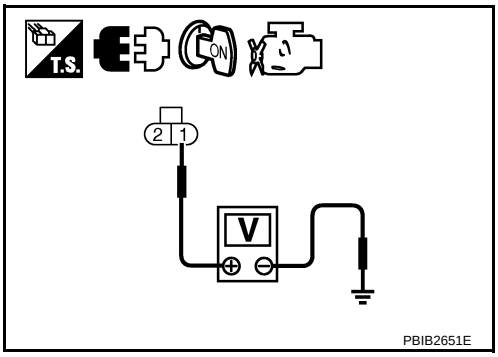

OK or NG

OK >> GO TO 4.
NG >> GO TO 3.

3. DETECT MALFUNCTIONING PART

Check the following
- Harness connectors E237, M279
- Harness for open or short between fuel pump temperature sensor and ECM

>> Repair open circuit or short to ground or short to power in harness or connectors.

4. CHECK FUEL PUMP TEMPERATURE SENSOR GROUND CIRCUIT FOR OPEN AND SHORT

1. Turn ignition switch OFF.
2. Disconnect ECM harness connector.
3. Check harness continuity between fuel pump temperature sensor terminal 2 and ECM terminal 69.
   Refer to Wiring Diagram.

Continuity should exist.

4. Also check harness for short to ground and short to power.

OK or NG

OK >> GO TO 6.
NG >> GO TO 5.

5. DETECT MALFUNCTIONING PART

Check the following

- Harness connectors E237, M279
- Harness for open or short between fuel pump temperature sensor and ECM

>> Repair open circuit or short to ground or short to power in harness or connectors.

6. CHECK INTERMITTENT INCIDENT

Refer to EC-70.

OK or NG

OK >> GO TO 7.
NG >> Repair or replace.

7. REPLACE FUEL PUMP

1. Replace fuel pump.
2. Perform Fuel Pump Learning Value Clearing. Refer to EC-23, "Fuel Pump Learning Value Clearing".

>> **INSPECTION END**

Removal and Installation

INFOID:0000000003759449

FUEL PUMP

Refer to EC-24, "FUEL PUMP".

DTC P0192, P0193 FRP SENSOR

Description

INFOID:0000000003759450

The fuel rail pressure (FRP) sensor (2) is placed to the fuel rail. It measures the fuel pressure in the fuel rail. The sensor sends voltage signal to the ECM. As the pressure increases, the voltage rises.
The ECM controls the fuel pressure in the fuel rail by the inlet throttling device. The ECM uses the signal from fuel rail pressure sensor as a feedback signal.

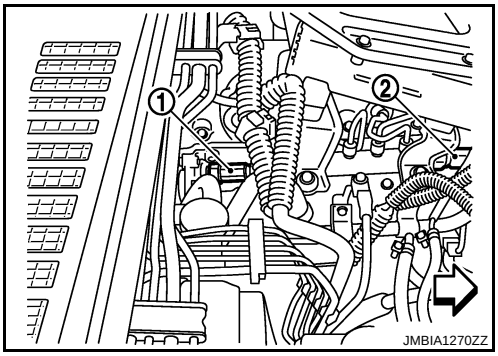

⇦ : Vehicle front

- Fuel rail pressure relief valve (1)

CONSULT-III Reference Value in Data Monitor Mode

INFOID:0000000003759451

Specification data are reference values.

MONITOR	CONDITION		SPECIFICATION
ACT CR PRESS	• Engine: After warming up • Air conditioner switch: OFF • Shift lever: Neutral • No load	Idle	25 - 35 MPa
		2,000 rpm	40 - 50 MPa

On Board Diagnosis Logic

INFOID:0000000003759452

NOTE:
If DTC P0192 or P0193 is displayed with DTC P0652 or P0653, first perform trouble diagnosis for DTC P0652 or P0653. Refer to EC-214.

DTC No.	Trouble diagnosis name	DTC detecting condition	Possible cause
P0192 0192	Fuel rail pressure sensor circuit low input	An excessively low voltage from the sensor is sent to ECM.	• Harness or connectors (The sensor circuit is open or shorted.) • Fuel rail temperature sensor
P0193 0193	Fuel rail temperature sensor circuit high input	An excessively high voltage from the sensor is sent to ECM.	

DTC Confirmation Procedure

INFOID:0000000003759453

NOTE:
If DTC Confirmation Procedure has been previously conducted, always turn ignition switch OFF and wait at least 10 seconds before conducting the next test.

1. Turn ignition switch ON.
2. Wait at least 5 seconds.
3. Check 1st trip DTC.
4. If 1st trip DTC is detected, go to EC-130, "Diagnosis Procedure".

Wiring Diagram

INFOID:0000000003759454

EC-FRPS-01

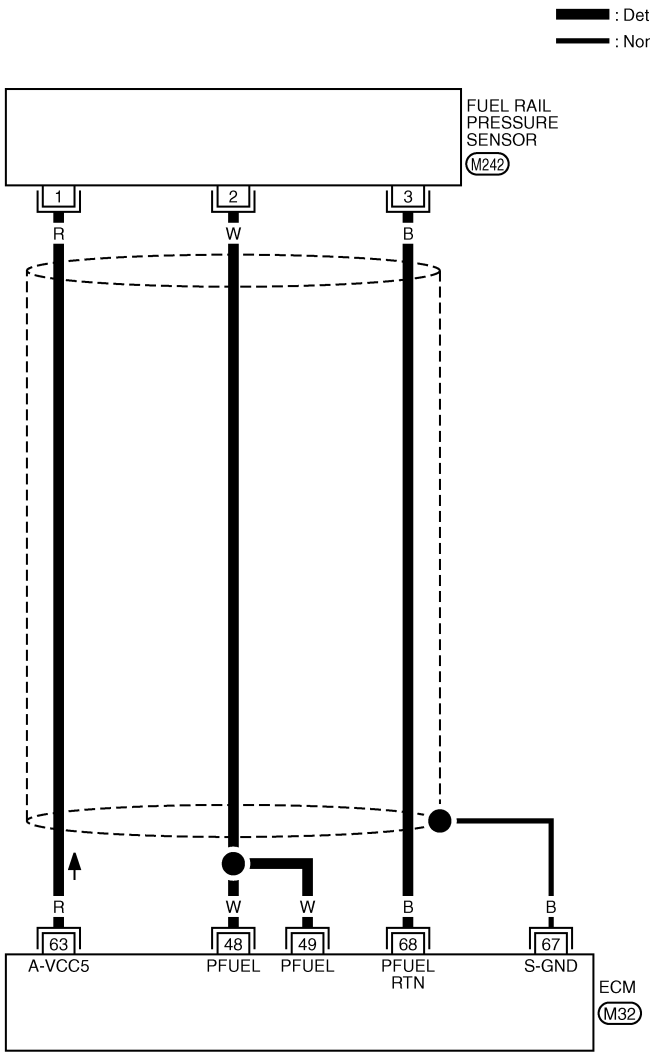

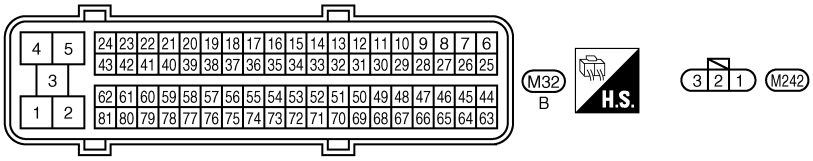

GEC609A

Specification data are reference values and are measured between each terminal and ground.

TERMINAL NO. (Wire color)		Description	Condition	Value (Approx.)
+	–	Signal name		
48 (W) 49 (W)	68 (B)	Fuel rail pressure sensor	**[Engine is running]** • **Warm-up condition** • Idle speed	1.4 - 1.7 V
			[Engine is running] • **Warm-up condition** • Engine speed: 2,000 rpm	1.7 - 2.0 V
63 (R)	68 (B)	Fuel rail pressure sensor power supply	**[Ignition switch ON]**	Approximately 5 V
67 (B)	—	Sensor ground (Sensor shield circuit)	—	—
68 (B)	—	Fuel rail pressure sensor ground	—	—

Diagnosis Procedure

INFOID:0000000003759455

1. CHECK GROUND CONNECTIONS

1. Turn ignition switch OFF.
2. Loosen and retighten ground screws on the body.
   Refer to EC-81, "Ground Inspection".

- Body ground M97 (1)
- Body ground M99 (2)
- ECM (3)

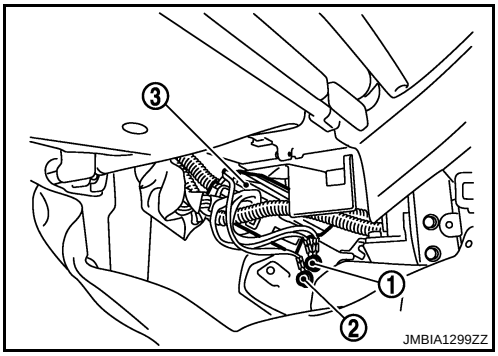

OK or NG

OK >> GO TO 2.
NG >> Repair or replace ground connections.

2. CHECK FUEL RAIL PRESSURE SENSOR POWER SUPPLY CIRCUIT

1. Disconnect fuel rail pressure sensor (2) harness connector.

-

⇦ : Vehicle front

Fuel rail pressure relief valve (1)

2. Turn ignition switch ON.

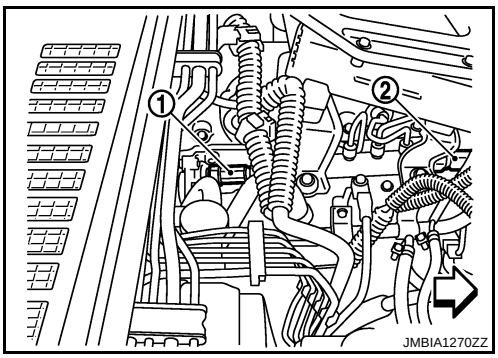

3. Check voltage between fuel rail pressure sensor terminal 1 and ground with CONSULT-III or tester.

Voltage: Approximately 5 V

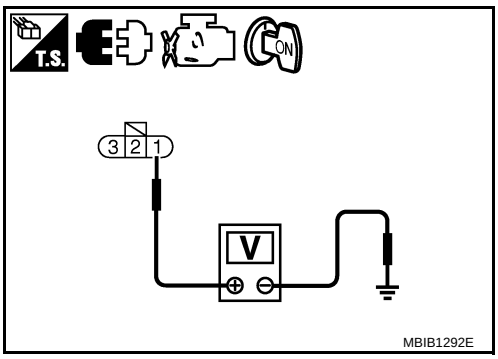

OK or NG

OK >> GO TO 3.
NG >> Repair open circuit or short to ground or short to power in harness or connectors.

3. CHECK FUEL RAIL PRESSURE SENSOR GROUND CIRCUIT FOR OPEN AND SHORT

1. Turn ignition switch OFF.
2. Disconnect ECM harness connector.
3. Check harness continuity between fuel rail pressure sensor terminal 3 and ECM terminal 68. Refer to Wiring Diagram.

Continuity should exist.

4. Also check harness for short to ground and short to power.

OK or NG

OK >> GO TO 4.
NG >> Repair open circuit or short to ground or short to power in harness or connectors.

4. CHECK FUEL RAIL PRESSURE SENSOR INPUT SIGNAL CIRCUIT FOR OPEN AND SHORT

1. Check harness continuity between ECM terminals 48, 49 and fuel rail pressure sensor terminal 2. Refer to Wiring Diagram.

Continuity should exist.

2. Also check harness for short to ground and short to power.

OK or NG

OK >> GO TO 5.
NG >> Repair open circuit or short to ground or short to power in harness connectors.

5. CHECK FUEL RAIL PRESSURE SENSOR

Refer to EC-131, "Component Inspection".

OK or NG

OK >> GO TO 6.
NG >> Replace fuel rail.

6. CHECK INTERMITTENT INCIDENT

Refer to EC-70.

>> **INSPECTION END**

Component Inspection

INFOID:0000000003759456

FUEL RAIL PRESSURE SENSOR

1. Reconnect harness connector disconnected.
2. Start engine and warm it up to normal operating temperature.
3. Check voltage between ECM harness connector terminals as follows.

ECM			Condition	Voltage
+		–		
Connector	Terminal	Terminal		
M32	48	68	Idle	1.4 - 1.7 V
	49		2,000 rpm	1.7- 2.0 V

4. If the voltage is out of specification, disconnect fuel rail pressure sensor harness connector and connect it again. Then repeat above check.
5. If NG, replace fuel rail.

Removal and Installation

INFOID:0000000003759457

FUEL RAIL

Refer to EM-8.

DTC P0200 FUEL INJECTOR

On Board Diagnosis Logic

INFOID:0000000003759458

DTC No.	Trouble diagnosis name	DTC detecting condition	Possible cause
P0200 0200	Fuel injector power supply circuit	ECM detects a voltage of power source for the fuel injector is excessively high or low.	• ECM

DTC Confirmation Procedure

INFOID:0000000003759459

NOTE:
If DTC Confirmation Procedure has been previously conducted, always turn ignition switch OFF and wait at least 10 seconds before conducting the next test.

1. Start engine and let it idle for at least 5 seconds.
2. Check 1st trip DTC.
3. If 1st trip DTC is detected, go to EC-132, "Diagnosis Procedure".

Diagnosis Procedure

INFOID:0000000003759460

1. INSPECTION START

With CONSULT-III

1. Turn ignition switch ON.
2. Select “SELF DIAG RESULTS” mode with CONSULT-III.
3. Touch “ERASE”.
4. Perform EC-132, "DTC Confirmation Procedure", again.
5. Is 1st trip DTC P0200 displayed again?

With GST

1. Turn ignition switch ON.
2. Select Service $04 with GST.
3. Perform EC-132, "DTC Confirmation Procedure", again.
4. Is 1st trip DTC P0200 displayed again?

Yes or No

Yes >> GO TO 2.
No >> **INSPECTION END**

2. REPLACE ECM

1. Replace ECM.
2. Perform initialization of NATS system and registration of all NATS ignition key IDs. Refer to EL-96, "ECM Re-communicating Function".
3. Perform Injector Adjustment Value Registration. Refer to EC-22, "Injector Adjustment Value Registration".
4. Perform Fuel Pump Learning Value Clearing. Refer to EC-23, "Fuel Pump Learning Value Clearing".
5. Perform EGR Volume Control Valve Closed Position Learning Value Clear. Refer to EC-24, "EGR Volume Control Valve Closed Position Learning Value Clear".
6. Perform EGR Volume Control Valve Closed Position Learning. Refer to EC-24, "EGR Volume Control Valve Closed Position Learning".

>> **INSPECTION END**

DTC P0201 - P0204 FUEL INJECTOR

Component Description

INFOID:0000000003759461

The fuel injector is a small, precise solenoid valve. When the ECM supplies a ground to the fuel injector circuit, the coil in the fuel injector is energized. The energized coil pulls the needle valve back and allows fuel to flow through the fuel injector into the cylinder. The amount of fuel injected depends upon the injection pulse duration. Pulse duration is the length of time the fuel injector remains open. The ECM controls the injection pulse duration based on engine fuel needs.

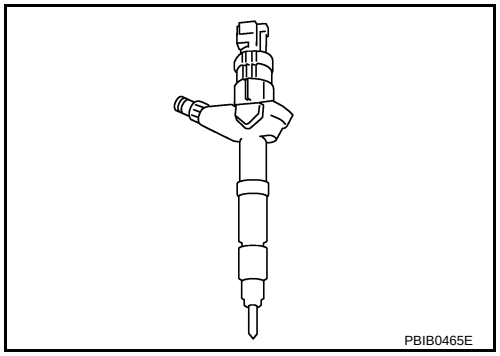

CONSULT-III Reference Value in Data Monitor Mode

INFOID:0000000003759462

Specification data are reference values.

MONITOR ITEM	CONDITION		SPECIFICATION
MAIN INJ WID	• Engine: After warming up • Shift lever: Neutral position • Idle speed	No load	0.68 - 0.78 msec
		Blower fan switch: ON	0.78 - 0.88 msec

On Board Diagnosis Logic

INFOID:0000000003759463

DTC No.	Trouble diagnosis name	DTC detecting condition	Possible cause
P0201 0201	No. 1 cylinder fuel injector circuit open	An improper voltage signal is sent to ECM through No. 1 cylinder fuel injector.	• Harness or connectors (The fuel injector circuit is open.) • Fuel injector
P0202 0202	No. 2 cylinder fuel injector circuit open	An improper voltage signal is sent to ECM through No. 2 cylinder fuel injector.	
P0203 0203	No. 3 cylinder fuel injector circuit open	An improper voltage signal is sent to ECM through No. 3 cylinder fuel injector.	
P0204 0204	No. 4 cylinder fuel injector circuit open	An improper voltage signal is sent to ECM through No. 4 cylinder fuel injector.	

DTC Confirmation Procedure

INFOID:0000000003759464

NOTE:
If DTC Confirmation Procedure has been previously conducted, always turn ignition switch OFF and wait at least 10 seconds before conducting the next test.

TESTING CONDITION
Before performing the following procedure, confirm the ambient temperature is more than -20°C (-4°F).

1. Start engine and let it idle for at least 5 seconds.
2. Check 1st trip DTC.
3. If 1st trip DTC is detected, go to EC-136, "Diagnosis Procedure".

Wiring Diagram

INFOID:0000000003759465

EC-INJECT-01

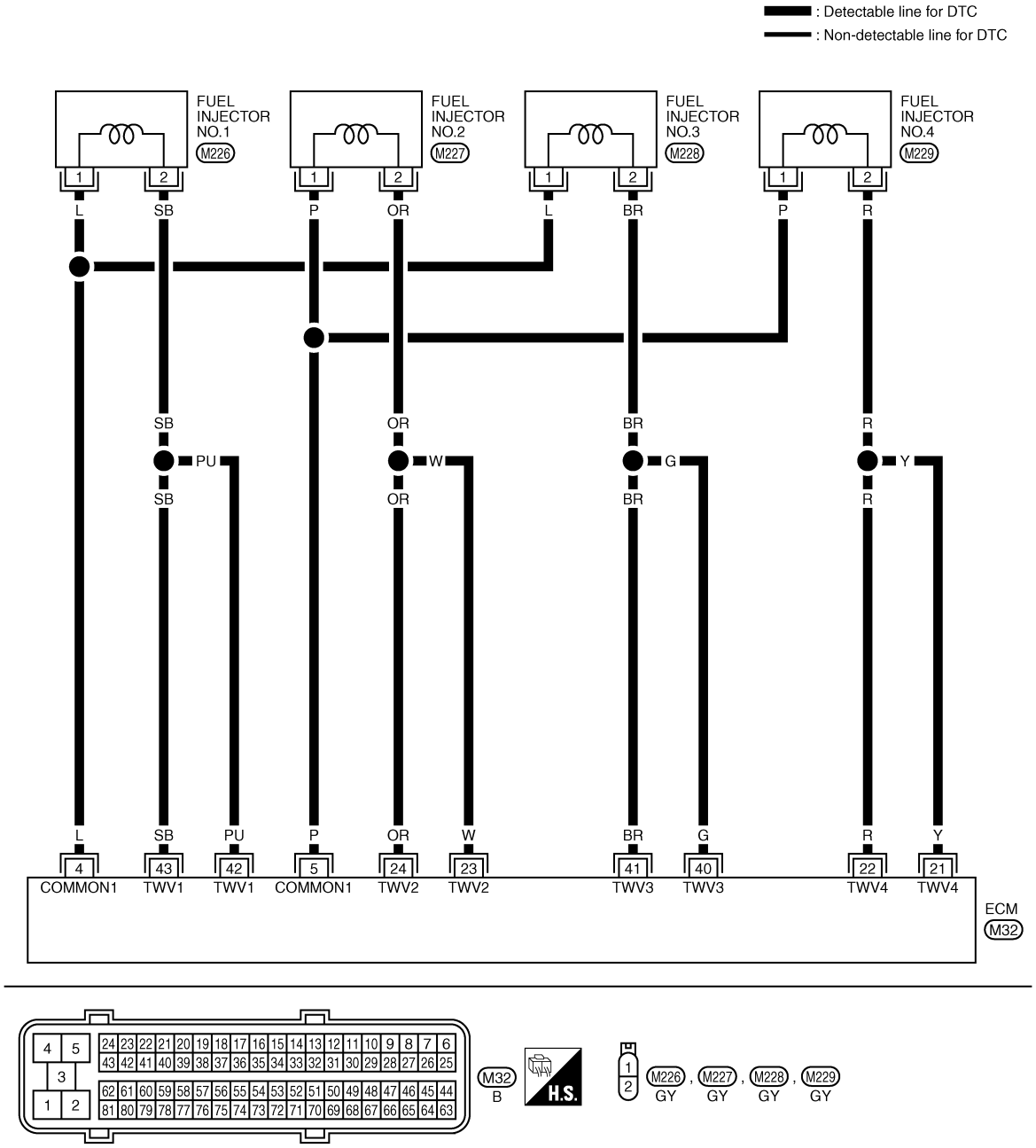

GEC610A

Specification data are reference values and are measured between each terminal and ground.
Pulse signal is measured by CONSULT-III.

TERMINAL NO. (Wire color)		Description	Condition	Value (Approx.)
+	–	Signal name		
4 (L)	114 (B)	Fuel injector power supply (For cylinder No. 1 and 3)	**[Engine is running]** • **Warm-up condition** • Idle speed **NOTE:** The pulse cycle changes depending on rpm at idle	Approximately 7.5 V ★ 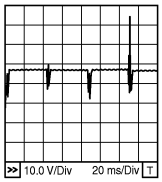 MBIB1295E
5 (P)		Fuel injector power supply (For cylinder No. 2 and 4)	**[Engine is running]** • **Warm-up condition** • Engine speed: 2,000 rpm	Approximately 8.0 V ★ 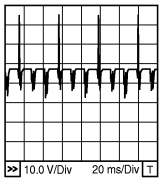 MBIB1296E
21 (Y)	114 (B)	Fuel injector No. 4	**[Engine is running]** • **Warm-up condition** • Idle speed **NOTE:** The pulse cycle changes depending on rpm at idle	Approximately 7.5 V ★ 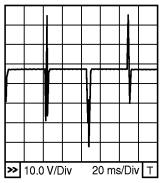 MBIB1297E
22 (R)		Fuel injector No. 4		
23 (W)		Fuel injector No. 2	**[Engine is running]** • **Warm-up condition** • Engine speed: 2,000 rpm	Approximately 8.0 V ★ 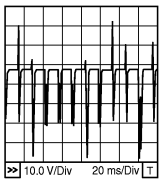 MBIB1298E
24 (OR)		Fuel injector No. 2		
40 (G)	114 (B)	Fuel injector No. 3	**[Engine is running]** • **Warm-up condition** • Idle speed **NOTE:** The pulse cycle changes depending on rpm at idle	Approximately 7.5 V ★ 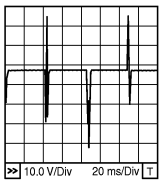 MBIB1297E
41 (BR)		Fuel injector No. 3		
42 (PU)		Fuel injector No. 1	**[Engine is running]** • **Warm-up condition** • Engine speed: 2,000 rpm	Approximately 8.0 V ★ 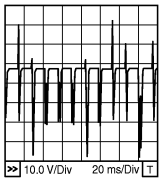 MBIB1298E
43 (SB)		Fuel injector No. 1		

★: Average voltage for pulse signal (Actual pulse signal can be confirmed by oscilloscope.)

Diagnosis Procedure

INFOID:0000000003759467

1. CHECK FUEL INJECTOR POWER SUPPLY CIRCUIT FOR OPEN

1. Turn ignition switch OFF.
2. Disconnect fuel injector (1) harness connector.

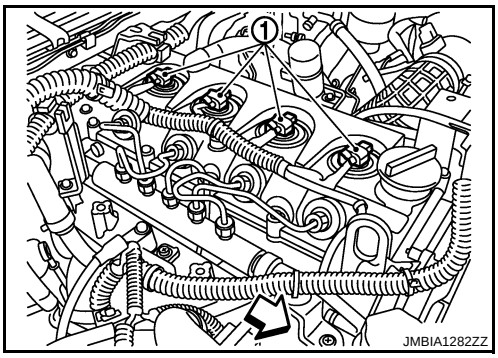

⇦ : Vehicle front

3. Disconnect ECM harness connector.
4. Check harness continuity between the following terminals corresponding to the malfunctioning cylinder.
   Refer to Wiring Diagram.

DTC	Terminal		Cylinder
	ECM	Fuel injector	
P0201	4	1	No.1
P0202	5	1	No.2
P0203	4	1	No.3
P0204	5	1	No.4

Continuity should exist.

OK or NG

OK >> GO TO 2.
NG >> Repair open circuit in harness or connectors.

2. CHECK FUEL INJECTOR OUTPUT SIGNAL CIRCUIT FOR OPEN

Check harness continuity between the following terminals corresponding to the malfunctioning cylinder. Refer to Wiring Diagram.

DTC	Terminal		Cylinder
	ECM	Fuel injector	
P0201	42, 43	2	No.1
P0202	23, 24	2	No.2
P0203	40, 41	2	No.3
P0204	21, 22	2	No.4

Continuity should exist.

OK or NG

OK >> GO TO 3.
NG >> Repair open circuit in harness or connectors.

3. CHECK FUEL INJECTOR-I

Refer to EC-137, "Component Inspection".

OK or NG

OK >> GO TO 4.
NG >> GO TO 5.

4. CHECK FUEL INJECTOR-II

With CONSULT-III

1. Remove two fuel injectors.
   NOTE:
   One is from malfunctioning cylinder and the other is from any cylinder other than the malfunctioning cylinder.

2. Swap the two fuel injectors to the other cylinder.
3. Reconnect ECM harness connector and fuel injector harness connectors.
4. Turn ignition switch ON.
5. Perform Injector Adjustment Value Registration. Refer to EC-22, "Injector Adjustment Value Registration".
6. Select “SELF DIAG RESULTS” mode with CONSULT-III.
7. Touch “ERASE”.
8. Perform EC-133, "DTC Confirmation Procedure".
9. Is DTC displayed for the other cylinder?

With GST

1. Remove two fuel injectors.
   NOTE:
   One is from malfunctioning cylinder and the other is from any cylinder other than the malfunctioning cylinder.
2. Swap the two fuel injectors to the other cylinder.
3. Reconnect ECM harness connector and fuel injector harness connector.
4. Turn ignition switch ON.
5. Perform Injector Adjustment Value Registration. Refer to EC-22, "Injector Adjustment Value Registration".
6. Select Service $04 with GST.
7. Perform EC-133, "DTC Confirmation Procedure".
8. Is DTC displayed for the other cylinder?

Yes or No

Yes >> GO TO 5.
No >> GO TO 6.

5. REPLACE FUEL INJECTOR

1. Replace fuel injector of malfunctioning cylinder.
2. Perform Injector Adjustment Value Registration. Refer to EC-22, "Injector Adjustment Value Registration".

>> **INSPECTION END**

6. CHECK INTERMITTENT INCIDENT

Refer to EC-70.

>> **INSPECTION END**

Component Inspection

INFOID:0000000003759468

FUEL INJECTOR

1. Disconnect fuel injector harness connector.
2. Check resistance between terminals as shown in the figure.

Resistance: 0.2 - 0.8 Ω [at 10 - 60°C (50 - 140°F)]

3. If NG, replace fuel injector.

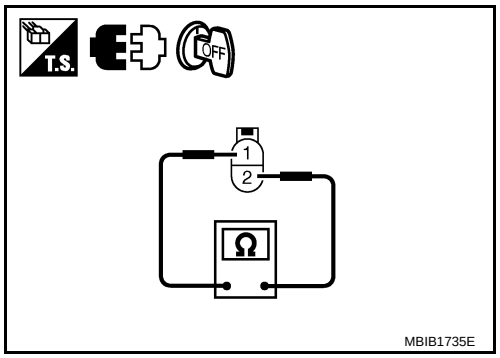

Removal and Installation

INFOID:0000000003759469

FUEL INJECTOR

Refer to EM-8.

DTC P0217 ENGINE OVER TEMPERATURE

Description

INFOID:0000000003759470

SYSTEM DESCRIPTION

NOTE:
If DTC P0217 is displayed with DTC U1000, first perform the trouble diagnosis for DTC U1000. Refer to EC-83.

Cooling Fan Control

Sensor	Input Signal to ECM	ECM function	Actuator
Wheel sensor	Vehicle speed*	Cooling fan control	Cooling fan relay
Engine coolant temperature sensor	Engine coolant temperature		
Air conditioner switch	Air conditioner ON signal*		

*: This signal is sent to ECM through CAN communication line.

The ECM controls the cooling fan corresponding to the vehicle speed, engine coolant temperature, and air conditioner ON signal. The control system has 2-step control [ON/OFF].

Cooling Fan Operation

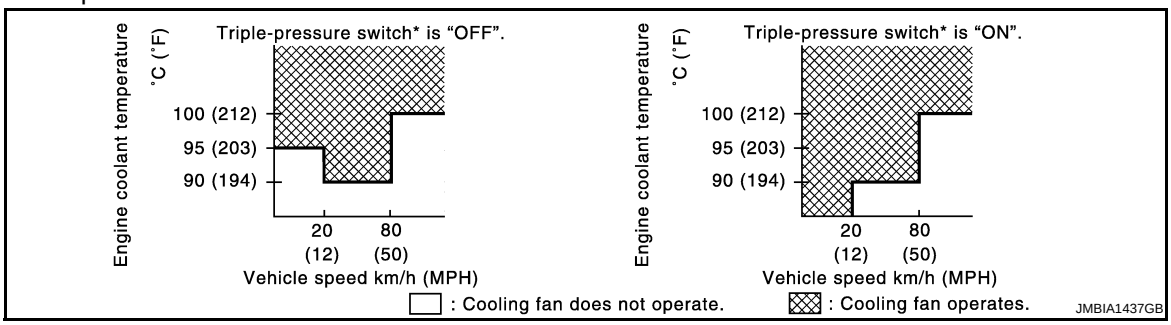

CONSULT-III Reference Value in Data Monitor Mode

INFOID:0000000003759471

Specification data are reference values.

MONITOR ITEM	CONDITION		SPECIFICATION
AIR COND SIG	• Engine: After warming up, idle the engine	Air conditioner switch: OFF	OFF
		Air conditioner switch: ON (Compressor operates)	ON
COOLING FAN*	• When cooling fan is stopped		OFF
	• When cooling fan operate low speed		LOW
	• When cooling fan operate low speed		HI

*: The cooling fan rotation has two stages (OFF and ON) although the display of CONSULT-III has three stages (OFF,LOW and HI).

On Board Diagnosis Logic

INFOID:0000000003759472

This self-diagnosis has the one trip detection logic.
MI will not light up for this self-diagnosis.

If the cooling fan or another component in the cooling system malfunctions, engine coolant temperature will rise.

When the engine coolant temperature reaches an abnormally high temperature condition, a malfunction is indicated.

DTC No.	Trouble diagnosis name	DTC detecting condition	Possible cause
P0217 0217	Engine over temperature (Overheat)	• Cooling fan does not operate properly (Overheat). • Cooling fan system does not operate properly (Overheat). • Engine coolant was not added to the system using the proper filling method. • Engine coolant is not within the specified range.	• Harness or connectors (The cooling fan circuit is open or shorted.) • Cooling fan • Cooling fan (Crankshaft driven) • Radiator hose • Radiator • Radiator cap • Reservoir tank • Water pump • Thermostat For more information, refer to EC-145, "Main 12 Causes of Overheating".

CAUTION:
When a malfunction is indicated, be sure to replace the coolant. Refer to "ENGINE MAINTENANCE" in MA section. Also, replace the engine oil. Refer to "ENGINE MAINTENANCE" in MA section.
1. **Fill radiator with coolant up to specified level with a filling speed of 2 liters per minute. Be sure to use coolant with the proper mixture ratio. Refer to "RECOMMENDE FLUIDS AND LUBRICANTS" in MA section.**
2. **After refilling coolant, run engine to ensure that no water-flow noise is emitted.**

Overall Function Check

INFOID:0000000003759473

Use this procedure to check the overall function of the cooling fan. During this check, a DTC might not be confirmed.

WARNING:
- **Never remove a radiator cap when the engine is hot. Serious burns could be caused by high pressure fluid escaping from the radiator and/or the reservoir tank.**
- **Wrap a thick cloth around cap. Carefully remove the cap by turning it a quarter turn to allow built-up pressure to escape. Then turn the cap all the way off.**

WITH CONSULT-III

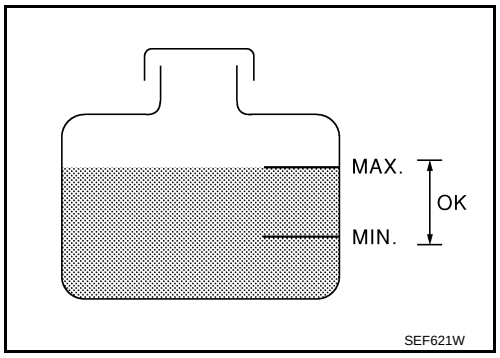

1. Check the coolant level in the reservoir tank and radiator.
   Allow engine to cool before checking coolant level.
   If the coolant level in the reservoir tank and/or radiator is below the proper range, skip the following steps and go to EC-141, "Diagnosis Procedure".
2. Confirm whether customer filled the coolant or not. If customer filled the coolant, skip the following steps and go to EC-141, "Diagnosis Procedure".
3. Start engine and make sure that cooling fan (crankshaft driven) operates normally.
   If NG, refer to "ENGINE COOLING SYSTEM" in LC section.
   If OK, go to the following step.
   Be careful not to overheat engine.
4. Stop engine and turn ignition switch ON.
5. Select "COOLANT TEMP" in "ACTIVE TEST" mode with CONSULT-III.
6. Set "ENG COOLANT TEMP" to 100°C (212°F) by touching "Qu" and "UP" on CONSULT-III screen.
7. Make sure that cooling fan operates.
   If the results are NG, go to EC-141, "Diagnosis Procedure".

WITHOUT CONSULT-III

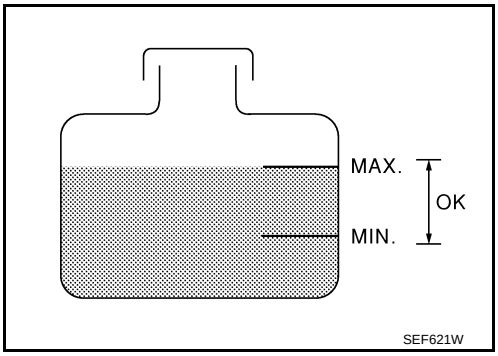

1. Check the coolant level in the reservoir tank and radiator.
   Allow engine to cool before checking coolant level.
   If the coolant level in the reservoir tank and/or radiator is below the proper range, skip the following steps and go to EC-141, "Diagnosis Procedure".
2. Confirm whether customer filled the coolant or not. If customer filled the coolant, skip the following steps and go to EC-141, "Diagnosis Procedure".
3. Start engine and make sure that cooling fan (crankshaft driven) operates normally.
   If NG, refer to “ENGINE COOLING SYSTEM” in LC section.
   If OK, go to the following step.
   Be careful not to overheat engine.
4. Turn ignition switch OFF.
5. Disconnect engine coolant temperature sensor harness connector.
6. Connect 150 Ω resistor to engine coolant temperature sensor harness connector.
7. Start engine and make sure that cooling fan operates.
   Be careful not to overheat engine.
8. If NG, go to EC-141, "Diagnosis Procedure".

Wiring Diagram

INFOID:0000000003759474

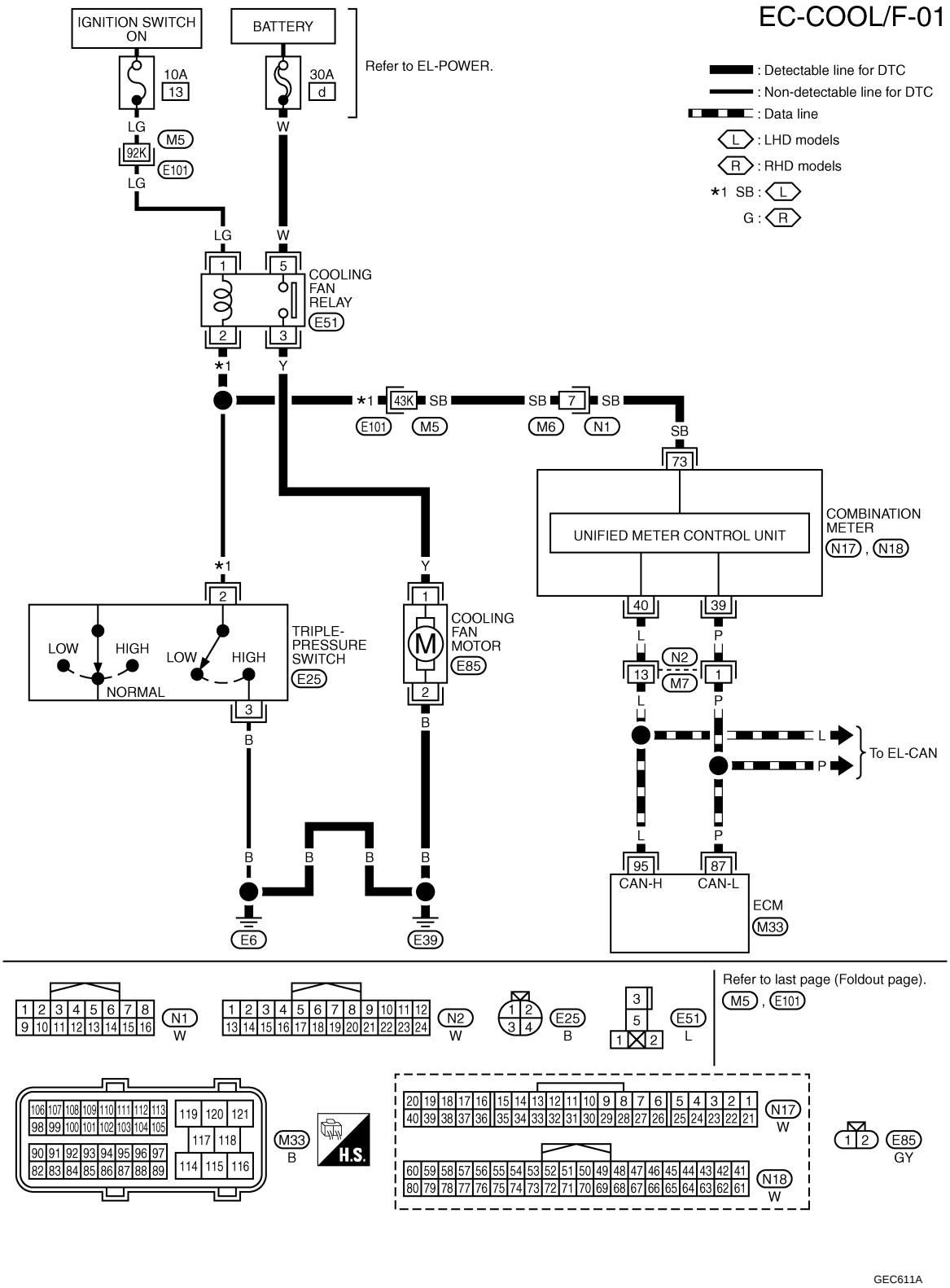

Diagnosis Procedure

INFOID:0000000003759475

1. CHECK COOLING FAN (CRANKSHAFT DRIVEN) OPERATION

1. Start engine and let it idle.
2. Make sure that cooling fan (crankshaft driven) operates normally.

OK or NG

OK (With CONSULT-III)>>GO TO 2.
OK (Without CONSULT-III)>>GO TO 3.
NG >> Check cooling fan (crankshaft driven). Refer to “ENGINE COOLING SYSTEM” in LC section.

2.CHECK COOLING FAN OPERATION

With CONSULT-III

1. Start engine and let it idle.
2. Select “ENG COOLANT TEMP” in “ACTIVE TEST” mode with CONSULT-III.
3. Set “ENG COOLANT TEMP” to 95°C (203°by “Qu” and “UP” on CONSULT-III screen.
4. Make sure that cooling fan operate.

OK or NG

OK >> GO TO 4.
NG >> Check cooling fan control circuit. (Go to “PROCEDURE A”.)

3.CHECK COOLING FAN OPERATION

Without CONSULT-III

1. Turn ignition switch OFF
2. Disconnect engine coolant temperature sensor harness connector.
3. Connect 150 Ω resistor to engine coolant temperature sensor harness connector.
4. Start engine and make sure that cooling fan operates.

OK or NG

OK >> GO TO 4.
NG >> Check cooling fan control circuit. (Go to “PROCEDURE A”.)

4.CHECK COOLING SYSTEM FOR LEAK

Apply pressure to the cooling system with a tester, and check if the pressure drops. Refer to “ENGINE COOLING SYSTEM” in LC section.

CAUTION:
Higher than the specified pressure may cause radiator damage.
Pressure should not drop.

OK or NG

OK >> GO TO 5.
NG >> Check the following for leak. Refer to “ENGINE COOLING SYSTEM” in LC section.
- Hose
- Radiator
- Radiator cap
- Water pump
- Reservoir tank

5.CHECK COMPONENT PARTS

Check the following.
- Thermostat. Refer to “ENGINE COOLING SYSTEM” in LC section.
- Engine coolant temperature sensor. Refer to EC-118, "Component Inspection".

OK or NG

OK >> GO TO 6.
NG >> Replace malfunctioning component.

6.CHECK MAIN 12 CAUSES

If the cause cannot be isolated, go to EC-145, "Main 12 Causes of Overheating".

>> **INSPECTION END**

PROCEDURE A

1.CHECK COOLING FAN POWER SUPPLY CIRCUIT

1. Turn ignition switch OFF.
2. Disconnect cooling fan relay E51.
3. Turn ignition switch ON.

4. Check voltage between cooling fan relay terminals 1, 5 and ground with CONSULT-III or tester.

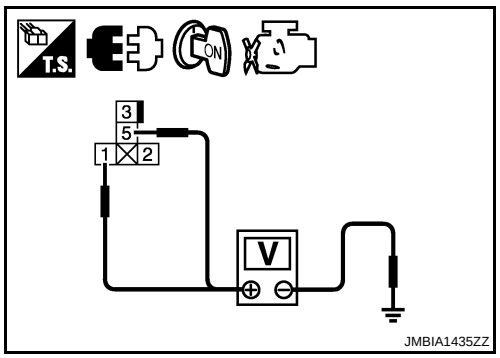

Voltage: Battery voltage

OK or NG

OK >> GO TO 3.
NG >> GO TO 2.

2. DETECT MALFUNCTIONING PART

Check the following.
- 10A fuse (No.13)
- 30A fusible link (letter d)
- Harness connectors M5, E101
- Harness for open or short between cooling fan relay and fuse
- Harness for open or short between cooling fan relay and battery

>> Repair open circuit or short to ground in harness or connectors.

3. CHECK COOLING FAN MOTOR CIRCUIT FOR OPEN AND SHORT

1. Disconnect cooling fan motor (1) harness connector (2).

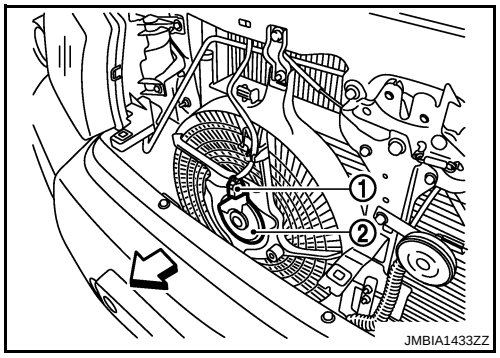

⇦ : Vehicle front

2. Check harness continuity between the following.
   cooling fan relay terminal 3 and cooling fan motor terminal 1.
   cooling fan motor terminal 2 and ground.
   Refer to Wiring Diagram.

Continuity should exist.

3. Also check harness for short to ground and short to power.

OK or NG

OK >> GO TO 4.
NG >> Repair open circuit or short to ground or short to power in harness or connectors.

4. CHECK COOLING FAN MOTOR SIGNAL CIRCUIT FOR OPEN OR SHORT

1. Disconnect triple-pressure switch harness connector.
2. Check harness continuity between cooling fan relay terminal 2 and triple-pressure switch terminal 2.
   Check harness continuity between triple-pressure switch terminal 3 and ground.
   Refer to Wiring Diagram.

Continuity should exist.

3. Also check harness for short to ground and short to power.

OK or NG

OK >> GO TO 5.
NG >> Repair open circuit or short to ground or short to power in harness or connectors.

5. CHECK COOLING FAN MOTOR SIGNAL CIRCUIT FOR OPEN OR SHORT-II

1. Disconnect combination meter harness connector.
2. Check harness continuity between cooling fan relay terminal 2 and combination meter terminal 73.
   Check harness continuity between triple-pressure switch terminal 2 and combination meter terminal 73.
   Refer to Wiring Diagram.

Continuity should exist.

3. Also check harness for short to ground and short to power.

OK or NG

OK >> GO TO 7.
NG >> GO TO 6.

6. DETECT MALFUNCTIONING PART

Check the following.
- Harness connectors E101, M5
- Harness connectors M6, N1
- Harness for open or short between cooling fan relay and combination meter

>> Repair open circuit or short to ground or short to power in harness or connectors.

7. CHECK COOLING FAN MOTOR SIGNAL CIRCUIT FOR OPEN OR SHORT-III

Check harness continuity between Combination Meter and ECM.
Refer to EL-117, "Main Line Between ECM and Combination Meter".

OK or NG

OK >> GO TO 8.
NG >> Repair the main line between the ECM and combination meter.

8. CHECK COOLING FAN RELAY

Refer to EC-145, "Component Inspection".

OK or NG

OK >> GO TO 9.
NG >> Replace cooling fan relay.

9. CHECK TRIPLE-PRESSURE SWITCH

Refer to “Electrical Components Inspection” in HA section.

OK or NG

OK >> GO TO 10.
NG >> Replace cooling fan relay.

10. CHECK COOLING FAN MOTOR

Refer to EC-145, "Component Inspection".

OK or NG

OK >> GO TO 11.
NG >> Replace cooling fan motors.

11. CHECK COMBINATION METER

Refer to EL-54, "Self-Diagnosis Mode of Combination meter".

OK or NG

OK >> GO TO 12.
NG >> Replace cooling fan motors.

12. CHECK INTERMITTENT INCIDENT

Refer to EC-70.

>> **INSPECTION END**

Main 12 Causes of Overheating

INFOID:0000000003759476

Engine	Step	Inspection item	Equipment	Standard	Reference page
OFF	1	• Blocked radiator • Blocked condenser • Blocked radiator grille • Blocked bumper	• Visual	No blocking	—
	2	• Coolant mixture	• Coolant tester	50 - 50% coolant mixture	See “RECOMMENDED AND LUBRICANTS” in MA section.
	3	• Coolant level	• Visual	Coolant up to MAX level in reservoir tank and radiator filler neck	See “ENGINE MAINTENANCE” in MA section.
	4	• Radiator cap	• Pressure tester	See “ENGINE COOLING SYSTEM” in LC section.	
ON*2	5	• Coolant leaks	• Visual	No leaks	See “ENGINE COOLING SYSTEM” in LC section.
ON*2	6	• Thermostat	• Touch the upper and lower radiator hoses	Both hoses should be hot	See “ENGINE COOLING SYSTEM” in LC section.
ON*1	7	• Cooling fan	• CONSULT-III	Operating	See trouble diagnosis for DTC P0217 (EC-138).
ON*2	7	• Cooling fan (Crankshaft driven)	• Visual	Operating	See “ENGINE COOLING SYSTEM” in LC section.
OFF	8	• Combustion gas leak	• Color checker chemical tester 4 Gas analyzer	Negative	—
ON*3	9	• Coolant temperature gauge	• Visual	Gauge less than 3/4 when driving	—
		• Coolant overflow to reservoir tank	• Visual	No overflow during driving and idling	See “ENGINE MAINTENANCE” in MA section.
OFF*4	10	• Coolant return from reservoir tank to radiator	• Visual	Should be initial level in reservoir tank	See “ENGINE MAINTENANCE” in MA section.
OFF	11	• Cylinder head	• Straight gauge feeler gauge	0.1 mm (0.004 in) Maximum distortion (warping)	See “CYLINDER HEAD” in EM section.
	12	• Cylinder block and pistons	• Visual	No scuffing on cylinder walls or piston	See “CYLINDER BLOCK” in EM section.

*1: Turn the ignition switch ON.

*2: Engine running at 3,000 rpm for 10 minutes.

*3: Drive at 90 km/h (56 MPH) for 30 minutes and then let idle for 10 minutes.

*4: After 60 minutes of cool down time.

For more information, refer to “OVERHEATING ANALYSIS” in LC section.

Component Inspection

INFOID:0000000003759477

COOLING FAN RELAY

1. Disconnect cooling fan relay harness connectors.
2. Supply cooling fan motor terminals with battery voltage and check operation.

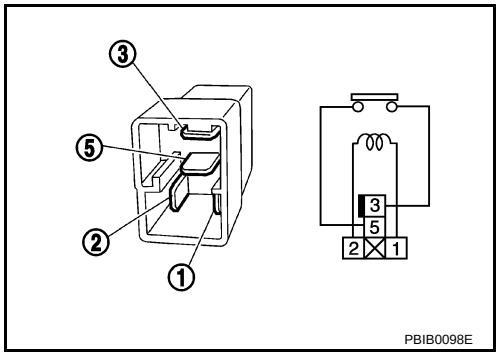

Terminals	Conditions	Continuity
3 and 5	12 V direct current supply between terminals 1 and 2	Existed
	No current supply	Not existed

If NG, replace cooling fan relay.

COOLING FAN MOTOR

1. Disconnect cooling fan motor harness connectors.
2. Supply cooling fan motor terminals with battery voltage and check operation.

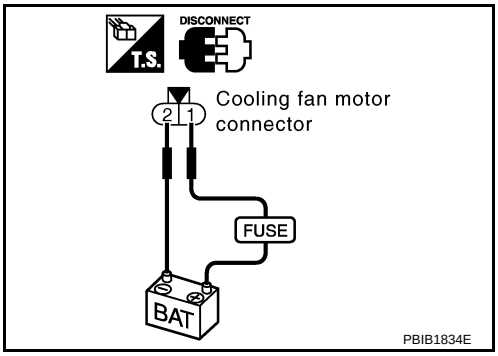

	terminals	
Cooling fan motor	+	–
	1	2

Cooling fan motor should operate.
If NG, replace cooling fan motor.

DTC P0222, P0223 APP SENSOR

Description

INFOID:0000000003759478

The accelerator pedal position sensor is installed on the upper end of the accelerator pedal assembly. The sensors detect the accelerator pedal position and sends a signal to the ECM. The ECM uses the signal to determine the amount of fuel to be injected.

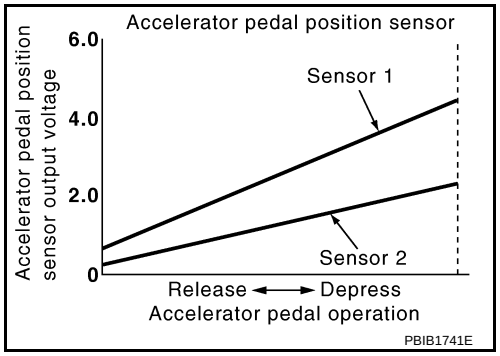

CONSULT-III Reference Value in Data Monitor Mode

INFOID:0000000003759479

Specification data are reference values.

MONITOR ITEM	CONDITION		SPECIFICATION
ACCEL POS SEN*	• Ignition switch: ON (Engine stopped)	Accelerator pedal: Fully released	0.5 - 1.0 V
		Accelerator pedal: Fully depressed	4.0 - 4.8 V
ACCEL SEN 2*	• Ignition switch: ON (Engine stopped)	Accelerator pedal: Fully released	0.3 - 1.2 V
		Accelerator pedal: Fully depressed	3.7 - 4.8 V

*: This signal is converted by ECM internally. Thus, this differs from ECM terminals voltage.

On Board Diagnosis Logic

INFOID:0000000003759480

These self-diagnoses have the one trip detection logic.
MI will not light up for these self-diagnoses.
NOTE:
If DTC P0222 or P0223 is displayed with DTC P0652 or P0653, first perform trouble diagnosis for DTC P0652 or P0653. Refer to EC-214.

DTC No.	Trouble diagnosis name	DTC detecting condition	Possible cause
P0222 0222	Accelerator pedal position sensor 2 circuit low input	An excessively low voltage from the APP sensor 2 is sent to ECM.	• Harness or connectors (The APP sensor 2 circuit is open or shorted.) • Accelerator pedal position sensor (Accelerator pedal position sensor 2)
P0223 0223	Accelerator pedal position sensor 2 circuit high input	An excessively high voltage from the APP sensor 2 is sent to ECM.	

DTC Confirmation Procedure

INFOID:0000000003759481

NOTE:
If DTC Confirmation Procedure has been previously conducted, always turn ignition switch OFF and wait at least 10 seconds before conducting the next test.

1. Turn ignition switch ON.
2. Wait at least 5 seconds.
3. Check DTC.
4. If DTC is detected, go to EC-149, "Diagnosis Procedure".

Wiring Diagram

INFOID:0000000003759482

EC-APPS2-01

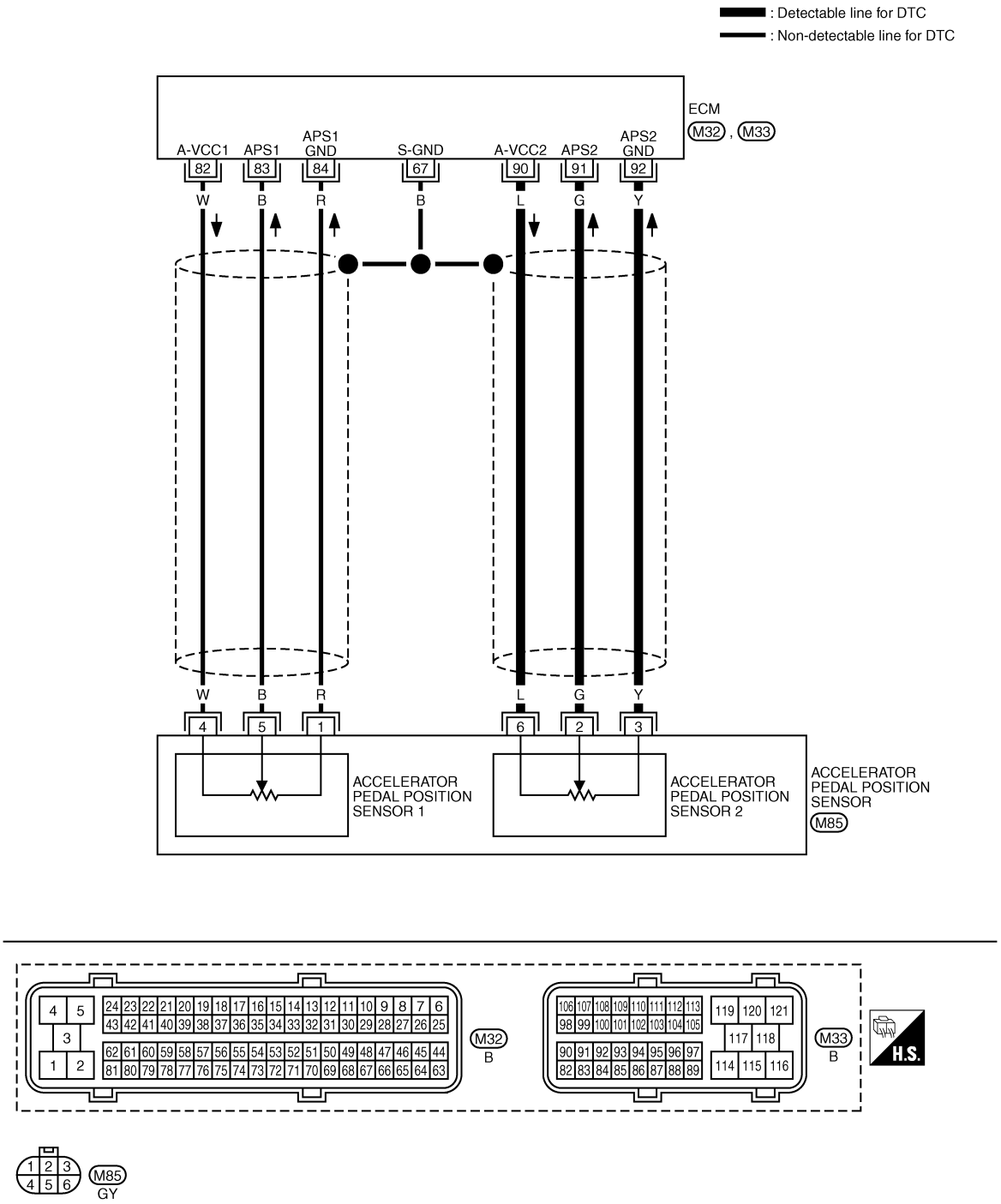

Specification data are reference values and are measured between each terminal and ground.

TERMINAL NO. (Wire color)		Description	Condition	Value (Approx.)
+	–	Signal name		
67 (B)	—	Sensor ground (Sensor shield circuit)	—	—
82 (W)	84 (R)	Sensor power supply (Accelerator pedal position sensor 1 / Crankshaft position sensor / EGR volume control valve control position sensor)	**[Ignition switch ON]**	Approximately 5 V
83 (B)	84 (R)	Accelerator pedal position sensor 1	**[Ignition switch ON]** • Engine: Stopped • Accelerator pedal: Fully released	0.5 - 1.0 V
			[Ignition switch ON] • Engine: Stopped • Accelerator pedal: Fully depressed	3.7 - 4.7 V
84 (R)	—	Accelerator pedal position sensor 1 ground	—	—
90 (L)	92 (Y)	Accelerator pedal position sensor 2 power supply	**[Ignition switch ON]**	Approximately 5 V
91 (G)	92 (Y)	Accelerator pedal position sensor 2	**[Ignition switch ON]** • Engine: Stopped • Accelerator pedal: Fully released	0.15 - 0.6 V
			[Ignition switch ON] • Engine: Stopped • Accelerator pedal: Fully depressed	1.85 - 2.4 V
92 (Y)	—	Accelerator pedal position sensor 2 ground	—	—

Diagnosis Procedure

INFOID:0000000003759483

1. CHECK GROUND CONNECTIONS

1. Turn ignition switch OFF.
2. Loosen and retighten ground screws on the body.
   Refer to EC-81, "Ground Inspection".

- Body ground M97 (1)
- Body ground M99 (2)
- ECM (3)

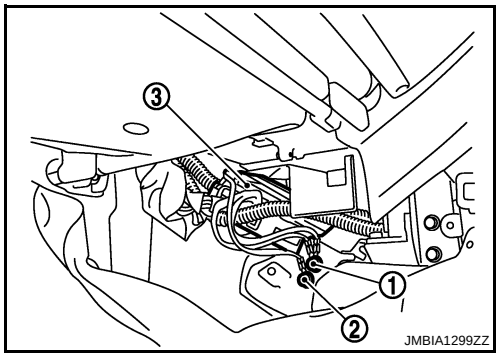

OK or NG

OK >> GO TO 2.
NG >> Repair or replace ground connections.

2. CHECK APP SENSOR 2 POWER SUPPLY CIRCUIT

1. Disconnect accelerator pedal position (APP) sensor (1) harness connector.
2. Turn ignition switch ON.

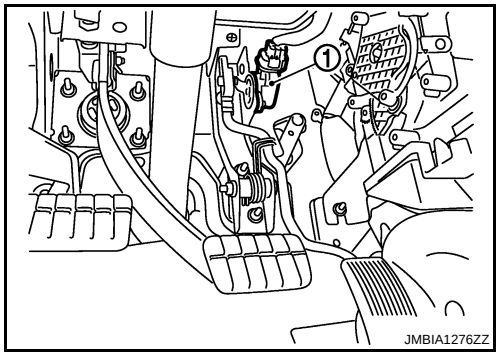

3. Check voltage between APP sensor terminal 6 and ground with CONSULT-III or tester.

Voltage: Approximately 5 V

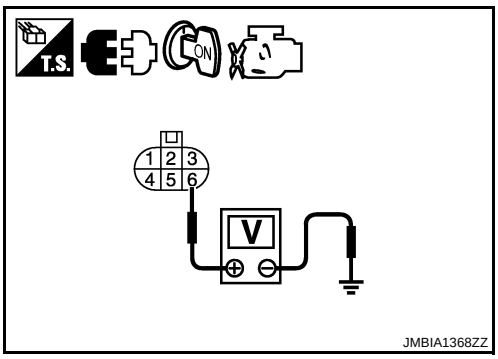

OK or NG

OK >> GO TO 3.
NG >> Repair open circuit or short to ground or short to power in harness or connectors.

3. CHECK APP SENSOR 2 GROUND CIRCUIT FOR OPEN AND SHORT

1. Turn ignition switch OFF.
2. Disconnect ECM harness connector.
3. Check harness continuity between APP sensor terminal 3 and ECM terminal 92. Refer to Wiring Diagram.

Continuity should exist.

4. Also check harness for short to ground and short to power.

OK or NG

OK >> GO TO 4.
NG >> Repair open circuit or short to ground or short to power in harness or connectors.

4. CHECK APP SENSOR 2 INPUT SIGNAL CIRCUIT FOR OPEN AND SHORT

1. Check harness continuity between ECM terminal 91 and APP sensor terminal 2. Refer to Wiring Diagram.

Continuity should exist.

2. Also check harness for short to ground and short to power.

OK or NG

OK >> GO TO 5.
NG >> Repair open circuit or short to ground or short to power in harness or connectors.

5. CHECK APP SENSOR

Refer to EC-150, "Component Inspection".

OK or NG

OK >> GO TO 6.
NG >> Replace accelerator pedal assembly.

6. CHECK INTERMITTENT INCIDENT

Refer to EC-70.

>> **INSPECTION END**

Component Inspection

INFOID:0000000003759484

ACCELERATOR PEDAL POSITION SENSOR

1. Reconnect all harness connectors disconnected.
2. Turn ignition switch ON.
3. Check voltage between ECM harness connector terminals as follows.

ECM			Condition		Voltage
+		–			
Connector	Terminal	Terminal			
M33	83 (APP sensor 1 signal)	84 (Sensor ground)	Accelerator pedal	Fully released	0.5 - 1.0 V
				Fully depressed	3.7 - 4.7 V
	91 (APP sensor 2 signal)	92 (Sensor ground)	Accelerator pedal	Fully released	0.15 - 0.6 V
				Fully depressed	1.85 - 2.4 V

4. If NG, replace accelerator pedal assembly.

Removal and Installation

INFOID:0000000003759485

ACCELERATOR PEDAL

Refer to “ACCELERATOR CONTROL SYSTEM” in FE section.

DTC P0335 CKP SENSOR

Description

INFOID:0000000003759500

The crankshaft position (CKP) sensor is located on the cylinder block rear housing facing the gear teeth (cogs) of the signal plate at the end of the crankshaft. It detects the fluctuation of the engine revolution.
The sensor consists of a permanent magnet and Hall IC.
When the engine is running, the high and low parts of the teeth cause the gap with the sensor to change. The changing gap causes the magnetic field near the sensor to change. Due to the changing magnetic field, the voltage from the sensor changes. The ECM receives the voltage signal and detects the fluctuation of the engine revolution.

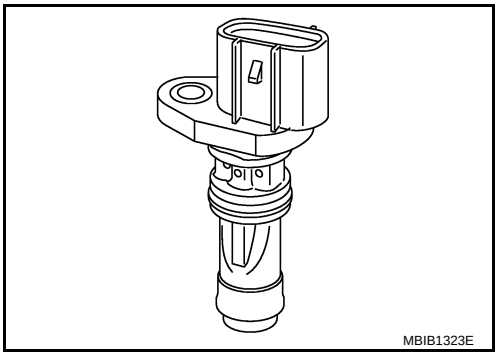

CONSULT-III Reference Value in Data Monitor Mode

INFOID:0000000003759501

Specification data are reference values.

MONITOR ITEM	CONDITION	SPECIFICATION
CKPS-RPM (TDC)	• Run engine and compare CONSULT-III value with the tachometer indication.	Almost the same speed as the tachometer indication

On Board Diagnosis Logic

INFOID:0000000003759502

NOTE:
If DTC P0335 is displayed with DTC P0642 or P0643, first perform trouble diagnosis for DTC P0642 or P0643. Refer to EC-210.

DTC No.	Trouble diagnosis name	DTC detecting condition	Possible cause
P0335 0335	Crankshaft position sensor circuit	Crankshaft position sensor signal is not detect by the ECM when engine is running.	• Harness or connectors (The sensor circuit is open or shorted.) • Crankshaft position sensor

DTC Confirmation Procedure

INFOID:0000000003759503

NOTE:
If DTC Confirmation Procedure has been previously conducted, always turn ignition switch OFF and wait at least 10 seconds before conducting the next test.

1. Start engine and let it idle for at least 5 seconds.
   If engine could not start, keep ignition switch at START position for 5 seconds.
2. Check 1st trip DTC.
3. If 1st trip DTC is detected, go to EC-154, "Diagnosis Procedure".

Wiring Diagram

INFOID:0000000003759504

EC-CKPS-01

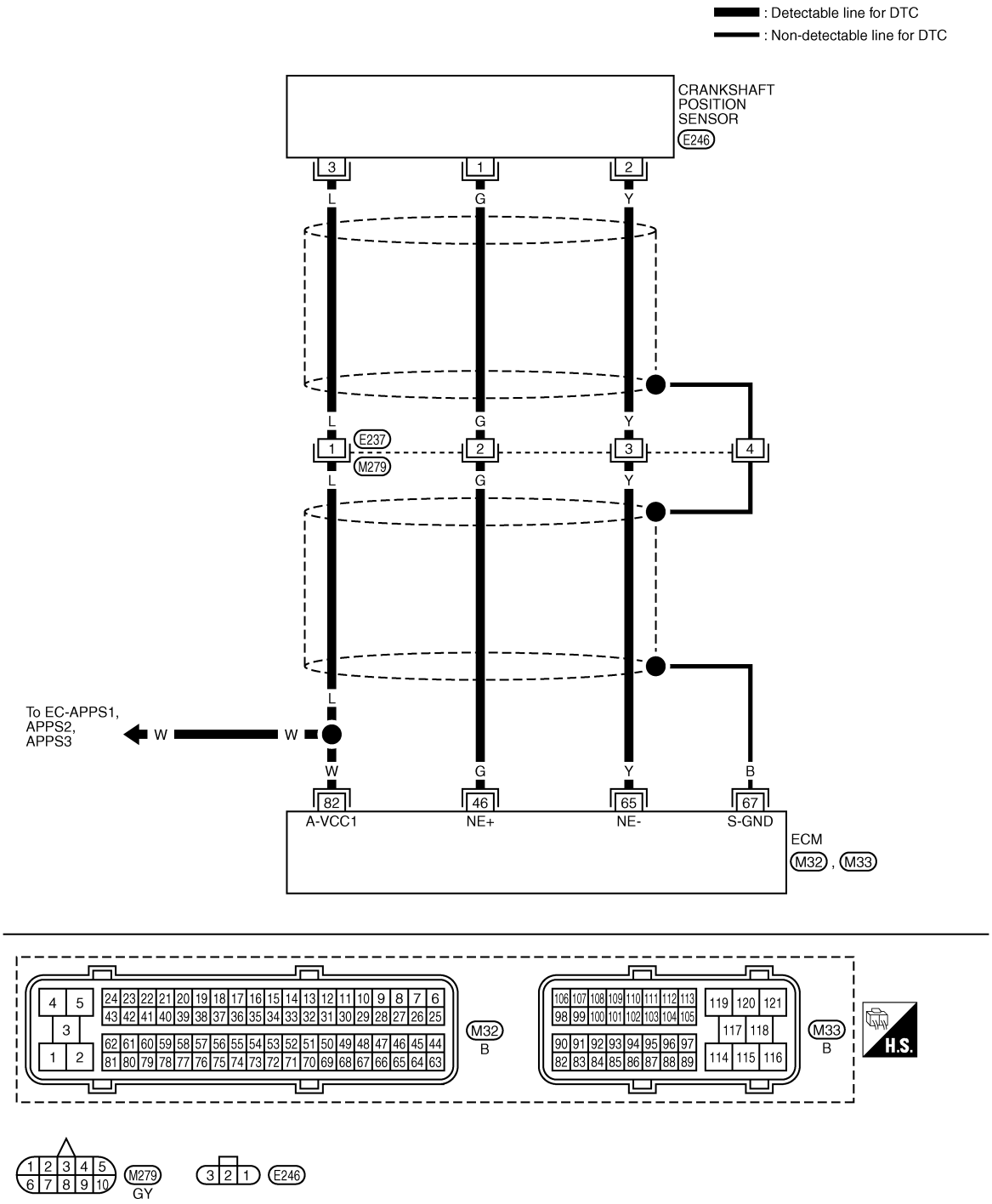

GEC613A

Specification data are reference values and are measured between each terminal and ground.
Pulse signal is measured by CONSULT-III.

TERMINAL NO. (Wire color)		Description	Condition	Value (Approx.)
+	–	Signal name		
46 (G)	65 (Y)	Crankshaft position sensor	**[Engine is running]** • **Warm-up condition** • Idle speed **NOTE:** The pulse cycle changes depending on rpm at idle	Approximately 3.5 V ★ 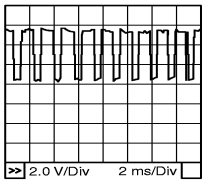 MBIB0879E
			[Engine is running] • **Warm-up condition** • Engine speed: 2,000 rpm	Approximately 3.5 V ★ 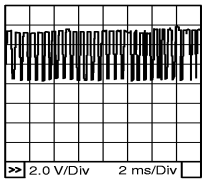 MBIB0880E
65 (Y)	—	Crankshaft position sensor ground	—	—
67 (B)	—	Sensor ground (Sensor shield circuit)	—	—
82 (W)	65 (Y)	Sensor power supply (Accelerator pedal position sensor 1 / Crankshaft position sensor / EGR volume control valve control position sensor)	**[Ignition switch ON]**	Approximately 5 V

Diagnosis Procedure

INFOID:0000000003759506

1. CHECK GROUND CONNECTIONS

1. Turn ignition switch OFF.
2. Loosen and retighten ground screws on the body.
   Refer to EC-81, "Ground Inspection".

- Body ground M97 (1)
- Body ground M99 (2)
- ECM (3)

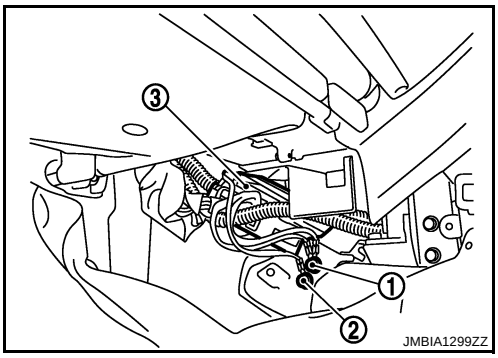

OK or NG

OK >> GO TO 2.
NG >> Repair or replace ground connections.

2. CHECK CKP SENSOR POWER SUPPLY CIRCUIT

1. Disconnect crankshaft position (CKP) sensor (1) harness connector.

   ⇦ : Vehicle front

2. Turn ignition switch ON.

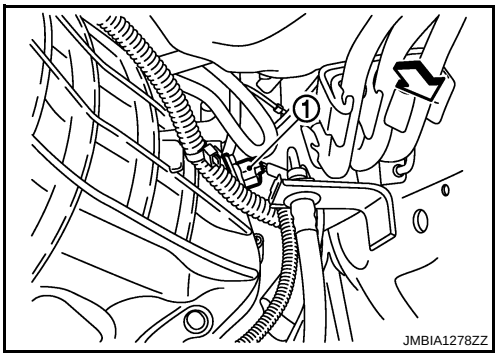

3. Check voltage between CKP sensor terminal 3 and ground with CONSULT-III or tester.

Voltage: Approximately 5 V

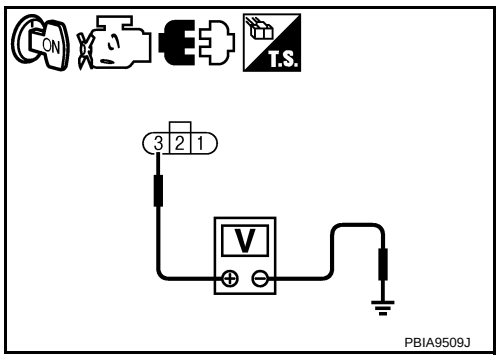

OK or NG

OK >> GO TO 4.
NG >> GO TO 3.

3. DETECT MALFUNCTIONING PART

Check the following.
- Harness connectors E237, M279
- Harness for open or short between CKP sensor and ECM

>> Repair open circuit or short to ground or short to power in harness or connectors.

4. CHECK CKP SENSOR GROUND CIRCUIT FOR OPEN AND SHORT

1. Turn ignition switch OFF.
2. Disconnect ECM harness connector.
3. Check harness continuity between ECM terminal 65 and CKP sensor terminal 2. Refer to Wiring Diagram.

Continuity should exist.

4. Also check harness for short to ground and short to power.

OK or NG

OK >> GO TO 6.
NG >> GO TO 5.

5. DETECT MALFUNCTIONING PART

Check the following.
- Harness connectors E237, M279
- Harness for open or short between CKP sensor and ECM

>> Repair open circuit or short to ground or short to power in harness or connectors.

6. CHECK CKP SENSOR INPUT SIGNAL CIRCUIT FOR OPEN AND SHORT

1. Check harness continuity between ECM terminal 46 and CKP sensor terminal 1. Refer to Wiring Diagram.

Continuity should exist.

2. Also check harness for short to ground and short to power.

OK or NG

OK >> GO TO 8.
NG >> GO TO 7.

7. DETECT MALFUNCTIONING PART

Check the following.
- Harness connectors E237, M279
- Harness for open or short between CKP sensor and ECM

>> Repair open circuit or short to ground or short to power in harness or connectors.

8. CHECK CRANKSHAFT POSITION SENSOR

Refer to EC-156, "Component Inspection".

OK or NG

OK >> GO TO 9.
NG >> Replace crankshaft position sensor.

9. CHECK INTERMITTENT INCIDENT

Refer to EC-70.

>> **INSPECTION END**

Component Inspection

INFOID:0000000003759507

CRANKSHAFT POSITION SENSOR

1. Loosen the fixing bolt of the sensor.
2. Disconnect crankshaft position sensor harness connector.
3. Remove the sensor.
4. Visually check the sensor for chipping.

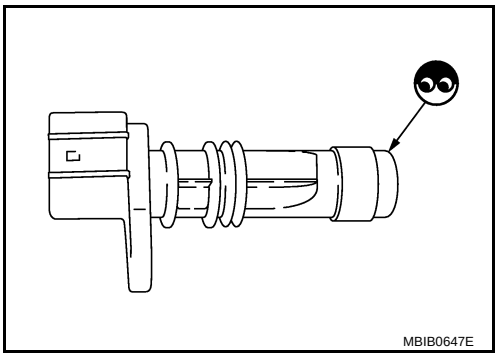

5. Check resistance as shown in the figure.

Terminal No. (Polarity)	Resistance Ω [at 25°C (77°F)]
1 (+) - 2 (-)	Except 0 or ∞
1 (+) - 3 (-)	Except 0
2 (+) - 3 (-)	

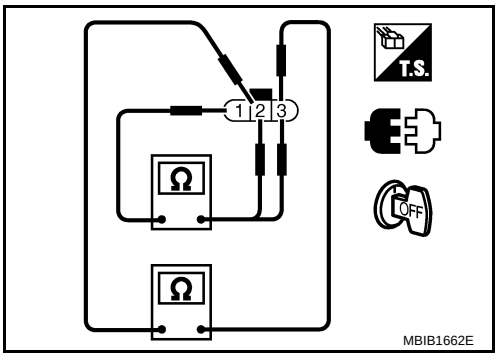

6. If NG, replace crankshaft position sensor.

Removal and Installation

INFOID:0000000003759508

CRANKSHAFT POSITION SENSOR

Refer to MT-3.

DTC P0336 CKP SENSOR

Description

INFOID:0000000003759509

The crankshaft position (CKP) sensor is located on the cylinder block rear housing facing the gear teeth (cogs) of the signal plate at the end of the crankshaft. It detects the fluctuation of the engine revolution.
The sensor consists of a permanent magnet and Hall IC.
When the engine is running, the high and low parts of the teeth cause the gap with the sensor to change. The changing gap causes the magnetic field near the sensor to change. Due to the changing magnetic field, the voltage from the sensor changes. The ECM receives the voltage signal and detects the fluctuation of the engine revolution.

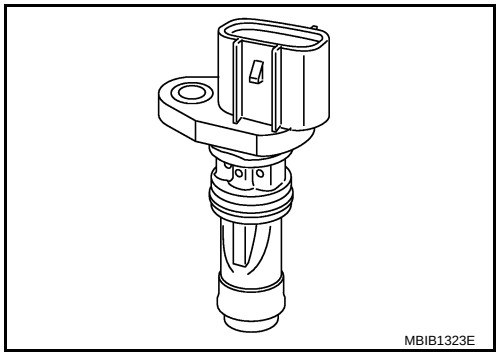

CONSULT-III Reference Value in Data Monitor Mode

INFOID:0000000003759510

Specification data are reference values.

MONITOR ITEM	CONDITION	SPECIFICATION
CKPS·RPM (TDC)	• Tachometer: Connect • Run engine and compare CONSULT-III value with the tachometer indication.	Almost the same speed as the tachometer indication.

On Board Diagnosis Logic

INFOID:0000000003759511

NOTE:
If DTC P0336 is displayed with DTC P0642 or P0643, first perform trouble diagnosis for DTC P0642 or P0643. Refer to EC-210.

DTC No.	Trouble diagnosis name	DTC detecting condition	Possible cause
P0336 0336	Crankshaft position sensor circuit range/performance	Crankshaft position sensor signal is not in the normal pattern when engine is running.	• Harness or connectors (The sensor circuit is open or shorted.) • Crankshaft position sensor • Signal plate

DTC Confirmation Procedure

INFOID:0000000003759512

NOTE:
If DTC Confirmation Procedure has been previously conducted, always turn ignition switch OFF and wait at least 10 seconds before conducting the next test.

1. Start engine and let it idle for at least 5 seconds.
   If engine could not start, keep ignition switch at START position for 5 seconds.
2. Check 1st trip DTC.
3. If 1st trip DTC is detected, go to EC-159, "Diagnosis Procedure".

Wiring Diagram

INFOID:0000000003759513

EC-CKPS-01

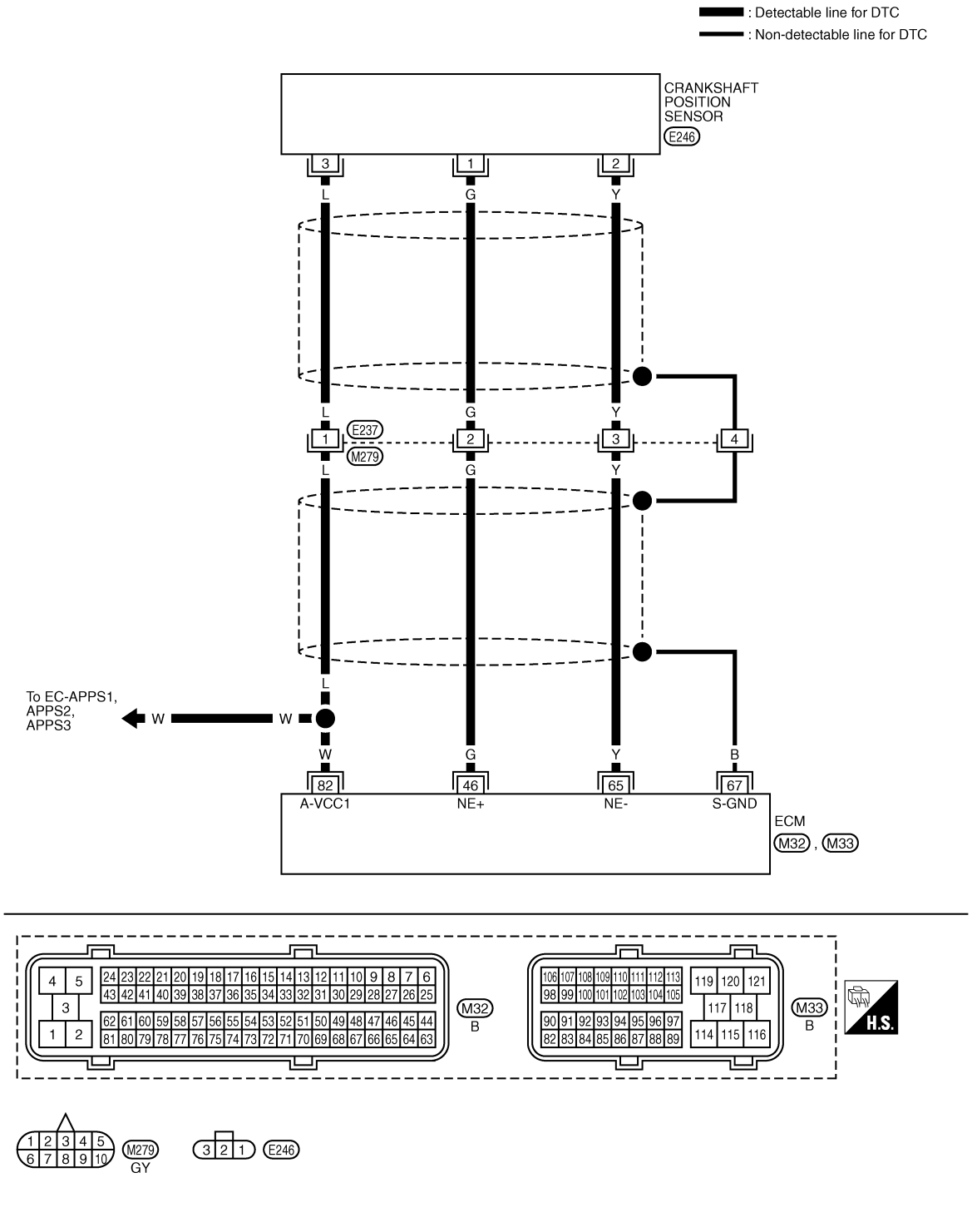

GEC613A

Specification data are reference values and are measured between each terminal and ground.
Pulse signal is measured by CONSULT-III.

TERMINAL NO. (Wire color)		Description	Condition	Value (Approx.)
+	–	Signal name		
46 (G)	65 (Y)	Crankshaft position sensor	**[Engine is running]** • **Warm-up condition** • Idle speed **NOTE:** The pulse cycle changes depending on rpm at idle	Approximately 3.5 V ★ 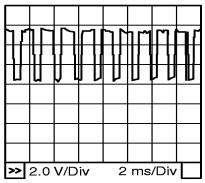 MBIB0879E
			[Engine is running] • **Warm-up condition** • Engine speed: 2,000 rpm	Approximately 3.5 V ★ 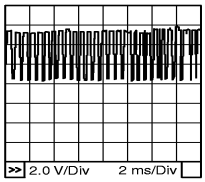 MBIB0880E
65 (Y)	—	Crankshaft position sensor ground	—	—
67 (B)	—	Sensor ground (Sensor shield circuit)	—	—
82 (W)	65 (Y)	Sensor power supply (Accelerator pedal position sensor 1 / Crankshaft position sensor / EGR volume control valve control position sensor)	**[Ignition switch ON]**	Approximately 5 V

★: Average voltage for pulse signal (Actual pulse signal can be confirmed by oscilloscope.)

Diagnosis Procedure

INFOID:0000000003759515

1. CHECK GROUND CONNECTIONS

1. Turn ignition switch OFF.
2. Loosen and retighten ground screws on the body. Refer to EC-81, "Ground Inspection".

- Body ground M97 (1)
- Body ground M99 (2)
- ECM (3)

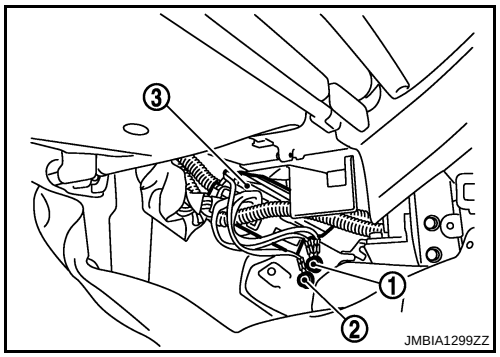

OK or NG

OK >> GO TO 2.
NG >> Repair or replace ground connections.

2. CHECK CKP SENSOR POWER SUPPLY CIRCUIT

1. Disconnect crankshaft position (CKP) sensor (1) harness connector.

   ⇦ : Vehicle front

2. Turn ignition switch ON.

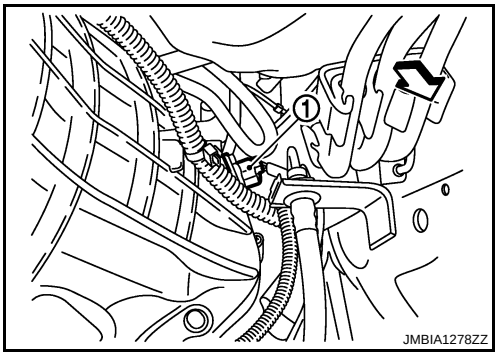

3. Check voltage between CKP sensor terminal 3 and ground with CONSULT-III or tester.

   Voltage: Approximately 5 V

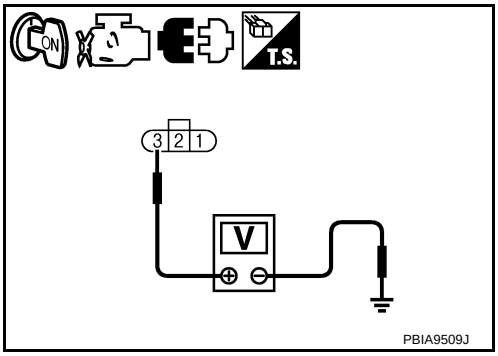

OK or NG

OK >> GO TO 4.
NG >> GO TO 3.

3. DETECT MALFUNCTIONING PART

Check the following.
- Harness connectors E237, M279
- Harness for open or short between CKP sensor and ECM

>> Repair open circuit or short to ground or short to power in harness or connectors.

4. CHECK CKP SENSOR GROUND CIRCUIT FOR OPEN AND SHORT

1. Turn ignition switch OFF.
2. Disconnect ECM harness connector.
3. Check harness continuity between ECM terminal 65 and CKP sensor terminal 2.
   Refer to Wiring Diagram.

   Continuity should exist.

4. Also check harness for short to ground and short to power.

OK or NG

OK >> GO TO 6.
NG >> GO TO 5.

5. DETECT MALFUNCTIONING PART

Check the following.
- Harness connectors E237, M279
- Harness for open or short between CKP sensor and ECM

>> Repair open circuit or short to ground or short to power in harness or connectors.

6. CHECK CKP SENSOR INPUT SIGNAL CIRCUIT FOR OPEN AND SHORT

1. Check harness continuity between ECM terminal 46 and CKP sensor terminal 1.
   Refer to Wiring Diagram.

   Continuity should exist.

2. Also check harness for short to ground and short to power.

OK or NG

OK >> GO TO 8.
NG >> GO TO 7.

7. DETECT MALFUNCTIONING PART

Check the following.
- Harness connectors E237, M279
- Harness for open or short between CKP sensor and ECM

>> Repair open circuit or short to ground or short to power in harness or connectors.

8. CHECK CRANKSHAFT POSITION SENSOR

Refer to EC-161, "Component Inspection".

OK or NG

OK >> GO TO 9.
NG >> Replace crankshaft position sensor.

9. CHECK GEAR TOOTH

Visually check for chipping signal plate gear tooth.

OK or NG

OK >> GO TO 10.
NG >> Replace the signal plate.

10. CHECK INTERMITTENT INCIDENT

Refer to EC-70.

>> **INSPECTION END**

Component Inspection

INFOID:0000000003759516

CRANKSHAFT POSITION SENSOR

1. Loosen the fixing bolt of the sensor.
2. Disconnect crankshaft position sensor harness connector.
3. Remove the sensor.
4. Visually check the sensor for chipping.

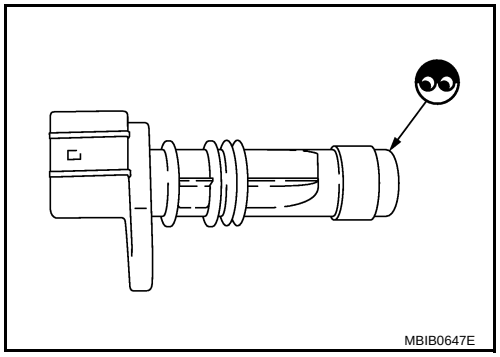

5. Check resistance as shown in the figure.

Terminal No. (Polarity)	Resistance Ω [at 25°C (77°F)]
1 (+) - 2 (-)	Except 0 or ∞
1 (+) - 3 (-)	Except 0
2 (+) - 3 (-)	

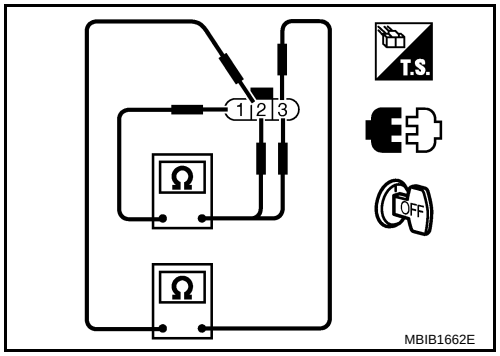

6. If NG, replace crankshaft position sensor.

Removal and Installation

INFOID:0000000003759517

CRANKSHAFT POSITION SENSOR

Refer to MT-3.

DTC P0340 CMP SENSOR

Description

INFOID:0000000003759518

The camshaft position (CMP) sensor senses the retraction with camshaft (left side) to identify a particular cylinder. The camshaft position (CMP) sensor senses the piston position.
When the crankshaft position (CKP) sensor system becomes inoperative, the camshaft position (CMP) sensor provides various controls of engine parts instead, utilizing timing of cylinder identification signals.
The sensor consists of a permanent magnet and Hall IC.
When engine is running, the high and low parts of the teeth cause the gap with the sensor to change.
The changing gap causes the magnetic field near the sensor to change.
Due to the changing magnetic field, the voltage from the sensor changes.

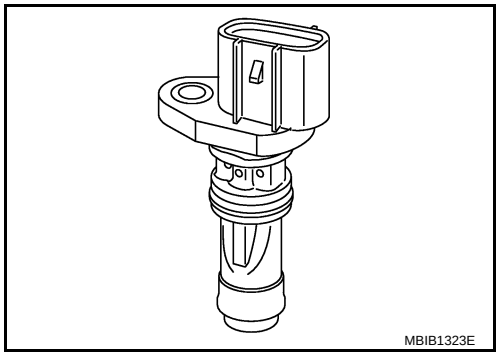

On Board Diagnosis Logic

INFOID:0000000003759519

NOTE:
If DTC P0340 is displayed with DTC P0652 or P0653, first perform trouble diagnosis for DTC P0652 or P0653. Refer to EC-214.

DTC No.	Trouble diagnosis name	DTC detecting condition	Possible cause
P0340 0340	Camshaft position sensor circuit	Camshaft position sensor signal is not detect by the ECM when engine is running.	• Harness or connectors (The sensor circuit is open or shorted.) • Camshaft position sensor

DTC Confirmation Procedure

INFOID:0000000003759520

NOTE:
If DTC Confirmation Procedure has been previously conducted, always turn ignition switch OFF and wait at least 10 seconds before conducting the next test.

1. Start engine and let it idle for at least 5 seconds.
   If engine could not start, keep ignition switch at START position for 5 seconds.
2. Check 1st trip DTC.
3. If 1st trip DTC is detected, go to EC-165, "Diagnosis Procedure".

Wiring Diagram

INFOID:0000000003759521

EC-CMPS-01

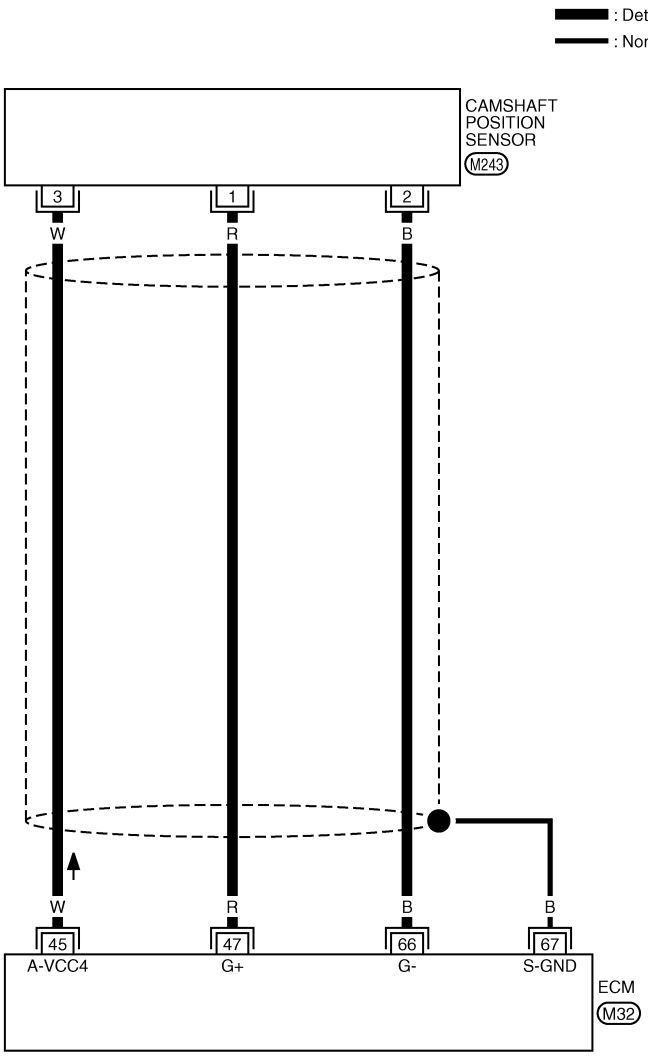

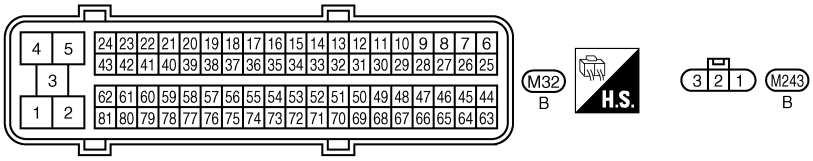

GEC614A

Specification data are reference values and are measured between each terminal and ground.
Pulse signal is measured by CONSULT-III.

TERMINAL NO. (Wire color)		Description	Condition	Value (Approx.)
+	–	Signal name		
45 (W)	66 (B)	Camshaft position sensor power supply	**[Ignition switch ON]**	Approximately 5 V
47 (R)	66 (B)	Camshaft position sensor	**[Engine is running]** • **Warm-up condition** • Idle speed **NOTE:** The pulse cycle changes depending on rpm at idle	Approximately 4.7 V ★ 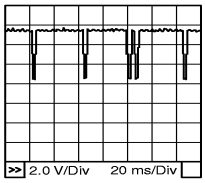 MBIB0877E
			[Engine is running] • **Warm-up condition** • Engine speed: 2,000 rpm	Approximately 4.7 V ★ 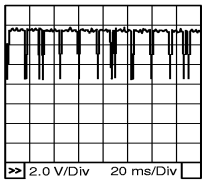 MBIB0878E
66 (B)	—	Camshaft position sensor ground	—	—
67 (B)	—	Sensor ground (Sensor shield circuit)	—	—

★: Average voltage for pulse signal (Actual pulse signal can be confirmed by oscilloscope.)

Diagnosis Procedure

INFOID:0000000003759523

1. CHECK GROUND CONNECTIONS

1. Turn ignition switch OFF.
2. Loosen and retighten ground screws on the body.
   Refer to EC-81, "Ground Inspection".

- Body ground M97 (1)
- Body ground M99 (2)
- ECM (3)

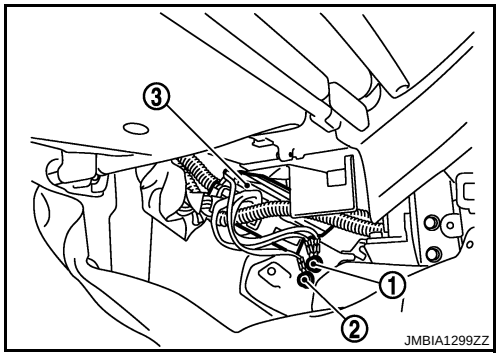

OK or NG

OK >> GO TO 2.
NG >> Repair or replace ground connections.

2. CHECK CMP SENSOR POWER SUPPLY CIRCUIT

1. Disconnect camshaft position (CMP) sensor (1) harness connector.

   ⇦ : Vehicle front

2. Turn ignition switch ON.

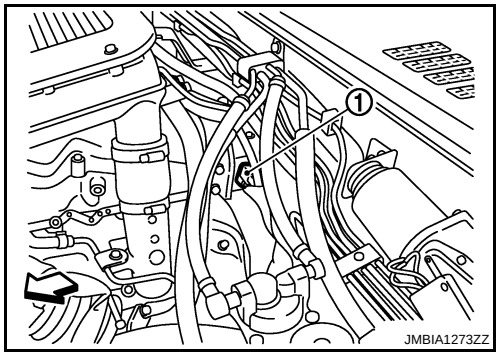

3. Check voltage between CMP sensor terminal 3 and ground with CONSULT-III or tester.

Voltage: Approximately 5 V

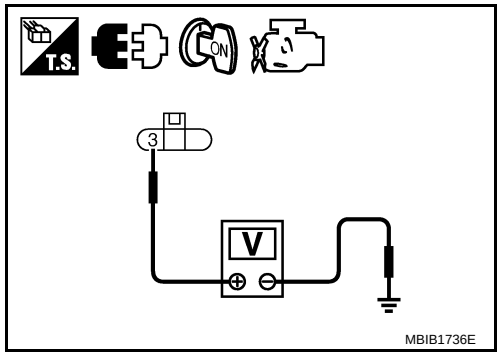

OK or NG

OK >> GO TO 3.
NG >> Repair open circuit or short to ground or short to power in harness or connectors.

3. CHECK CMP SENSOR GROUND CIRCUIT FOR OPEN AND SHORT

1. Turn ignition switch OFF.
2. Disconnect ECM harness connector.
3. Check harness continuity between ECM terminal 66 and CMP sensor terminal 2.

Continuity should exist.

4. Also check harness for short to ground and short to power.

OK or NG

OK >> GO TO 4.
NG >> Repair open circuit or short to ground or short to power in harness or connectors.

4. CHECK CMP SENSOR INPUT SIGNAL CIRCUIT FOR OPEN AND SHORT

1. Check harness continuity between ECM terminal 47 and CMP sensor terminal 1.
Refer to Wiring Diagram.

Continuity should exist.

2. Also check harness for short to ground and short to power.

OK or NG

OK >> GO TO 5.
NG >> Repair open circuit or short to ground or short to power in harness or connectors.

5. CHECK CAMSHAFT POSITION SENSOR

Refer to EC-166, "Component Inspection".

OK or NG

OK >> GO TO 6.
NG >> Replace camshaft position sensor.

6. CHECK INTERMITTENT INCIDENT

Refer to EC-70.

>> **INSPECTION END**

Component Inspection

INFOID:0000000003759524

CAMSHAFT POSITION SENSOR

1. Loosen the fixing bolt of the sensor.
2. Disconnect camshaft position sensor harness connector.
3. Remove the sensor.

4. Visually check the sensor for chipping.

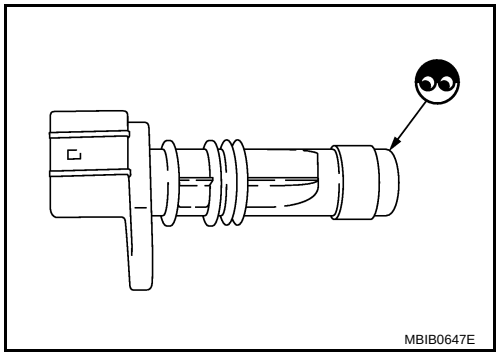

5. Check resistance as shown in the figure.

Terminal No. (Polarity)	Resistance Ω [at 25°C (77°F)]
1 (+) - 2 (-)	Except 0 or ∞
3 (+) - 1 (-)	
3 (+) - 2 (-)	

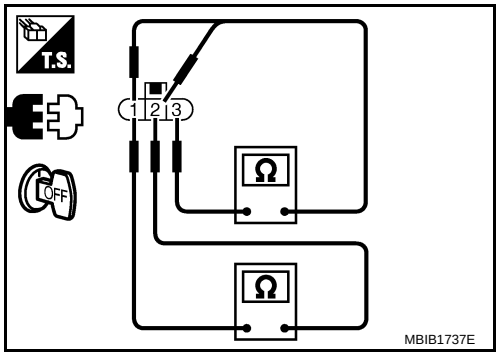

6. If NG, replace camshaft position sensor.

Removal and Installation

INFOID:0000000003759525

CAMSHAFT POSITION SENSOR

Refer to “CYLINDER HEAD” in EM section.

DTC P0341 CMP SENSOR

Description

INFOID:0000000003759526

The camshaft position (CMP) sensor senses the retraction with camshaft (left side) to identify a particular cylinder. The camshaft position (CMP) sensor senses the piston position.
When the crankshaft position (CKP) sensor system becomes inoperative, the camshaft position (CMP) sensor provides various controls of engine parts instead, utilizing timing of cylinder identification signals.
The sensor consists of a permanent magnet and Hall IC.
When engine is running, the high and low parts of the teeth cause the gap with the sensor to change.
The changing gap causes the magnetic field near the sensor to change.
Due to the changing magnetic field, the voltage from the sensor changes.

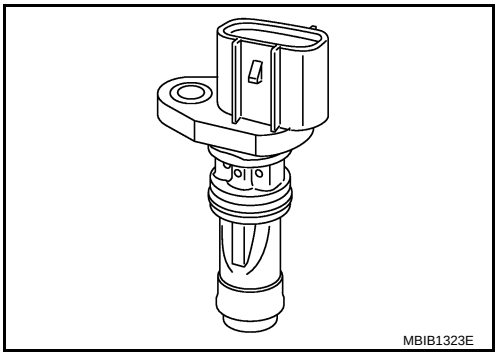

On Board Diagnosis Logic

INFOID:0000000003759527

NOTE:
If DTC P0341 is displayed with DTC P0652 or P0653, first perform trouble diagnosis for DTC P0652 or P0653. Refer to EC-214.

DTC No.	Trouble diagnosis name	DTC detecting condition	Possible cause
P0341 0341	Camshaft position sensor circuit range/performance	Camshaft position sensor signal is not in the normal pattern when engine is running.	• Harness connectors (The sensor circuit is opener shorted.) • Camshaft position sensor • Starter motor • Starting system circuit • Signal plate

DTC Confirmation Procedure

INFOID:0000000003759528

NOTE:
If DTC Confirmation Procedure has been previously conducted, always turn ignition switch OFF and wait at least 10 seconds before conducting the next test.

1. Start engine and let it idle for at least 5 seconds.
   If engine could not start, keep ignition switch at START position for 5 seconds.
2. Check 1st trip DTC.
3. If 1st trip DTC is detected, go to EC-170, "Diagnosis Procedure".

Wiring Diagram

INFOID:0000000003759529

EC-CMPS-01

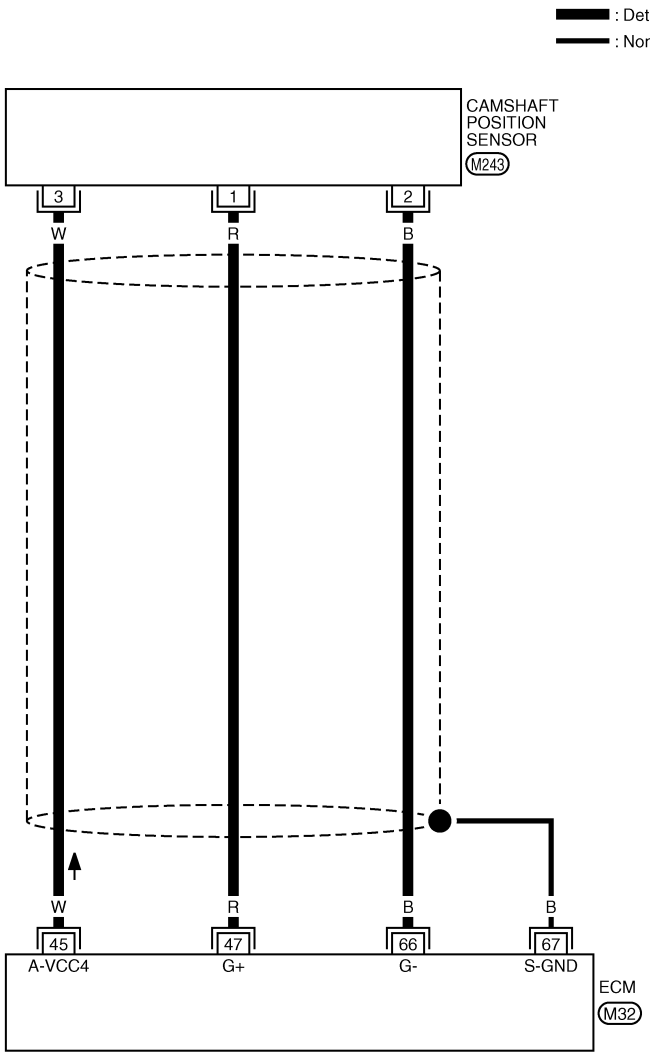

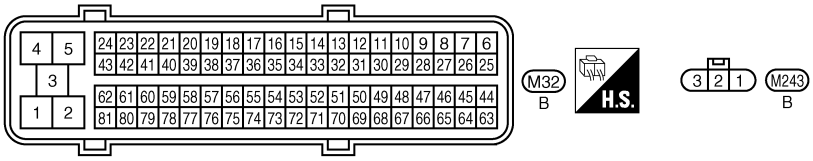

GEC614A

Specification data are reference values and are measured between each terminal and ground.
Pulse signal is measured by CONSULT-III.

TERMINAL NO. (Wire color)		Description	Condition	Value (Approx.)
+	–	Signal name		
45 (W)	66 (B)	Camshaft position sensor power supply	**[Ignition switch ON]**	Approximately 5 V
47 (R)	66 (B)	Camshaft position sensor	**[Engine is running]** • **Warm-up condition** • Idle speed **NOTE:** The pulse cycle changes depending on rpm at idle	Approximately 4.7 V ★ 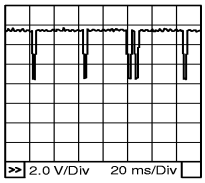 MBIB0877E
			[Engine is running] • **Warm-up condition** • Engine speed: 2,000 rpm	Approximately 4.7 V ★ 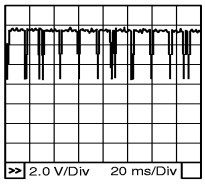 MBIB0878E
66 (B)	—	Camshaft position sensor ground	—	—
67 (B)	—	Sensor ground (Sensor shield circuit)	—	—

★: Average voltage for pulse signal (Actual pulse signal can be confirmed by oscilloscope.)

Diagnosis Procedure

INFOID:0000000003759531

1. CHECK STARTING SYSTEM

Turn ignition switch to START position.

Does the engine turn over?
Does the starter motor operate?

Yes or No

Yes >> GO TO 2.
No >> Check starting system. (Refer to “STARTING SYSTEM in EL section.)

2. CHECK GROUND CONNECTIONS

1. Turn ignition switch OFF.
2. Loosen and retighten ground screws on the body.
   Refer to EC-81, "Ground Inspection".

- Body ground M97 (1)
- Body ground M99 (2)
- ECM (3)

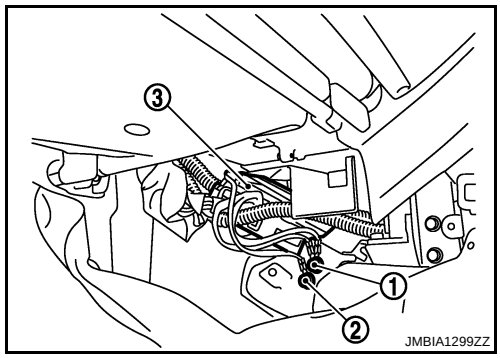

OK or NG

OK >> GO TO 3.
NG >> Repair or replace ground connections.

3. CHECK CMP SENSOR POWER SUPPLY CIRCUIT

1. Disconnect camshaft position (CMP) sensor (1) harness connector.

   ⇦ : Vehicle front

2. Turn ignition switch ON.

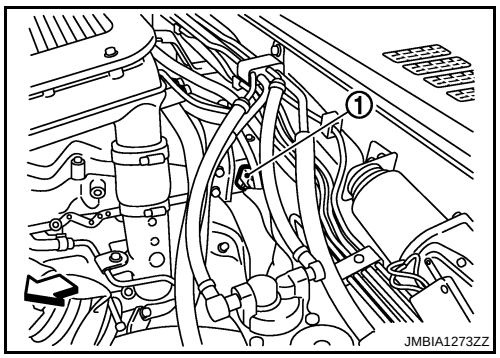

3. Check voltage between CMP sensor terminal 3 and ground with CONSULT-III or tester.

   Voltage: Approximately 5 V

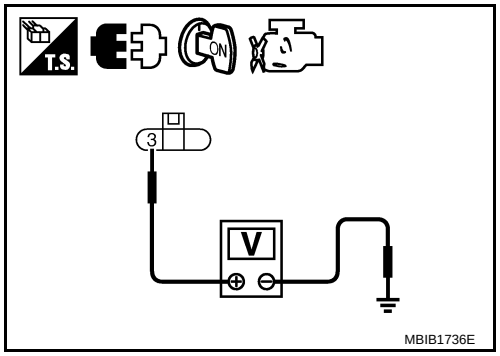

OK or NG

OK >> GO TO 4.
NG >> Repair open circuit or short to ground or short to power in harness or connectors.

4. CHECK CMP SENSOR GROUND CIRCUIT FOR OPEN AND SHORT

1. Turn ignition switch OFF.
2. Disconnect ECM harness connector.
3. Check harness continuity between ECM terminal 66 and CMP sensor terminal 2.

   Continuity should exist.

4. Also check harness for short to ground and short to power.

OK or NG

OK >> GO TO 5.
NG >> Repair open circuit or short to ground or short to power in harness or connectors.

5. CHECK CMP SENSOR INPUT SIGNAL CIRCUIT FOR OPEN AND SHORT

1. Check harness continuity between ECM terminal 47 and CMP sensor terminal 1.
   Refer to Wiring Diagram.

   Continuity should exist.

2. Also check harness for short to ground and short to power.

OK or NG

OK >> GO TO 6.
NG >> Repair open circuit or short to ground or short to power in harness or connectors.

6. CHECK CAMSHAFT POSITION SENSOR

Refer to EC-172, "Component Inspection".

OK or NG

OK >> GO TO 7.
NG >> Replace camshaft position sensor.

7. CHECK CAMSHAFT (EXHAUST)

Check the following.
- Accumulation of debris to the signal plate of camshaft (left side) (1) rear end
- Chipping signal plate of camshaft (left side) rear end

OK or NG

OK >> GO TO 8.
NG >> Remove debris and clean the signal plate of camshaft rear end or replace camshaft.

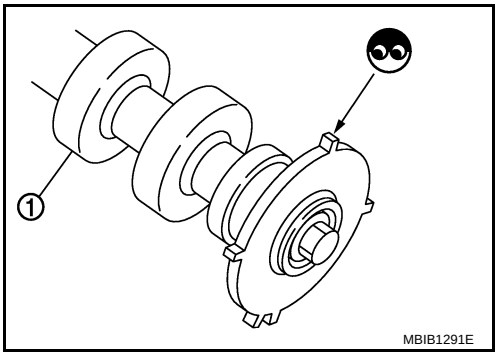

8. CHECK INTERMITTENT INCIDENT

Refer to EC-70.

>> **INSPECTION END**

Component Inspection

INFOID:0000000003759532

CAMSHAFT POSITION SENSOR

1. Loosen the fixing bolt of the sensor.
2. Disconnect camshaft position sensor harness connector.
3. Remove the sensor.
4. Visually check the sensor for chipping.

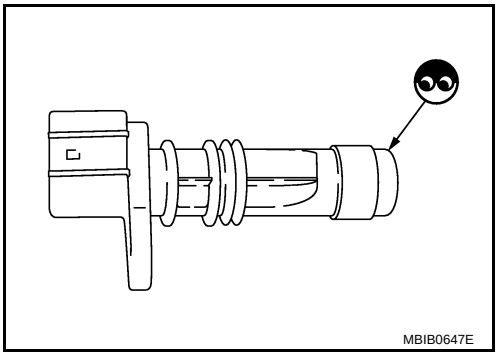

5. Check resistance as shown in the figure.

Terminal No. (Polarity)	Resistance Ω [at 25°C (77°F)]
1 (+) - 2 (-)	Except 0 or ∞
3 (+) - 1 (-)	
3 (+) - 2 (-)	

6. If NG, replace camshaft position sensor.

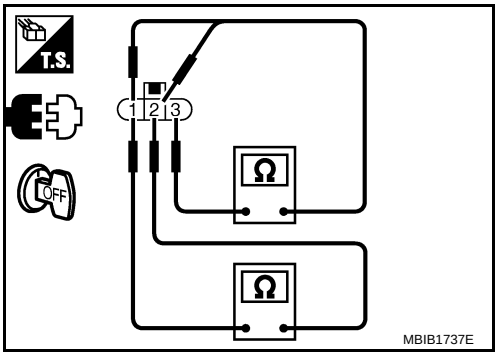

Removal and Installation

INFOID:0000000003759533

CAMSHAFT POSITION SENSOR

Refer to “CYLINDER HEAD” in EM section.

DTC P0380 GLOW RELAY

On Board Diagnosis Logic

INFOID:0000000003759534

DTC No.	Trouble diagnosis name	DTC detecting condition	Possible cause
P0380 0380	Glow relay circuit	An excessively low voltage is sent to ECM through glow relay.	• Harness or connectors (The glow relay circuit is open or shorted.) • Glow relay
		An excessively high voltage is sent to ECM through glow relay.	• Harness or connectors (The glow relay circuit is shorted.) • Glow relay

DTC Confirmation Procedure

INFOID:0000000003759535

NOTE:
If DTC Confirmation Procedure has been previously conducted, always turn ignition switch OFF and wait at least 10 seconds before conducting the next test.

1. Turn ignition switch ON.
2. Wait at least 5 seconds.
3. Check 1st trip DTC.
4. If 1st trip DTC is detected, go to EC-174, "Diagnosis Procedure".

Wiring Diagram

INFOID:0000000003759536

EC-GLORLY-01

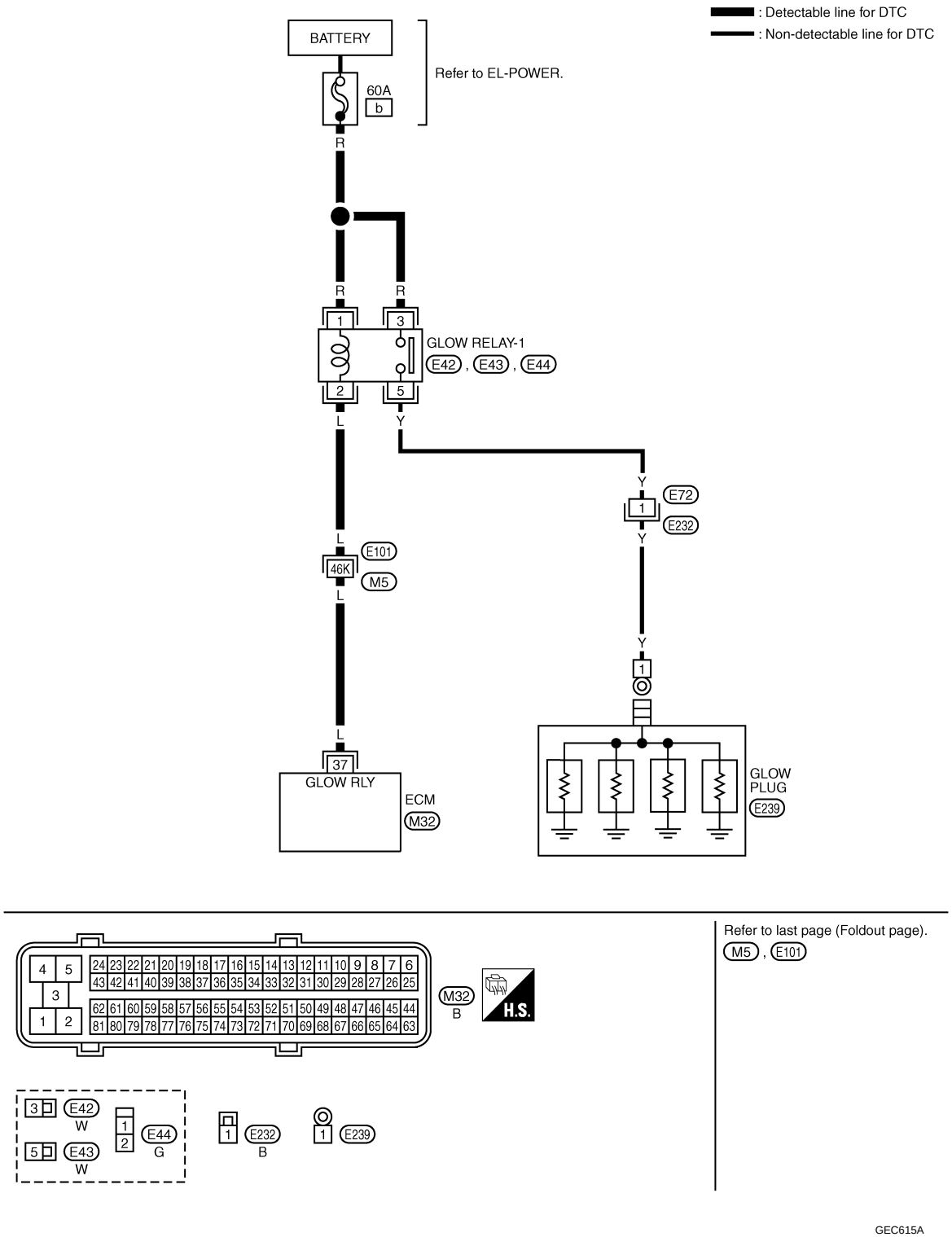

Diagnosis Procedure

INFOID:0000000003759537

1. CHECK GLOW RELAY POWER SUPPLY CIRCUIT

1. Turn ignition switch OFF.
2. Disconnect glow relay (1).

⇦ : Vehicle front

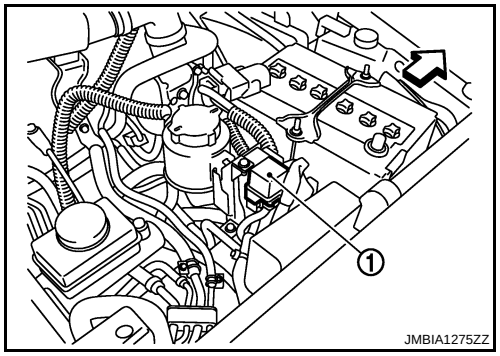

3. Check voltage between ECM relay terminals 1, 3 and ground with CONSULT-III or tester.

Voltage: Battery voltage

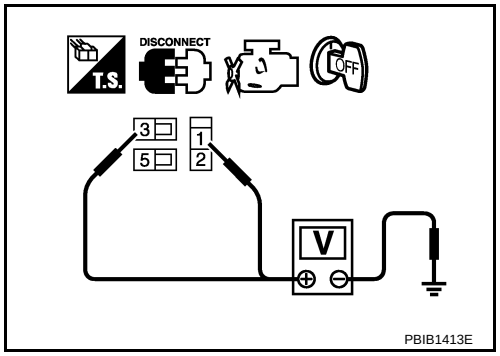

OK or NG

OK >> GO TO 3.
NG >> GO TO 2.

2. DETECT MALFUNCTIONING PART

Check the following.
- 60A fusible link (letter b)
- Harness for open and short between glow relay and battery

>> Repair open circuit or short to ground or short to power in harness or connectors.

3. CHECK GLOW RELAY OUTPUT SIGNAL CIRCUIT FOR SHORT TO GROUND

1. Disconnect ECM harness connector.
2. Check harness continuity between ECM terminal 37 and glow relay terminal 2. Refer to Wiring Diagram.

Continuity should exist.

3. Also check harness for short to ground and short to power.

OK or NG

OK >> GO TO 5.
NG >> GO TO 4.

4. DETECT MALFUNCTIONING PART

Check the following.
- Harness connectors E101, M5
- Harness for open and short between glow relay and ECM

>> Repair open circuit or short to ground or short to power in harness or connectors.

5. CHECK GLOW RELAY

Refer to EC-176, "Component Inspection".

OK or NG

OK >> GO TO 6.
NG >> Replace glow relay.

6. CHECK INTERMITTENT INCIDENT

Refer to EC-70.

>> **INSPECTION END**

Component Inspection

INFOID:0000000003759538

GLOW RELAY

Check continuity between glow relay terminals 3 and 5 under the following conditions.

Conditions	Continuity
12V direct current supply between terminals 1 and 2	Yes
No current supply	No

Operation takes less than 1 second.

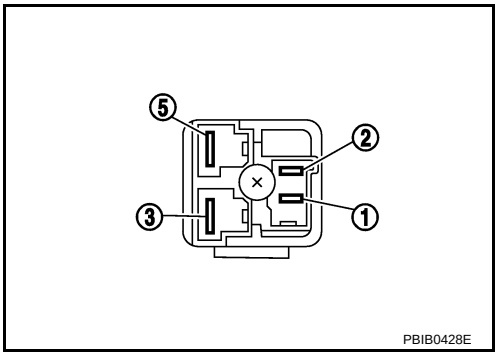

DTC P0403 EGR SYSTEM

Description

INFOID:0000000003759539

SYSTEM DESCRIPTION

Sensor	Input Signal to ECM	ECM Function	Actuator
Crankshaft position sensor	Engine speed	EGR volume control	EGR volume control valve
Engine coolant temperature sensor	Engine coolant temperature		
Mass air flow sensor	Amount of intake air		
Accelerator pedal position sensor	Accelerator pedal position		
Vehicle speed sensor	Vehicle speed*		
Ignition switch	Start signal		
Air conditioner switch	Air conditioner operation*		
Intake air temperature sensor	Intake air temperature		
Barometric pressure sensor	Barometric pressure		
EGR volume control valve control position sensor	EGR volume control valve control position		

*: This signal is sent to the ECM through CAN communication line.

This system controls the flow rate of EGR led from exhaust manifold to intake manifold. The opening of the EGR passage in the EGR volume control valve changes to control the EGR flow rate. A built-in DC motor moves the valve continuously corresponding to the ECM output signal. The EGR volume control valve control position sensor detects the valve position and sends the voltage signals to the ECM. The ECM judges the current opening angle of the valve from this signals and the ECM controls the DC motor to make the valve opening angle properly.

The opening of the valve varies for optimum engine control. The optimum value stored in the ECM is determined by considering various engine conditions.

The EGR volume control valve remains close under the following conditions.

- Engine stopped
- Engine starting
- Low engine coolant temperature
- Excessively high engine coolant temperature
- High engine speed
- Accelerator pedal fully depressed

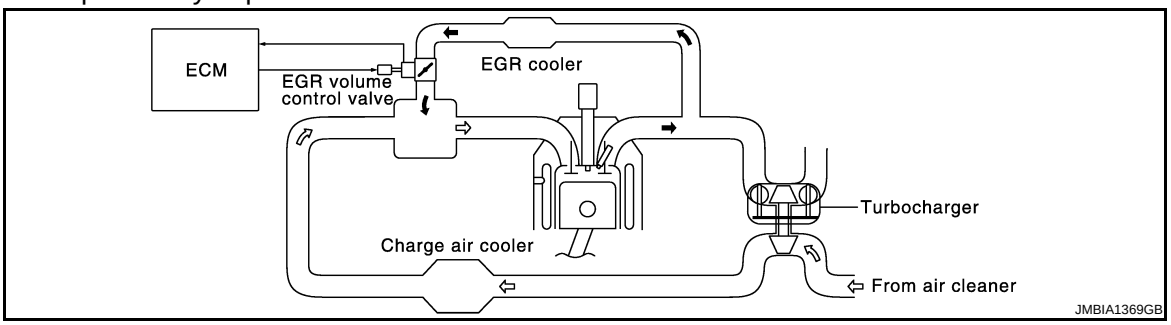

COMPONENT DESCRIPTION

EGR Volume Control Valve

The EGR volume control valve consists of valve, actuator and position sensor, etc. The valve is installed in EGR passage, and operated by the actuator according to the output signal of the ECM. The actuator used DC motor and it opens or closes the valve to change the EGR flow rate.
The EGR volume control valve control position sensor consists of a permanent magnet and Hall IC. It senses the valve shaft movement and feeds the voltage signals to the ECM.The ECM judges the current opening angle of the valve from this signals, and controls the DC motor to make the valve opening angle in response to driving conditions.

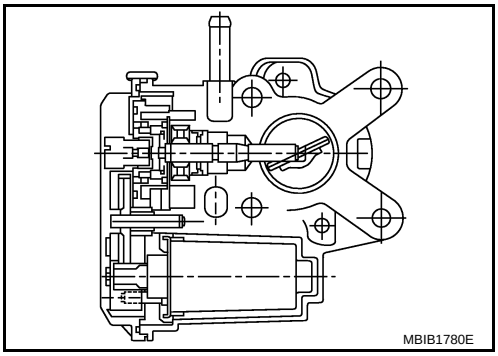

CONSULT-III Reference Value in Data Monitor Mode

INFOID:0000000003759540

Specification data are reference values.

MONITOR ITEM	CONDITION	SPECIFICATION
EGR/V ANGLE	• Ignition switch: ON (Engine stopped)	Approx. 0°
EGR V/POS SEN	• Ignition switch: ON (Engine stopped)	1,050 - 1,350 mV

On Board Diagnosis Logic

INFOID:0000000003759541

NOTE:
If DTC P0403 is displayed with DTC P0642 or P0643, first perform trouble diagnosis for DTC P0642 or P0643. Refer to EC-210.

DTC No.	Trouble diagnosis name	DTC detecting condition	Possible cause
P0403 0403	EGR volume control valve stuck	Excessively high duty voltage signal is sent to the valve for the specified time.	• Harness or connectors (The EGR volume control valve circuit is open or shorted.) • EGR volume control valve stuck closed • EGR passage clogged

DTC Confirmation Procedure

INFOID:0000000003759542

NOTE:
If DTC Confirmation Procedure has been previously conducted, always turn ignition switch OFF and wait at least 10 seconds before conducting the next test.

1. Start engine and warm it up to normal operating temperature.
2. Stop engine and wait at least 10 seconds.
3. Restart engine and let it idle for 5 seconds.
4. Check 1st trip DTC.
5. If 1st trip DTC is detected, go to EC-180, "Diagnosis Procedure".

Wiring Diagram

INFOID:0000000003759543

EC-EGRC1-01

: Detectable line for DTC
: Non-detectable line for DTC

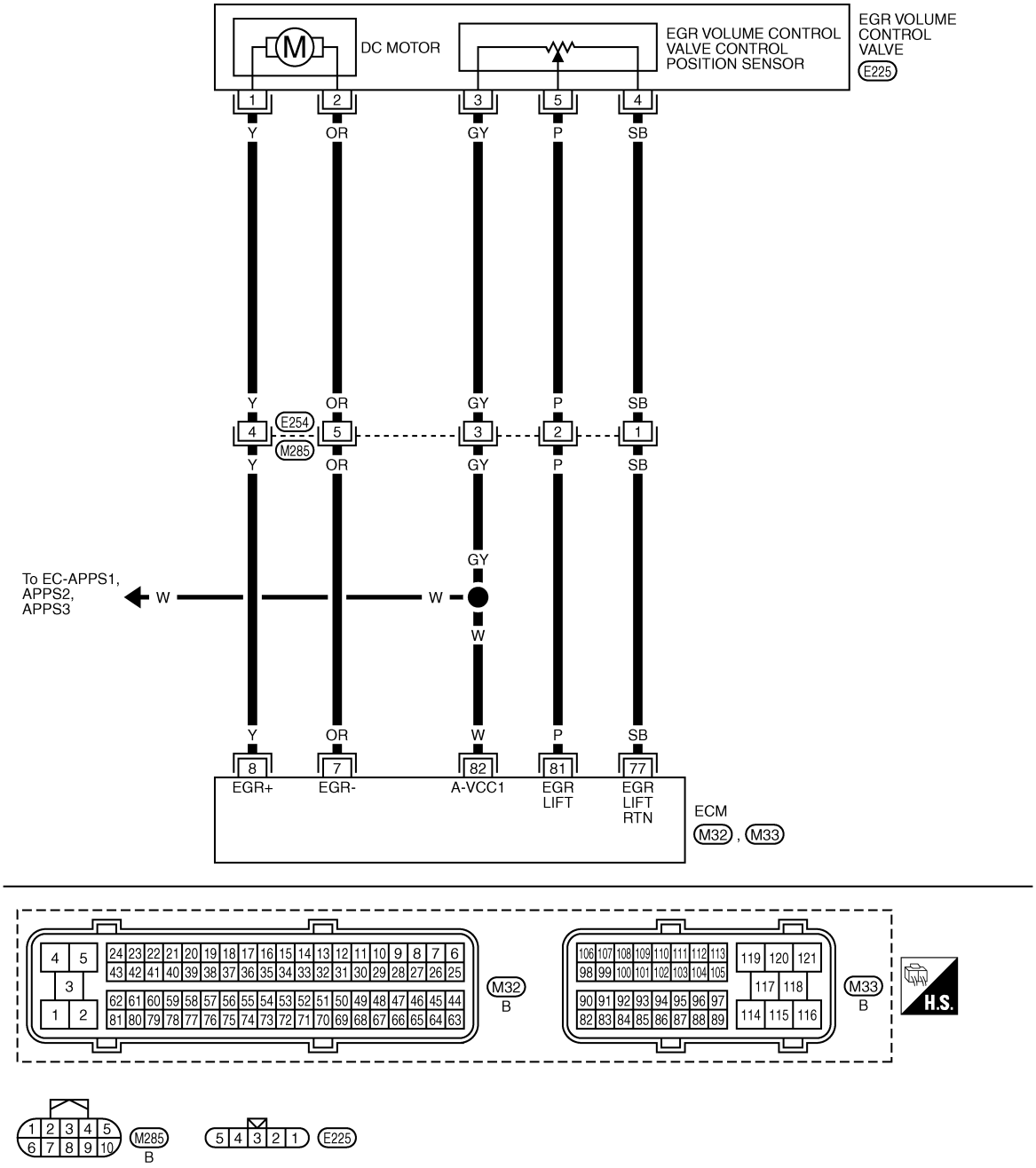

Specification data are reference values and are measured between each terminal and ground.
Pulse signal is measured by CONSULT-III.

TERMINAL NO. (Wire color)		Description	Condition	Value (Approx.)
+	–	Signal name		
7 (OR)	114 (B)	EGR volume control valve (Close)	**[Ignition switch OFF]** • **Warm-up condition** • For a few seconds after turning ignition switch OFF.	1.0 - 2.0 V★ ↑↓ (Periodically changes) BATTERY VOLTAGE (11 - 14 V) 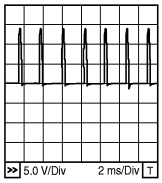 MBIB1783E
8 (Y)	114 (B)	EGR volume control valve (Open)	**[Ignition switch OFF]** • **Warm-up condition** • For a few seconds after turning ignition switch OFF.	1.0 - 2.0 V★ ↑↓ (Periodically changes) BATTERY VOLTAGE (11 - 14 V) 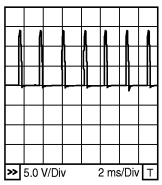 MBIB1783E
77 (SB)	—	EGR volume control valve control position sensor ground	—	—
81 (P)	77 (SB)	EGR volume control valve control position sensor	**[Ignition switch OFF]** • **Warm-up condition** • For a few seconds after turning ignition switch OFF.	Voltage should fluctuates between 0.5 and 2.5 V, then drop to 0 V.
82 (W)	77 (SB)	Sensor power supply (Accelerator pedal position sensor 1 / Crankshaft position sensor / EGR volume control valve control position sensor)	**[Ignition switch ON]**	Approximately 5 V

★: Average voltage for pulse signal (Actual pulse signal can be confirmed by oscilloscope.)

Diagnosis Procedure

INFOID:0000000003759544

1. CHECK GROUND CONNECTIONS

1. Turn ignition switch OFF.
2. Loosen and retighten ground screws on the body.
   Refer to EC-81, "Ground Inspection".

- Body ground M97 (1)
- Body ground M99 (2)
- ECM (3)

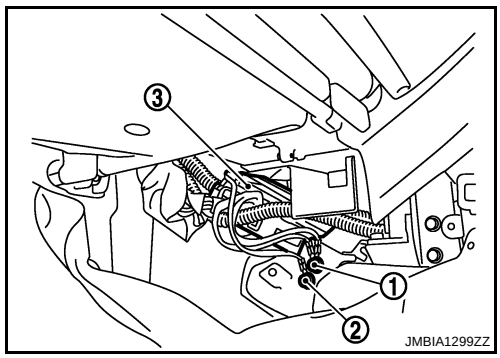

OK or NG

OK >> GO TO 2.
NG >> Repair or replace ground connections.

2. CHECK EGR VOLUME CONTROL VALVE CONTROL POSITION SENSOR POWER SUPPLY CIRCUIT

1. Turn ignition switch OFF.

2. Disconnect EGR volume control valve (1) harness connector.

⇦ : Vehicle front

3. Turn ignition switch ON.

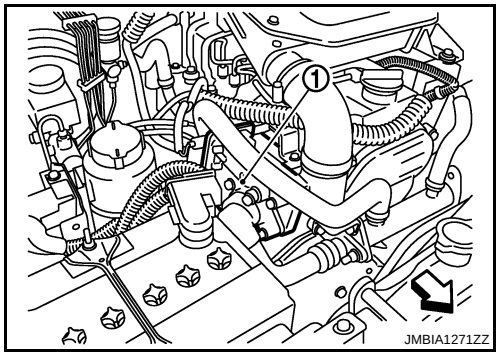

4. Check voltage between EGR volume control valve terminal 3 and ground with CONSULT-III or tester.

Voltage: Approximately 5 V

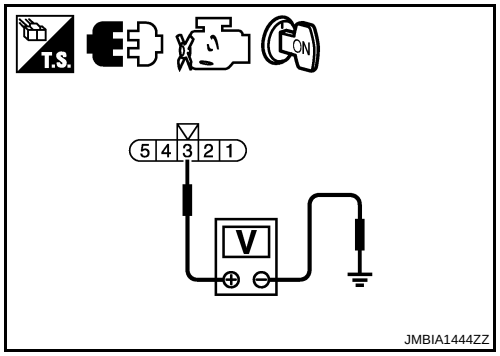

OK or NG

OK >> GO TO 4.
NG >> GO TO 3.

3. DETECT MALFUNCTIONING PART

Check the following.
- Harness connectors E254, M285
- Harness for open or short between EGR volume control valve and ECM

>> Repair open circuit or short to ground or short to power in harness or connectors.

4. CHECK EGR VOLUME CONTROL VALVE CONTROL POSITION SENSOR GROUND CIRCUIT FOR OPEN AND SHORT

1. Turn ignition switch OFF.
2. Disconnect ECM harness connector.
3. Check harness continuity between ECM terminal 77 and EGR volume control valve terminal 4. Refer to Wiring Diagram.

Continuity should exist.

4. Also check harness for short to ground and short to power.

OK or NG

OK >> GO TO 6.
NG >> GO TO 5.

5. DETECT MALFUNCTIONING PART

Check the following.
- Harness connectors E254, M285
- Harness for open or short between EGR volume control valve and ECM

>> Repair open circuit or short to ground or short to power in harness or connectors.

6. CHECK EGR VOLUME CONTROL VALVE CONTROL POSITION SENSOR INPUT SIGNAL CIRCUIT FOR OPEN AND SHORT

1. Check harness continuity between ECM terminal 81 and EGR volume control valve terminal 5. Refer to Wiring Diagram.

Continuity should exist.

2. Also check harness for short to ground and short to power.

OK or NG

OK >> GO TO 8.
NG >> GO TO 7.

7. DETECT MALFUNCTIONING PART

Check the following.
- Harness connectors E254, M285
- Harness for open or short between EGR volume control valve and ECM

>> Repair open circuit or short to ground or short to power in harness or connectors.

8. CHECK EGR VOLUME CONTROL VALVE OUTPUT SIGNAL CIRCUIT FOR OPEN AND SHORT

1. Check harness continuity between ECM terminals and EGR volume control valve terminals as follows. Refer to Wiring Diagram.

ECM terminal	EGR volume control valve terminal
7	2
8	1

Continuity should exist.

2. Also check harness for short to ground and short to power.

OK or NG

OK >> GO TO 10.
NG >> GO TO 9.

9. DETECT MALFUNCTIONING PART

Check the following.
- Harness connectors E254, M285
- Harness for open or short between EGR volume control valve and ECM

>> Repair open circuit or short to ground or short to power in harness or connectors.

10. CHECK EGR PASSAGE

Check the following for clogging and cracks.
- EGR tube
- EGR hose
- EGR cooler

OK or NG

OK >> GO TO 11.
NG >> Repair or replace EGR passage.

11. CHECK INTERMITTENT INCIDENT

Refer to EC-70.

OK or NG

OK >> GO TO 12.
NG >> Repair or replace.

12. REPLACE EGR VOLUME CONTROL VALVE

1. Replace the EGR volume control valve.
2. Perform EC-24, "EGR Volume Control Valve Closed Position Learning Value Clear".
3. Perform EC-24, "EGR Volume Control Valve Closed Position Learning".

>> **INSPECTION END**

Removal and Installation

INFOID:0000000003759545

EGR VOLUME CONTROL VALVE

Refer to EM-6.

DTC P0405, P0406 EGR SENSOR

Description

INFOID:0000000003759546

SYSTEM DESCRIPTION

Sensor	Input Signal to ECM	ECM Function	Actuator
Crankshaft position sensor	Engine speed	EGR volume control	EGR volume control valve
Engine coolant temperature sensor	Engine coolant temperature		
Mass air flow sensor	Amount of intake air		
Accelerator pedal position sensor	Accelerator pedal position		
Vehicle speed sensor	Vehicle speed*		
Ignition switch	Start signal		
Air conditioner switch	Air conditioner operation*		
Intake air temperature sensor	Intake air temperature		
Barometric pressure sensor	Barometric pressure		
EGR volume control valve control position sensor	EGR volume control valve control position		

*: This signal is sent to the ECM through CAN communication line.

This system controls the flow rate of EGR led from exhaust manifold to intake manifold. The opening of the EGR passage in the EGR volume control valve changes to control the EGR flow rate. A built-in DC motor moves the valve continuously corresponding to the ECM output signal. The EGR volume control valve control position sensor detects the valve position and sends the voltage signals to the ECM. The ECM judges the current opening angle of the valve from this signals and the ECM controls the DC motor to make the valve opening angle properly.

The opening of the valve varies for optimum engine control. The optimum value stored in the ECM is determined by considering various engine conditions.

The EGR volume control valve remains close under the following conditions.

- Engine stopped
- Engine starting
- Low engine coolant temperature
- Excessively high engine coolant temperature
- High engine speed
- Accelerator pedal fully depressed

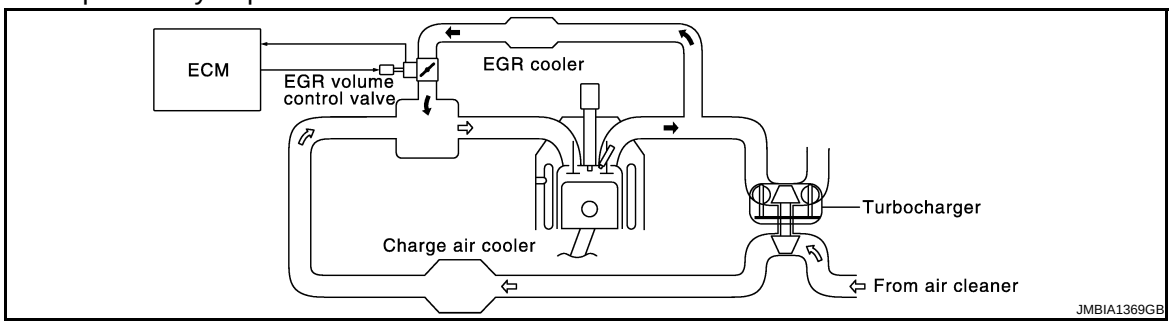

COMPONENT DESCRIPTION

EGR Volume Control Valve

The EGR volume control valve consists of valve, actuator and position sensor, etc. The valve is installed in EGR passage, and operated by the actuator according to the output signal of the ECM. The actuator used DC motor and it opens or closes the valve to change the EGR flow rate.
The EGR volume control valve control position sensor consists of a permanent magnet and Hall IC. It senses the valve shaft movement and feeds the voltage signals to the ECM.The ECM judges the current opening angle of the valve from this signals, and controls the DC motor to make the valve opening angle in response to driving conditions.

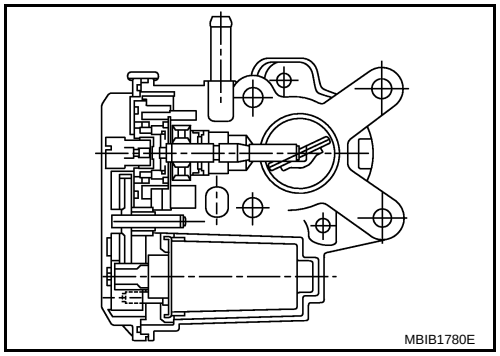

CONSULT-III Reference Value in Data Monitor Mode

INFOID:0000000003759547

Specification data are reference values.

MONITOR ITEM	CONDITION	SPECIFICATION
EGR/V ANGLE	• Ignition switch: ON (Engine stopped)	Approx. 0°
EGR V/POS SEN	• Ignition switch: ON (Engine stopped)	1,050 - 1,350 mV

On Board Diagnosis Logic

INFOID:0000000003759548

NOTE:
If DTC P0405, P0406 is displayed with DTC P0642 or P0643, first perform trouble diagnosis for DTC P0642 or P0643. Refer to EC-210.

DTC No.	Trouble diagnosis name	DTC detecting condition	Possible cause
P0405 0405	EGR volume control valve control position sensor circuit low input	An excessively low voltage from the sensor is sent to ECM.	• Harness or connectors (The sensor circuit is open or shorted.) • EGR volume control valve control position sensor
P0406 0406	EGR volume control valve control position sensor circuit high input	An excessively high voltage from the sensor is sent to ECM.	

DTC Confirmation Procedure

INFOID:0000000003759549

NOTE:
If DTC Confirmation Procedure has been previously conducted, always turn ignition switch OFF and wait at least 10 seconds before conducting the next test.

1. Start engine and warm it up to normal operating temperature.
2. Stop engine and wait at least 10 seconds.
3. Restart engine and let it idle for 5 seconds.
4. Check 1st trip DTC.
5. If 1st trip DTC is detected, go to EC-187, "Diagnosis Procedure".

Wiring Diagram

INFOID:0000000003759550

EC-EGRC3-01

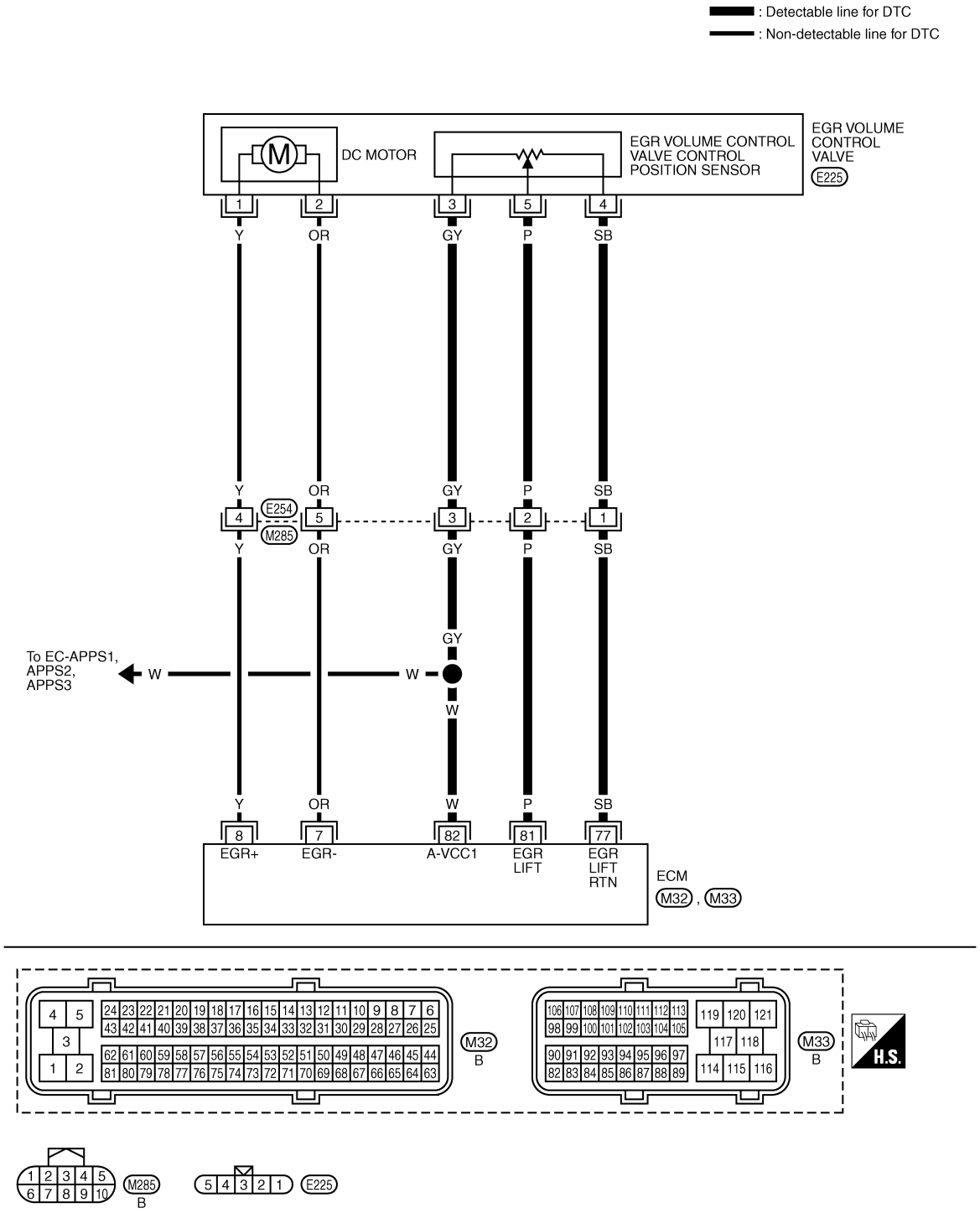

Specification data are reference values and are measured between each terminal and ground.
Pulse signal is measured by CONSULT-III.

TERMINAL NO. (Wire color)		Description	Condition	Value (Approx.)
+	–	Signal name		
7 (OR)	114 (B)	EGR volume control valve (Close)	**[Ignition switch OFF]** • **Warm-up condition** • For a few seconds after turning ignition switch OFF.	1.0 - 2.0 V★ ↑↓ (Periodically changes) BATTERY VOLTAGE (11 - 14 V) 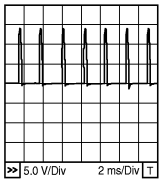 MBIB1783E
8 (Y)	114 (B)	EGR volume control valve (Open)	**[Ignition switch OFF]** • **Warm-up condition** • For a few seconds after turning ignition switch OFF.	1.0 - 2.0 V★ ↑↓ (Periodically changes) BATTERY VOLTAGE (11 - 14 V) 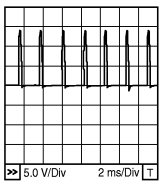 MBIB1783E
77 (SB)	—	EGR volume control valve control position sensor ground	—	—
81 (P)	77 (SB)	EGR volume control valve control position sensor	**[Ignition switch OFF]** • **Warm-up condition** • For a few seconds after turning ignition switch OFF.	Voltage should fluctuates between 0.5 and 2.5 V, then drop to 0 V.
82 (W)	77 (SB)	Sensor power supply (Accelerator pedal position sensor 1 / Crankshaft position sensor / EGR volume control valve control position sensor)	**[Ignition switch ON]**	Approximately 5 V

★: Average voltage for pulse signal (Actual pulse signal can be confirmed by oscilloscope.)

Diagnosis Procedure

INFOID:0000000003759551

1. CHECK GROUND CONNECTIONS

1. Turn ignition switch OFF.
2. Loosen and retighten ground screws on the body.
   Refer to EC-81, "Ground Inspection".

- Body ground M97 (1)
- Body ground M99 (2)
- ECM (3)

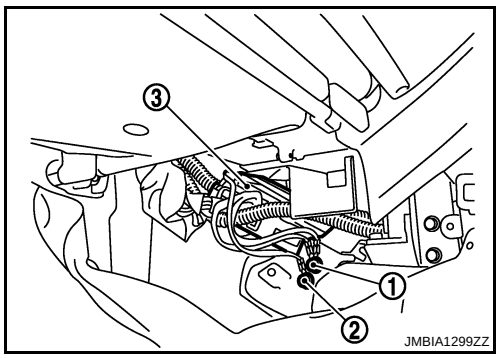

OK or NG

OK >> GO TO 2.
NG >> Repair or replace ground connections.

2. CHECK EGR VOLUME CONTROL VALVE CONTROL POSITION SENSOR POWER SUPPLY CIRCUIT

1. Turn ignition switch OFF.

2. Disconnect EGR volume control valve (1) harness connector.

⇦ : Vehicle front

3. Turn ignition switch ON.

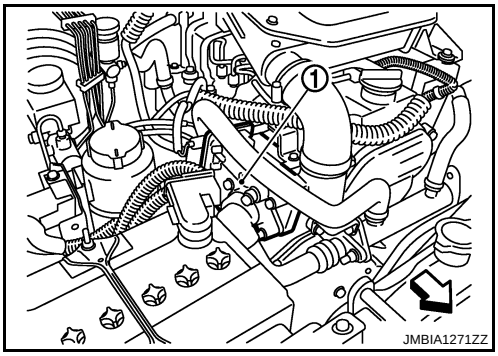

4. Check voltage between EGR volume control valve terminal 3 and ground with CONSULT-III or tester.

Voltage: Approximately 5 V

OK or NG

OK >> GO TO 4.
NG >> GO TO 3.

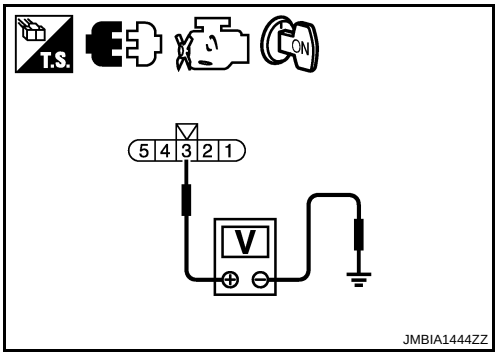

3. DETECT MALFUNCTIONING PART

Check the following.
- Harness connectors E254, M285
- Harness for open or short between EGR volume control valve and ECM

>> Repair open circuit or short to ground or short to power in harness or connectors.

4. CHECK EGR VOLUME CONTROL VALVE CONTROL POSITION SENSOR GROUND CIRCUIT FOR OPEN AND SHORT

1. Turn ignition switch OFF.
2. Disconnect ECM harness connector.
3. Check harness continuity between ECM terminal 77 and EGR volume control valve terminal 4. Refer to Wiring Diagram.

Continuity should exist.

4. Also check harness for short to ground and short to power.

OK or NG

OK >> GO TO 6.
NG >> GO TO 5.

5. DETECT MALFUNCTIONING PART

Check the following.
- Harness connectors E254, M285
- Harness for open or short between EGR volume control valve and ECM

>> Repair open circuit or short to ground or short to power in harness or connectors.

6. CHECK EGR VOLUME CONTROL VALVE CONTROL POSITION SENSOR INPUT SIGNAL CIRCUIT FOR OPEN AND SHORT

1. Check harness continuity between ECM terminal 81 and EGR volume control valve terminal 5. Refer to Wiring Diagram.

Continuity should exist.

2. Also check harness for short to ground and short to power.

OK or NG

OK >> GO TO 8.
NG >> GO TO 7.

7. DETECT MALFUNCTIONING PART

Check the following.
- Harness connectors E254, M285
- Harness for open or short between EGR volume control valve and ECM

>> Repair open circuit or short to ground or short to power in harness or connectors.

8. CHECK INTERMITTENT INCIDENT

Refer to EC-70.

OK or NG

OK >> GO TO 9.
NG >> Repair or replace.

9. REPLACE EGR VOLUME CONTROL VALVE

1. Replace the EGR volume control valve.
2. Perform EC-24, "EGR Volume Control Valve Closed Position Learning Value Clear".
3. Perform EC-24, "EGR Volume Control Valve Closed Position Learning".

>> **INSPECTION END**

Removal and Installation

INFOID:0000000003759552

EGR VOLUME CONTROL VALVE

Refer to EM-6.

DTC P0409 EGR SYSTEM

Description

INFOID:0000000003759553

SYSTEM DESCRIPTION

Sensor	Input Signal to ECM	ECM Function	Actuator
Crankshaft position sensor	Engine speed	EGR volume control	EGR volume control valve
Engine coolant temperature sensor	Engine coolant temperature		
Mass air flow sensor	Amount of intake air		
Accelerator pedal position sensor	Accelerator pedal position		
Vehicle speed sensor	Vehicle speed*		
Ignition switch	Start signal		
Air conditioner switch	Air conditioner operation*		
Intake air temperature sensor	Intake air temperature		
Barometric pressure sensor	Barometric pressure		
EGR volume control valve control position sensor	EGR volume control valve control position		

*: This signal is sent to the ECM through CAN communication line.

This system controls the flow rate of EGR led from exhaust manifold to intake manifold. The opening of the EGR passage in the EGR volume control valve changes to control the EGR flow rate. A built-in DC motor moves the valve continuously corresponding to the ECM output signal. The EGR volume control valve control position sensor detects the valve position and sends the voltage signals to the ECM. The ECM judges the current opening angle of the valve from this signals and the ECM controls the DC motor to make the valve opening angle properly.

The opening of the valve varies for optimum engine control. The optimum value stored in the ECM is determined by considering various engine conditions.

The EGR volume control valve remains close under the following conditions.

- Engine stopped
- Engine starting
- Low engine coolant temperature
- Excessively high engine coolant temperature
- High engine speed
- Accelerator pedal fully depressed

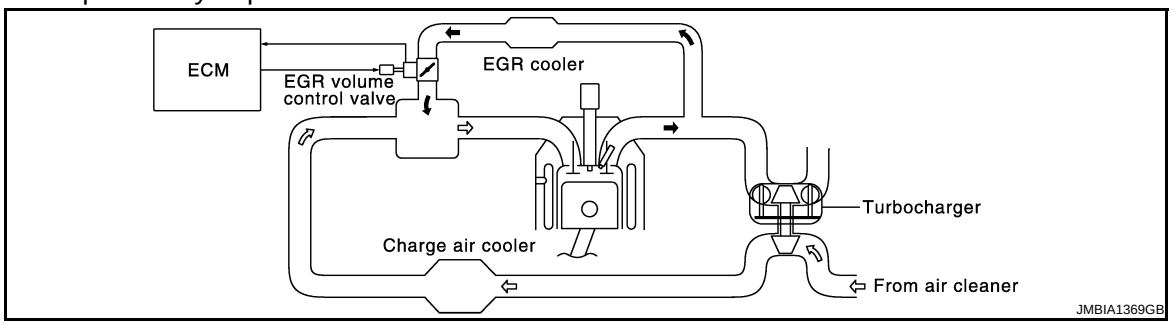

COMPONENT DESCRIPTION

EGR Volume Control Valve

The EGR volume control valve consists of valve, actuator and position sensor, etc. The valve is installed in EGR passage, and operated by the actuator according to the output signal of the ECM. The actuator used DC motor and it opens or closes the valve to change the EGR flow rate.
The EGR volume control valve control position sensor consists of a permanent magnet and Hall IC. It senses the valve shaft movement and feeds the voltage signals to the ECM.The ECM judges the current opening angle of the valve from this signals, and controls the DC motor to make the valve opening angle in response to driving conditions.

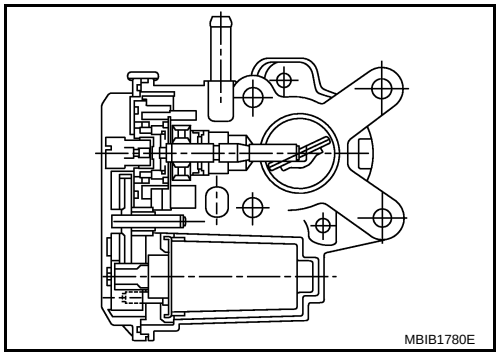

CONSULT-III Reference Value in Data Monitor Mode

INFOID:0000000003759554

Specification data are reference values.

MONITOR ITEM	CONDITION	SPECIFICATION
EGR/V ANGLE	• Ignition switch: ON (Engine stopped)	Approx. 0°
EGR V/POS SEN	• Ignition switch: ON (Engine stopped)	1,050 - 1,350 mV

On Board Diagnosis Logic

INFOID:0000000003759555

NOTE:
If DTC P0409 is displayed with DTC P0642 or P0643, first perform trouble diagnosis for DTC P0642 or P0643. Refer to EC-210.

DTC No.	Trouble diagnosis name	DTC detecting condition	Possible cause
P0409 0409	EGR volume control valve does not operate properly.	The characteristic of EGR volume control valve is not in the specified range.	• Harness or connectors (EGR volume control valve circuit is open or shorted.) • EGR volume control valve

DTC Confirmation Procedure

INFOID:0000000003759556

NOTE:
If DTC Confirmation Procedure has been previously conducted, always turn ignition switch OFF and wait at least 10 seconds before conducting the next test.

WITH CONSULT-III

1. Start engine and warm it up to normal operating temperature.
2. Select “DATA MONITOR” mode with CONSULT-III.
3. Confirm that engine coolant temperature is more than 81°C (178°F).
4. Stop engine and wait at least 10 seconds.
5. Restart engine and let it idle for 5 seconds.
6. Check 1st trip DTC.
7. If 1st trip DTC is detected, go to EC-193, "Diagnosis Procedure".

WITH GST

Follow the procedure “WITH CONSULT-III” above.

Wiring Diagram

INFOID:0000000003759557

EC-EGRC1-01

: Detectable line for DTC
: Non-detectable line for DTC

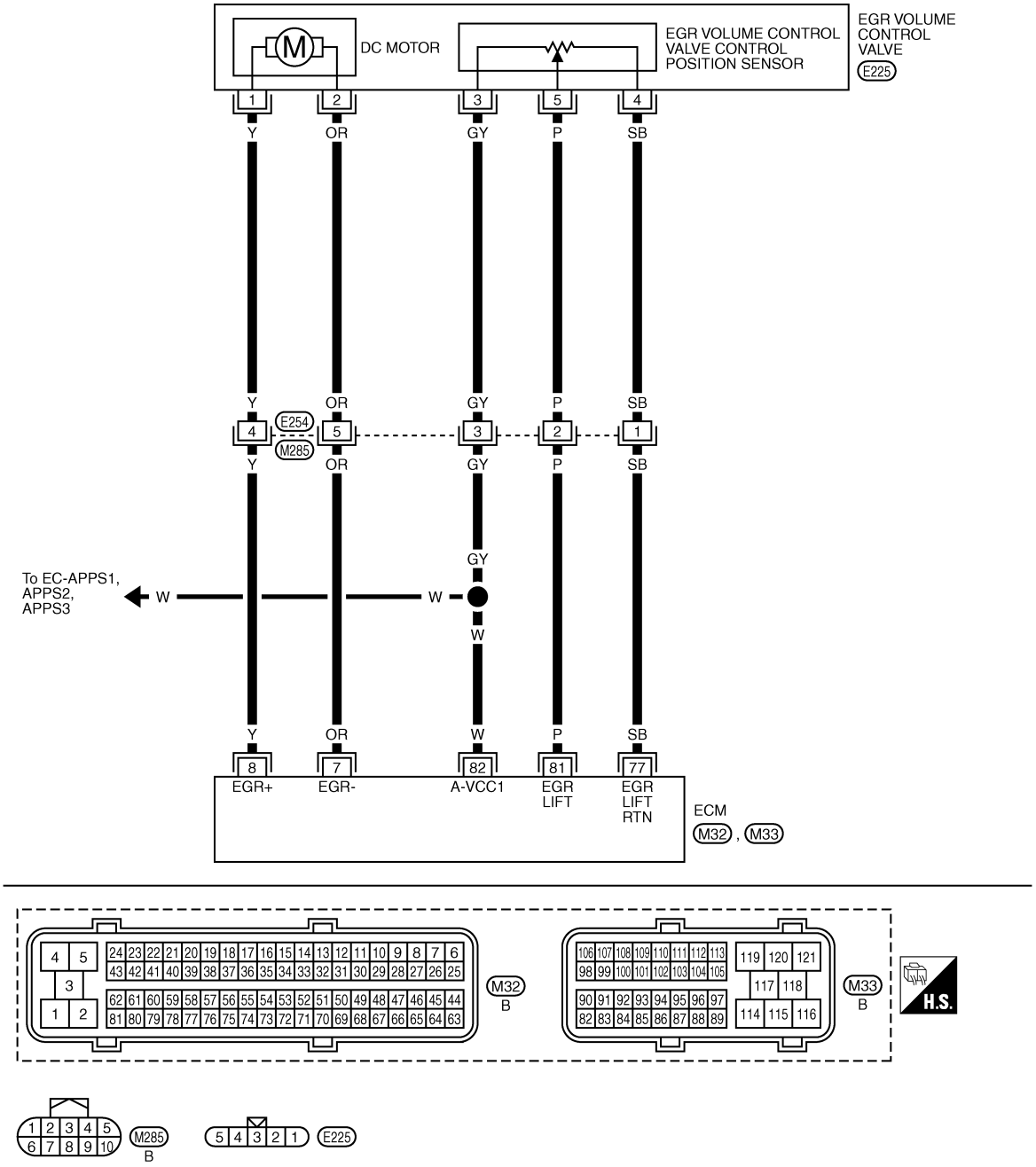

Specification data are reference values and are measured between each terminal and ground.
Pulse signal is measured by CONSULT-III.

TERMINAL NO. (Wire color)		Description	Condition	Value (Approx.)
+	–	Signal name		
7 (OR)	114 (B)	EGR volume control valve (Close)	**[Ignition switch OFF]** • **Warm-up condition** • For a few seconds after turning ignition switch OFF.	1.0 - 2.0 V★ ↑↓ (Periodically changes) BATTERY VOLTAGE (11 - 14 V) 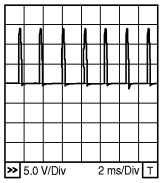 MBIB1783E
8 (Y)	114 (B)	EGR volume control valve (Open)	**[Ignition switch OFF]** • **Warm-up condition** • For a few seconds after turning ignition switch OFF.	1.0 - 2.0 V★ ↑↓ (Periodically changes) BATTERY VOLTAGE (11 - 14 V) 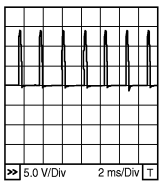 MBIB1783E
77 (SB)	—	EGR volume control valve control position sensor ground	—	—
81 (P)	77 (SB)	EGR volume control valve control position sensor	**[Ignition switch OFF]** • **Warm-up condition** • For a few seconds after turning ignition switch OFF.	Voltage should fluctuates between 0.5 and 2.5 V, then drop to 0 V.
82 (W)	77 (SB)	Sensor power supply (Accelerator pedal position sensor 1 / Crankshaft position sensor / EGR volume control valve control position sensor)	**[Ignition switch ON]**	Approximately 5 V

★: Average voltage for pulse signal (Actual pulse signal can be confirmed by oscilloscope.)

Diagnosis Procedure

INFOID:0000000003759558

1. CHECK GROUND CONNECTIONS

1. Turn ignition switch OFF.
2. Loosen and retighten ground screws on the body.
   Refer to EC-81, "Ground Inspection".

- Body ground M97 (1)
- Body ground M99 (2)
- ECM (3)

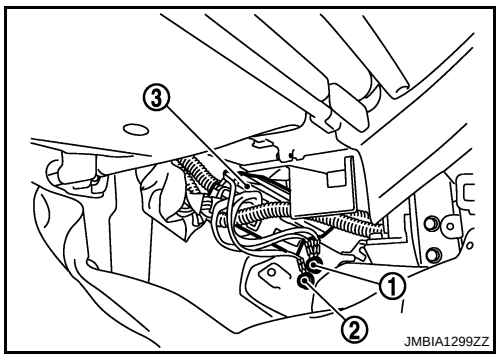

OK or NG

OK >> GO TO 2.
NG >> Repair or replace ground connections.

2. CHECK EGR VOLUME CONTROL VALVE CONTROL POSITION SENSOR POWER SUPPLY CIRCUIT

1. Turn ignition switch OFF.

2. Disconnect EGR volume control valve (1) harness connector.

⇦ : Vehicle front

3. Turn ignition switch ON.

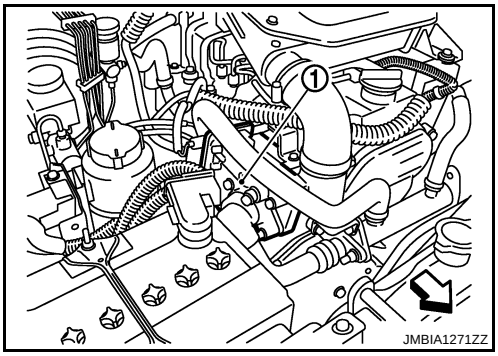

4. Check voltage between EGR volume control valve terminal 3 and ground with CONSULT-III or tester.

Voltage: Approximately 5 V

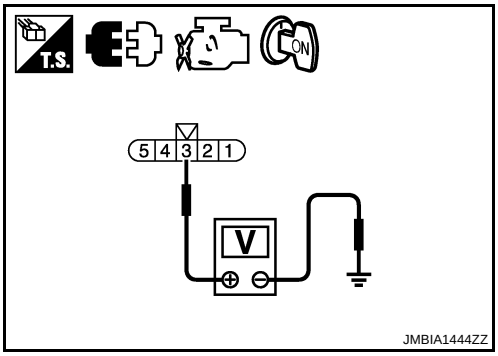

OK or NG

OK >> GO TO 4.
NG >> GO TO 3.

3. DETECT MALFUNCTIONING PART

Check the following.
- Harness connectors E254, M285
- Harness for open or short between EGR volume control valve and ECM

>> Repair open circuit or short to ground or short to power in harness or connectors.

4. CHECK EGR VOLUME CONTROL VALVE CONTROL POSITION SENSOR GROUND CIRCUIT FOR OPEN AND SHORT

1. Turn ignition switch OFF.
2. Disconnect ECM harness connector.
3. Check harness continuity between ECM terminal 77 and EGR volume control valve terminal 4. Refer to Wiring Diagram.

Continuity should exist.

4. Also check harness for short to ground and short to power.

OK or NG

OK >> GO TO 6.
NG >> GO TO 5.

5. DETECT MALFUNCTIONING PART

Check the following.
- Harness connectors E254, M285
- Harness for open or short between EGR volume control valve and ECM

>> Repair open circuit or short to ground or short to power in harness or connectors.

6. CHECK EGR VOLUME CONTROL VALVE CONTROL POSITION SENSOR INPUT SIGNAL CIRCUIT FOR OPEN AND SHORT

1. Check harness continuity between ECM terminal 81 and EGR volume control valve terminal 5. Refer to Wiring Diagram.

Continuity should exist.

2. Also check harness for short to ground and short to power.

OK or NG

OK >> GO TO 8.
NG >> GO TO 7.

7. DETECT MALFUNCTIONING PART

Check the following.
- Harness connectors E254, M285
- Harness for open or short between EGR volume control valve and ECM

>> Repair open circuit or short to ground or short to power in harness or connectors.

8. CHECK EGR VOLUME CONTROL VALVE OUTPUT SIGNAL CIRCUIT FOR OPEN AND SHORT

1. Check harness continuity between ECM terminals and EGR volume control valve terminals as follows. Refer to Wiring Diagram.

ECM terminal	EGR volume control valve terminal
7	2
8	1

Continuity should exist.

2. Also check harness for short to ground and short to power.

OK or NG

OK >> GO TO 10.
NG >> GO TO 9.

9. DETECT MALFUNCTIONING PART

Check the following.
- Harness connectors E254, M285
- Harness for open or short between EGR volume control valve and ECM

>> Repair open circuit or short to ground or short to power in harness or connectors.

10. CHECK INTERMITTENT INCIDENT

Refer to EC-70.

OK or NG

OK >> GO TO 11.
NG >> Repair or replace.

11. REPLACE EGR VOLUME CONTROL VALVE

1. Replace the EGR volume control valve.
2. Perform EC-24, "EGR Volume Control Valve Closed Position Learning Value Clear".
3. Perform EC-24, "EGR Volume Control Valve Closed Position Learning".

>> **INSPECTION END**

Removal and Installation

INFOID:0000000003759559

EGR VOLUME CONTROL VALVE

Refer to EM-6.

DTC P0488 EGR SYSTEM

Description

INFOID:0000000003759601

SYSTEM DESCRIPTION

Sensor	Input Signal to ECM	ECM Function	Actuator
Crankshaft position sensor	Engine speed	EGR volume control	EGR volume control valve
Engine coolant temperature sensor	Engine coolant temperature		
Mass air flow sensor	Amount of intake air		
Accelerator pedal position sensor	Accelerator pedal position		
Vehicle speed sensor	Vehicle speed*		
Ignition switch	Start signal		
Air conditioner switch	Air conditioner operation*		
Intake air temperature sensor	Intake air temperature		
Barometric pressure sensor	Barometric pressure		
EGR volume control valve control position sensor	EGR volume control valve control position		

*: This signal is sent to the ECM through CAN communication line.

This system controls the flow rate of EGR led from exhaust manifold to intake manifold. The opening of the EGR passage in the EGR volume control valve changes to control the EGR flow rate. A built-in DC motor moves the valve continuously corresponding to the ECM output signal. The EGR volume control valve control position sensor detects the valve position and sends the voltage signals to the ECM. The ECM judges the current opening angle of the valve from this signals and the ECM controls the DC motor to make the valve opening angle properly.

The opening of the valve varies for optimum engine control. The optimum value stored in the ECM is determined by considering various engine conditions.

The EGR volume control valve remains close under the following conditions.

- Engine stopped
- Engine starting
- Low engine coolant temperature
- Excessively high engine coolant temperature
- High engine speed
- Accelerator pedal fully depressed

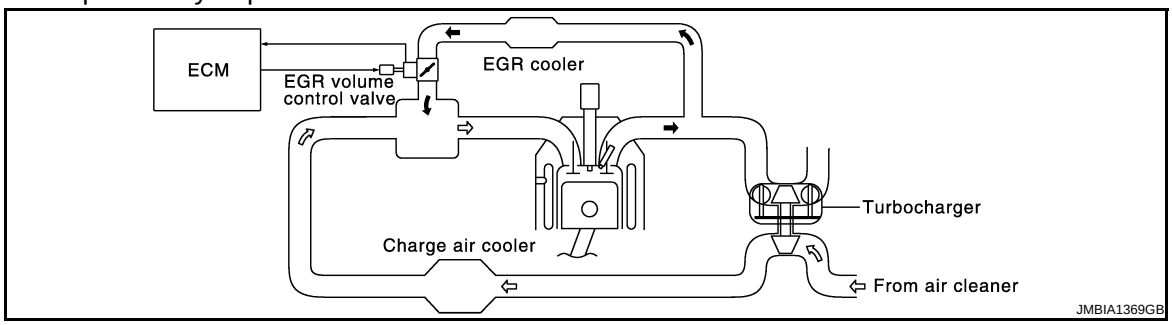

COMPONENT DESCRIPTION

EGR Volume Control Valve

The EGR volume control valve consists of valve, actuator and position sensor, etc. The valve is installed in EGR passage, and operated by the actuator according to the output signal of the ECM. The actuator used DC motor and it opens or closes the valve to change the EGR flow rate.
The EGR volume control valve control position sensor consists of a permanent magnet and Hall IC. It senses the valve shaft movement and feeds the voltage signals to the ECM.The ECM judges the current opening angle of the valve from this signals, and controls the DC motor to make the valve opening angle in response to driving conditions.

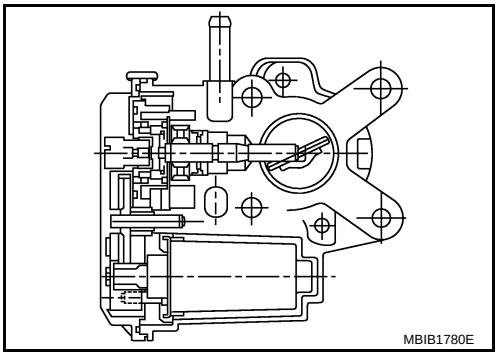

CONSULT-III Reference Value in Data Monitor Mode

INFOID:0000000003759602

Specification data are reference values.

MONITOR ITEM	CONDITION		SPECIFICATION
EGR/V ANGLE	• Ignition switch: ON (Engine stopped)		Approx. 0°
EGR V/POS SEN	• Ignition switch: ON (Engine stopped)		1,050 - 1,350 mV

On Board Diagnosis Logic

INFOID:0000000003759603

NOTE:
If DTC P0488 is displayed with DTC P0642 or P0643, first perform trouble diagnosis for DTC P0642 or P0643. Refer to EC-210.

DTC No.	Trouble diagnosis name	DTC detecting condition	Possible cause
P0488 0488	EGR driving circuit does not function properly.	The ECM internal circuit for driving the EGR volume control valve does not function properly due to high temperature or excessive current.	• Harness or connectors (The EGR volume control valve circuit is shorted.) • EGR volume control valve • ECM

DTC Confirmation Procedure

INFOID:0000000003759604

NOTE:
If DTC Confirmation Procedure has been previously conducted, always turn ignition switch OFF and wait at least 10 seconds before conducting the next test.

1. Start engine and warm it up to normal operating temperature.
2. Stop engine and wait at least 10 seconds.
3. Restart engine and let it idle for 5 seconds.
4. Check 1st trip DTC.
5. If 1st trip DTC is detected, go to EC-199, "Diagnosis Procedure".

Wiring Diagram

INFOID:0000000003759605

EC-EGRC2-01

: Detectable line for DTC
: Non-detectable line for DTC

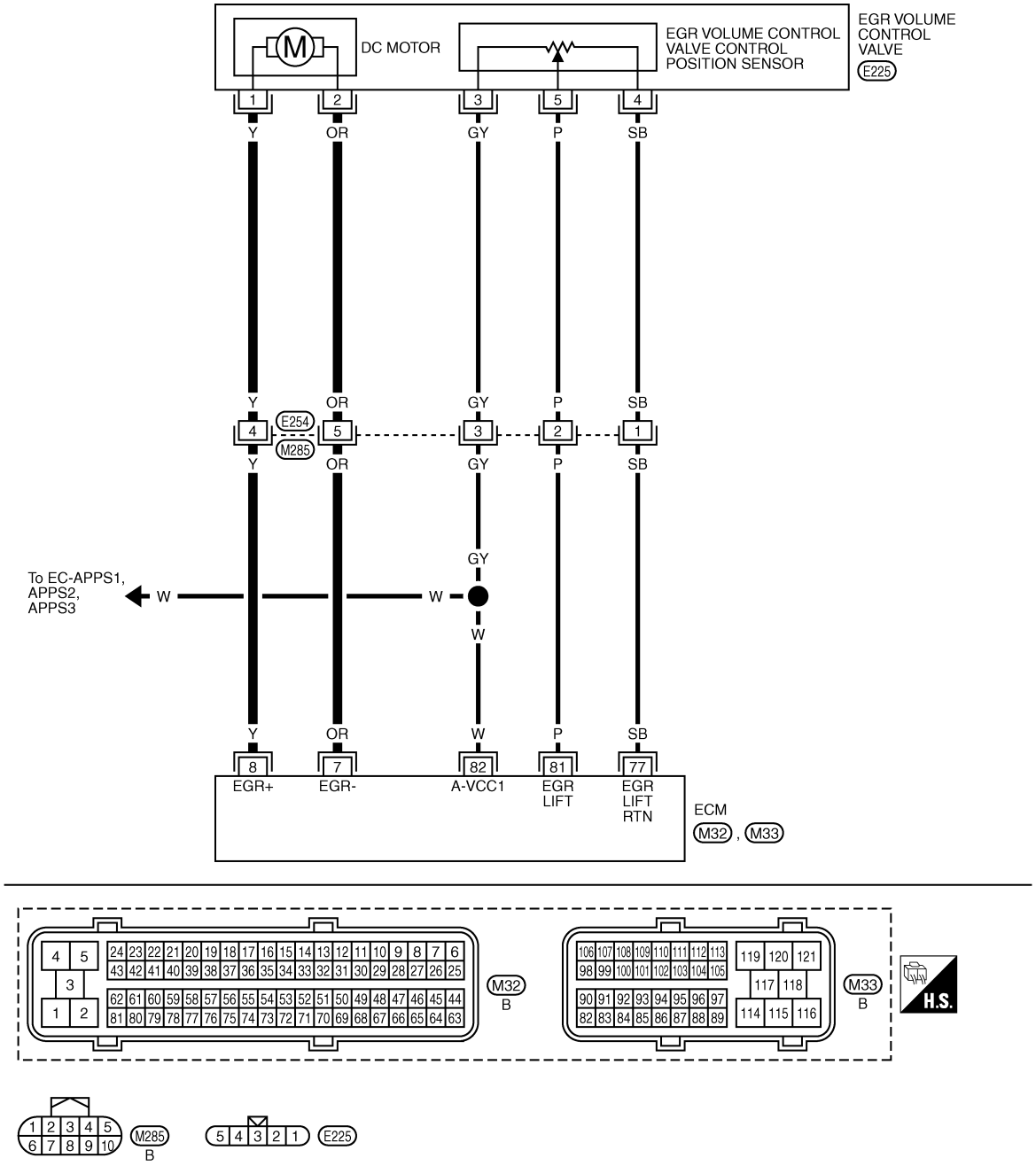

GEC618A

Specification data are reference values and are measured between each terminal and ground.
Pulse signal is measured by CONSULT-III.

TERMINAL NO. (Wire color)		Description	Condition	Value (Approx.)
+	–	Signal name		
7 (OR)	114 (B)	EGR volume control valve (Close)	**[Ignition switch OFF]** • **Warm-up condition** • For a few seconds after turning ignition switch OFF.	1.0 - 2.0 V★ ↑↓ (Periodically changes) BATTERY VOLTAGE (11 - 14 V) 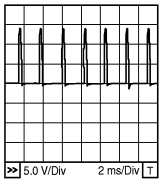 MBIB1783E
8 (Y)	114 (B)	EGR volume control valve (Open)	**[Ignition switch OFF]** • **Warm-up condition** • For a few seconds after turning ignition switch OFF.	1.0 - 2.0 V★ ↑↓ (Periodically changes) BATTERY VOLTAGE (11 - 14 V) 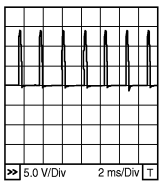 MBIB1783E
77 (SB)	—	EGR volume control valve control position sensor ground	—	—
81 (P)	77 (SB)	EGR volume control valve control position sensor	**[Ignition switch OFF]** • **Warm-up condition** • For a few seconds after turning ignition switch OFF.	Voltage should fluctuates between 0.5 and 2.5 V, then drop to 0 V.
82 (W)	77 (SB)	Sensor power supply (Accelerator pedal position sensor 1 / Crankshaft position sensor / EGR volume control valve control position sensor)	**[Ignition switch ON]**	Approximately 5 V

★: Average voltage for pulse signal (Actual pulse signal can be confirmed by oscilloscope.)

Diagnosis Procedure

INFOID:0000000003759606

1. CHECK GROUND CONNECTIONS

1. Turn ignition switch OFF.
2. Loosen and retighten ground screws on the body.
   Refer to EC-81, "Ground Inspection".

- Body ground M97 (1)
- Body ground M99 (2)
- ECM (3)

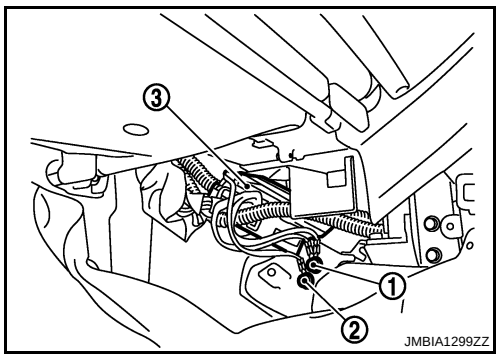

OK or NG

OK >> GO TO 2.
NG >> Repair or replace ground connections.

2. CHECK EGR VOLUME CONTROL VALVE OUTPUT SIGNAL CIRCUIT FOR OPEN AND SHORT

1. Disconnect EGR volume control valve (1) harness connector.

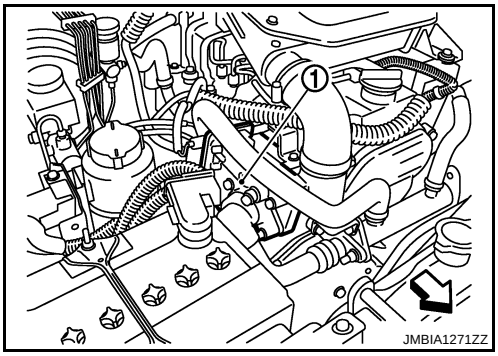

⇦ : Vehicle front

2. Disconnect ECM harness connector.
3. Check harness continuity between ECM terminals and EGR volume control valve terminals as follows.
   Refer to Wiring Diagram.

ECM terminal	EGR volume control valve terminal
7	2
8	1

Continuity should exist.

4. Also check harness for short to ground and short to power.

OK or NG

OK >> GO TO 3.
NG >> Repair open circuit or short to ground or short to power in harness or connectors.

3. CHECK INTERMITTENT INCIDENT

Refer to EC-70.

OK or NG

OK >> GO TO 4.
NG >> Repair or replace.

4. REPLACE EGR VOLUME CONTROL VALVE

1. Replace the EGR volume control valve.
2. Perform EC-24, "EGR Volume Control Valve Closed Position Learning Value Clear".
3. Perform EC-24, "EGR Volume Control Valve Closed Position Learning".

>> **INSPECTION END**

Removal and Installation

INFOID:0000000003759607

EGR VOLUME CONTROL VALVE

Refer to EM-6.

DTC P0563 BATTERY VOLTAGE

On Board Diagnosis Logic

INFOID:0000000003759627

This self-diagnosis has the one trip detection logic.
MI will not light up for this self-diagnosis.

DTC No.	Trouble diagnosis name	DTC detecting condition	Possible cause
P0563 0563	Battery voltage high	An excessively high voltage from the battery is sent to ECM.	• Battery • Battery terminal • Alternator • Incorrect jump starting

DTC Confirmation Procedure

INFOID:0000000003759628

NOTE:
If DTC Confirmation Procedure has been previously conducted, always turn ignition switch OFF and wait at least 10 seconds before conducting the next test.

1. Start engine and let it idle for at least 35 seconds.
2. Check DTC.
3. If DTC is detected, go to EC-201, "Diagnosis Procedure".

Diagnosis Procedure

INFOID:0000000003759629

1. INSPECTION START

Are jumper cables connected for the jump starting?

Yes or No

Yes >> GO TO 3.
No >> GO TO 2.

2. CHECK BATTERY AND ALTERNATOR

Check that the proper type of battery and type of alternator are installed.
Refer to "BATTERY" and "CHARGING SYSTEM" in EL section.

OK or NG

OK >> GO TO 5.
NG >> Replace with a proper one.

3. CHECK JUMPER CABLES INSTALLATION

Check that the jumper cables are connected in the correct sequence.

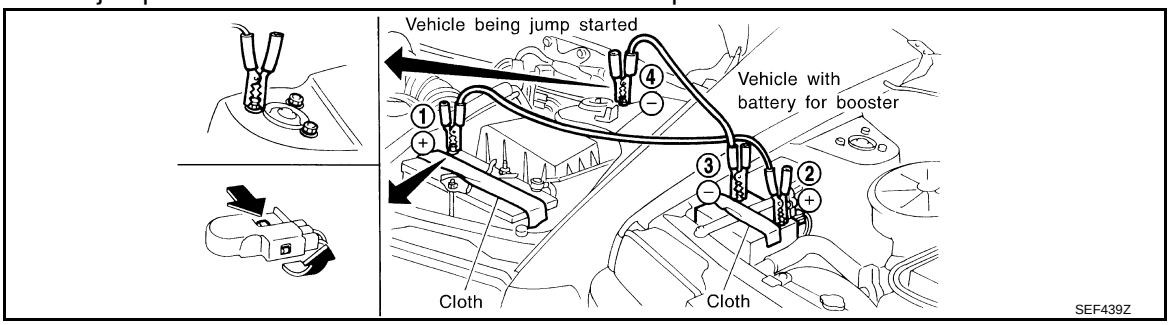

OK or NG

OK >> GO TO 4.
NG >> Reconnect jumper cables properly.

4. CHECK BATTERY FOR BOOSTER

Check that the battery for the booster is a 12 V battery.

OK or NG

OK >> GO TO 5.

NG >> Change the vehicle for booster.

5. PERFORM DTC CONFIRMATION PROCEDURE AGAIN

With CONSULT-III

1. Turn ignition switch ON.
2. Select “SELF DIAG RESULTS” mode with CONSULT-III.
3. Touch “ERASE”.
4. Perform EC-201, "DTC Confirmation Procedure", again.
5. Is DTC P0563 displayed again?

With GST

1. Turn ignition switch ON.
2. Select Service $04 with GST.
3. Perform EC-201, "DTC Confirmation Procedure", again.
4. Is DTC P0563 displayed again?

Yes or No

Yes >> GO TO 6.
No >> GO TO 7.

6. REPLACE ECM

1. Replace ECM.
2. Perform initialization of NATS system and registration of all NATS ignition key IDs. Refer to EL-96, "ECM Re-communicating Function".
3. Perform Injector Adjustment Value Registration. Refer to EC-22, "Injector Adjustment Value Registration".
4. Perform Fuel Pump Learning Value Clearing. Refer to EC-23, "Fuel Pump Learning Value Clearing".
5. Perform EGR Volume Control Valve Closed Position Learning Value Clear. Refer to EC-24, "EGR Volume Control Valve Closed Position Learning Value Clear".
6. Perform EGR Volume Control Valve Closed Position Learning. Refer to EC-24, "EGR Volume Control Valve Closed Position Learning".

>> **INSPECTION END**

7. CHECK ELECTRICAL PARTS DAMAGE

Check the following for damage.

- Wiring harness and harness connectors for burn
- Fuses for short

OK or NG

OK >> **INSPECTION END**
NG >> Repair or replace malfunctioning part.

DTC P0606 ECM

Description

INFOID:0000000003759644

The ECM consists of a microcomputer and connectors for signal input and output and for power supply. The ECM controls the engine.

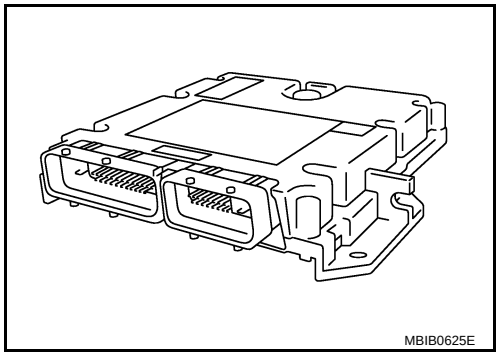

On Board Diagnosis Logic

INFOID:0000000003759645

DTC No.	Trouble diagnosis name	DTC detecting condition	Possible cause
P0606 0606	Engine control module (Processor)	ECM calculation function is malfunctioning.	• ECM

DTC Confirmation Procedure

INFOID:0000000003759646

NOTE:
If DTC Confirmation Procedure has been previously conducted, always turn ignition switch OFF and wait at least 10 seconds before conducting the next test.

1. Turn ignition switch ON.
2. Wait at least 5 seconds.
3. Check 1st trip DTC.
4. If 1st trip DTC is detected, go to EC-203, "Diagnosis Procedure".

Diagnosis Procedure

INFOID:0000000003759647

1. INSPECTION START

With CONSULT-III

1. Turn ignition switch ON.
2. Select “SELF DIAG RESULTS” mode with CONSULT-III.
3. Touch “ERASE”.
4. Perform EC-203, "DTC Confirmation Procedure", again.
5. Is 1st trip DTC P0606 displayed again?

With GST

1. Turn ignition switch ON.
2. Select Service $04 with GST.
3. Perform EC-203, "DTC Confirmation Procedure", again.
4. Is 1st trip DTC P0606 displayed again?

Yes or No

Yes >> GO TO 2.
No >> **INSPECTION END**

2. REPLACE ECM

1. Replace ECM.
2. Perform initialization of NATS system and registration of all NATS ignition key IDs. Refer to EL-96, "ECM Re-communicating Function".
3. Perform Injector Adjustment Value Registration. Refer to EC-22, "Injector Adjustment Value Registration".
4. Perform Fuel Pump Learning Value Clearing. Refer to EC-23, "Fuel Pump Learning Value Clearing".

5. Perform EGR Volume Control Valve Closed Position Learning Value Clear. Refer to EC-24, "EGR Volume Control Valve Closed Position Learning Value Clear".
6. Perform EGR Volume Control Valve Closed Position Learning. Refer to EC-24, "EGR Volume Control Valve Closed Position Learning".

>> **INSPECTION END**

DTC P0628, P0629 FUEL PUMP

Description

INFOID:0000000003759648

To control the amount of the fuel inhalation of the fuel pump, a plunger is built into the fuel pump. When the amount of the fuel inhalation of fuel increases, the fuel pump raises the fuel exhalation pressure. As a result, the fuel injection pressure is raised. When the load of the engine increases, the ECM sends a signal to the fuel pump to raise the injection pressure.

CONSULT-III Reference Value in Data Monitor Mode

INFOID:0000000003759649

Specification data are reference values.

MONITOR ITEM	CONDITION		SPECIFICATION
PUMP CURRENT	• Engine: After warming up • Air conditioner switch: OFF • Shift lever: Neutral • No load	Idle	1,600 - 2,000 mA
		2,000 rpm	1,500 - 1,900 mA

On Board Diagnosis Logic

INFOID:0000000003759650

DTC No.	Trouble diagnosis name	DTC detecting condition	Possible cause
P0628 0628	Fuel pump control circuit low input	ECM detects a control circuit for the fuel pump is open or short to ground.	• Harness or connectors (The fuel pump circuit is open or shorted.) • Fuel pump
P0629 0629	Fuel pump control circuit high input	ECM detects a control circuit for the fuel pump is short to power.	

DTC Confirmation Procedure

INFOID:0000000003759651

NOTE:
If DTC Confirmation Procedure has been previously conducted, always turn ignition switch OFF and wait at least 10 seconds before conducting the next test.

1. Start engine and warm it up to normal operating temperature.
2. Let engine idle for at least 5 seconds.
3. Check 1st trip DTC.
4. If 1st trip DTC is detected, go to EC-207, "Diagnosis Procedure".

Wiring Diagram

INFOID:0000000003759652

EC-F/PUMP-01

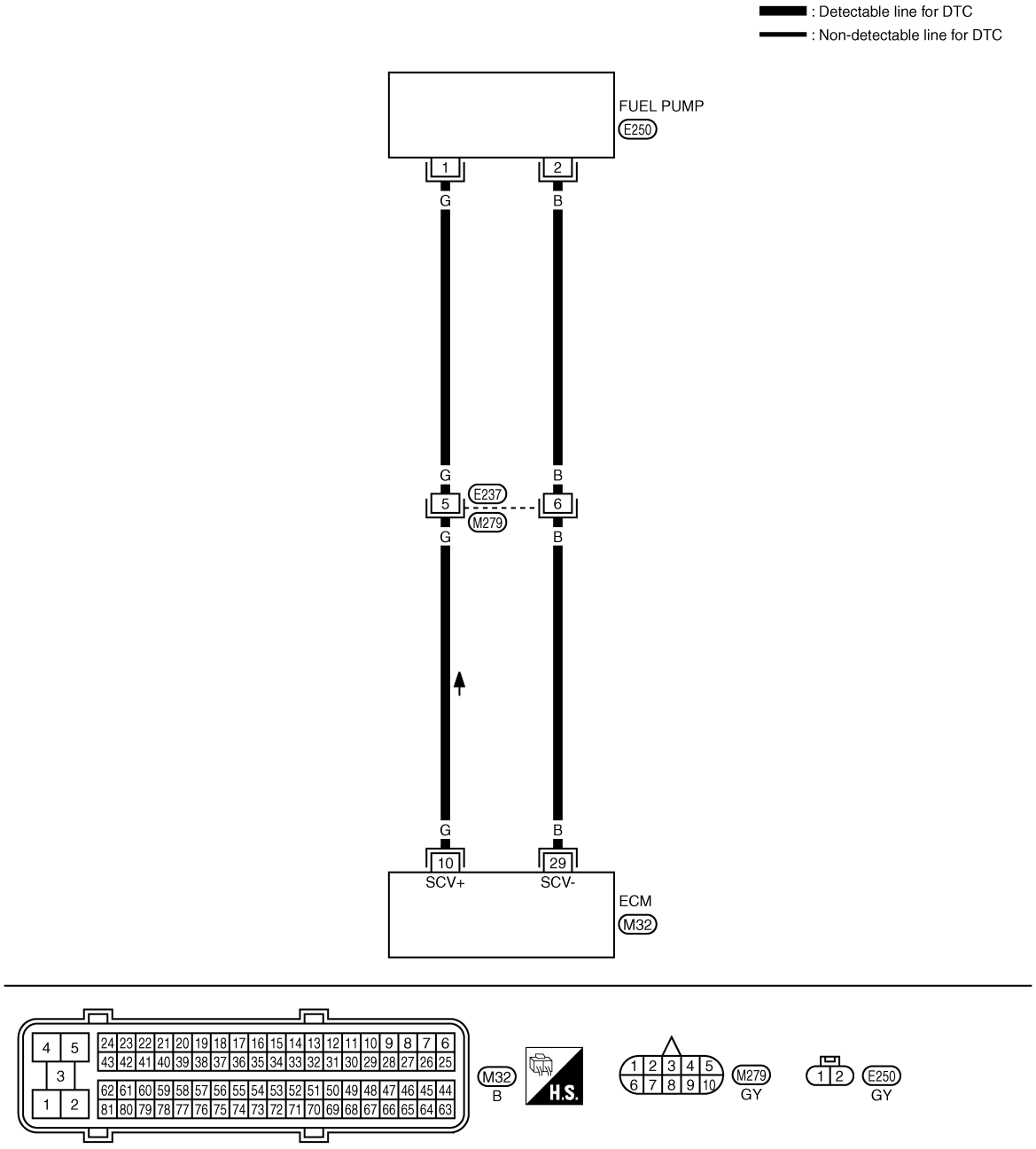

GEC621A

Specification data are reference values and are measured between each terminal and ground.
Pulse signal is measured by CONSULT-III.

TERMINAL NO. (Wire color) +	TERMINAL NO. (Wire color) –	Description Signal name	Condition	Value (Approx.)
10 (G)	114 (B)	Fuel pump	**[Engine is running]** • **Warm-up condition** • Idle speed	Approximately 5.8 V ★ 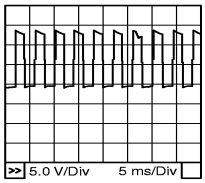 MBIB0885E
			[Engine is running] • **Warm-up condition** • Engine speed: 2,000 rpm	Approximately 5.5 V ★ 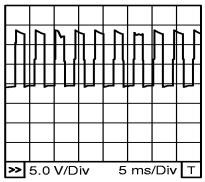 MBIB0886E
29 (B)	114 (B)	Fuel pump	**[Engine is running]** • **Warm-up condition** • Idle speed	Approximately 0.3 V ★ 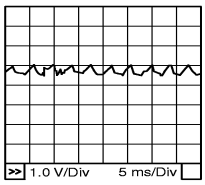 MBIB0887E
			[Engine is running] • **Warm-up condition** • Engine speed: 2,000 rpm	Approximately 0.3 V ★ 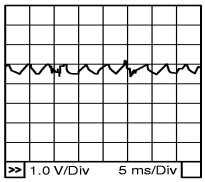 MBIB0888E

Diagnosis Procedure

INFOID:0000000003759653

1. CHECK ECM OUTPUT SIGNAL CIRCUIT FOR OPEN AND SHORT

1. Turn ignition switch OFF.
2. Disconnect fuel pump (2) harness connector.
- Fuel pump temperature sensor (1)
3. Disconnect ECM harness connector.
4. Check harness continuity between ECM terminal 10 and fuel pump terminal 1.
   Refer to Wiring Diagram.

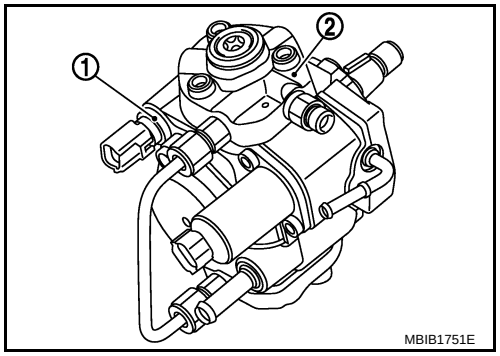

Continuity should exist.

5. Also check harness for short to ground and short to power.

OK or NG

OK >> GO TO 3.
NG >> GO TO 2.

2. DETECT MALFUNCTIONING PART

Check the following.
- Harness connectors E237, M279

- Harness for open or short between fuel pump and ECM

>> Repair open circuit or short to ground or short to power in harness or connectors.

3. CHECK FUEL PUMP GROUND CIRCUIT FOR OPEN AND SHORT

1. Check harness continuity between ECM terminal 29 and fuel pump terminal 2.
   Refer to Wiring Diagram.

   Continuity should exist.

2. Also check harness for short to ground and short to power.

OK or NG

OK >> GO TO 5.
NG >> GO TO 4.

4. DETECT MALFUNCTIONING PART

Check the following.
- Harness connectors E237, M279
- Harness for open or short between fuel pump and ECM

>> Repair open circuit or short to ground or short to power in harness or connectors.

5. CHECK FUEL PUMP

Refer to EC-208, "Component Inspection".

OK or NG

OK >> GO TO 7.
NG >> GO TO 6.

6. REPLACE FUEL PUMP

1. Replace fuel pump.
2. Perform Fuel Pump Learning Value Clearing. Refer to EC-23, "Fuel Pump Learning Value Clearing".

>> **INSPECTION END**

7. CHECK INTERMITTENT INCIDENT

Refer to EC-70.

>> **INSPECTION END**

Component Inspection

INFOID:0000000003759654

FUEL PUMP

1. Disconnect fuel pump harness connector.
2. Check resistance between fuel pump terminals 1 and 2.

   Resistance: 1.5 - 3.0 Ω [at 10 - 60°C (50 - 140°F)]

3. If NG, replace fuel pump.

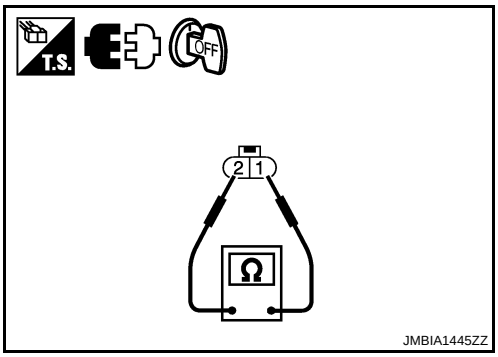

Removal and Installation

INFOID:0000000003759655

FUEL PUMP

Refer to EC-24.

DTC P0642, P0643 SENSOR POWER SUPPLY

On Board Diagnosis Logic

INFOID:0000000003759660

DTC No.	Trouble diagnosis name	DTC detecting condition	Possible cause
P0642 0642	Sensor power supply circuit low	ECM detects a voltage of power source for sensor is excessively low.	• Harness or connectors (The APP sensor 1 power supply circuit is shorted.) (Crankshaft position sensor circuit is shorted.) (EGR volume control valve control position sensor circuit is shorted.) • Accelerator pedal position sensor (Accelerator pedal position sensor 1) • Crankshaft position sensor • EGR volume control valve control position sensor
P0643 0643	Sensor power supply circuit high	ECM detects a voltage of power source for Sensor is excessively high.	

DTC Confirmation Procedure

INFOID:0000000003759661

NOTE:
If DTC Confirmation Procedure has been previously conducted, always turn ignition switch OFF and wait at least 10 seconds before conducting the next test.

1. Turn ignition switch ON.
2. Wait at least 5 seconds.
3. Check 1st trip DTC.
4. If 1st trip DTC is detected, go to EC-212, "Diagnosis Procedure".

Wiring Diagram

INFOID:0000000003759662

EC-APP1PW-01

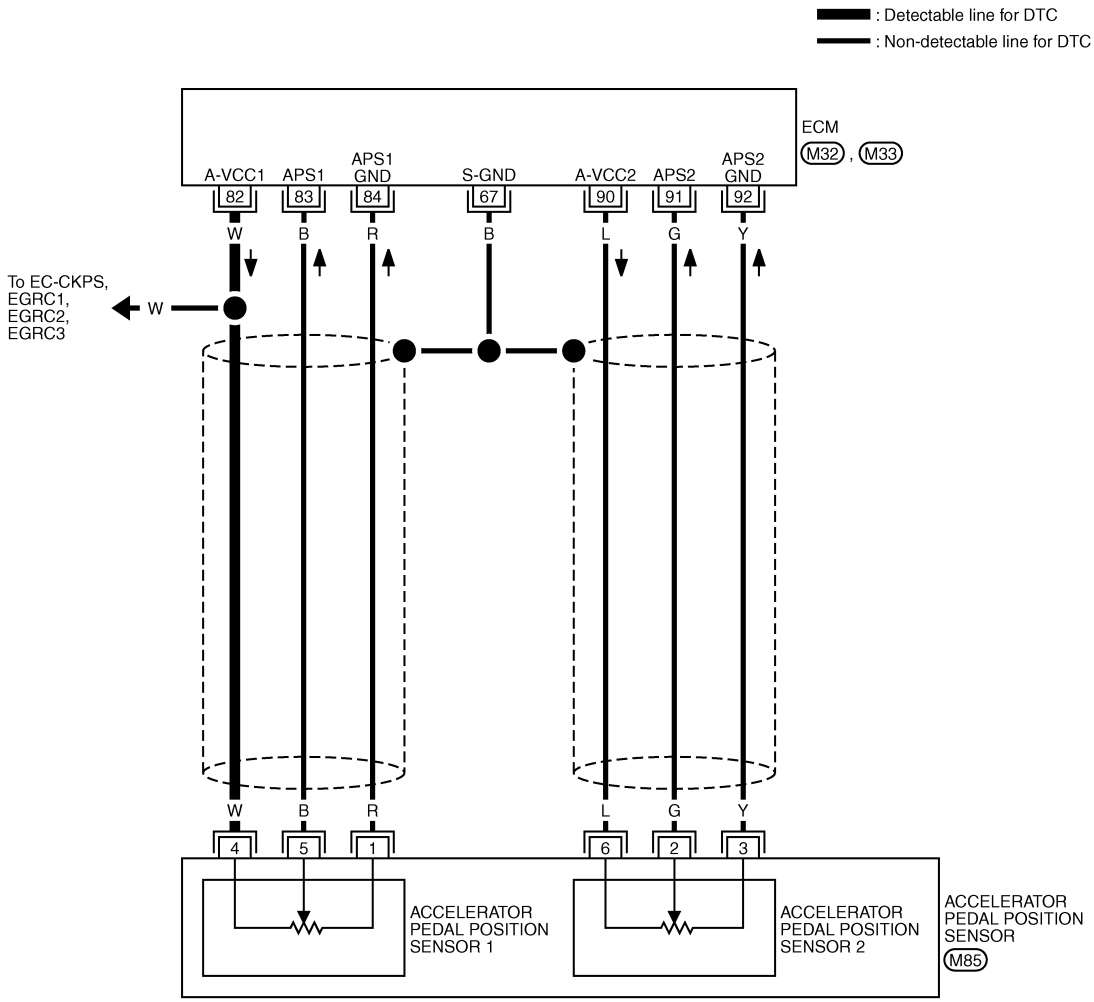

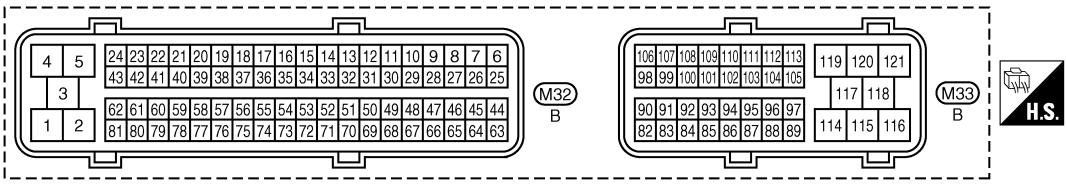

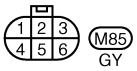

GEC622A

Specification data are reference values and are measured between each terminal and ground.

TERMINAL NO. (Wire color)		Description	Condition	Value (Approx.)
+	–	Signal name		
67 (B)	—	Sensor ground (Sensor shield circuit)	—	—
82 (W)	84 (R)	Sensor power supply (Accelerator pedal position sensor 1 / Crankshaft position sensor / EGR volume control valve control position sensor)	**[Ignition switch ON]**	Approximately 5 V
83 (B)	84 (R)	Accelerator pedal position sensor 1	**[Ignition switch ON]** • Engine: Stopped • Accelerator pedal: Fully released	0.5 - 1.0 V
			[Ignition switch ON] • Engine: Stopped • Accelerator pedal: Fully depressed	3.9 - 4.7 V
84 (R)	—	Accelerator pedal position sensor 1 ground	—	—
90 (L)	92 (Y)	Accelerator pedal position sensor 2 power supply	**[Ignition switch ON]**	Approximately 5 V
91 (G)	92 (Y)	Accelerator pedal position sensor 2	**[Ignition switch ON]** • Engine: Stopped • Accelerator pedal: Fully released	0.15 - 0.6 V
			[Ignition switch ON] • Engine: Stopped • Accelerator pedal: Fully depressed	1.85 - 2.4 V
92 (Y)	—	Accelerator pedal position sensor 2 ground	—	—

Diagnosis Procedure

INFOID:0000000003759663

1. CHECK GROUND CONNECTIONS

1. Turn ignition switch OFF.
2. Loosen and retighten ground screws on the body.
   Refer to EC-81, "Ground Inspection".

- Body ground M97 (1)
- Body ground M99 (2)
- ECM (3)

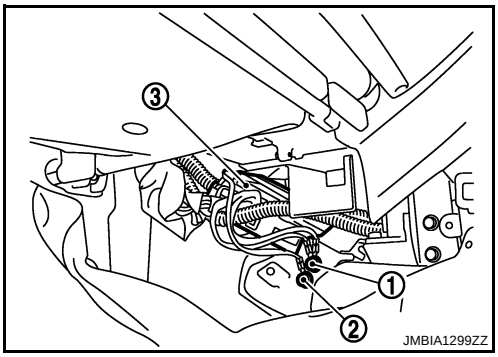

OK or NG

OK >> GO TO 2.
NG >> Repair or replace ground connections.

2. CHECK APP SENSOR 1 POWER SUPPLY CIRCUIT

1. Disconnect accelerator pedal position (APP) sensor (1) harness connector.
2. Turn ignition switch ON.

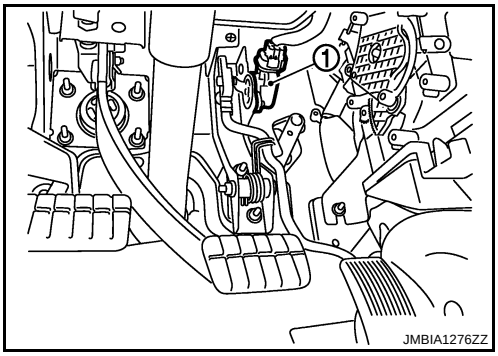

3. Check voltage between APP sensor terminal 4 and ground with CONSULT-III or tester.

Voltage: Approximately 5 V

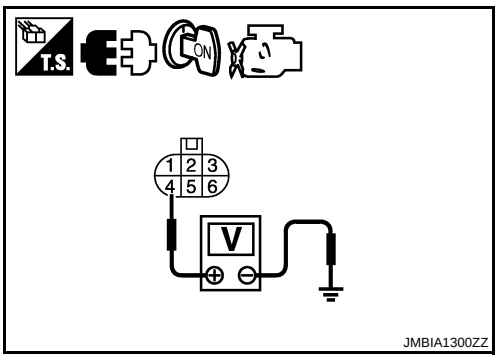

OK or NG

OK >> GO TO 5.
NG >> GO TO 3.

3. CHECK SENSOR POWER SUPPLY CIRCUITS

Check harness for short to power and short to ground, between the following terminals.

ECM terminal	Sensor terminal	Reference Wiring Diagram
82	APP sensor terminal 4	EC-211
	Crankshaft position sensor terminal 3	EC-153
	EGR volume control valve terminal 3	EC-186

OK or NG

OK >> GO TO 4.
NG >> Repair short to ground or short to power in harness or connectors.

4. CHECK CRANKSHAFT POSITION SENSOR

Refer to EC-156, "Component Inspection".

OK or NG

OK >> GO TO 5.
NG >> Replace crankshaft position sensor.

5. CHECK APP SENSOR

Refer to EC-123, "Component Inspection".

OK or NG

OK >> GO TO 6.
NG >> Replace accelerator pedal assembly.

6. CHECK INTERMITTENT INCIDENT

Refer to EC-70.

OK or NG

OK >> GO TO 7.
NG >> Repair or replace.

7. REPLACE EGR VOLUME CONTROL VALVE

1. Replace the EGR volume control valve.
2. Perform EC-24, "EGR Volume Control Valve Closed Position Learning Value Clear".
3. Perform EC-24, "EGR Volume Control Valve Closed Position Learning".

>> **INSPECTION END**

DTC P0652, P0653 SENSOR POWER SUPPLY

On Board Diagnosis Logic

INFOID:0000000003759664

DTC No.	Trouble diagnosis name	DTC detecting condition	Possible cause
P0652 0652	Sensor power supply circuit low	ECM detects a voltage of power source for sensor is excessively low.	• Harness or connectors (APP sensor 2 power supply circuit is shorted.) (Camshaft position sensor circuit is shorted.) (Fuel rail pressure sensor circuit is shorted.) • Accelerator pedal position sensor (Accelerator pedal position sensor 2) • Camshaft position sensor • Fuel rail pressure sensor
P0653 0653	Sensor power supply circuit high	ECM detects a voltage of power source for Sensor is excessively high.	

DTC Confirmation Procedure

INFOID:0000000003759665

NOTE:
If DTC Confirmation Procedure has been previously conducted, always turn ignition switch OFF and wait at least 10 seconds before conducting the next test.

1. Turn ignition switch ON.
2. Wait at least 5 seconds.
3. Check 1st trip DTC.
4. If 1st trip DTC is detected, go to EC-216, "Diagnosis Procedure".

Wiring Diagram

INFOID:0000000003759666

EC-APP2PW-01

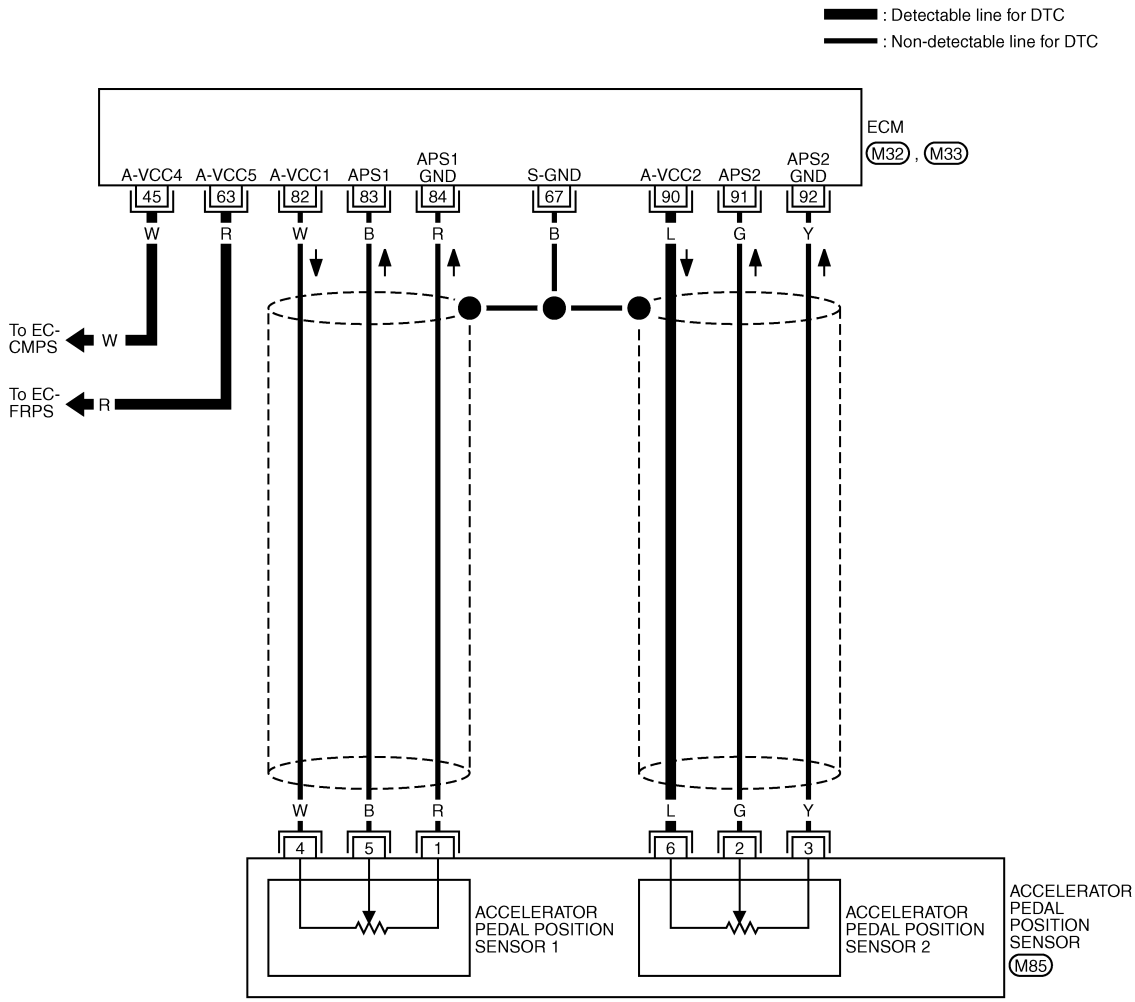

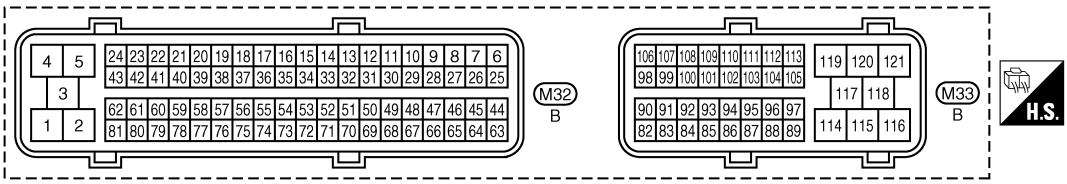

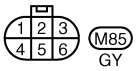

GEC623A

Specification data are reference values and are measured between each terminal and ground.

TERMINAL NO. (Wire color)		Description	Condition	Value (Approx.)
+	–	Signal name		
45 (W)	66 (B)	Camshaft position sensor power supply	**[Ignition switch ON]**	Approximately 5 V
63 (R)	68 (B)	Fuel rail pressure sensor power supply	**[Ignition switch ON]**	Approximately 5 V
67 (B)	—	Sensor ground (Sensor shield circuit)	—	—
82 (W)	84 (R)	Sensor power supply (Accelerator pedal position sensor 1 / Crankshaft position sensor / EGR volume control valve control position sensor)	**[Ignition switch ON]**	Approximately 5 V
83 (B)	84 (R)	Accelerator pedal position sensor 1	**[Ignition switch ON]** • Engine: Stopped • Accelerator pedal: Fully released	0.5 - 1.0 V
			[Ignition switch ON] • Engine: Stopped • Accelerator pedal: Fully depressed	3.7 - 4.7 V
84 (R)	—	Accelerator pedal position sensor 1 ground	—	—
90 (L)	92 (Y)	Accelerator pedal position sensor 2 power supply	**[Ignition switch ON]**	Approximately 5 V
91 (G)	92 (Y)	Accelerator pedal position sensor 2	**[Ignition switch ON]** • Engine: Stopped • Accelerator pedal: Fully released	0.15 - 0.6 V
			[Ignition switch ON] • Engine: Stopped • Accelerator pedal: Fully depressed	1.85 - 2.4
92 (Y)	—	Accelerator pedal position sensor 2 ground	—	—

Diagnosis Procedure

INFOID:0000000003759667

1. CHECK GROUND CONNECTIONS

1. Turn ignition switch OFF.
2. Loosen and retighten ground screws on the body.
   Refer to EC-81, "Ground Inspection".

- Body ground M97 (1)
- Body ground M99 (2)
- ECM (3)

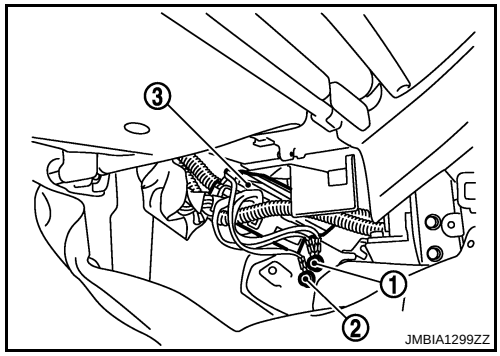

OK or NG

OK >> GO TO 2.
NG >> Repair or replace ground connections.

2. CHECK APP SENSOR 2 POWER SUPPLY CIRCUIT

1. Disconnect accelerator pedal position (APP) sensor (1) harness connector.
2. Turn ignition switch ON.

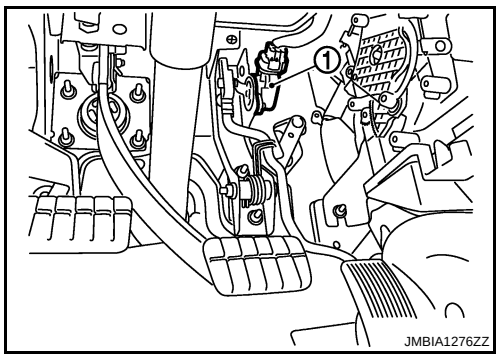

3. Check voltage between APP sensor terminal 6 and ground with CONSULT-III or tester.

Voltage: Approximately 5 V

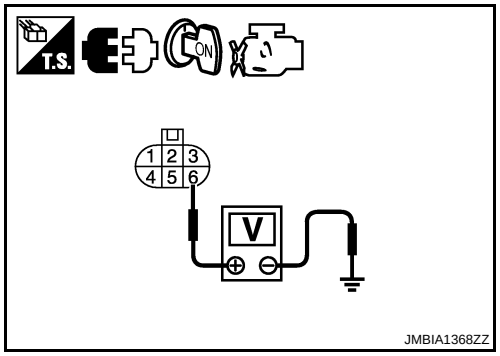

OK or NG

OK >> GO TO 5.
NG >> GO TO 3.

3. CHECK SENSOR POWER SUPPLY CIRCUITS

Check the following.
Harness for short to power and short to ground, between the following terminals.

ECM terminal	Sensor terminal	Reference Wiring Diagram
90	APP sensor terminal 6	EC-215
45	Camshaft position sensor terminal 3	EC-164
63	Fuel rail pressure sensor terminal 1	EC-129

OK or NG

OK >> GO TO 4.
NG >> Repair short to ground or short to power in harness or connectors.

4. CHECK COMPONENTS

Check the following.
- Camshaft position sensor (Refer to EC-166, "Component Inspection".)
- Fuel rail pressure sensor (Refer to EC-131, "Component Inspection".)

OK or NG

OK >> GO TO 5.
NG >> Replace malfunctioning component.

5. CHECK APP SENSOR

Refer to EC-150, "Component Inspection".

OK or NG

OK >> GO TO 6.
NG >> Replace accelerator pedal assembly.

6. CHECK INTERMITTENT INCIDENT

Refer to EC-70.

>> **INSPECTION END**

DTC P0668, P0669 ECM

Description

INFOID:0000000003759668

The ECM consists of a microcomputer and connectors for signal input and output and for power supply. The ECM controls the engine.

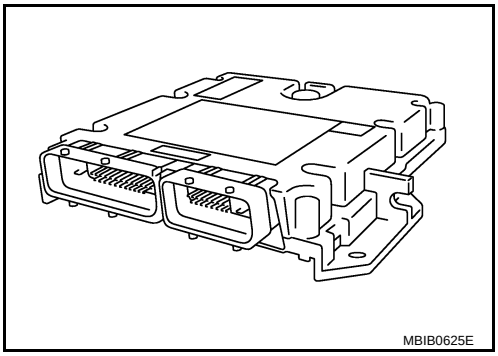

On Board Diagnosis Logic

INFOID:0000000003759669

DTC No.	Trouble diagnosis name	DTC detecting condition	Possible cause
P0668 0668	ECM internal temperature sensor circuit low input	An excessively low voltage from the sensor is sent to ECM.	• ECM
P0669 0669	ECM internal temperature sensor circuit high input	An excessively high voltage from the sensor is sent to ECM.	

DTC Confirmation Procedure

INFOID:0000000003759670

NOTE:
If DTC Confirmation Procedure has been previously conducted, always turn ignition switch OFF and wait at least 10 seconds before conducting the next test.

1. Turn ignition switch ON.
2. Wait at least 5 seconds.
3. Check 1st trip DTC.
4. If 1st trip DTC is detected, go to EC-218, "Diagnosis Procedure".

Diagnosis Procedure

INFOID:0000000003759671

1. INSPECTION START

With CONSULT-III
1. Turn ignition switch ON.
2. Select “SELF DIAG RESULTS” mode with CONSULT-III.
3. Touch “ERASE”.
4. Perform EC-218, "DTC Confirmation Procedure", again.
5. Is 1st trip DTC P0668 or P0669 displayed again?

With GST
1. Turn ignition switch ON.
2. Select Service $04 with GST.
3. Perform EC-218, "DTC Confirmation Procedure", again.
4. Is 1st trip DTC P0668 or P0669 displayed again?

Yes or No

Yes >> GO TO 2.
No >> **INSPECTION END**

2. REPLACE ECM

1. Replace ECM.
2. Perform initialization of NATS system and registration of all NATS ignition key IDs. Refer to EL-96, "ECM Re-communicating Function".
3. Perform Injector Adjustment Value Registration. Refer to EC-22, "Injector Adjustment Value Registration".

4. Perform Fuel Pump Learning Value Clearing. Refer to EC-23, "Fuel Pump Learning Value Clearing".
5. Perform EGR Volume Control Valve Closed Position Learning Value Clear. Refer to EC-24, "EGR Volume Control Valve Closed Position Learning Value Clear".
6. Perform EGR Volume Control Valve Closed Position Learning. Refer to EC-24, "EGR Volume Control Valve Closed Position Learning".

>> **INSPECTION END**

DTC P0686 ECM RELAY

On Board Diagnosis Logic

INFOID:0000000003759672

This self-diagnosis has the one trip detection logic.
The MI will not light up for this self-diagnosis.

DTC No.	Trouble diagnosis name	DTC detecting condition	Possible cause
P0686 0686	ECM relay circuit	ECM detects ECM relay is stuck closed even if ignition switch OFF.	• Harness or connectors (The ECM relay circuit is shorted.) • ECM relay

DTC Confirmation Procedure

INFOID:0000000003759673

NOTE:
If DTC Confirmation Procedure has been previously conducted, always turn ignition switch OFF and wait at least 10 seconds before conducting the next test.

1. Turn ignition switch ON and then turn OFF.
2. Wait at least 30 seconds.
3. Turn ignition switch ON.
4. Check DTC.
5. If DTC is detected, go to EC-224, "Diagnosis Procedure".

Wiring Diagram

INFOID:0000000003759674

LHD MODELS

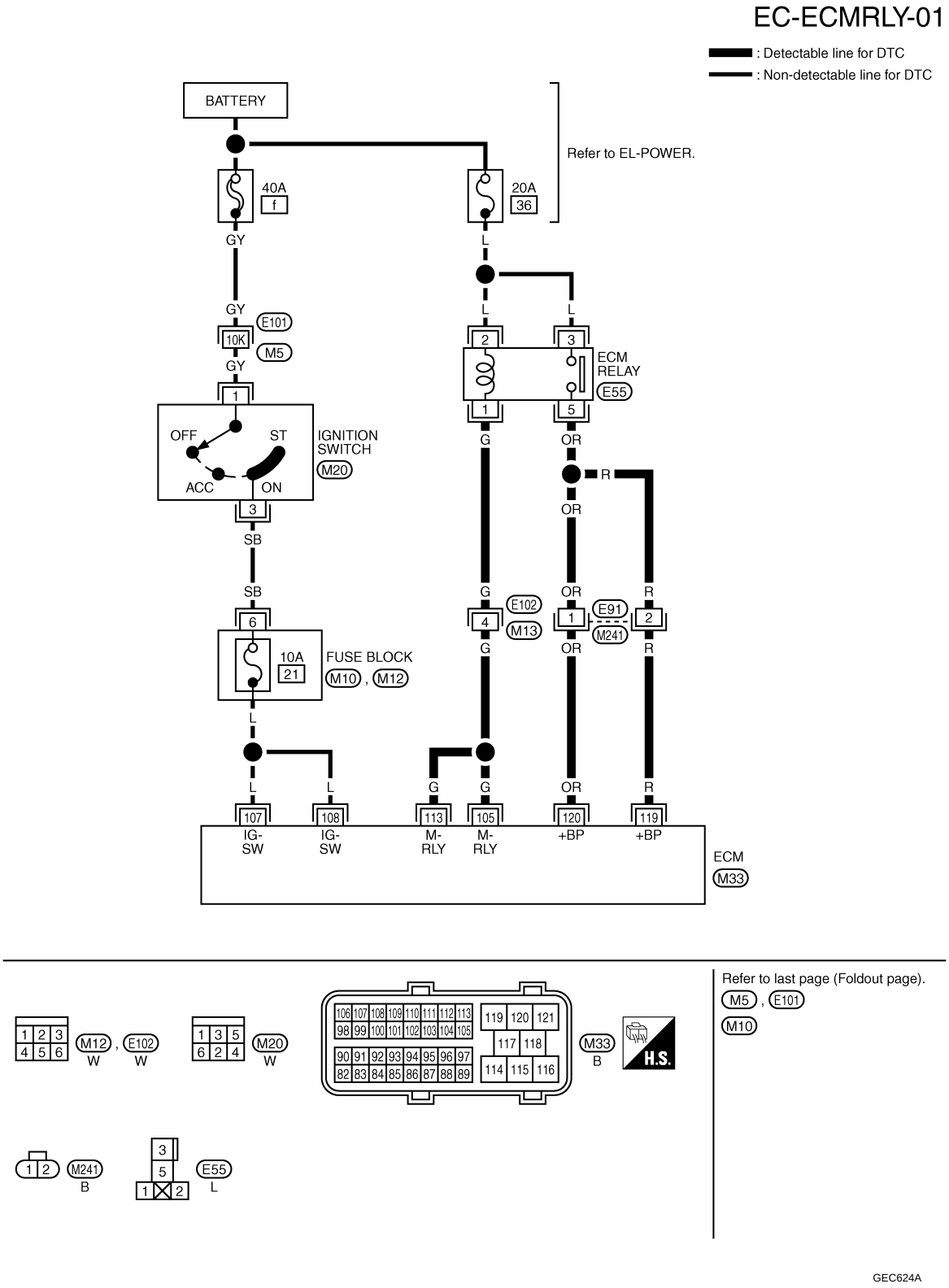

Specification data are reference values and are measured between each terminal and ground.

TERMINAL NO. (Wire color)		Description	Condition	Value (Approx.)
+	–	Signal name		
105 (G)	114 (B)	ECM relay (self shut-off)	**[Ignition switch ON]** **[Ignition switch OFF]** • For a few seconds after turning ignition switch OFF	0 - 1.0 V
113 (G)			**[Ignition switch OFF]** • More than a few seconds after turning ignition switch OFF	BATTERY VOLTAGE (11 - 14 V)
107 (L) 108 (L)	114 (B)	Ignition switch	**[Ignition switch ON]**	BATTERY VOLTAGE (11 - 14 V)
119 (R) 120 (OR)	114 (B)	Power supply for ECM	**[Ignition switch ON]**	BATTERY VOLTAGE (11 - 14 V)

RHD MODELS

EC-ECMRLY-02

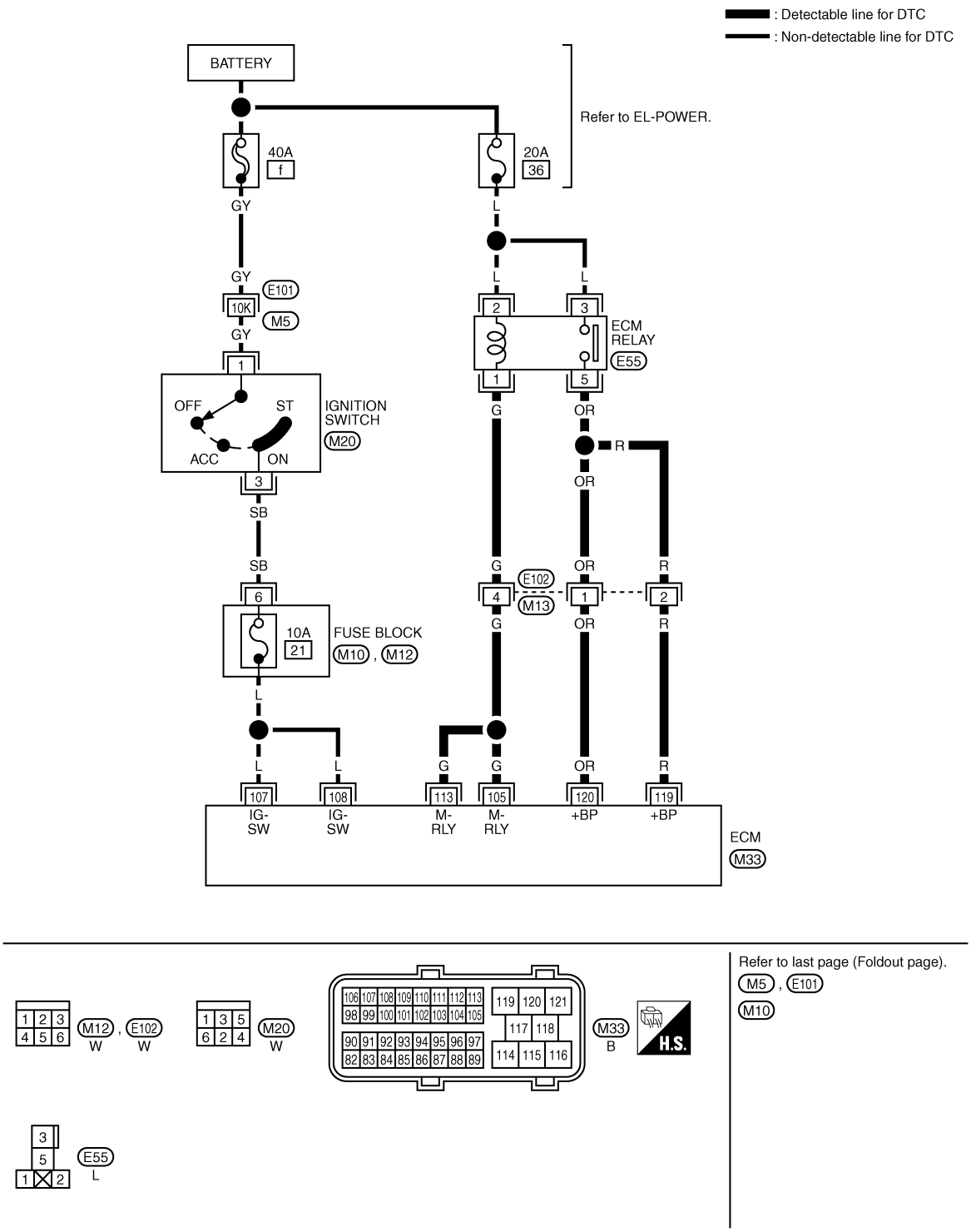

Specification data are reference values and are measured between each terminal and ground.

TERMINAL NO. (Wire color)		Description	Condition	Value (Approx.)
+	–	Signal name		
105 (G)	114 (B)	ECM relay (self shut-off)	**[Ignition switch ON]** **[Ignition switch OFF]** • For a few seconds after turning ignition switch OFF	0 - 1.0 V
113 (G)			**[Ignition switch OFF]** • More than a few seconds after turning ignition switch OFF	BATTERY VOLTAGE (11 - 14 V)
107 (L) 108 (L)	114 (B)	Ignition switch	**[Ignition switch ON]**	BATTERY VOLTAGE (11 - 14 V)
119 (R) 120 (OR)	114 (B)	Power supply for ECM	**[Ignition switch ON]**	BATTERY VOLTAGE (11 - 14 V)

Diagnosis Procedure

INFOID:0000000003759675

1. CHECK ECM RELAY INPUT SIGNAL CIRCUIT

1. Turn ignition switch ON and then OFF.
2. Check voltage between ECM harness connector terminals as follows.

ECM				Voltage
+		–		
Connector	Terminal	Connector	Terminal	
M33	119	M32	1	After turning ignition switch OFF, battery voltage will exist for a few seconds, then drop approximately 0 V.
			2	
			3	
		M33	114	
	120	M32	1	
			2	
			3	
		M33	114	

OK or NG

OK >> GO TO 10.
NG >> GO TO 2.

2. CHECK ECM RELAY SIGNAL CIRCUIT FOR SHORT TO GROUND

Check the voltage between ECM relay harness connector and ground.

ECM relay		Ground	Voltage
Connector	Terminal		
E55	2	Ground	Battery voltage
	3		

OK or NG

OK >> GO TO 4.
NG >> GO TO 3.

3. DETECT MALFUNCTIONING PART

Check the following.
- 20A fuse (No.36)
- Harness for open or short between Battery and ECM relay

>> Repair open circuit or short to ground or short to power in harness or connectors.

4. CHECK ECM RELAY OUTPUT SIGNAL CIRCUIT

1. Turn ignition switch OFF, and wait at least 10 seconds.
2. Check voltage between ECM harness connector terminals as follows.

ECM				Voltage
+		–		
Connector	Terminal	Connector	Terminal	
M33	105	M32	1	Battery voltage
			2	
			3	
		M33	114	
	113	M32	1	
			2	
			3	
		M33	114	

OK or NG

OK >> GO TO 7.
NG >> GO TO 5.

5. CHECK ECM RELAY OUTPUT SIGNAL CIRCUIT FOR SHORT TO GROUND

1. Disconnect ECM harness connector.
2. Disconnect ECM relay harness connector.
3. Check the continuity between ECM harness connector and ECM relay harness connector.

ECM		ECM relay		Continuity
Connector	Terminal	Connector	Terminal	
M33	105	E55	1	Existed
	113			

4. Also check harness for short to ground and short to power.

OK or NG

OK >> GO TO 7.
NG >> GO TO 6.

6. DETECT MALFUNCTIONING PART

Check the following.
- Harness connectors E102, M13
- Harness for open or short between ECM and ECM relay

>> Repair open circuit or short to ground or short to power in harness or connectors.

7. CHECK ECM RELAY INPUT SIGNAL CIRCUIT FOR OPEN AND SHORT

1. Check the continuity between ECM harness connector and ECM relay harness connector.

ECM		ECM relay		Continuity
Connector	Terminal	Connector	Terminal	
M33	119	E55	5	Existed
	120			

2. Also check harness for short to ground and short to power.

OK or NG

OK >> GO TO 9.
NG >> GO TO 8.

8. DETECT MALFUNCTIONING PART

Check the following.
- Harness connectors E91, M241 (LHD models)
- Harness connectors E102, M13 (RHD models)
- Harness for open or short between ECM and ECM relay

>> Repair open circuit or short to ground or short to power in harness or connectors.

9. CHECK ECM RELAY

Refer to EC-81

OK >> GO TO 10.
NG >> Replace ECM relay.

10. CHECK INTERMITTENT INCIDENT

Refer to EC-70.

OK or NG

OK >> Replace ECM relay.
NG >> Repair open circuit or short to ground or short to power in harness or connectors.

Component Inspection

INFOID:0000000003855862

ECM RELAY

1. Disconnect ECM relay.
2. Check continuity between ECM relay terminals under the following conditions.

Terminals	Conditions	Continuity
3 and 5	12 V direct current supply between terminals 1 and 2	Existed
	No current supply	Not existed

If NG, replace cooling fan relay.

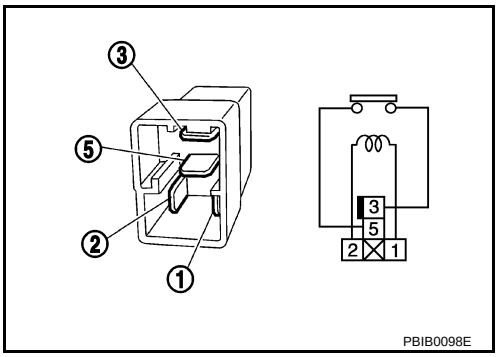

DTC P1268 - P1271 FUEL INJECTOR

Component Description

INFOID:0000000003759684

The fuel injector is a small, precise solenoid valve. When the ECM supplies a ground to the fuel injector circuit, the coil in the fuel injector is energized. The energized coil pulls the needle valve back and allows fuel to flow through the fuel injector into the cylinder. The amount of fuel injected depends upon the injection pulse duration. Pulse duration is the length of time the fuel injector remains open. The ECM controls the injection pulse duration based on engine fuel needs.

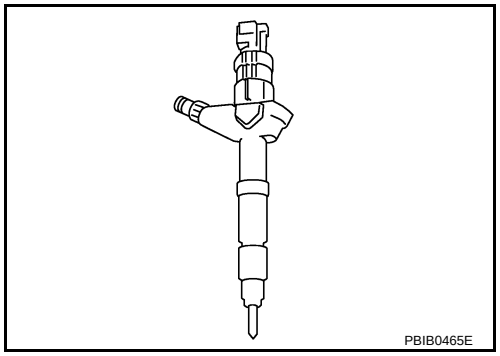

CONSULT-III Reference Value in Data Monitor Mode

INFOID:0000000003759685

Specification data are reference values.

MONITOR ITEM	CONDITION		SPECIFICATION
MAIN INJ WID	• Engine: After warming up • Shift lever: Neutral • Idle speed	No load	0.50 - 0.70 msec
		Blower fan switch: ON	0.50 - 0.80 msec

On Board Diagnosis Logic

INFOID:0000000003759686

These self-diagnoses have the one trip detection logic.
The MI will not light up for these self-diagnoses.

DTC No.	Trouble diagnosis name	DTC detecting condition	Possible cause
P1268 1268	No. 1 cylinder fuel injector	The valve built into No. 1 cylinder fuel injector is not closed properly (stuck open) when the injector is not energized.	• Harness or connectors (The fuel pump circuit is open or shorted.) • Fuel injector • Injector adjustment value
P1269 1269	No. 2 cylinder fuel injector	The valve built into No. 2 cylinder fuel injector is not closed properly (stuck open) when the injector is not energized.	
P1270 1270	No. 3 cylinder fuel injector	The valve built into No. 3 cylinder fuel injector is not closed properly (stuck open) when the injector is not energized.	
P1271 1271	No. 4 cylinder fuel injector	The valve built into No. 4 cylinder fuel injector is not closed properly (stuck open) when the injector is not energized.	

DTC Confirmation Procedure

INFOID:0000000003759687

CAUTION:
Always drive vehicle in safe manner according to traffic conditions and obey all traffic laws when driving.
NOTE:
If DTC Confirmation Procedure has been previously conducted, always turn ignition switch OFF and wait at least 10 seconds before conducting the next test.

WITH CONSULT-III

1. Start engine and let it idle for about 15 minutes.
2. Check DTC.
3. If DTC is detected, go to EC-231, "Diagnosis Procedure".
   If DTC is not detected, go to next step.
4. Drive vehicle and maintain the following conditions for at least 60 seconds.

CKPS·RPM	700 - 2,000 rpm (A constant rotation is maintained)
COOLAN TEMP/S	Less than 75°C (167°F)
Shift lever	Suitable position
Accelerator pedal	Hold the accelerator pedal as steady as possible.

5. Check DTC.
6. If DTC is detected, go to EC-231, "Diagnosis Procedure".

WITH GST

Follow the procedure “WITH CONSULT-III” above.

Wiring Diagram

INFOID:0000000003759688

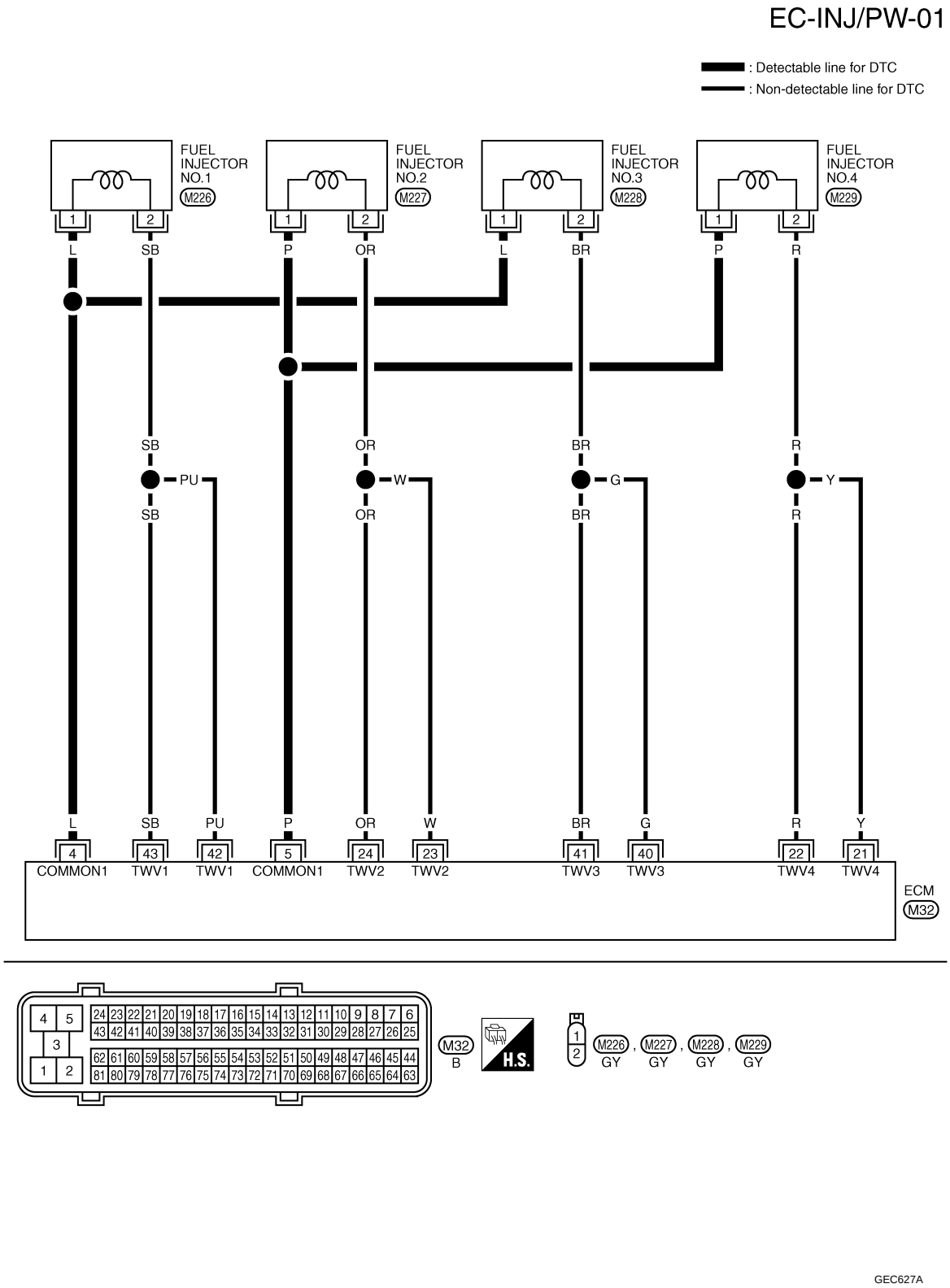

Specification data are reference values and are measured between each terminal and ground.
Pulse signal is measured by CONSULT-III.

TERMINAL NO. (Wire color)		Description	Condition	Value (Approx.)
+	–	Signal name		
4 (L)	114 (B)	Fuel injector power supply (For cylinder No. 1 and 3)	**[Engine is running]** • **Warm-up condition** • Idle speed **NOTE:** The pulse cycle changes depending on rpm at idle	Approximately 7.5 V ★ 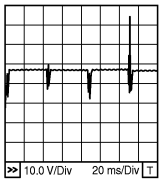 MBIB1295E
5 (P)		Fuel injector power supply (For cylinder No. 2 and 4)	**[Engine is running]** • **Warm-up condition** • Engine speed: 2,000 rpm	Approximately 8.0 V ★ 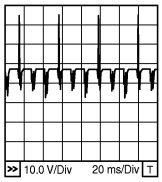 MBIB1296E
21 (Y)	114 (B)	Fuel injector No. 4	**[Engine is running]** • **Warm-up condition** • Idle speed **NOTE:** The pulse cycle changes depending on rpm at idle	Approximately 7.5 V ★ 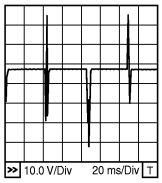 MBIB1297E
22 (R)		Fuel injector No. 4		
23 (W)		Fuel injector No. 2	**[Engine is running]** • **Warm-up condition** • Engine speed: 2,000 rpm	Approximately 8.0 V ★ 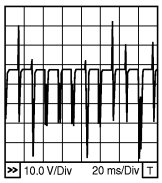 MBIB1298E
24 (OR)		Fuel injector No. 2		
40 (G)	114 (B)	Fuel injector No. 3	**[Engine is running]** • **Warm-up condition** • Idle speed **NOTE:** The pulse cycle changes depending on rpm at idle	Approximately 7.5 V ★ 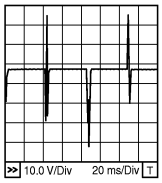 MBIB1297E
41 (BR)		Fuel injector No. 3		
42 (PU)		Fuel injector No. 1	**[Engine is running]** • **Warm-up condition** • Engine speed: 2,000 rpm	Approximately 8.0 V ★ 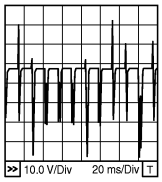 MBIB1298E
43 (SB)		Fuel injector No. 1		

★: Average voltage for pulse signal (Actual pulse signal can be confirmed by oscilloscope.)

Diagnosis Procedure

INFOID:0000000003759690

1. CHECK INJECTOR ADJUSTMENT VALUE

1. Turn ignition switch ON.
2. Select “ENTER INJCTR CALIB DATA” in “WORK SUPPORT” mode with CONSULT-III.
3. Check injector adjustment values displayed on CONSULT-III screen.

The value displayed on CONSULT-III screen should be same as injector adjustment value printed on each fuel injector.

OK or NG

OK >> GO TO 2.
NG >> Perform Injector Adjustment Value Registration. Refer to EC-22, "Injector Adjustment Value Registration".

2. CHECK FUEL INJECTOR POWER SUPPLY CIRCUIT FOR OPEN AND SHORT

1. Turn ignition switch OFF.
2. Disconnect fuel injector (1) harness connector.

⇦ : Vehicle front

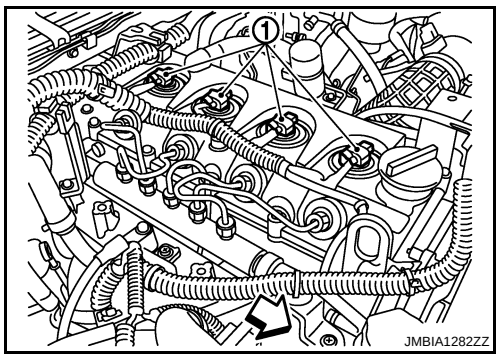

3. Disconnect ECM harness connector.
4. Check harness continuity between the following terminals corresponding to the malfunctioning cylinder. Refer to Wiring Diagram.

DTC	Terminal		Cylinder
	ECM	Fuel injector	
P1268	4	1	No.1
P1269	5	1	No.2
P1270	4	1	No.3
P1271	5	1	No.4

Continuity should exist.

5. Also check harness for short to ground and short to power.

OK or NG

OK >> GO TO 3.
NG >> Repair open circuit or short to ground or short to power in harness or connectors.

3. CHECK ECM OUTPUT SIGNAL CIRCUIT FOR OPEN AND SHORT

1. Check harness continuity between the following terminals corresponding to the malfunctioning cylinder. Refer to Wiring Diagram.

DTC	Terminal		Cylinder
	ECM	Fuel injector	
P1268	42, 43	2	No.1
P1269	23, 24	2	No.2
P1270	40, 41	2	No.3
P1271	21, 22	2	No.4

Continuity should exist.

2. Also check harness for short to ground and short to power.

OK or NG

OK >> GO TO 4.
NG >> Repair open circuit or short to ground or short to power in harness or connectors.

4. CHECK FUEL INJECTOR-I

Refer to EC-232, "Component Inspection".

OK or NG

OK >> GO TO 5.
NG >> GO TO 6.

5. CHECK FUEL INJECTOR-II

With CONSULT-III

1. Remove two fuel injectors.
   NOTE:
   One is from malfunctioning cylinder and the other is from any cylinder other than the malfunctioning cylinder.
2. Swap the two fuel injectors to the other cylinder.
3. Reconnect ECM harness connector and fuel injector harness connector.
4. Turn ignition switch ON.
5. Perform Injector Adjustment Value Registration. Refer to EC-22, "Injector Adjustment Value Registration".
6. Select “SELF DIAG RESULTS” mode with CONSULT-III.
7. Touch “ERASE”.
8. Perform EC-227, "DTC Confirmation Procedure".
9. Is DTC displayed for the other cylinder?

With GST

1. Remove two fuel injectors.
   NOTE:
   One is from malfunctioning cylinder and the other is from any cylinder other than the malfunctioning cylinder.
2. Swap the two fuel injectors to the other cylinder.
3. Reconnect ECM harness connector and fuel injector harness connector.
4. Turn ignition switch ON.
5. Perform Injector Adjustment Value Registration. Refer to EC-22, "Injector Adjustment Value Registration".
6. Select Service $04 with GST.
7. Perform EC-227, "DTC Confirmation Procedure".
8. Is DTC displayed for the other cylinder?

Yes or No

Yes >> GO TO 6.
No >> GO TO 7.

6. REPLACE FUEL INJECTOR

1. Replace fuel injector of malfunctioning cylinder.
2. Perform Injector Adjustment Value Registration. Refer to EC-22, "Injector Adjustment Value Registration".

>> **INSPECTION END**

7. CHECK INTERMITTENT INCIDENT

Refer to EC-70.

>> **INSPECTION END**

Component Inspection

INFOID:0000000003759691

FUEL INJECTOR

1. Disconnect fuel injector harness connector.

2. Check resistance between terminals as shown in the figure.

Resistance: 0.2 - 0.8 Ω [at 10 - 60°C (50 - 140°F)]

3. If NG, replace fuel injector.

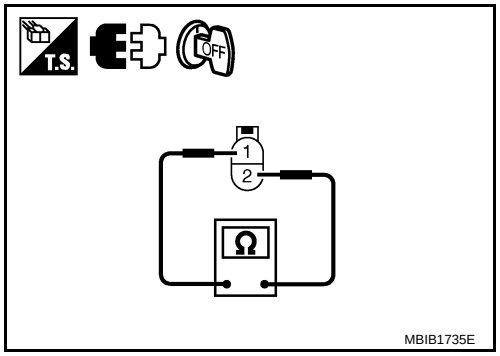

Removal and Installation

INFOID:0000000003759692

FUEL INJECTOR

Refer to EM-8.

DTC P1272 FUEL PUMP

Description

INFOID:0000000003759693

When the fuel pressure in fuel rail increases to excessively high, fuel pressure relief valve (1) opens to carry excess fuel to the return hose.

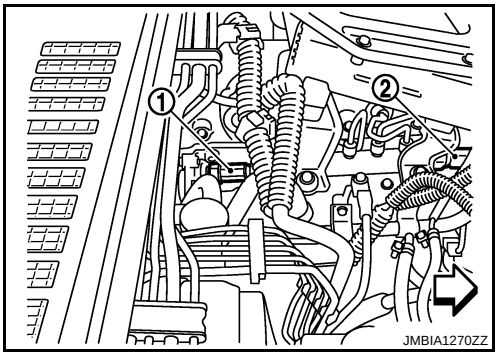

⇦ : Vehicle front

- Fuel rail pressure sensor (2)

CONSULT-III Reference Value in Data Monitor Mode

INFOID:0000000003759694

Specification data are reference values.

MONITOR ITEM	CONDITION		SPECIFICATION
PUMP CURRENT	• Engine: After warming up • Air conditioner switch: OFF • Shift lever: Neutral • No load	Idle	1,600 - 2,000 mA
		2,000 rpm	1,500 - 1,900 mA

On Board Diagnosis Logic

INFOID:0000000003759695

NOTE:
If DTC P1272 is displayed with DTC P0652 or P0653, first perform trouble diagnosis for DTC P0652 or P0653. Refer to EC-214.

DTC No.	Trouble diagnosis name	DTC detecting condition	Possible cause
P1272 1272	Fuel rail pressure relief valve open	Fuel rail pressure relief valve is open because of fuel pressure control system malfunction.	• Harness or connectors (Fuel pump circuit is open or shorted.) • Fuel pump • Fuel rail pressure sensor • Air mixed with fuel • Lack of fuel

DTC Confirmation Procedure

INFOID:0000000003759696

NOTE:
If DTC Confirmation Procedure has been previously conducted, always turn ignition switch OFF and wait at least 10 seconds before conducting the next test.

1. Start engine and keep engine speed more than 4,000 rpm for at least 5 seconds, then release the accelerator pedal.
2. Check 1st trip DTC.
3. If 1st trip DTC is detected, go to EC-236, "Diagnosis Procedure".

Wiring Diagram

INFOID:0000000003759697

EC-F/PUMP-01

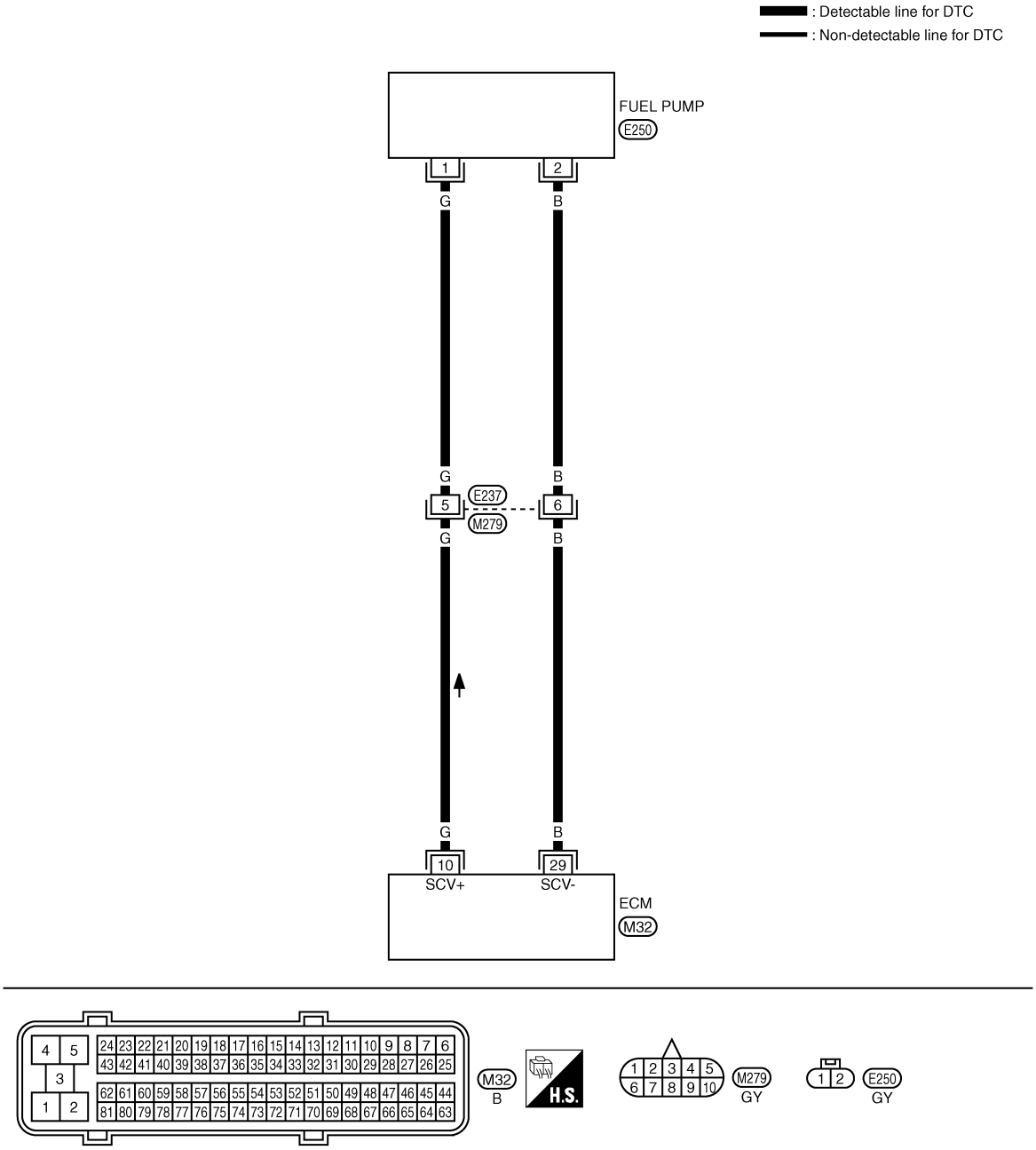

Specification data are reference values and are measured between each terminal and ground.
Pulse signal is measured by CONSULT-III.

TERMINAL NO. (Wire color)		Description	Condition	Value (Approx.)
+	–	Signal name		
10 (G)	114 (B)	Fuel pump	**[Engine is running]** • **Warm-up condition** • Idle speed	Approximately 5.8 V ★ 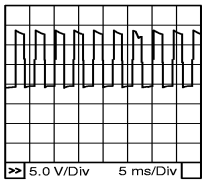 MBIB0885E
			[Engine is running] • **Warm-up condition** • Engine speed: 2,000 rpm	Approximately 5.5 V ★ 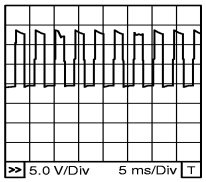 MBIB0886E
29 (B)	114 (B)	Fuel pump	**[Engine is running]** • **Warm-up condition** • Idle speed	Approximately 0.3 V ★ 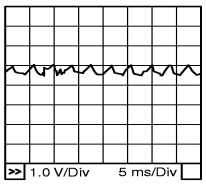 MBIB0887E
			[Engine is running] • **Warm-up condition** • Engine speed: 2,000 rpm	Approximately 0.3 V ★ 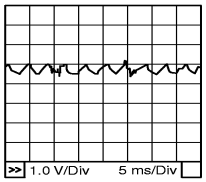 MBIB0888E

★: Average voltage for pulse signal (Actual pulse signal can be confirmed by oscilloscope.)

Diagnosis Procedure

INFOID:0000000003759698

1. PERFORM FUEL PUMP LEARNING VALUE CLEARING

NOTE:
If the DTC is detected because of air mixed with fuel (i.e.: caused by lack of fuel), it may become normal by performing following procedure.

With CONSULT-III

1. Turn ignition switch ON.
2. Perform Fuel Pump Learning Value Clearing. Refer to EC-23, "Fuel Pump Learning Value Clearing".
3. Start engine and let it idle for at least 60 seconds.
4. Select “SELF-DIAG RESULT” mode with CONSULT-III.
5. Touch “ERASE”.
6. Perform EC-234, "DTC Confirmation Procedure", again.
7. Is 1st trip DTC detected again?

With GST

1. Turn ignition switch ON.
2. Perform Fuel Pump Learning Value Clearing. Refer to EC-23, "Fuel Pump Learning Value Clearing".
3. Start engine and let it idle for at least 60 seconds.
4. Select Service $04 with GST.
5. Perform EC-234, "DTC Confirmation Procedure", again.

6. Is 1st trip DTC detected again?

Yes or No

Yes >> GO TO 2.
No >> **INSPECTION END**

2. CHECK FUEL PUMP POWER SUPPLY CIRCUIT FOR OPEN AND SHORT

1. Turn ignition switch OFF.
2. Disconnect ECM harness connector and fuel pump (2) harness connector.
- Fuel pump temperature sensor (1)
3. Check harness continuity between ECM terminal 10 and fuel pump terminal 1.
   Refer to Wiring Diagram.

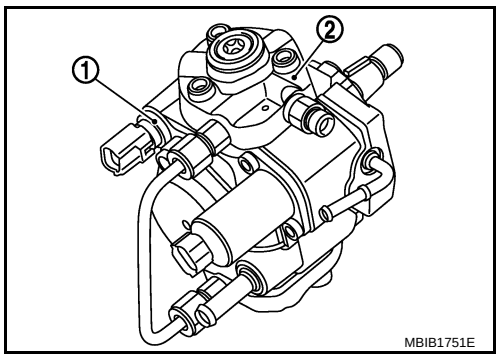

Continuity should exist.

4. Also check harness for short to ground and short to power.

OK or NG

OK >> GO TO 4.
NG >> GO TO 3.

3. DETECT MALFUNCTIONING PART

Check the following.
- Harness connectors E237, M279
- Harness for open or short between fuel pump temperature sensor and ECM

>> Repair open circuit or short to ground or short to power in harness or connectors.

4. CHECK FUEL PUMP GROUND CIRCUIT FOR OPEN AND SHORT

1. Check harness continuity between ECM terminal 29 and fuel pump terminal 2.
   Refer to Wiring Diagram.

Continuity should exist.

2. Also check harness for short to ground and short to power.

OK or NG

OK >> GO TO 6.
NG >> GO TO 5.

5. DETECT MALFUNCTIONING PART

Check the following.
- Harness connectors E237, M279
- Harness for open or short between fuel pump temperature sensor and ECM

>> Repair open circuit or short to ground or short to power in harness or connectors.

6. CHECK FUEL PUMP

Refer to EC-238, "Component Inspection".

OK or NG

OK >> GO TO 8.
NG >> GO TO 7.

7. REPLACE FUEL PUMP

1. Replace fuel pump.
2. Perform Fuel Pump Learning Value Clearing. Refer to EC-23, "Fuel Pump Learning Value Clearing".

>> **INSPECTION END**

8. CHECK FUEL RAIL PRESSURE SENSOR

Refer to EC-131, "Component Inspection".

OK or NG

OK >> GO TO 9.
NG >> Replace fuel rail.

9. CHECK INTERMITTENT INCIDENT

Refer to EC-70.

>> **INSPECTION END**

Component Inspection

INFOID:0000000003759699

FUEL PUMP

1. Disconnect fuel pump harness connector.
2. Check resistance between fuel pump terminals 1 and 2.

Resistance: 1.5 - 3.0 Ω [at 10 - 60°C (50 - 140°F)]

3. If NG, replace fuel pump.

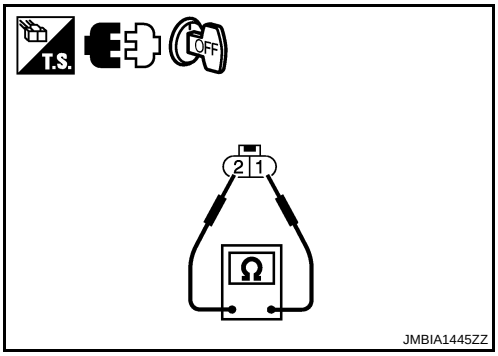

Removal and Installation

INFOID:0000000003759700

FUEL RAIL

Refer to EM-8.

FUEL PUMP

Refer to EC-24.

DTC P1273 FUEL PUMP

Description

INFOID:0000000003759701

To control the amount of the fuel inhalation of the fuel pump, a plunger is built into the fuel pump. When the amount of the fuel inhalation of fuel pump increases, the fuel raises the fuel exhalation pressure. As a result, the fuel injection pressure is raised. When the load of the engine increases, the ECM sends a signal to the fuel pump to raise the injection pressure.

CONSULT-III Reference Value in Data Monitor Mode

INFOID:0000000003759702

Specification data are reference values.

MONITOR ITEM	CONDITION		SPECIFICATION
PUMP CURRENT	• Engine: After warming up • Air conditioner switch: OFF • Shift lever: Neutral • No load	Idle	1,600 - 2,000 mA
		2,000 rpm	1,500 - 1,900 mA

On Board Diagnosis Logic

INFOID:0000000003759703

NOTE:
- **If DTC P1273 is displayed with DTC P0652 or P0653, first perform trouble diagnosis for DTC P0652 or P0653. Refer to EC-214.**

DTC No.	Trouble diagnosis name	DTC detecting condition	Possible cause
P1273 1273	Fuel pump insufficient flow	ECM detects the abnormal pulse of fuel pressure.	• Harness or connectors (The fuel pump circuit is open or shorted.) • Fuel pump • Injector adjustment value • Air mixed with fuel • Lack of fuel

DTC Confirmation Procedure

INFOID:0000000003759704

NOTE:
If DTC Confirmation Procedure has been previously conducted, always turn ignition switch OFF and wait at least 10 seconds before conducting the next test.

1. Start engine and warm it up to normal operating temperature.
2. Keep engine speed more than 2,000 rpm for at least 10 seconds.
3. Check 1st trip DTC.
4. If 1st trip DTC is detected, go to EC-241, "Diagnosis Procedure".

Wiring Diagram

INFOID:0000000003759705

EC-F/PUMP-01

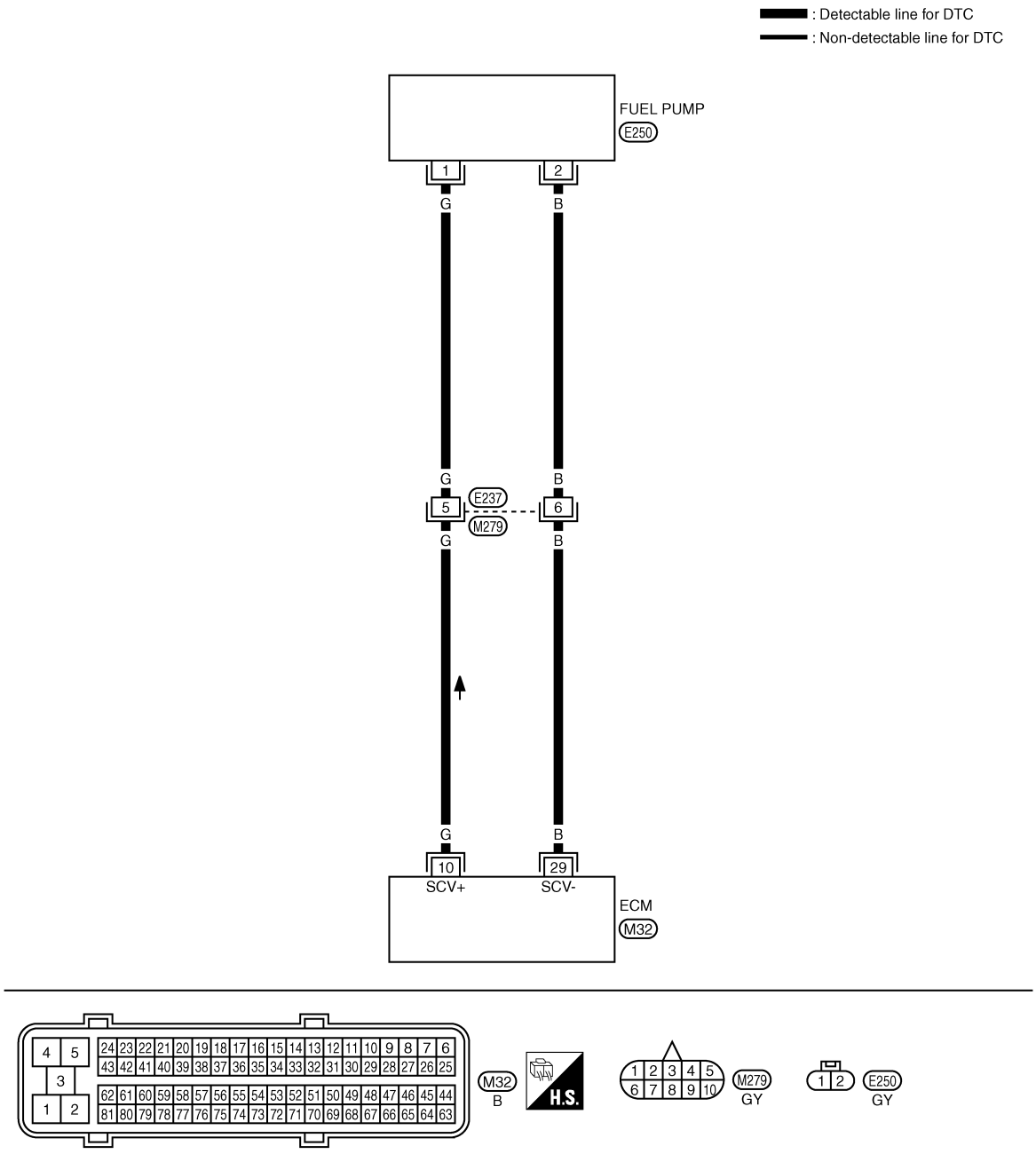

Specification data are reference values and are measured between each terminal and ground.
Pulse signal is measured by CONSULT-III.

TERMINAL NO. (Wire color)		Description	Condition	Value (Approx.)
+	–	Signal name		
10 (G)	114 (B)	Fuel pump	**[Engine is running]** • **Warm-up condition** • Idle speed	Approximately 5.8 V ★ 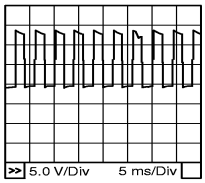 MBIB0885E
			[Engine is running] • **Warm-up condition** • Engine speed: 2,000 rpm	Approximately 5.5 V ★ 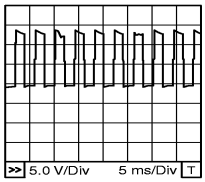 MBIB0886E
29 (B)	114 (B)	Fuel pump	**[Engine is running]** • **Warm-up condition** • Idle speed	Approximately 0.3 V ★ 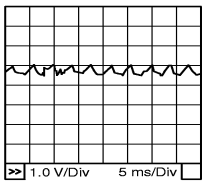 MBIB0887E
			[Engine is running] • **Warm-up condition** • Engine speed: 2,000 rpm	Approximately 0.3 V ★ 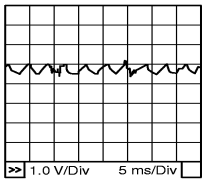 MBIB0888E

★: Average voltage for pulse signal (Actual pulse signal can be confirmed by oscilloscope.)

Diagnosis Procedure

INFOID:0000000003759706

1. CHECK INJECTOR ADJUSTMENT VALUE

1. Turn ignition switch ON.
2. Select “ENTER INJCTR CALIB DATA” in “WORK SUPPORT” mode with CONSULT-III.
3. Check injector adjustment values displayed on CONSULT-III screen.

The value displayed on CONSULT-III screen should be same as injector adjustment value printed on each fuel injector.

OK or NG

OK >> GO TO 2.
NG >> Perform Injector Adjustment Value Registration. Refer to EC-22, "Injector Adjustment Value Registration".

2. PERFORM FUEL PUMP LEARNING VALUE CLEARING

NOTE:
If the DTC is detected because of air mixed with fuel (i.e.: caused by lack of fuel), it may become normal by performing following procedure.

With CONSULT-III

1. Turn ignition switch ON.
2. Perform Fuel Pump Learning Value Clearing. Refer to EC-23, "Fuel Pump Learning Value Clearing".
3. Start engine and let it idle for at least 60 seconds.
4. Select “SELF-DIAG RESULT” mode with CONSULT-III.
5. Touch “ERASE”.
6. Perform EC-239, "DTC Confirmation Procedure", again.
7. Is 1st trip DTC detected again?

With GST

1. Turn ignition switch ON.
2. Perform Fuel Pump Learning Value Clearing. Refer to EC-23, "Fuel Pump Learning Value Clearing".
3. Start engine and let it idle for at least 60 seconds.
4. Select Service $04 with GST.
5. Perform EC-239, "DTC Confirmation Procedure", again.
6. Is 1st trip DTC detected again?

Yes or No

Yes >> GO TO 3.
No >> **INSPECTION END**

3. CHECK FUEL PUMP POWER SUPPLY CIRCUIT FOR OPEN AND SHORT

1. Turn ignition switch OFF.
2. Disconnect ECM harness connector and fuel pump (2) harness connector.
- Fuel pump temperature sensor (1)
3. Check harness continuity between ECM terminal 10 and fuel pump terminal 1.
   Refer to Wiring Diagram.

Continuity should exist.

4. Also check harness for short to ground and short to power.

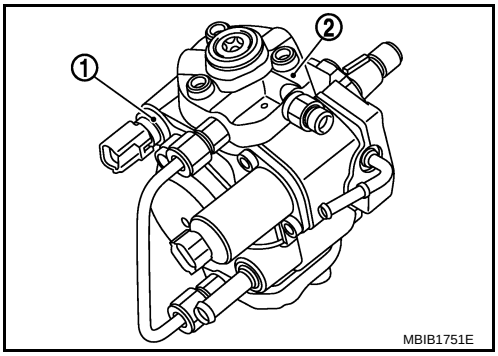

OK or NG

OK >> GO TO 5.
NG >> GO TO 4.

4. DETECT MALFUNCTIONING PART

Check the following.
- Harness connectors E237, M279
- Harness for open or short between fuel pump temperature sensor and ECM

>> Repair open circuit or short to ground or short to power in harness or connectors.

5. CHECK FUEL PUMP GROUND CIRCUIT FOR OPEN AND SHORT

1. Check harness continuity between ECM terminal 29 and fuel pump terminal 2.
   Refer to Wiring Diagram.

Continuity should exist.

2. Also check harness for short to ground and short to power.

OK or NG

OK >> GO TO 7.
NG >> GO TO 6.

6. DETECT MALFUNCTIONING PART

Check the following.
- Harness connectors E237, M279
- Harness for open or short between fuel pump temperature sensor and ECM

>> Repair open circuit or short to ground or short to power in harness or connectors.

7. CHECK FUEL PUMP

Refer to EC-243, "Component Inspection".

OK or NG

OK >> GO TO 9.
NG >> GO TO 8.

8. REPLACE FUEL PUMP

1. Replace fuel pump.
2. Perform Fuel Pump Learning Value Clearing. Refer to EC-23, "Fuel Pump Learning Value Clearing".

>> **INSPECTION END**

9. CHECK INTERMITTENT INCIDENT

Refer to EC-70.

>> **INSPECTION END**

Component Inspection

INFOID:0000000003759707

FUEL PUMP

1. Disconnect fuel pump harness connector.
2. Check resistance between fuel pump terminals 1 and 2.

Resistance: 1.5 - 3.0 Ω [at 10 - 60°C (50 - 140°F)]

3. If NG, replace fuel pump.

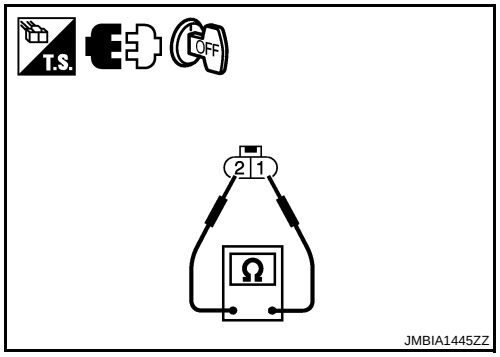

Removal and Installation

INFOID:0000000003759708

FUEL PUMP

Refer to EC-24.

DTC P1274 FUEL PUMP

Description

INFOID:0000000003759709

To control the amount of the fuel inhalation of the fuel pump, a plunger is built into the fuel pump. When the amount of the fuel inhalation of fuel increases, the fuel pump raises the fuel exhalation pressure. As a result, the fuel injection pressure is raised. When the load of the engine increases, the ECM sends a signal to the fuel pump to raise the injection pressure.

CONSULT-III Reference Value in Data Monitor Mode

INFOID:0000000003759710

Specification data are reference values.

MONITOR ITEM	CONDITION		SPECIFICATION
PUMP CURRENT	• Engine: After warming up • Air conditioner switch: OFF • Shift lever: Neutral • No load	Idle	1,600 - 2,000 mA
		2,000 rpm	1,500 - 1,900 mA

On Board Diagnosis Logic

INFOID:0000000003759711

This self-diagnosis has the one trip detection logic.
NOTE:
If DTC P1274 is displayed with DTC P0652 or P0653, first perform trouble diagnosis for DTC P0652 or P0653. Refer to EC-214.

DTC No.	Trouble diagnosis name	DTC detecting condition	Possible cause
P1274 1274	Fuel pump protection	Fuel pressure is too much higher than the target value.	• Harness or connectors (The fuel pump circuit is open or shorted.) • Fuel pump • Fuel rail pressure sensor

DTC Confirmation Procedure

INFOID:0000000003759712

NOTE:
If DTC Confirmation Procedure has been previously conducted, always turn ignition switch OFF and wait at least 10 seconds before conducting the next test.

1. Tuning ignition switch ON.
2. Start engine and let idle for at least 5 seconds.
3. Check DTC.
4. If DTC is detected, go to EC-246, "Diagnosis Procedure".

Wiring Diagram

INFOID:0000000003759713

EC-F/PUMP-01

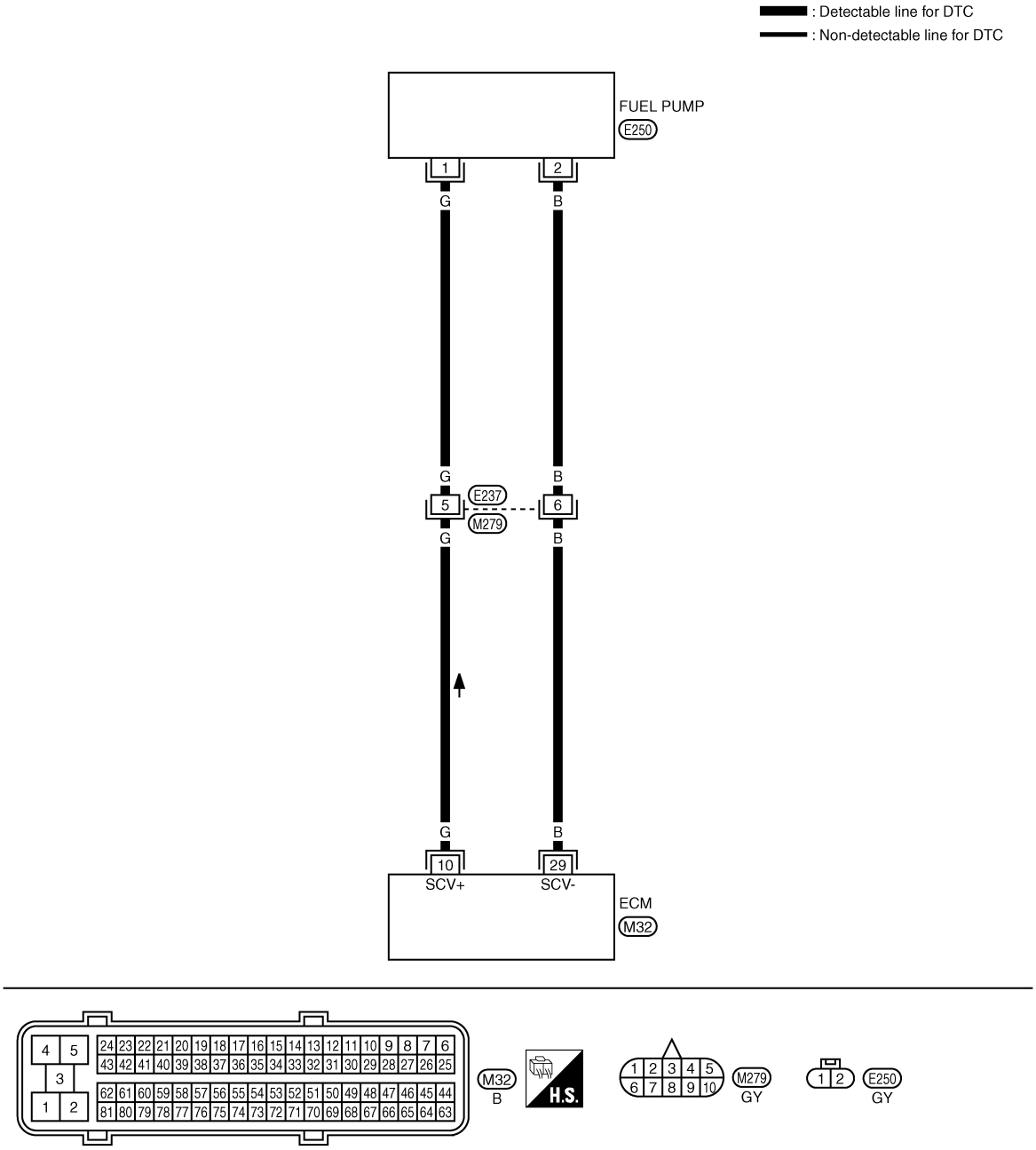

Specification data are reference values and are measured between each terminal and ground.
Pulse signal is measured by CONSULT-III.

TERMINAL NO. (Wire color)		Description	Condition	Value (Approx.)
+	–	Signal name		
10 (G)	114 (B)	Fuel pump	**[Engine is running]** • **Warm-up condition** • Idle speed	Approximately 5.8 V ★ 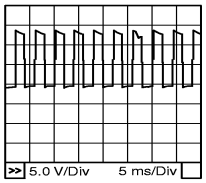 MBIB0885E
			[Engine is running] • **Warm-up condition** • Engine speed: 2,000 rpm	Approximately 5.5 V ★ 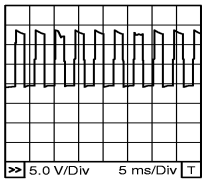 MBIB0886E
29 (B)	114 (B)	Fuel pump	**[Engine is running]** • **Warm-up condition** • Idle speed	Approximately 0.3 V ★ 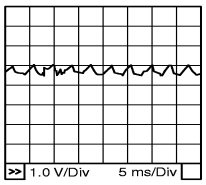 MBIB0887E
			[Engine is running] • **Warm-up condition** • Engine speed: 2,000 rpm	Approximately 0.3 V ★ 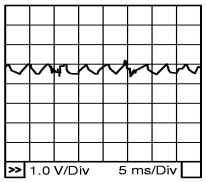 MBIB0888E

★: Average voltage for pulse signal (Actual pulse signal can be confirmed by oscilloscope.)

Diagnosis Procedure

INFOID:0000000003759714

1. CHECK ECM OUTPUT SIGNAL CIRCUIT FOR OPEN AND SHORT

1. Turn ignition switch OFF.
2. Disconnect ECM harness connector and fuel pump (2) harness connector.
- Fuel pump temperature sensor (1)
3. Check harness continuity between ECM terminal 10 and fuel pump terminal 1.
   Refer to Wiring Diagram.

   Continuity should exist.

4. Also check harness for short to ground and short to power.

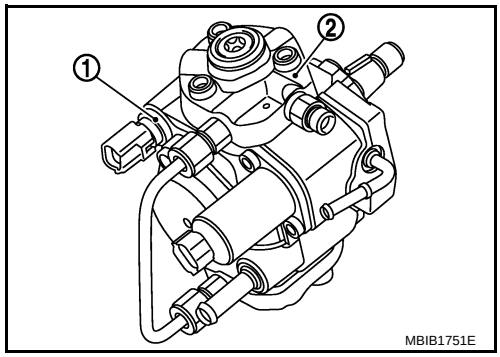

OK or NG

OK >> GO TO 3.
NG >> GO TO 2.

2. DETECT MALFUNCTIONING PART

Check the following.

- Harness connectors E237, M279
- Harness for open or short between fuel pump temperature sensor and ECM

>> Repair open circuit or short to ground or short to power in harness or connectors.

3. CHECK FUEL PUMP GROUND CIRCUIT FOR OPEN AND SHORT

1. Check harness continuity between ECM terminal 29 and fuel pump terminal 2.
   Refer to Wiring Diagram.

   Continuity should exist.

2. Also check harness for short to ground and short to power.

OK or NG

OK >> GO TO 5.
NG >> GO TO 4.

4. DETECT MALFUNCTIONING PART

Check the following.
- Harness connectors E237, M279
- Harness for open or short between fuel pump temperature sensor and ECM

>> Repair open circuit or short to ground or short to power in harness or connectors.

5. CHECK FUEL RAIL PRESSURE SENSOR

Refer to EC-131, "Component Inspection".

OK or NG

OK >> GO TO 6.
NG >> Replace fuel rail.

6. CHECK FUEL PUMP

Refer to EC-247, "Component Inspection".

OK or NG

OK >> GO TO 8.
NG >> GO TO 7.

7. REPLACE FUEL PUMP

1. Replace fuel pump.
2. Perform Fuel Pump Learning Valve Clearing. Refer to EC-23, "Fuel Pump Learning Value Clearing".

>> **INSPECTION END**

8. CHECK INTERMITTENT INCIDENT

Refer to EC-70.

>> **INSPECTION END**

Component Inspection

INFOID:0000000003759715

FUEL PUMP

1. Disconnect fuel pump harness connector.

2. Check resistance between fuel pump terminals 1 and 2.

Resistance: 1.5 - 3.0 Ω [at 10 - 60°C (50 - 140°F)]

3. If NG, replace fuel pump.

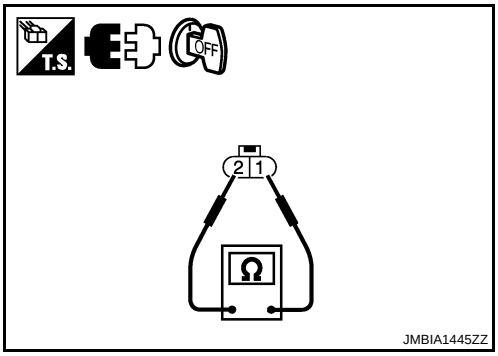

Removal and Installation

INFOID:0000000003759716

FUEL PUMP

Refer to EC-24.

DTC P1275 FUEL PUMP

Description

INFOID:0000000003759717

To control the amount of the fuel inhalation of the fuel pump, a plunger is built into the fuel pump. When the amount of the fuel inhalation of fuel increases, the fuel pump raises the fuel exhalation pressure. As a result, the fuel injection pressure is raised. When the load of the engine increases, the ECM sends a signal to fuel pump to raise the injection pressure.

CONSULT-III Reference Value in Data Monitor Mode

INFOID:0000000003759718

Specification data are reference values.

MONITOR ITEM	CONDITION		SPECIFICATION
PUMP CURRENT	• Engine: After warming up • Air conditioner switch: OFF • Shift lever: Neutral • No load	Idle	1,600 - 2,000 mA
		2,000 rpm	1,500 - 1,900 mA

On Board Diagnosis Logic

INFOID:0000000003759719

This self-diagnosis has the one trip detection logic.
NOTE:
If DTC P1275 is displayed with DTC P0652 or P0653, first perform trouble diagnosis for DTC P0652 or P0653. Refer to EC-214.

DTC No.	Trouble diagnosis name	DTC detecting condition	Possible cause
P1275 1275	Fuel pump exchange	Fuel pressure is too much higher than the target value.	• Harness or connectors (The fuel pump circuit is open or shorted.) • Fuel pump • Fuel rail pressure sensor

DTC Confirmation Procedure

INFOID:0000000003759720

NOTE:
If DTC Confirmation Procedure has been previously conducted, always turn ignition switch OFF and wait at least 10 seconds before conducting the next test.

1. Start engine and warm it up to normal operating temperature.
2. Keep engine speed more than 2,000 rpm for at least 60 seconds.
3. Check DTC.
4. If DTC is detected, go to EC-251, "Diagnosis Procedure".

Wiring Diagram

INFOID:0000000003759721

EC-F/PUMP-01

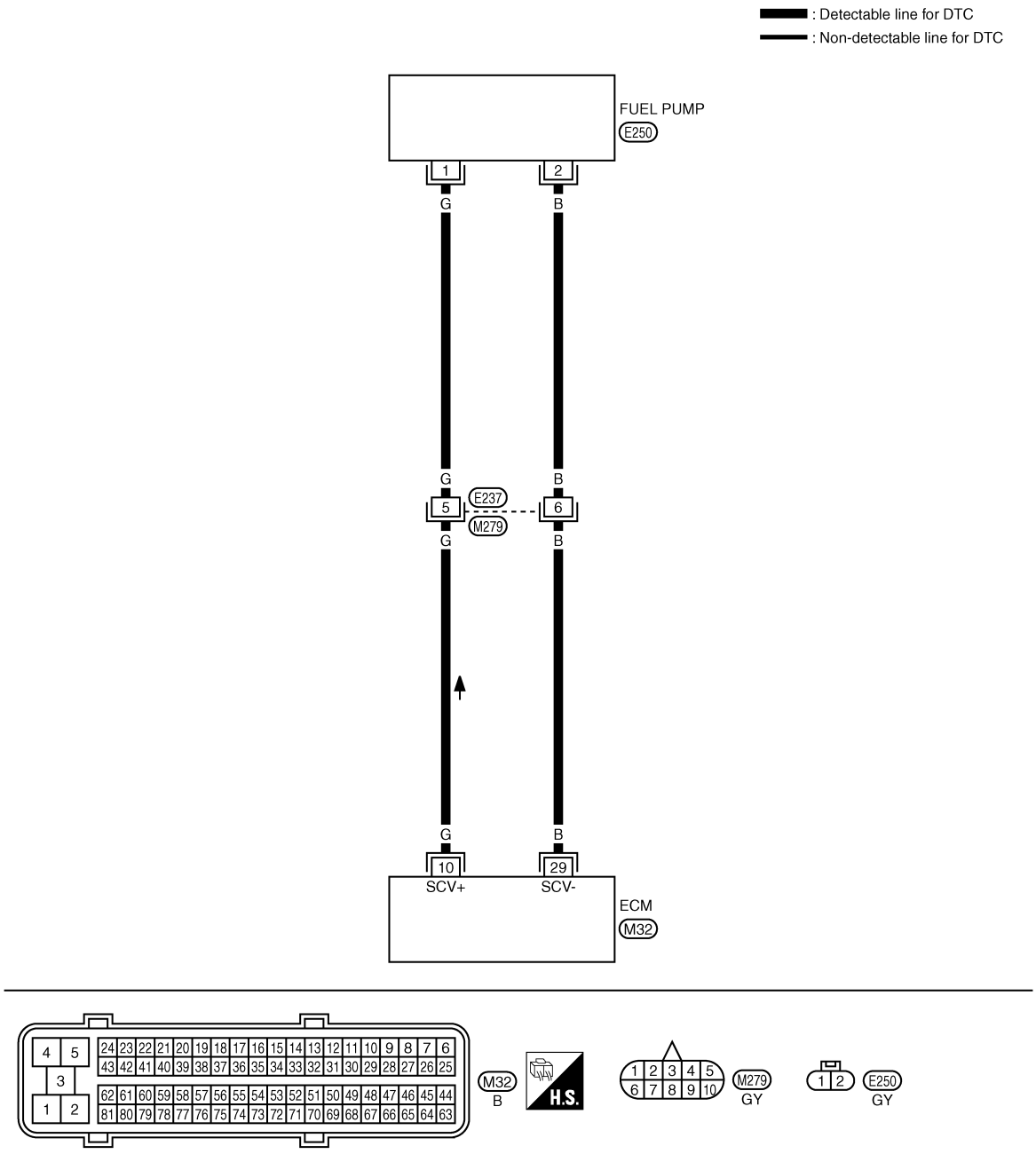

Specification data are reference values and are measured between each terminal and ground.
Pulse signal is measured by CONSULT-III.

TERMINAL NO. (Wire color) +	TERMINAL NO. (Wire color) –	Description Signal name	Condition	Value (Approx.)
10 (G)	114 (B)	Fuel pump	**[Engine is running]** • **Warm-up condition** • Idle speed	Approximately 5.8 V ★ 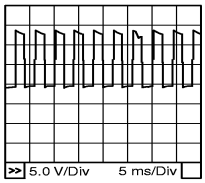 MBIB0885E
			[Engine is running] • **Warm-up condition** • Engine speed: 2,000 rpm	Approximately 5.5 V ★ 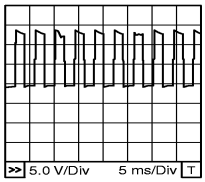 MBIB0886E
29 (B)	114 (B)	Fuel pump	**[Engine is running]** • **Warm-up condition** • Idle speed	Approximately 0.3 V ★ 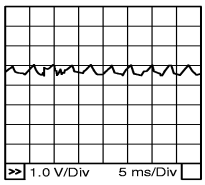 MBIB0887E
			[Engine is running] • **Warm-up condition** • Engine speed: 2,000 rpm	Approximately 0.3 V ★ 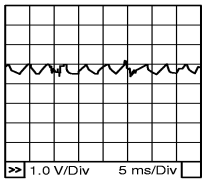 MBIB0888E

★: Average voltage for pulse signal (Actual pulse signal can be confirmed by oscilloscope.)

Diagnosis Procedure

INFOID:0000000003759722

1. CHECK ECM OUTPUT SIGNAL CIRCUIT FOR OPEN AND SHORT

1. Turn ignition switch OFF.
2. Disconnect ECM harness connector and fuel pump (2) harness connector.
- Fuel pump temperature sensor (1)
3. Check harness continuity between ECM terminal 10 and fuel pump terminal 1.
   Refer to Wiring Diagram.

   Continuity should exist.

4. Also check harness for short to ground and short to power.

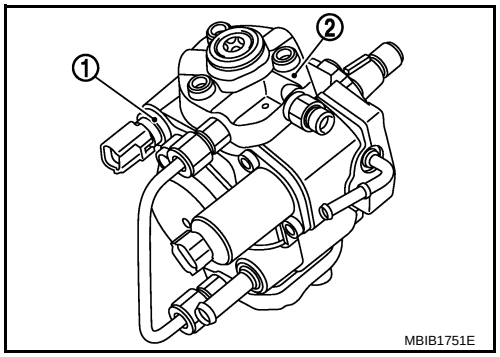

OK or NG

OK >> GO TO 3.
NG >> GO TO 2.

2. DETECT MALFUNCTIONING PART

Check the following.

- Harness connectors E237, M279
- Harness for open or short between fuel pump temperature sensor and ECM

>> Repair open circuit or short to ground or short to power in harness or connectors.

3. CHECK FUEL PUMP GROUND CIRCUIT FOR OPEN AND SHORT

1. Check harness continuity between ECM terminal 29 and fuel pump terminal 2.
   Refer to Wiring Diagram.

   Continuity should exist.

2. Also check harness for short to ground and short to power.

OK or NG

OK >> GO TO 5.
NG >> GO TO 4.

4. DETECT MALFUNCTIONING PART

Check the following.
- Harness connectors E237, M279
- Harness for open or short between fuel pump temperature sensor and ECM

>> Repair open circuit or short to ground or short to power in harness or connectors.

5. CHECK FUEL RAIL PRESSURE SENSOR

Refer to EC-131, "Component Inspection".

OK or NG

OK >> GO TO 6.
NG >> Replace fuel rail.

6. CHECK FUEL PUMP

Refer to EC-252, "Component Inspection".

OK or NG

OK >> GO TO 8.
NG >> GO TO 7.

7. REPLACE FUEL PUMP

1. Replace fuel pump.
2. Perform Fuel Pump Learning Valve Clearing. Refer to EC-23, "Fuel Pump Learning Value Clearing".

>> **INSPECTION END**

8. CHECK INTERMITTENT INCIDENT

Refer to EC-70.

>> **INSPECTION END**

Component Inspection

INFOID:0000000003759723

FUEL PUMP

1. Disconnect fuel pump harness connector.

2. Check resistance between fuel pump terminals 1 and 2.

Resistance: 1.5 - 3.0 Ω [at 10 - 60°C (50 - 140°F)]

3. If NG, replace fuel pump.

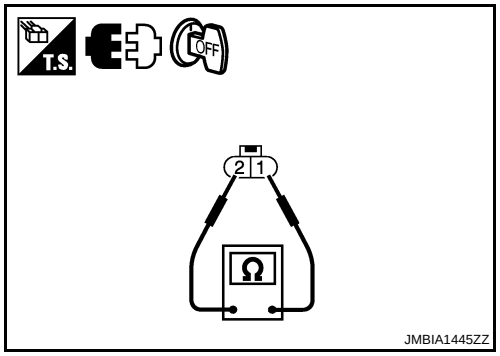

Removal and Installation

INFOID:0000000003759724

FUEL PUMP

Refer to EC-24.

DTC P1622 INJECTOR ADJUSTMENT VALUE

Description

INFOID:0000000003759733

Injector adjustment value indicates manufacturing tolerance and the value is printed on the top of fuel injector.The injector adjustment value which is correctly stored in ECM is needed for precise fuel injection control. A performance of emission control and a drivability may effect when there is a mismatch between the following two values.

- The injector adjustment value stored in ECM
- The injector adjustment value of the fuel injector which is installed on the vehicle

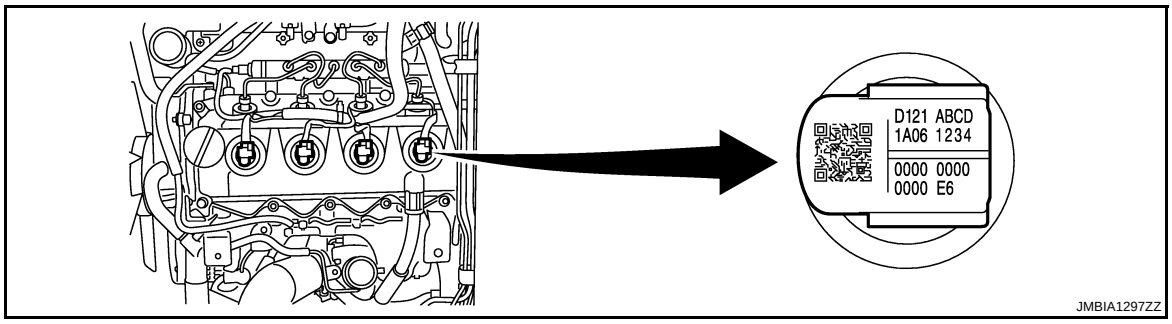

Example: Injector adjustment value = D121ABCD1A0612340000000000000E6

On Board Diagnosis Logic

INFOID:0000000003759734

This self-diagnosis has the one trip detection logic.
The MI will not light up for this self-diagnosis.

DTC No.	Trouble diagnosis name	DTC detecting condition	Possible cause
P1622 1622	Injector adjustment value data uninput	Injector adjustment value is not stored in ECM.	• Injector adjustment value (Injector adjustment value has not been written onto ECM memory yet, or the value has been initialized.)

DTC Confirmation Procedure

INFOID:0000000003759735

NOTE:
If DTC Confirmation Procedure has been previously conducted, always turn ignition switch OFF and wait at least 10 seconds before conducting the next test.

1. Turn ignition switch ON.
2. Wait at least 5 seconds.
3. Check DTC.
4. If DTC is detected, go to EC-254, "Diagnosis Procedure".

Diagnosis Procedure

INFOID:0000000003759736

1. PERFORM INJECTOR ADJUSTMENT VALUE REGISTRATION

Perform Injector Adjustment Value Registration. Refer to EC-22, "Injector Adjustment Value Registration".

>> **INSPECTION END**

DTC P1623 INJECTOR ADJUSTMENT VALUE

Description

INFOID:0000000003759737

Injector adjustment value indicates manufacturing tolerance and the value is printed on the top of fuel injector. The injector adjustment value which is correctly stored in ECM is needed for precise fuel injection control.
A performance of emission control and a drivability may effect when there is a mismatch between the following two values.

- The injector adjustment value stored in ECM
- The injector adjustment value of the fuel injector which is installed on the vehicle

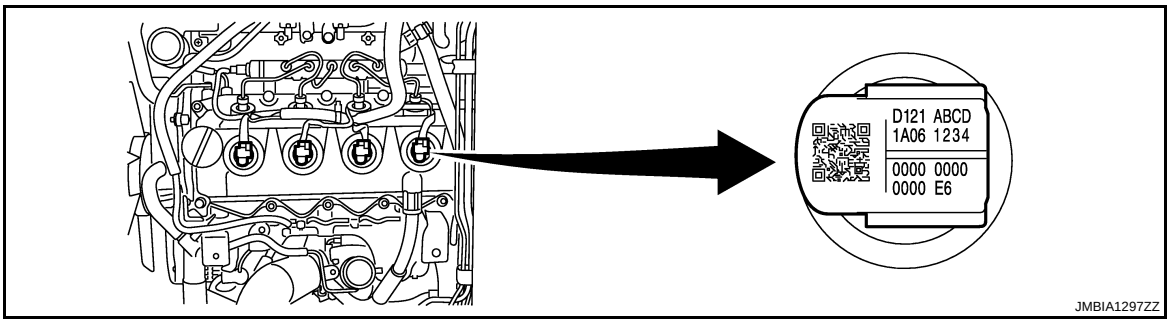

Example: Injector adjustment value = D121ABCD1A061234000000000000E6

On Board Diagnosis Logic

INFOID:0000000003759738

This self-diagnosis has the one trip detection logic.
The MI will not light up for this self-diagnosis.

DTC No.	Trouble diagnosis name	DTC detecting condition	Possible cause
P1623 1623	Injector adjustment value data error	ECM detects the abnormal value of injector adjustment value.	• CONSULT-III communication status (The status of CONSULT-III communication becomes improper during Injector Adjustment Value Registration.) • ECM

NOTE:
This DTC is not detected when injector adjustment value (not correct but existent) is stored in ECM.

DTC Confirmation Procedure

INFOID:0000000003759739

NOTE:
If DTC Confirmation Procedure has been previously conducted, always turn ignition switch OFF and wait at least 10 seconds before conducting the next test.

1. Turn ignition switch ON.
2. Wait at least 5 seconds.
3. Check DTC.
4. If DTC is detected, go to EC-255, "Diagnosis Procedure".

Diagnosis Procedure

INFOID:0000000003759740

1. CHECK INJECTOR ADJUSTMENT VALUE

1. Turn ignition switch ON.
2. Select “ENTER INJCTR CALIB DATA” in “WORK SUPPORT” mode with CONSULT-III.
3. Check injector adjustment values displayed on CONSULT-III screen.

The value displayed on CONSULT-III screen should be same as injector adjustment value printed on each fuel injector.

OK or NG

OK >> GO TO 3.
NG >> GO TO 2.

2. PERFORM INJECTOR ADJUSTMENT VALUE REGISTRATION

Perform Injector Adjustment Value Registration. Refer to EC-22, "Injector Adjustment Value Registration".

NOTE:

When two or more injector adjustment value are improper, it is useful to perform “INJ ADJ VAL CLR” in “WORK SUPPORT” mode with CONSULT-III. And then perform Injector Adjustment Value Registration.

>> GO TO 3.

3. PERFORM DTC CONFIRMATION PROCEDURE

With CONSULT-III

1. Select “SELF DIAG RESULTS” mode with CONSULT-III.
2. Touch “ERASE”.
3. Perform EC-255, "DTC Confirmation Procedure", again.
4. Is DTC P1623 displayed again?

With GST

1. Select Service $04 with GST.
2. Perform EC-255, "DTC Confirmation Procedure", again.
3. Is DTC P1623 displayed again?

Yes or No

Yes >> GO TO 4.
No >> **INSPECTION END**

4. REPLACE ECM

1. Replace ECM.
2. Perform initialization of NATS system and registration of all NATS ignition key IDs. Refer to EL-96, "ECM Re-communicating Function".
3. Perform Injector Adjustment Value Registration. Refer to EC-22, "Injector Adjustment Value Registration".
4. Perform Fuel Pump Learning Value Clearing. Refer to EC-23, "Fuel Pump Learning Value Clearing".
5. Perform EGR Volume Control Valve Closed Position Learning Value Clear. Refer to EC-24, "EGR Volume Control Valve Closed Position Learning Value Clear".
6. Perform EGR Volume Control Valve Closed Position Learning. Refer to EC-24, "EGR Volume Control Valve Closed Position Learning".

>> **INSPECTION END**

DTC P2135 APP SENSOR

Description

INFOID:0000000003759759

The accelerator pedal position sensor is installed on the upper end of the accelerator pedal assembly. The sensors detect the accelerator pedal position and sends a signal to the ECM. The ECM uses the signal to determine the amount of fuel to be injected.

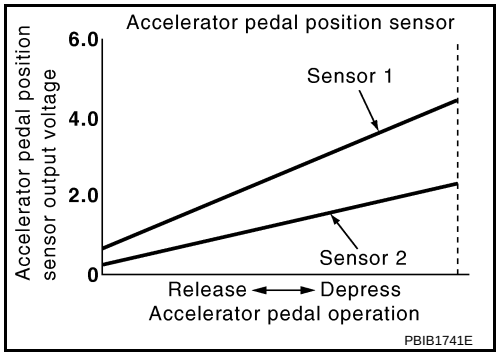

CONSULT-III Reference Value in Data Monitor Mode

INFOID:0000000003759760

Specification data are reference values.

MONITOR ITEM	CONDITION		SPECIFICATION
ACCEL POS SEN*	• Ignition switch: ON (Engine stopped)	Accelerator pedal: Fully released	0.5 - 1.0 V
		Accelerator pedal: Fully depressed	4.0 - 4.8 V
ACCEL SEN 2*	• Ignition switch: ON (Engine stopped)	Accelerator pedal: Fully released	0.3 - 1.2 V
		Accelerator pedal: Fully depressed	3.7 - 4.8 V

*: This signal is converted by ECM internally. Thus, it differs from ECM terminal voltage.

On Board Diagnosis Logic

INFOID:0000000003759761

This self-diagnosis has the one trip detection logic.
The MI will not light up for this self-diagnosis.
NOTE:
- **If DTC P2135 is displayed with DTC P0642 or P0643, first perform trouble diagnosis for DTC P0642 or P0643. Refer to EC-210.**
- **If DTC P2135 is displayed with DTC P0652 or P0653, first perform trouble diagnosis for DTC P0652 or P0653. Refer to EC-214.**

DTC No.	Trouble diagnosis name	DTC detecting condition	Possible cause
P2135 2135	Accelerator pedal position sensor 1, 2 signal correlation	The correlation between APP sensor 1 signal and APP sensor 2 signal is out of the normal range.	• Harness or connectors (The APP sensor circuit is open or shorted.) • Accelerator pedal position sensor (APP sensor 1 and 2)

DTC Confirmation Procedure

INFOID:0000000003759762

NOTE:
If DTC Confirmation Procedure has been previously conducted, always turn ignition switch OFF and wait at least 10 seconds before conducting the next test.

1. Turn ignition switch ON.
2. Wait at least 5 seconds.
3. Depress accelerator pedal slowly spending 5 seconds, and then release it slowly spending 5 seconds.
4. Check DTC.
5. If DTC is detected, go to EC-259, "Diagnosis Procedure".

Wiring Diagram

INFOID:0000000003759763

EC-APPS3-01

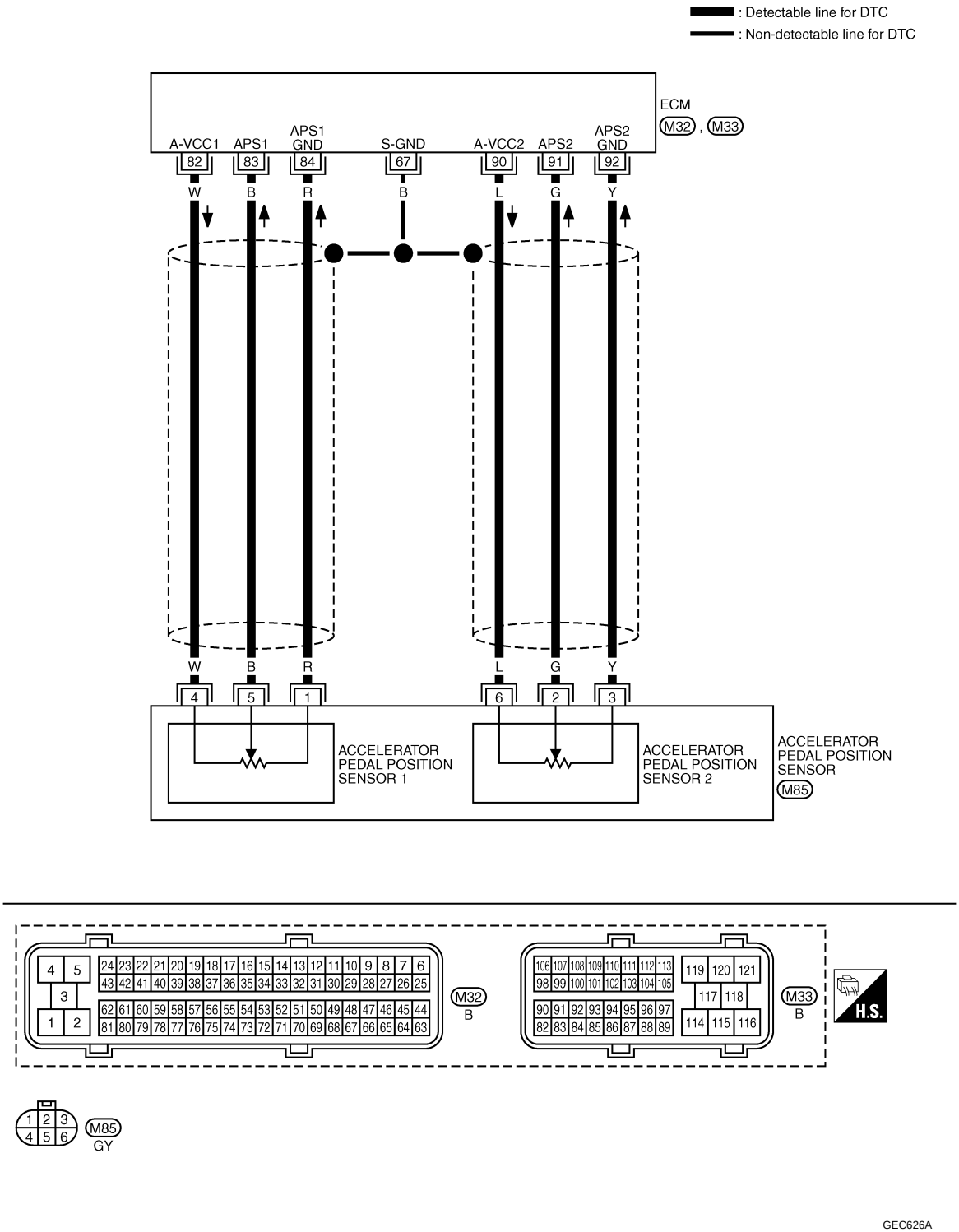

Specification data are reference values and are measured between each terminal and ground.

TERMINAL NO. (Wire color)		Description	Condition	Value (Approx.)
+	–	Signal name		
67 (B)	—	Sensor ground (Sensor shield circuit)	—	—
82 (W)	84 (R)	Sensor power supply (Accelerator pedal position sensor 1 / Crankshaft position sensor / EGR volume control valve control position sensor)	**[Ignition switch ON]**	Approximately 5 V
83 (B)	84 (R)	Accelerator pedal position sensor 1	**[Ignition switch ON]** • Engine: Stopped • Accelerator pedal: Fully released	0.5 - 1.0 V
			[Ignition switch ON] • Engine: Stopped • Accelerator pedal: Fully depressed	3.7 - 4.7 V
84 (R)	—	Accelerator pedal position sensor 1 ground	—	—
90 (L)	92 (Y)	Accelerator pedal position sensor 2 power supply	**[Ignition switch ON]**	Approximately 5 V
91 (G)	92 (Y)	Accelerator pedal position sensor 2	**[Ignition switch ON]** • Engine: Stopped • Accelerator pedal: Fully released	0.15 - 0.6 V
			[Ignition switch ON] • Engine: Stopped • Accelerator pedal: Fully depressed	1.85 - 2.4 V
92 (Y)	—	Accelerator pedal position sensor 2 ground	—	—

★: Average voltage for pulse signal (Actual pulse signal can be confirmed by oscilloscope.)

Diagnosis Procedure

INFOID:0000000003759764

1. CHECK GROUND CONNECTIONS

1. Turn ignition switch OFF.
2. Loosen and retighten ground screws on the body. Refer to EC-81, "Ground Inspection".

- Body ground M97 (1)
- Body ground M99 (2)
- ECM (3)

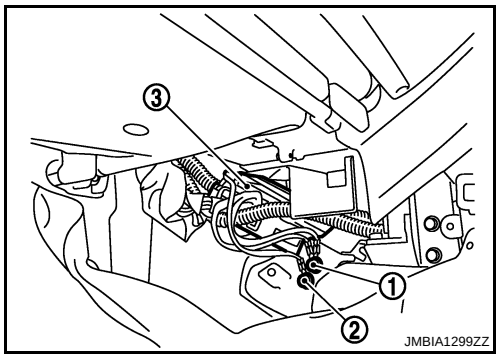

OK or NG

OK >> GO TO 2.
NG >> Repair or replace ground connections.

2. CHECK APP SENSOR POWER SUPPLY CIRCUIT

1. Disconnect accelerator pedal position (APP) sensor (1) harness connector.
2. Turn ignition switch ON.

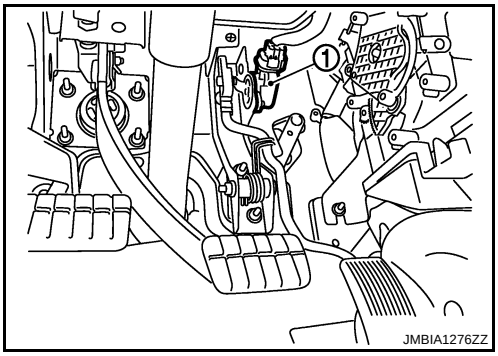

3. Check voltage between APP sensor terminals 4, 6 and ground with CONSULT-III or tester.

Voltage: Approximately 5 V

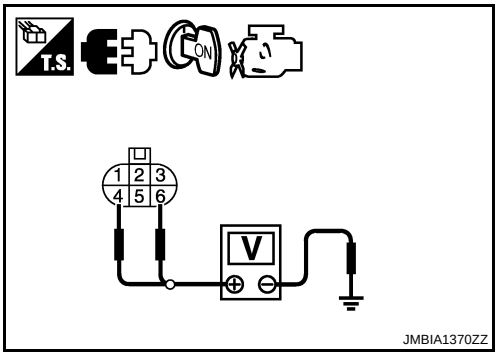

OK or NG

OK >> GO TO 3.
NG >> Repair open circuit or short to ground or short to power in harness or connectors.

3. CHECK APP SENSOR GROUND CIRCUIT FOR OPEN AND SHORT

1. Turn ignition switch OFF.
2. Disconnect ECM harness connector.
3. Check harness continuity between APP sensor terminals 1 and ECM terminal 84, APP sensor terminal 3 and ECM terminal 92.
   Refer to Wiring Diagram.

Continuity should exist.

4. Also check harness for short to ground and short to power.

OK or NG

OK >> GO TO 4.
NG >> Repair open circuit or short to ground or short to power in harness or connectors.

4. CHECK APP SENSOR INPUT SIGNAL CIRCUIT FOR OPEN AND SHORT

1. Check harness continuity between ECM terminal 83 and APP sensor terminal 5, ECM terminal 91 and APP sensor terminal 2.
   Refer to Wiring Diagram.

Continuity should exist.

2. Also check harness for short to ground and short to power.

OK or NG

OK >> GO TO 5.
NG >> Repair open circuit or short to ground or short to power in harness or connectors.

5. CHECK APP SENSOR

Refer to EC-261, "Component Inspection".

OK or NG

OK >> GO TO 6.
NG >> Replace accelerator pedal assembly.

6. CHECK INTERMITTENT INCIDENT

Refer to EC-70.

>> **INSPECTION END**

Component Inspection

INFOID:0000000003759765

ACCELERATOR PEDAL POSITION SENSOR

1. Reconnect all harness connectors disconnected.
2. Turn ignition switch ON.
3. Check voltage between ECM harness connector terminal as follows.

ECM			Condition		Voltage
+		–			
Connector	Terminal	Terminal			
M33	83 (APP sensor 1 signal)	84 (Sensor ground)	Accelerator pedal	Fully released	0.5 - 1.0 V
				Fully depressed	3.7 - 4.7 V
	91 (APP sensor 2 signal)	92 (Sensor ground)	Accelerator pedal	Fully released	0.15 - 0.6 V
				Fully depressed	1.85 - 2.4 V

4. If NG, replace accelerator pedal assembly.

Removal and Installation

INFOID:0000000003759766

ACCELERATOR PEDAL

Refer to “ACCELERATOR CONTROL SYSTEM” in FE section.

DTC P2146, P2149 FUEL INJECTOR POWER SUPPLY

Component Description

INFOID:0000000003759767

The fuel injector is a small, precise solenoid valve. When the ECM supplies a ground to the fuel injector circuit, the coil in the fuel injector is energized. The energized coil pulls the needle valve back and allows fuel to flow through the fuel injector into the cylinder. The amount of fuel injected depends upon the injection pulse duration. Pulse duration is the length of time the fuel injector remains open. The ECM controls the injection pulse duration based on engine fuel needs.

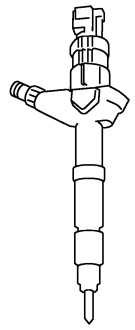

CONSULT-III Reference Value in Data Monitor Mode

INFOID:0000000003759768

Specification data are reference values.

MONITOR ITEM	CONDITION		SPECIFICATION
MAIN INJ WID	• Engine: After warming up • Shift lever: Neutral position • Idle speed	No load	0.50 - 0.70 msec
		Blower fan switch: ON	0.50 - 0.80 msec

On Board Diagnosis Logic

INFOID:0000000003759769

DTC No.	Trouble diagnosis name	DTC detecting condition	Possible cause
P2146 2146	No. 1 and 4 cylinder fuel injector power supply circuit open	An improper voltage signal is sent to ECM through No. 1 and 3 cylinder fuel injector.	• Harness or connectors (The fuel injector circuit is open.)
P2149 2149	No. 2 and 3 cylinder fuel injector power supply circuit open	An improper voltage signal is sent to ECM through No. 2 and 4 cylinder fuel injector.	

DTC Confirmation Procedure

INFOID:0000000003759770

NOTE:
If DTC Confirmation Procedure has been previously conducted, always turn ignition switch OFF and wait at least 10 seconds before conducting the next test.

TESTING CONDITION
Before performing the following procedure, confirm the ambient temperature is more than -20°C (-4°F).

1. Start engine and let it idle for at least 5 seconds.
2. Check 1st trip DTC.
3. If 1st trip DTC is detected, go to EC-265, "Diagnosis Procedure".

Wiring Diagram

INFOID:0000000003759771

EC-INJ/PW-01

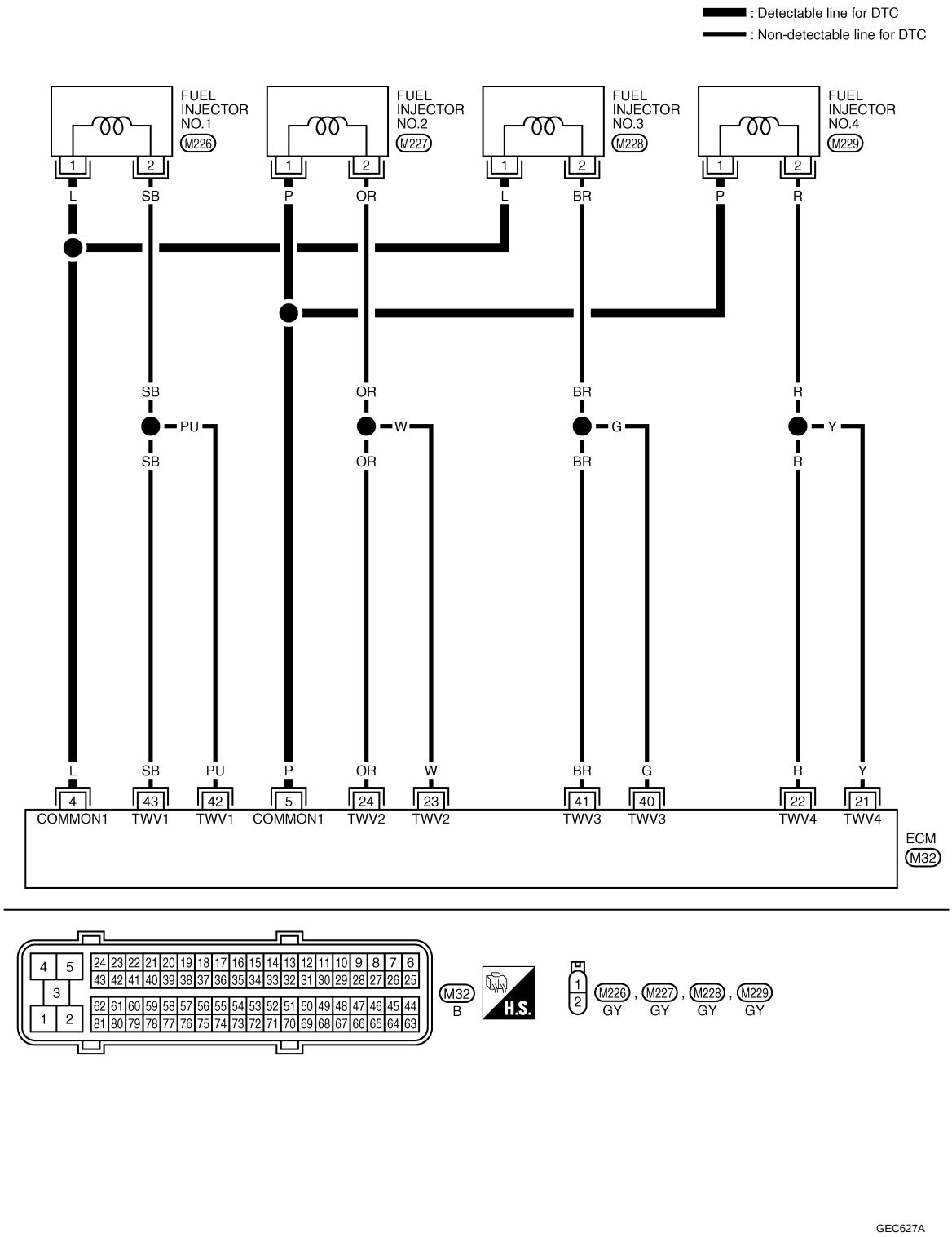

GEC627A

Specification data are reference values and are measured between each terminal and ground.
Pulse signal is measured by CONSULT-III.

TERMINAL NO. (Wire color)		Description	Condition	Value (Approx.)
+	–	Signal name		
4 (L)	114 (B)	Fuel injector power supply (For cylinder No. 1 and 3)	**[Engine is running]** • **Warm-up condition** • Idle speed **NOTE:** The pulse cycle changes depending on rpm at idle	Approximately 7.5 V ★ 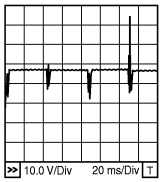 MBIB1295E
5 (P)		Fuel injector power supply (For cylinder No. 2 and 4)	**[Engine is running]** • **Warm-up condition** • Engine speed: 2,000 rpm	Approximately 8.0 V ★ 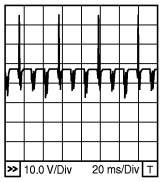 MBIB1296E
21 (Y)	114 (B)	Fuel injector No. 4	**[Engine is running]** • **Warm-up condition** • Idle speed **NOTE:** The pulse cycle changes depending on rpm at idle	Approximately 7.5 V ★ 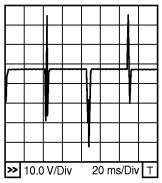 MBIB1297E
22 (R)		Fuel injector No. 4		
23 (W)		Fuel injector No. 2	**[Engine is running]** • **Warm-up condition** • Engine speed: 2,000 rpm	Approximately 8.0 V ★ 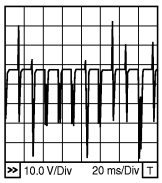 MBIB1298E
24 (OR)		Fuel injector No. 2		
40 (G)	114 (B)	Fuel injector No. 3	**[Engine is running]** • **Warm-up condition** • Idle speed **NOTE:** The pulse cycle changes depending on rpm at idle	Approximately 7.5 V ★ 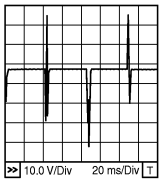 MBIB1297E
41 (BR)		Fuel injector No. 3		
42 (PU)		Fuel injector No. 1	**[Engine is running]** • **Warm-up condition** • Engine speed: 2,000 rpm	Approximately 8.0 V ★ 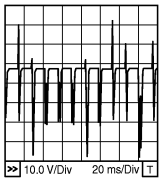 MBIB1298E
43 (SB)		Fuel injector No. 1		

★: Average voltage for pulse signal (Actual pulse signal can be confirmed by oscilloscope.)

Diagnosis Procedure

INFOID:0000000003759773

1. CHECK FUEL INJECTOR POWER SUPPLY CIRCUIT FOR OPEN

1. Turn ignition switch OFF.
2. Disconnect fuel injector harness connector.
3. Disconnect ECM harness connector.
4. Check harness continuity between the following terminals corresponding to the malfunctioning cylinder.
   Refer to Wiring Diagram.

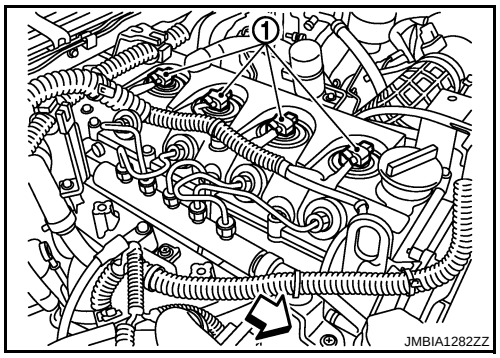

Terminal		Cylinder
ECM	Fuel injector	
4	1	No.1
5	1	No.2
4	1	No.3
5	1	No.4

Continuity should exist.

OK or NG

OK >> GO TO 2.
NG >> Repair open circuit in harness or connectors.

2. CHECK INTERMITTENT INCIDENT

Refer to EC-70.

>> **INSPECTION END**

DTC P2147, P2148 FUEL INJECTOR CIRCUIT

Component Description

INFOID:0000000003759774

The fuel injector is a small, precise solenoid valve. When the ECM supplies a ground to the fuel injector circuit, the coil in the fuel injector is energized. The energized coil pulls the needle valve back and allows fuel to flow through the fuel injector into the cylinder. The amount of fuel injected depends upon the injection pulse duration. Pulse duration is the length of time the fuel injector remains open. The ECM controls the injection pulse duration based on engine fuel needs.

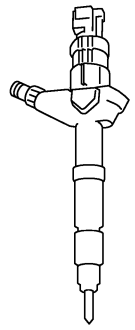

PBIB0465E

CONSULT-III Reference Value in Data Monitor Mode

INFOID:0000000003759775

Specification data are reference values.

MONITOR ITEM	CONDITION		SPECIFICATION
MAIN INJ WID	• Engine: After warming up • Shift lever: Neutral • Idle speed	No load	0.50 - 0.70 msec
		Blower fan switch: ON	0.50 - 0.80 msec

On Board Diagnosis Logic

INFOID:0000000003759776

DTC No.	Trouble diagnosis name	DTC detecting condition	Possible cause
P2147 2147	Fuel injector circuit low input	ECM detects the fuel injector circuit is shorted to ground.	• Harness or connectors (The fuel injector circuit is shorted.)
P2148 2148	Fuel injector circuit high input	ECM detects the fuel injector circuit is shorted to power.	

DTC Confirmation Procedure

INFOID:0000000003759777

NOTE:
If DTC Confirmation Procedure has been previously conducted, always turn ignition switch OFF and wait at least 10 seconds before conducting the next test.

1. Start engine and let it idle for at least 5 seconds.
2. Check 1st trip DTC.
3. If 1st trip DTC is detected, go to EC-269, "Diagnosis Procedure".

Wiring Diagram

INFOID:0000000003759778

EC-INJECT-01

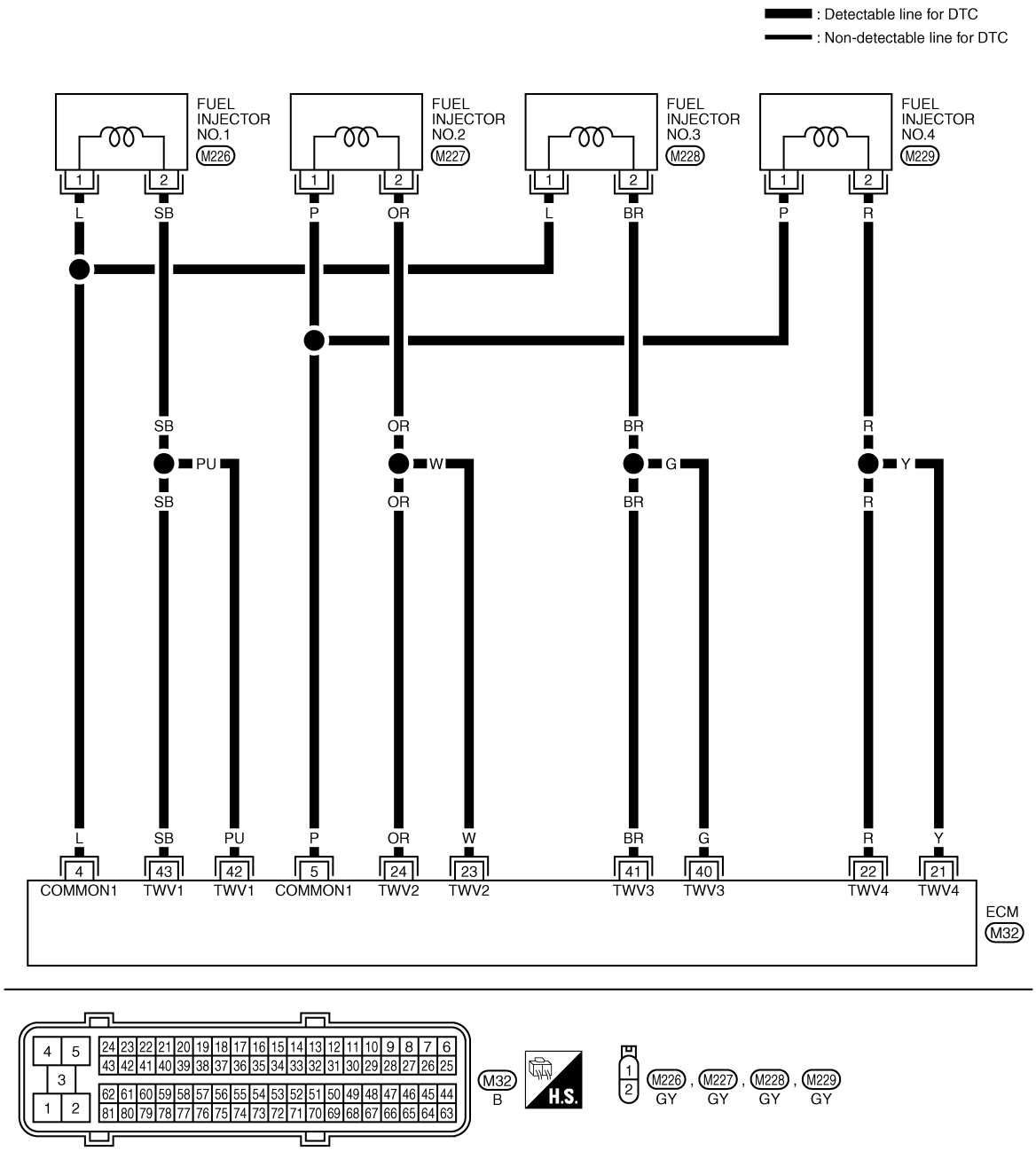

GEC610A

Specification data are reference values and are measured between each terminal and ground.
Pulse signal is measured by CONSULT-III.

TERMINAL NO. (Wire color)		Description	Condition	Value (Approx.)
+	–	Signal name		
4 (L)	114 (B)	Fuel injector power supply (For cylinder No. 1 and 3)	**[Engine is running]** • **Warm-up condition** • Idle speed **NOTE:** The pulse cycle changes depending on rpm at idle	Approximately 7.5 V ★ 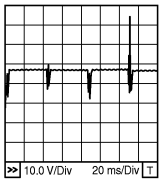 MBIB1295E
5 (P)		Fuel injector power supply (For cylinder No. 2 and 4)	**[Engine is running]** • **Warm-up condition** • Engine speed: 2,000 rpm	Approximately 8.0 V ★ 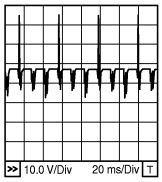 MBIB1296E
21 (Y)	114 (B)	Fuel injector No. 4	**[Engine is running]** • **Warm-up condition** • Idle speed **NOTE:** The pulse cycle changes depending on rpm at idle	Approximately 7.5 V ★ 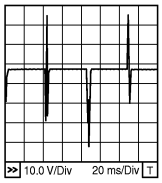 MBIB1297E
22 (R)		Fuel injector No. 4		
23 (W)		Fuel injector No. 2	**[Engine is running]** • **Warm-up condition** • Engine speed: 2,000 rpm	Approximately 8.0 V ★ 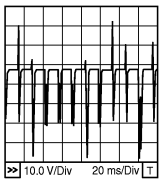 MBIB1298E
24 (OR)		Fuel injector No. 2		
40 (G)	114 (B)	Fuel injector No. 3	**[Engine is running]** • **Warm-up condition** • Idle speed **NOTE:** The pulse cycle changes depending on rpm at idle	Approximately 7.5 V ★ 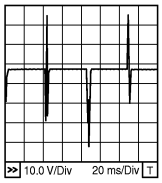 MBIB1297E
41 (BR)		Fuel injector No. 3		
42 (PU)		Fuel injector No. 1	**[Engine is running]** • **Warm-up condition** • Engine speed: 2,000 rpm	Approximately 8.0 V ★ 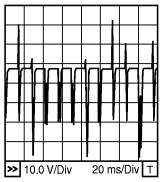 MBIB1298E
43 (SB)		Fuel injector No. 1		

★: Average voltage for pulse signal (Actual pulse signal can be confirmed by oscilloscope.)

Diagnosis Procedure

INFOID:0000000003759780

1. CHECK ECM OUTPUT SIGNAL CIRCUIT FOR OPEN OR SHORT

1. Disconnect fuel injector (1) harness connector.

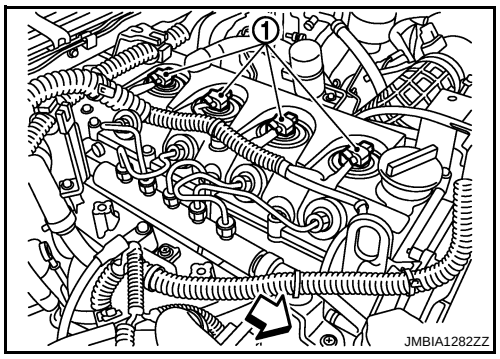

⇦ : Vehicle front

2. Disconnect ECM harness connector.
3. Check harness continuity between the following terminals corresponding to the malfunctioning cylinder.
   Refer to Wiring Diagram.

Cylinder	Terminal		Continuity
	Fuel injector	ECM	
No.1	1	42, 43	Should not exist
		4	Should exist
	2	42, 43	Should exist
		4	Should not exist
No.2	1	23, 24	Should not exist
		5	Should exist
	2	23, 24	Should exist
		5	Should not exist
No.3	1	40, 41	Should not exist
		4	Should exist
	2	40, 41	Should exist
		4	Should not exist
No.4	1	21, 22	Should not exist
		5	Should exist
	2	21, 22	Should exist
		5	Should not exist

4. Also check harness for short to ground and short to power.

OK or NG

OK >> GO TO 2.
NG >> Repair open circuit or short to ground or short to power in harness or connectors.

2. CHECK FUEL INJECTOR

Refer to EC-270, "Removal and Installation".

OK or NG

OK >> GO TO 4.
NG >> GO TO 3.

3. REPLACE FUEL INJECTOR

1. Replace fuel injector of malfunctioning cylinder.
2. Perform Injector Adjustment Value Registration. Refer to EC-22, "Injector Adjustment Value Registration".

>> **INSPECTION END**

4. CHECK INTERMITTENT INCIDENT

Refer to EC-70.

>> **INSPECTION END**

Component Inspection

INFOID:0000000003759781

FUEL INJECTOR

1. Disconnect fuel injector harness connector.
2. Check resistance between terminals as shown in the figure.

Resistance: 0.2 - 0.8 Ω [at 10 - 60°C (50 - 140°F)]

3. If NG, replace fuel injector.

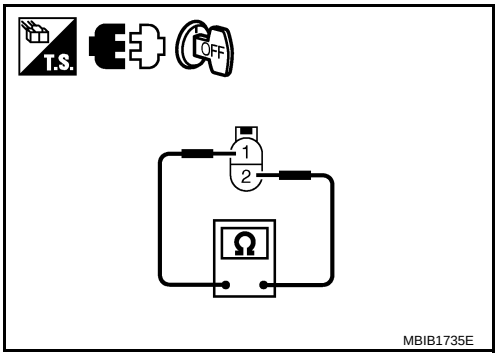

Removal and Installation

INFOID:0000000003759782

FUEL INJECTOR

Refer to EM-8.

DTC P2228, P2229 BARO SENSOR

Description

INFOID:0000000003759783

The barometric pressure sensor is built into ECM. The sensor detects ambient barometric pressure and sends the voltage signal to the microcomputer.

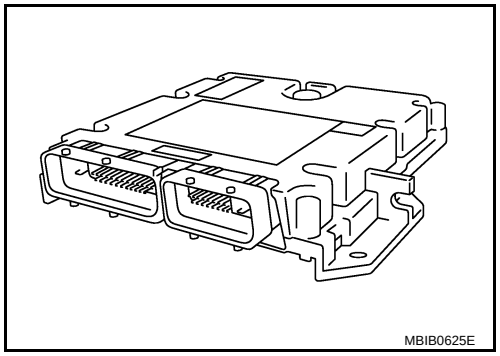

On Board Diagnosis Logic

INFOID:0000000003759784

DTC No.	Trouble diagnosis name	DTC detecting condition	Possible cause
P2228 2228	Barometric pressure sensor circuit low input	An excessively low voltage from the barometric pressure sensor (built-into ECM) is sent to ECM.	• ECM
P2229 2229	Barometric pressure sensor circuit high input	An excessively high voltage from the barometric pressure sensor (built-into ECM) is sent to ECM.	

DTC Confirmation Procedure

INFOID:0000000003759785

NOTE:
If DTC Confirmation Procedure has been previously conducted, always turn ignition switch OFF and wait at least 10 seconds before conducting the next test.

1. Turn ignition switch ON.
2. Wait at least 5 seconds.
3. Check 1st trip DTC.
4. If 1st trip DTC is detected, go to EC-271, "Diagnosis Procedure".

Diagnosis Procedure

INFOID:0000000003759786

1. INSPECTION START

With CONSULT-III

1. Turn ignition switch ON.
2. Select “SELF DIAG RESULTS” mode with CONSULT-III.
3. Touch “ERASE”.
4. Perform EC-271, "DTC Confirmation Procedure", again.
5. Is 1st trip DTC P2228 or P2229 displayed again?

With GST

1. Turn ignition switch ON.
2. Select Service $04 with GST.
3. Perform EC-271, "DTC Confirmation Procedure", again.
4. Is 1st trip DTC P2228 or P2229 displayed again?

Yes or No

Yes >> GO TO 2.
No >> **INSPECTION END**

2. REPLACE ECM

1. Replace ECM.
2. Perform initialization of NATS system and registration of all NATS ignition key IDs. Refer to EL-96, "ECM Re-communicating Function".
3. Perform Injector Adjustment Value Registration. Refer to EC-22, "Injector Adjustment Value Registration".

4. Perform Fuel Pump Learning Value Clearing. Refer to EC-23, "Fuel Pump Learning Value Clearing".
5. Perform EGR Volume Control Valve Closed Position Learning Value Clear. Refer to EC-24, "EGR Volume Control Valve Closed Position Learning Value Clear".
6. Perform EGR Volume Control Valve Closed Position Learning. Refer to EC-24, "EGR Volume Control Valve Closed Position Learning".

>> **INSPECTION END**

GLOW CONTROL SYSTEM

Description

INFOID:0000000003759800

SYSTEM DESCRIPTION

Sensor	Input Signal to ECM	ECM Function	Actuator
Crankshaft position sensor	Engine speed	Glow control	Glow lamp Glow relay Glow plugs
Engine coolant temperature sensor	Engine coolant temperature		

When engine coolant temperature is more than approximately 80°C (176°F), the glow relay turns off.
When coolant temperature is lower than approximately 80°C (176°F):

- Ignition switch ON
  After ignition switch has turned to ON, the glow relay turns ON for a certain period of time in relation to engine coolant temperature, allowing current to flow through glow plug.
- Cranking
  The glow relay turns ON, allowing current to flow through glow plug.
- Starting
  After engine has started, current continues to flow through glow plug (after-glow mode) for a certain period in relation to engine coolant temperature.

The glow indicator lamp turns ON for a certain period of time in relation to engine coolant temperature at the time glow relay is turned ON.

COMPONENT DESCRIPTION

Glow Plug

The glow plug is provided with a ceramic heating element to obtain a high-temperature resistance. It glows in response to a signal sent from the ECM, allowing current to flow through the glow plug via the glow relay.

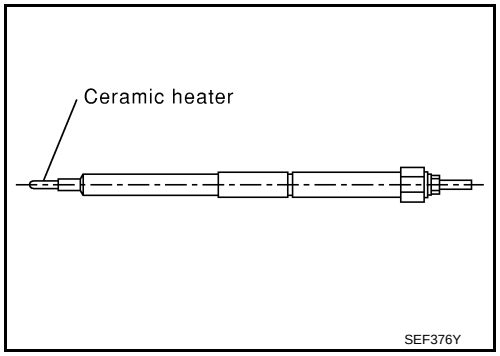

Wiring Diagram

INFOID:0000000003759801

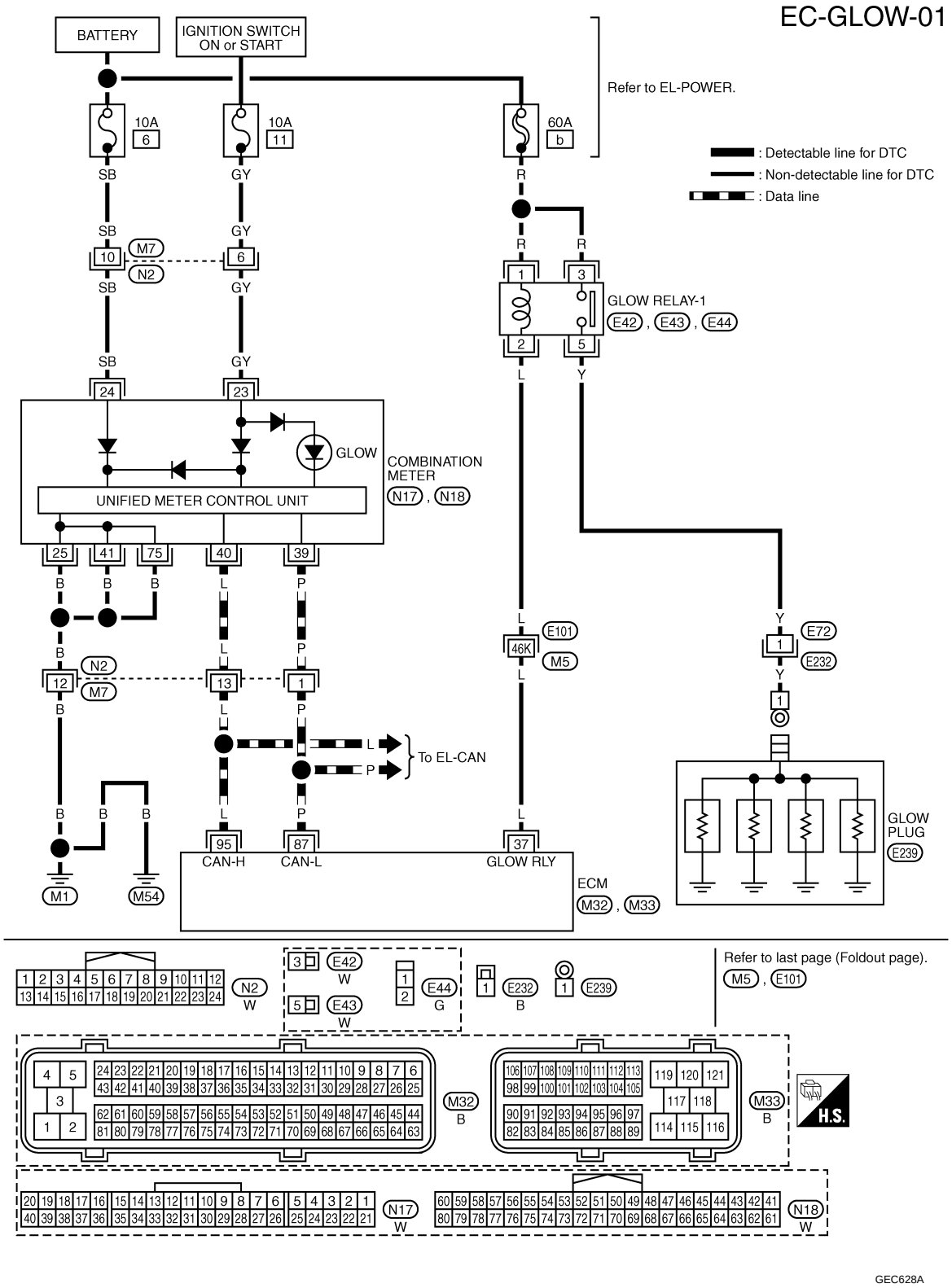

Diagnosis Procedure

INFOID:0000000003759802

1. INSPECTION START

Check fuel level, fuel supplying system, starter motor, etc.

OK or NG

OK >> GO TO 2.
NG >> Correct.

2. CHECK INSTALLATION

Check that glow plug nut (1) and all glow plug connecting plate (2) nuts are installed properly.

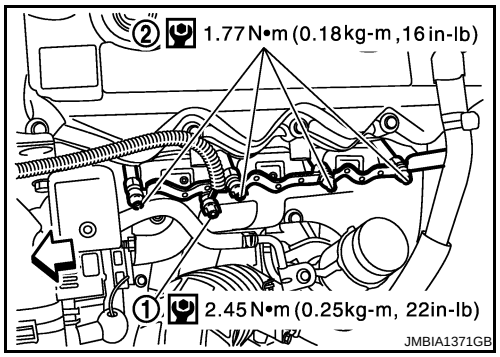

⇦ : Vehicle front

OK or NG

OK >> GO TO 3.
NG >> Install properly.

3. CHECK GLOW INDICATOR LAMP OPERATION

With CONSULT-III

1. Turn ignition switch ON.
2. Select “COOLAN TEMP/S” in “DATA MONITOR” mode with CONSULT-III.
3. Confirm that “COOLAN TEMP/S” indicates below 80°C (176°F). If it indicates above 80°C (176°F), cool down engine.
4. Turn ignition switch OFF, wait at least 5 seconds and then turn ON.
5. Make sure that glow indicator lamp is turned ON for 1.5 seconds or more after turning ignition switch ON, and then glow indicator lamp turned OFF.

Without CONSULT-III

1. Check voltage between ECM harness connector terminals as follows.

ECM		
Connector	+	–
	Terminal	Terminal
M32	51 (Engine coolant temperature sensor)	70 (Sensor ground)

2. Confirm that the voltage indicates above 1.23 V. If it indicates below 1.23 V, cool down engine.
3. Turn ignition switch OFF, wait at least 5 seconds and then turn ON.
4. Make sure that glow indicator lamp is turned ON for 1.5 seconds or more after turning ignition switch ON, and then glow indicator lamp turned OFF.

OK or NG

OK >> GO TO 4.
NG >> GO TO 5.

4. CHECK GLOW CONTROL SYSTEM OVERALL FUNCTION

With CONSULT-III

1. Select “COOLAN TEMP/S” in “DATA MONITOR” mode with CONSULT-III.
2. Confirm that “COOLAN TEMP/S” indicates approximately 25°C (77°F). If NG, cool down engine.
3. Turn ignition switch OFF.
4. Set voltmeter probe between glow plug and engine body.
5. Turn ignition switch ON.

6. Check the voltage between glow plug and engine body under the following conditions.

⇦ : Vehicle front

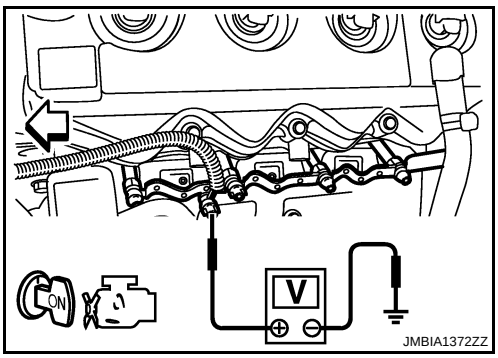

Conditions	Voltage
For 20 seconds after turning ignition switch ON	Battery voltage
More than 20 seconds after turning ignition switch ON	Approx. 0 V

Without CONSULT-III

1. Check voltage between ECM harness connector terminals as follows.

ECM		
Connector	+	–
	Terminal	Terminal
M32	51 (Engine coolant temperature sensor)	70 (Sensor ground)

2. Confirm that the voltage indicates approximately 3.59 V. If NG, cool down engine.
3. Turn ignition switch OFF.
4. Set voltmeter probe between glow plug and engine body.
5. Turn ignition switch ON.

6. Check the voltage between glow plug and engine body under the following conditions.

⇦ : Vehicle front

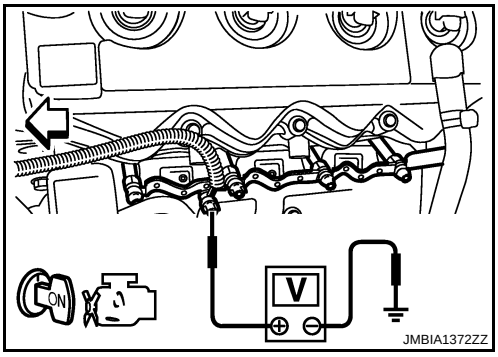

Conditions	Voltage
For 20 seconds after turning ignition switch ON	Battery voltage
More than 20 seconds after turning ignition switch ON	Approx. 0 V

OK or NG

OK >> **INSPECTION END**
NG >> GO TO 7.

5. CHECK DTC

Check that DTC U1000 is not displayed.

Yes or No

Yes >> Perform trouble diagnoses for DTC U1000, refer to EC-83.
No >> GO TO 6.

6. CHECK COMBINATON METER OPERATION

Does combination meter operate normally?

Yes or No

Yes >> GO TO 15.
No >> Check combination meter circuit. Refer to EL-51.

7. CHECK GLOW RELAY POWER SUPPLY CIRCUIT

1. Turn ignition switch OFF.

2. Disconnect glow relay (1) harness connector.

⇦ : Vehicle front

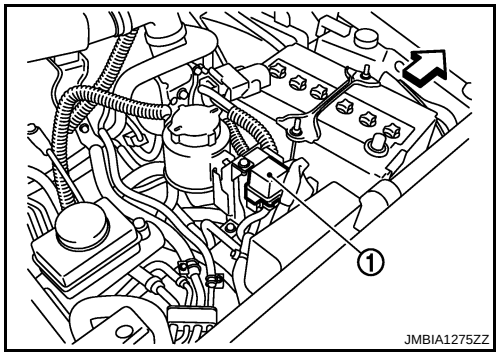

3. Check voltage between glow relay terminals 1, 3 and ground with CONSULT-III or tester.

Voltage: Battery voltage

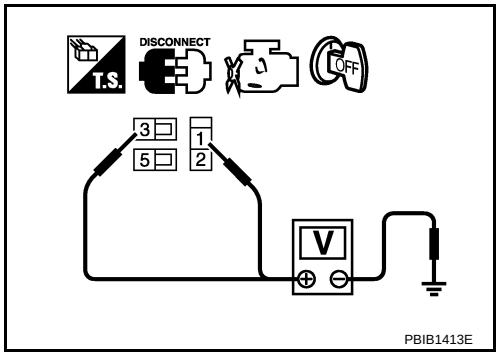

OK or NG

OK >> GO TO 9.
NG >> GO TO 8.

8. DETECT MALFUNCTIONING PART

Check the following.
- 60 A fusible link (letter b)
- Harness for open or short between glow relay and battery

>> Repair harness or connectors.

9. CHECK GLOW RELAY OUTPUT SIGNAL CIRCUIT FOR OPEN AND SHORT

1. Disconnect ECM harness connector.
2. Check harness continuity between ECM terminal 37 and glow relay terminal 2. Refer to Wiring Diagram.

Continuity should exist.

3. Also check harness for short to ground and short to power.

OK or NG

OK >> GO TO 11.
NG >> GO TO 10.

10. DETECT MALFUNCTIONING PART

Check the following.
- Harness connectors E101, M5
- Harness for open or short between glow relay and ECM

>> Repair open circuit or short to ground or short to power in harness or connectors.

11. CHECK HARNESS CONTINUITY BETWEEN GLOW RELAY AND GLOW PLUG FOR OPEN AND SHORT

1. Disconnect glow plug harness connector.
2. Check harness continuity between glow relay terminal 5 and glow plug harness connector. Refer to Wiring Diagram.

Continuity should exist.

3. Also check harness for short to ground and short to power.

OK or NG

OK >> GO TO 13.
NG >> GO TO 12.

12. DETECT MALFUNCTIONING PART

Check the following.
- Harness connectors E72, E232
- Harness for open or short between glow relay and glow plug

>> Repair open circuit or short to ground or short to power in harness or connectors.

13. CHECK GLOW RELAY

Refer to EC-278, "Component Inspection".

OK or NG

OK >> GO TO 14.
NG >> Replace glow relay.

14. CHECK GLOW PLUG

Refer to EC-278, "Component Inspection".

OK or NG

OK >> GO TO 15.
NG >> Replace glow plug.

15. CHECK INTERMITTENT INCIDENT

Refer to EC-70.

>> **INSPECTION END**

Component Inspection

INFOID:0000000003759803

GLOW RELAY

Check continuity between glow relay terminals (3) and (5) under the following conditions.

Conditions	Continuity
12 V direct current supply between terminals (1) and (2)	Yes
No current supply	No

Operation takes less than 1 second.

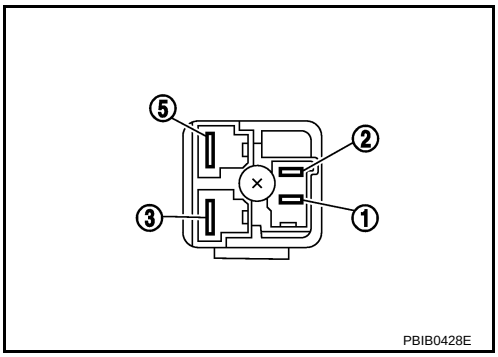

GLOW PLUG

1. Remove glow plug connecting plate (1).

   ⇦ : Vehicle front

   - Glow plug (2)
2. Check glow plug resistance.

   Resistance: Approximately 0.8 Ω [at 25°C (77°F)]

   NOTE:
   - **Do not bump glow plug heating element. If it is bumped, replace glow plug with a new one.**
   - **If glow plug is dropped from a height of 10 cm (3.94 in) or higher, replace with a new one.**

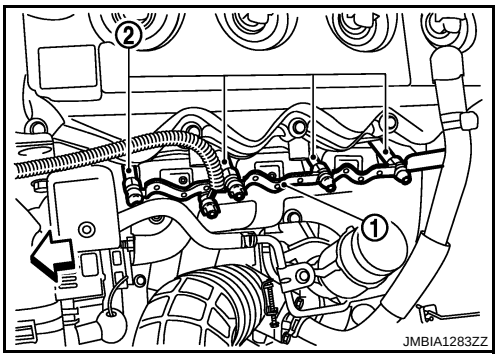

- **If glow plug installation hole is contaminated with carbon, remove it with a reamer or suitable tool.**
- **Hand-tighten glow plug by turning it two or three times, then tighten using a tool to specified torque.**

: 20.1 N-m (2.1 kg-m, 15 ft-lb)

Removal and Installation

INFOID:0000000003759804

GLOW PLUG

Refer to “CYLINDER HEAD” in EM section.

HEAT UP SWITCH

Description

INFOID:0000000003759811

The heat up switch (1) is located on the lower side of the instrument panel. This switch is used to speed up the heater's operation when the engine is cold. When the ECM received the heat up switch ON signal, the ECM increases the engine idle speed to 1,400 rpm to warm up engine quickly.
This system works when all conditions listed below are met.

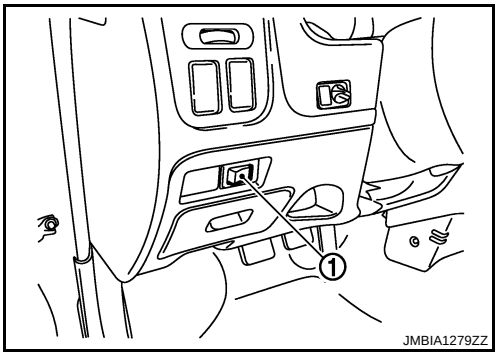

Heat up switch	ON
Shift lever	Neutral
Accelerator pedal	Fully released

CONSULT-III Reference Value in Data Monitor Mode

INFOID:0000000003759812

Specification data are reference values.

MONITOR ITEM	CONDITION		SPECIFICATION
WARM UP SW	• Ignition switch: ON	Heat up switch: OFF	OFF
		Heat up switch: ON	ON

Wiring Diagram

INFOID:0000000003759813

EC-HEATUP-01

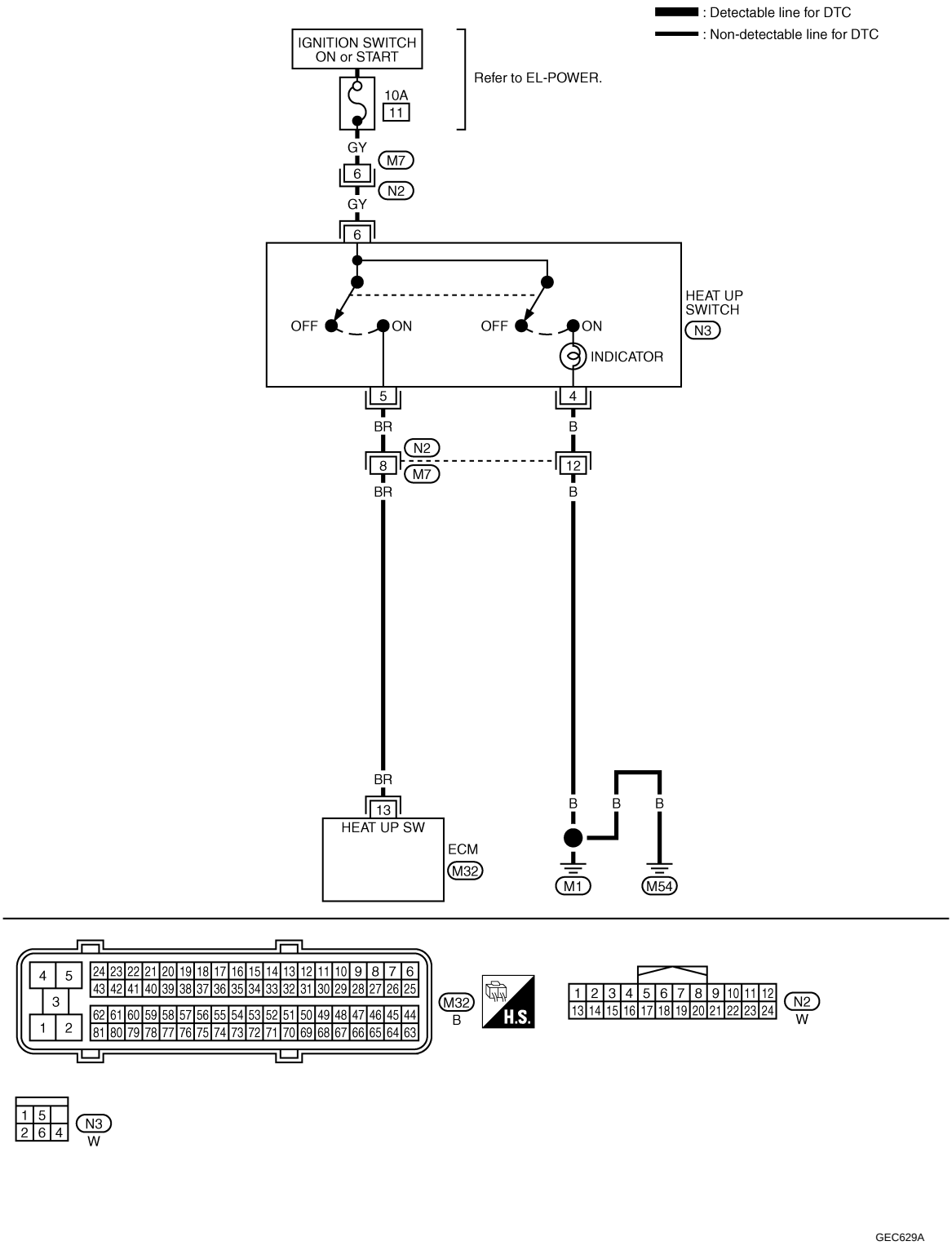

Specification data are reference values and are measured between each terminal and ground.

TERMINAL NO. (Wire color)		Description	Condition	Value (Approx.)
+	–	Signal name		
13 (BR)	114 (B)	Heat up switch	**[Ignition switch ON]** • Heat up switch: OFF	Approximately 0 V
			[Ignition switch ON] • Heat up switch: ON	BATTERY VOLTAGE (11 - 14V)

Diagnosis Procedure

INFOID:0000000003759814

1. CHECK OVERALL FUNCTION-I

With CONSULT-III

1. Turn ignition switch ON.
2. Check “WARM UP SW” in “DATA MONITOR” mode with CONSULT-III under the following conditions.

CONDITION	WARM UP SW
Heat up switch: OFF	OFF
Heat up switch: ON	ON

Without CONSULT-III

1. Turn ignition switch ON.
2. Check voltage between ECM harness connector terminals as follows.

ECM				Condition		Voltage
+		–				
Connector	Terminal	Connector	Terminal			
M32	13	M32	1	Heat up switch	ON	Battery voltage
			2			
			3		OFF	Approx. 0 V
		M33	114			

OK or NG

OK >> GO TO 2.
NG >> GO TO 3.

2. CHECK OVERALL FUNCTION-II

Check indicator in the heat up switch under the following condition.

CONDITION	INDICATION
Heat up switch: OFF	OFF
Heat up switch: ON	ON

OK or NG

OK >> **INSPECTION END**
NG >> GO TO 7.

3. CHECK HEAT UP SWITCH POWER SUPPLY CIRCUIT

1. Turn heat up switch OFF.
2. Turn ignition switch OFF.

3. Disconnect heat up switch (1) harness connector.
4. Turn ignition switch ON.

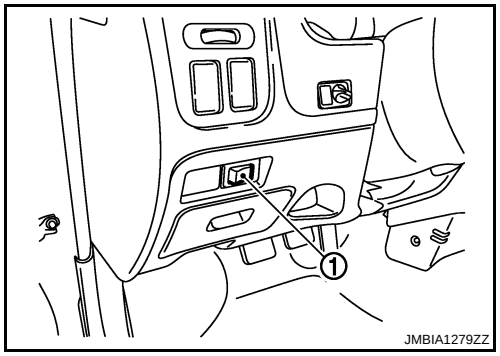

5. Check voltage between heat up switch terminal 6 and ground with CONSULT-III or tester.

Voltage: Battery voltage

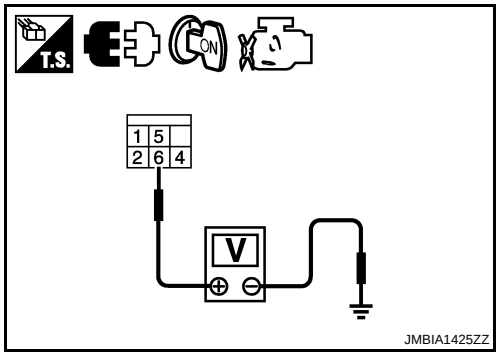

OK or NG

OK >> GO TO 5.
NG >> GO TO 4.

4. DETECT MALFUNCTIONING PART

Check the following.
- 10 A fuse (No. 11)
- Harness connectors M7, N2
- Harness for open or short between heat up switch and fuse

>> Repair open circuit or short to ground or short to power in harness or connectors.

5. CHECK HEAT UP SWITCH INPUT SIGNAL CIRCUIT FOR OPEN OR SHORT

1. Turn ignition switch OFF.
2. Disconnect ECM harness connector.
3. Check harness continuity between ECM terminal 13 and heat up switch terminal 5.
   Refer to Wiring Diagram.

Continuity should exist.

4. Also check harness for short to ground and short to power.

OK or NG

OK >> GO TO 8.
NG >> GO TO 6.

6. DETECT MALFUNCTIONING PART

Check the following.
- Harness connectors N2, M7
- Harness for open or short between ECM and heat up switch

>> Repair open circuit or short to ground or short to power in harness or connectors.

7. CHECK HEAT UP SWITCH INDICATOR GROUND CIRCUIT FOR OPEN AND SHORT

1. Check harness continuity between heat up switch terminal 4 and ground.
   Refer to Wiring Diagram.

Continuity should exist.

2. Also check harness for short to power.

OK or NG

OK >> GO TO 8.
NG >> Repair open circuit or short to power in harness or connectors.

8. CHECK HEAT UP SWITCH

Refer to EC-284, "Component Inspection".

OK or NG

OK >> GO TO 9.
NG >> Replace heat up switch.

9. CHECK INTERMITTENT INCIDENT

Refer to EC-70.

>> **INSPECTION END**

Component Inspection

INFOID:0000000003759815

HEAT UP SWITCH

1. Turn ignition switch OFF.
2. Disconnect heat up switch harness connector.
3. Check continuity between heat up switch terminals 5 and 6 under the following conditions.

CONDITION	CONTINUITY
Heat up switch: OFF	Should not exist
Heat up switch: ON	Should exist

4. If NG, replace heat up switch.
   If OK, go to following step.

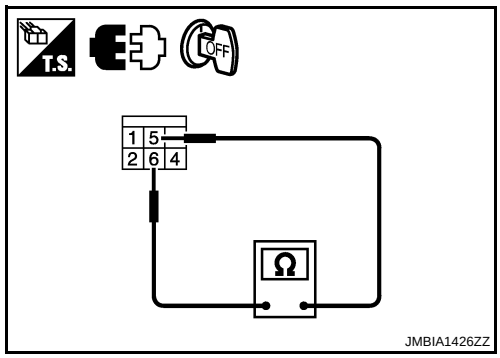

5. Check continuity between heat up switch terminals 4 and 6 under the following conditions.

CONDITION	CONTINUITY
Heat up switch: OFF	Should not exist
Heat up switch: ON	Should exist

6. If NG, replace heat up switch.

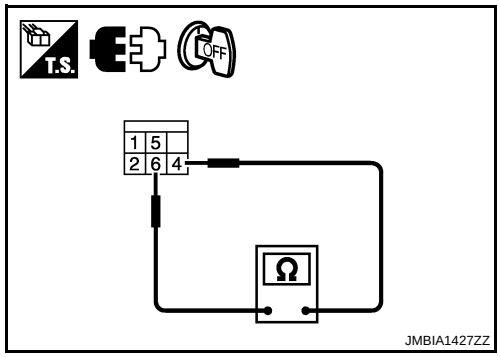

BRAKE SWITCH

Description

INFOID:0000000003759825

STOP LAMP SWITCH

The stop lamp switch (1) is installed to brake pedal bracket. The switch senses brake pedal position and sends an ON-OFF signal to the ECM. The ECM uses the signal to control the fuel injection control system.

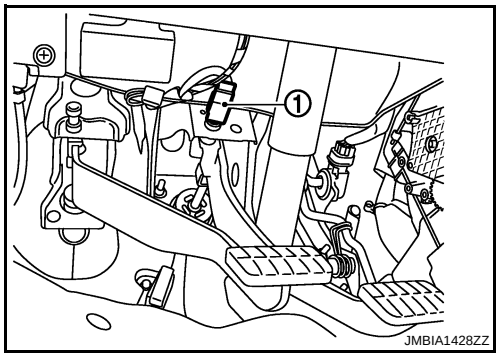

CONSULT-III Reference Value in Data Monitor Mode

INFOID:0000000003759826

Specification data are reference values.

MONITOR ITEM	CONDITION		SPECIFICATION
BRAKE SW (Stop lamp switch)	• Ignition switch: ON	Brake pedal: Fully released	OFF
		Brake pedal: Slightly depressed	ON

Wiring Diagram

INFOID:0000000003759827

EC-BRK/SW-01

: Detectable line for DTC
: Non-detectable line for DTC

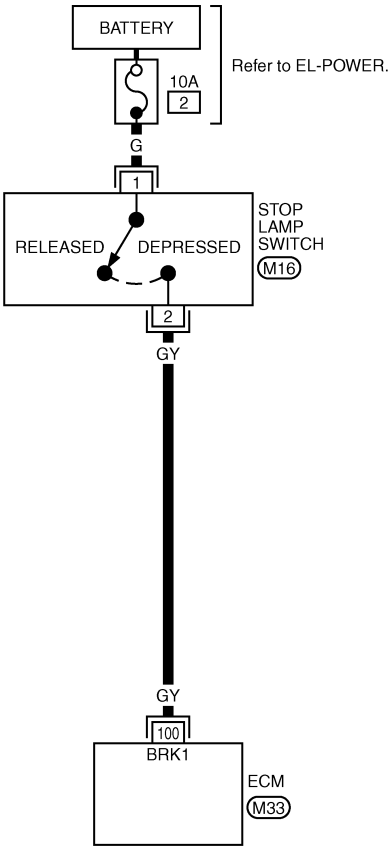

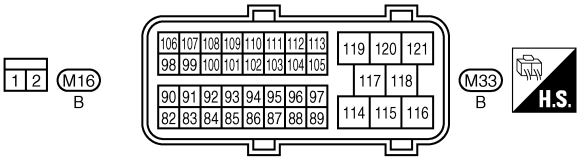

GEC620A

Specification data are reference values and are measured between each terminal and ground.

TERMINAL NO. (Wire color)		Description	Condition	Value (Approx.)
+	–	Signal name		
100 (GY)	114 (B)	Stop lamp switch	**[Ignition switch OFF]** • Brake pedal: Fully released	Approximately 0 V
			[Ignition switch OFF] • Brake pedal: Slightly depressed	BATTERY VOLTAGE (11 - 14 V)

Diagnosis Procedure

INFOID:0000000003759828

1. CHECK OVERALL FUNCTION

With CONSULT-III

1. Turn ignition switch ON.
2. Select “BRAKE SW” in “DATA MONITOR” mode with CONSULT-III.
3. Check “BRAKE SW” indication under the following conditions.

CONDITION	INDICATION
Brake pedal: Fully released	OFF
Brake pedal: Slightly depressed	ON

Without CONSULT-III

Check voltage between ECM harness connector terminals as follows.

+		–		Condition		Voltage
Connector	Terminal	Connector	Terminal			
M33	100	M32	1	Brake pedal	Slightly depressed	Battery voltage
			2			
			3		Fully released	Approx. 0 V
		M33	114			

OK or NG

OK >> **INSPECTION END**
NG >> GO TO 2.

2. CHECK STOP LAMP SWITCH POWER SUPPLY CIRCUIT

1. Turn ignition switch OFF.
2. Disconnect stop lamp switch (2) harness connector.

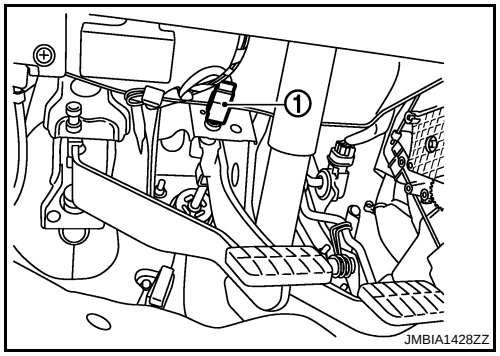

3. Check voltage between stop lamp switch terminal 1 and ground with CONSULT-III or tester.

Voltage: Battery voltage

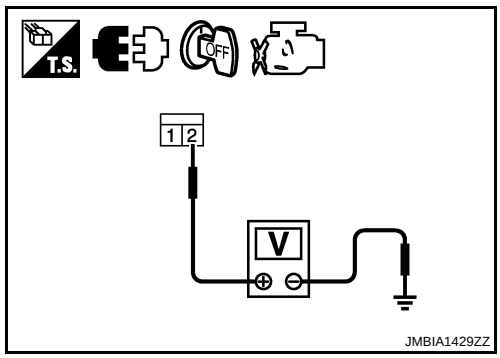

OK or NG

OK >> GO TO 4.
NG >> GO TO 3.

3. DETECT MALFUNCTIONING PART

Check the following.
- 10 A fuse (No. 2)
- Harness for open or short between stop lamp switch and battery

>> Repair open circuit or short to ground or short to power in harness or connectors.

4. CHECK STOP LAMP SWITCH INPUT SIGNAL CIRCUIT FOR OPEN AND SHORT

1. Disconnect ECM harness connector.
2. Check harness continuity between ECM terminal 100 and stop lamp switch terminal 2. Refer to Wiring Diagram.

Continuity should exist.

3. Also check harness for short to ground and short to power.

OK or NG

OK >> GO TO 5.
NG >> Repair open circuit or short to ground or short to power in harness or connectors.

5. CHECK STOP LAMP SWITCH

Refer to EC-288, "Component Inspection".

OK or NG

OK >> GO TO 6.
NG >> Replace stop lamp switch.

6. CHECK INTERMITTENT INCIDENT

Refer to EC-70.

>> **INSPECTION END**

Component Inspection

INFOID:0000000003759829

STOP LAMP SWITCH

1. Disconnect stop lamp switch harness connector.
2. Check continuity between stop lamp switch terminals 1 and 2 under the following conditions.

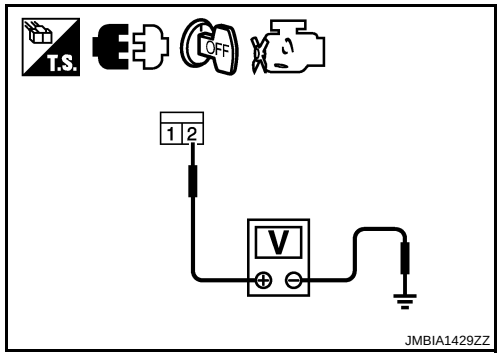

Condition	Continuity
Brake pedal: Fully released	Should not exist
Brake pedal: Slightly depressed	Should exist

If NG, adjust stop lamp switch installation, refer to “BREAKE PEDAL AND BRACKET” in BR section, and perform step 2 again.

PNP SWITCH

Description

INFOID:0000000003759830

When the gear position is in Neutral, park/neutral position is ON. ECM detects the position because the continuity of the line (the “ON” signal) exists.

CONSULT-III Reference Value in Data Monitor Mode

INFOID:0000000003759831

Specification data are reference values.

MONITOR ITEM	CONDITION		SPECIFICATION
P/N POSI SW	• Ignition switch: ON	Shift lever: Neutral position	ON
		Shift lever: Except above	OFF

Wiring Diagram

INFOID:0000000003759832

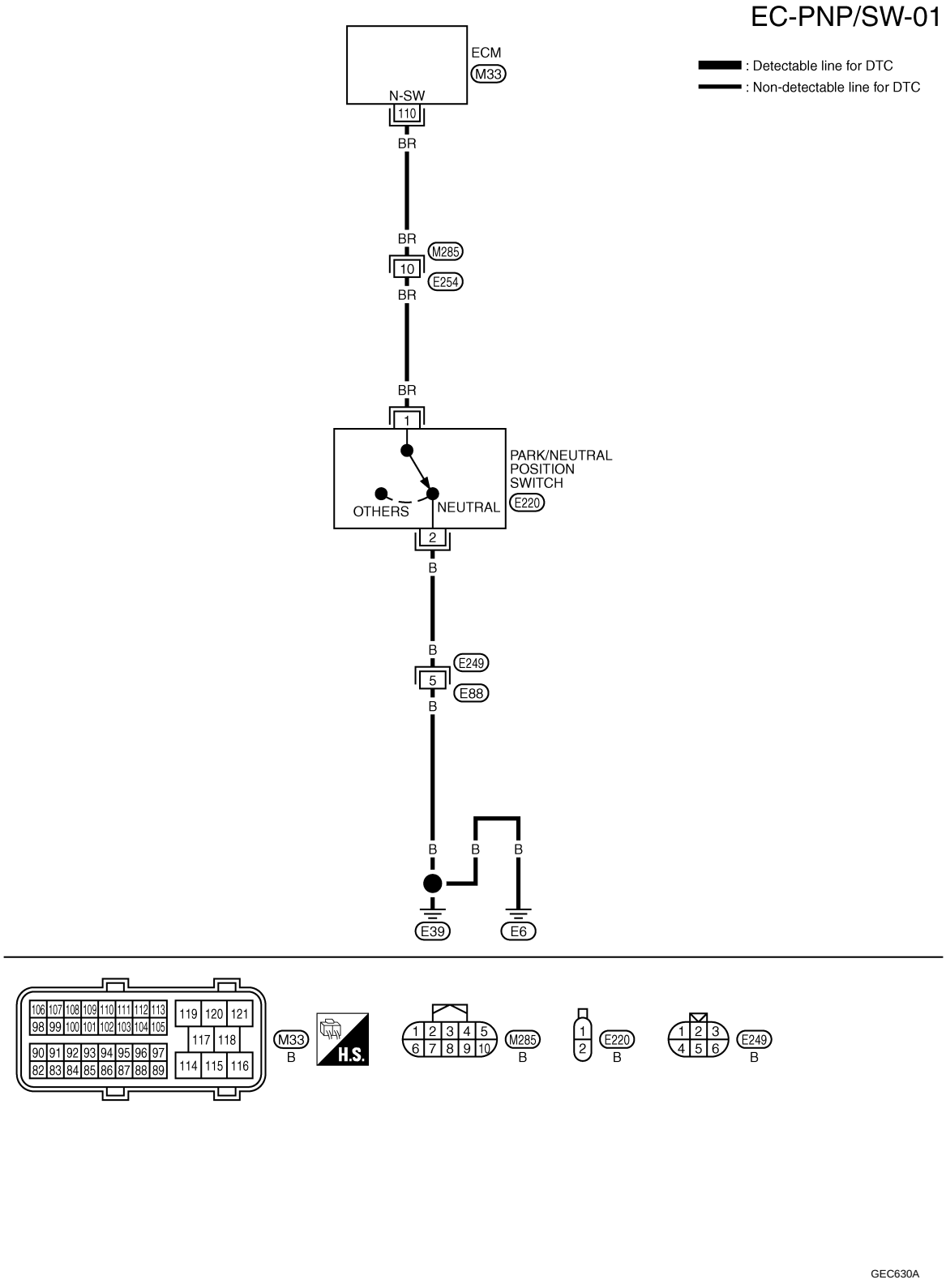

Specification data are reference values and are measured between each terminal and ground.

TERMINAL NO. (Wire color)		Description	Condition	Value (Approx.)
+	–	Signal name		
110 (BR)	114 (B)	Park/neutral position switch	**[Ignition switch ON]** • Shift lever: Neutral	Approximately 0 V
			[Ignition switch ON] • Except the above position	BATTERY VOLTAGE (11 - 14 V)

Diagnosis Procedure

INFOID:0000000003759833

1. CHECK OVERALL FUNCTION

With CONSULT-III

1. Turn ignition switch ON.
2. Select “P/N POSI SW” in “DATA MONITOR” mode with CONSULT-III.
3. Check “P/N POSI SW” signal under the following conditions.

Shift lever position	P/N POSI SW
Neutral position	ON
Except the above position	OFF

Without CONSULT-III

1. Turn ignition switch ON.
2. Check voltage between ECM harness connector terminals as follows.

+		–		Condition		Voltage
Connector	Terminal	Connector	Terminal			
M33	110	M32	1	Shift lever	Neutral	Approx. 0 V
			2			
			3		Except above	BATTERY VOLTAGE
		M33	114			

OK or NG

OK >> **INSPECTION END**
NG >> GO TO 2.

2. CHECK PNP SWITCH GROUND CIRCUIT FOR OPEN AND SHORT

1. Turn ignition switch OFF.
2. Disconnect park/neutral position (PNP) switch (1) harness connector (2).

⇦ : Vehicle front

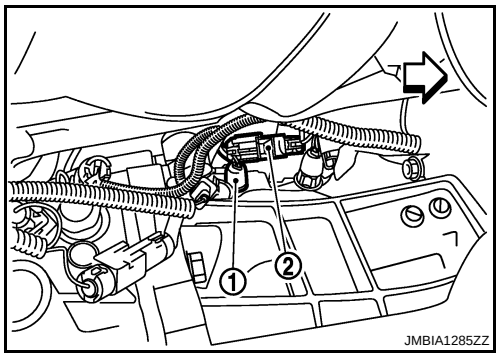

3. Check harness continuity between PNP switch terminal 2 and ground.
   Refer to Wiring Diagram.

   Continuity should exist.

4. Also check harness for short to power.

OK or NG

OK >> GO TO 4.
NG >> GO TO 3.

3. DETECT MALFUNCTIONING PART

Check the following.
- Harness connectors E249, E88
- Harness for open or short between PNP switch and ground

>> Repair open circuit or short to ground or short to power in harness or connectors.

4. CHECK PNP SWITCH INPUT SIGNAL CIRCUIT FOR OPEN AND SHORT

1. Disconnect ECM harness connector.
2. Check harness continuity between ECM terminal 110 and PNP switch terminal 1.
   Refer to Wiring Diagram.

Continuity should exist.

3. Also check harness for short to ground and short to power.

OK or NG

OK >> GO TO 6.
NG >> GO TO 5.

5. DETECT MALFUNCTIONING PART

Check the following.
- Harness connectors M285, E254
- Harness for open or short between PNP switch and ECM

>> Repair open circuit or short to ground or short to power in harness or connectors.

6. CHECK PARK/NEUTRAL POSITION SWITCH

Refer to “ON-VEHICLE SERVICE” in MT section.

OK or NG

OK >> GO TO 7.
NG >> Replace park/neutral position switch.

7. CHECK INTERMITTENT INCIDENT

Refer to EC-70.

>> **INSPECTION END**

START SIGNAL

Wiring Diagram

INFOID:0000000003759834

EC-S/SIG-01

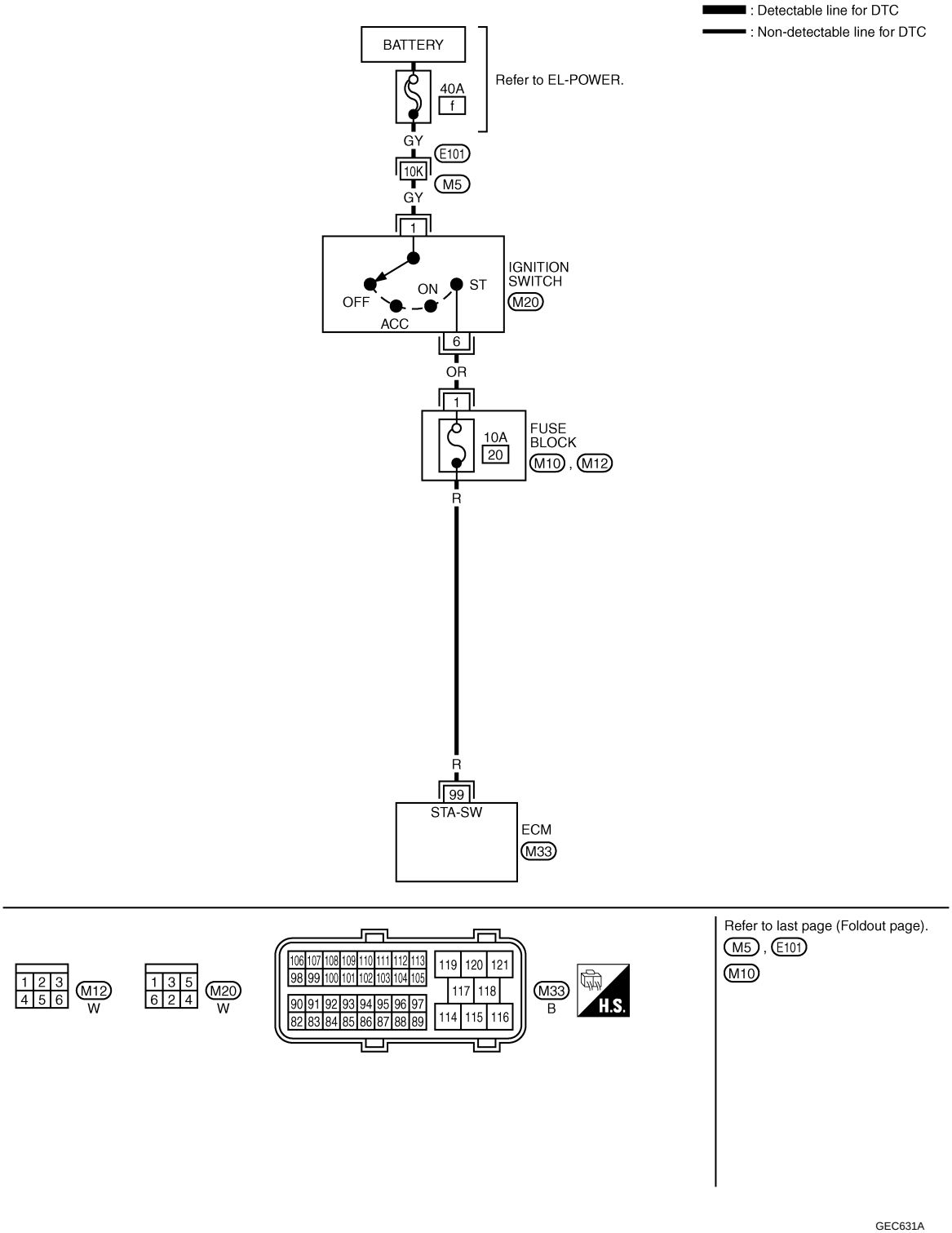

TERMINAL NO. (Wire color)		Description	Condition	Value (Approx.)
+	–	Signal name		
99 (R)	114 (B)	Start signal	**[Ignition switch ON]**	Approximately 0 V
			[Ignition switch START]	BATTERY VOLTAGE (11 - 14 V)

★: Average voltage for pulse signal (Actual pulse signal can be confirmed by oscilloscope.)

Diagnosis Procedure

INFOID:0000000003759835

1. CHECK START SIGNAL OVERALL FUNCTION

With CONSULT-III

1. Turn ignition switch ON.
2. Check “START SIGNAL” in “DATA MONITOR” mode with CONSULT-III under the following conditions.

Condition	START SIGNAL
Ignition switch: ON	OFF
Ignition switch: START	ON

Without CONSULT-III

Check voltage between ECM harness connector terminals as follows.

ECM				Condition		Voltage
+		–				
Connector	Terminal	Connector	Terminal			
M33	99	M32	1	Ignition switch	ON	Approx. 0 V
			2			
			3		START	Battery voltage
		M33	114			

OK or NG

OK >> **INSPECTION END**
NG >> GO TO 2.

2. CHECK START SIGNAL INPUT SIGNAL CIRCUIT

1. Turn ignition switch OFF.
2. Disconnect ECM harness connector and ignition switch harness connector.
3. Check harness continuity between ECM terminal 99 and ignition switch terminal 6.
   Refer to Wiring Diagram.

   Continuity should exist.

4. Also check harness for short to ground and short to power.

OK or NG

OK >> GO TO 4.
NG >> GO TO 3.

3. DETECT MALFUNCTIONING PART

Check the following.

- 10 A fuse (No. 20)
- 40 A fusible link (letter f)
- Harness connectors E101, M5
- Fuse block (J/B) connectors M12
- Ignition switch harness connector M20

- Harness for open or short between ECM and fusible link

>> Repair open circuit or short to ground or short to power in harness or connectors.

4. CHECK INTERMITTENT INCIDENT

Refer to EC-70.

>> **INSPECTION END**

MI & DATA LINK CONNECTORS

Wiring Diagram

INFOID:0000000003759842

EC-MIL/DL-01

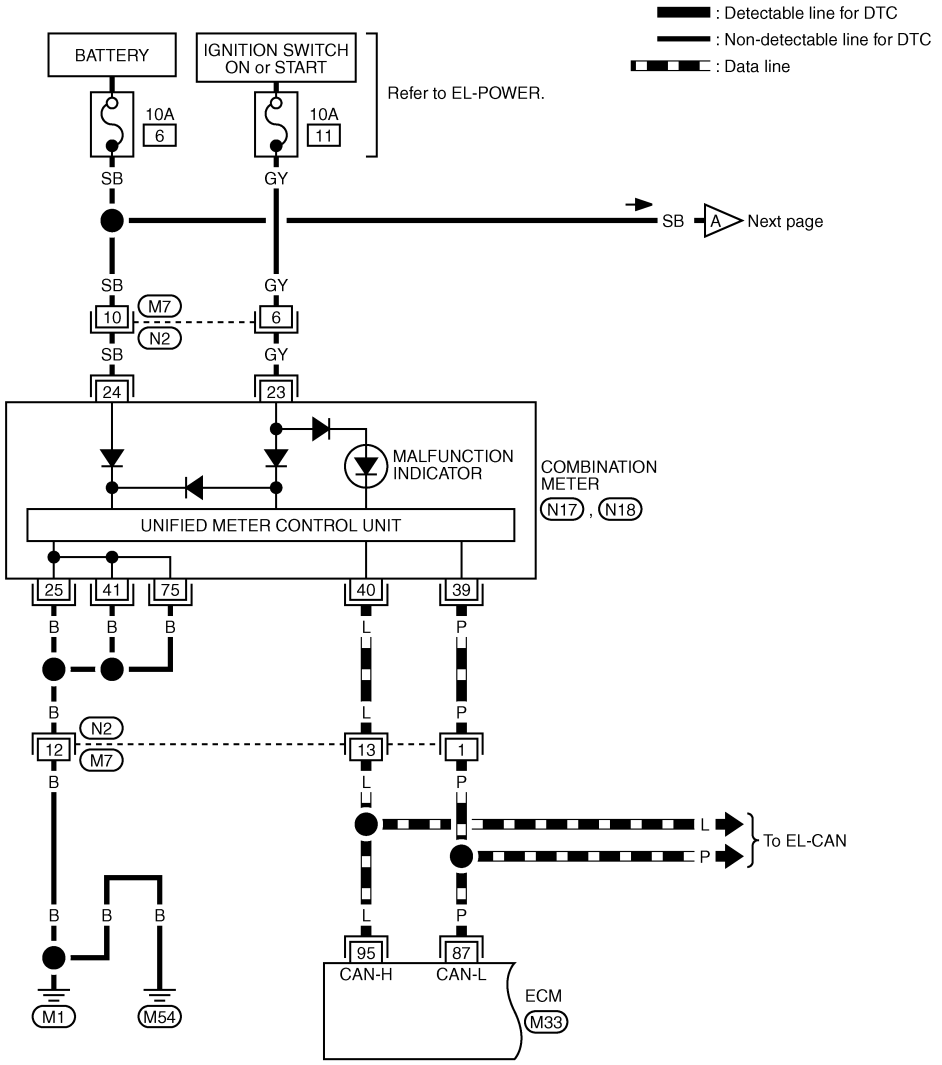

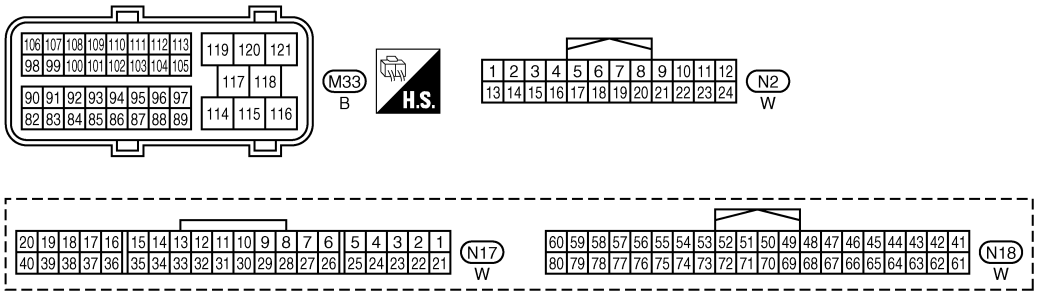

GEC632A

EC-MIL/DL-02

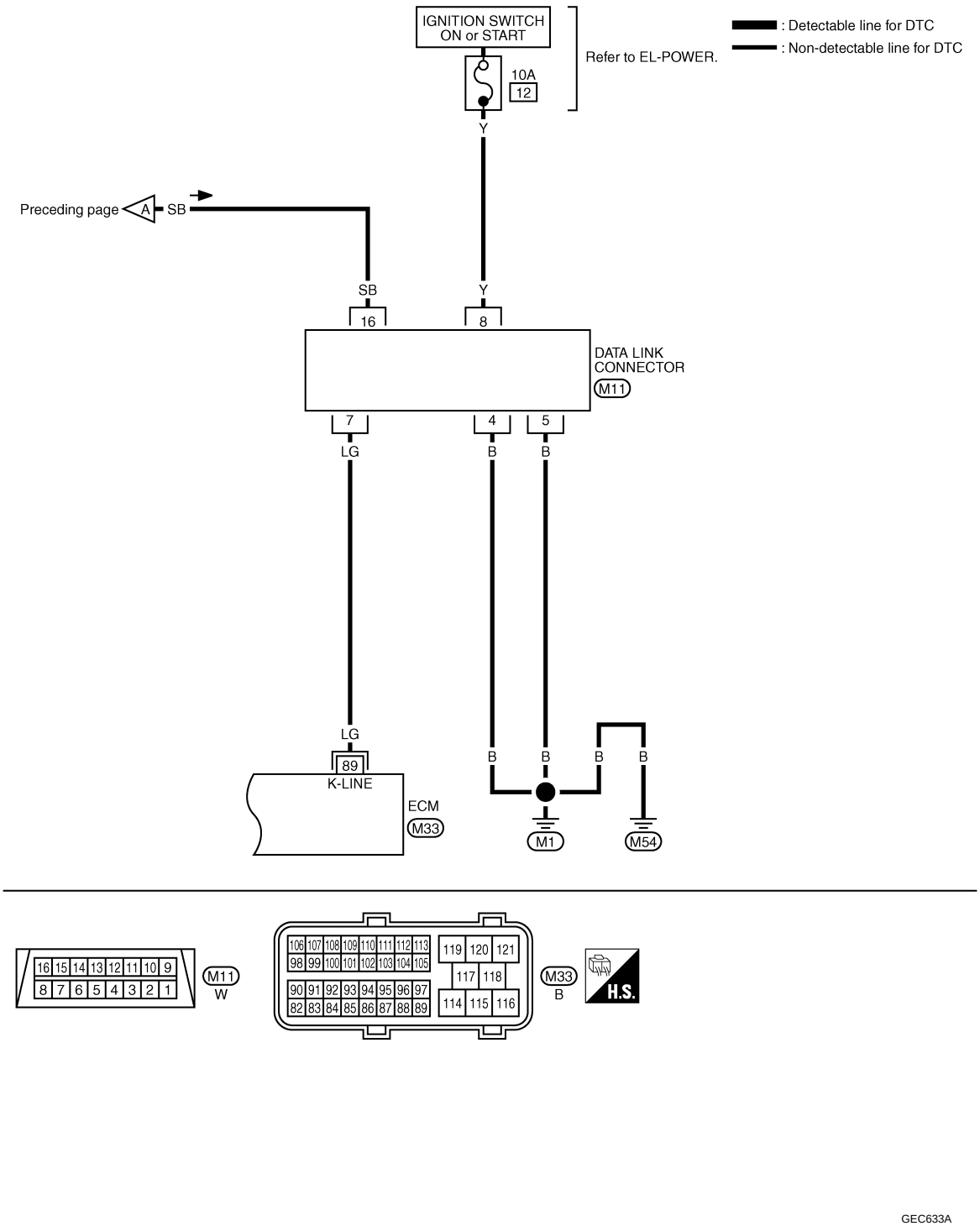
IGNITION SWITCH ON or START
10A
12
Refer to EL-POWER.
: Detectable line for DTC
: Non-detectable line for DTC
Y
Preceding page
A
SB
SB
16
Y
8
DATA LINK CONNECTOR
M11
7
4
5
LG
B
B
LG
89
K-LINE
ECM
M33
B
B
B
B
M1
M54
M11
W
M33
B
H.S.
GEC633A

SERVICE DATA AND SPECIFICATIONS (SDS)

General Specification

INFOID:0000000003759845

Target idle speed	No load* (in Neutral position)	750 ± 25 rpm
Air conditioner: ON	In Neutral position	800 rpm or more
Maximum engine speed		4,900 rpm

*: Under the following conditions:

- Heat up switch: OFF
- Air conditioner switch: OFF
- Electric load: OFF (Lights & heater fan)
- Steering wheel: Kept in straight-ahead position

Mass Air Flow Sensor

INFOID:0000000003759846

Supply voltage	Battery voltage (11 - 14 V)
Ignition switch ON (Engine stopped.)	Approx. 0.4 V (CONSULT-III DATA MONITOR) Approx. 0.7 V (ECM terminal 54 and ground)
Idle (Engine is warmed up to normal operating temperature.)	1.3 - 1.8 V* (CONSULT-III DATA MONITOR) 1.7 - 2.1 V* (ECM terminal 54 and ground)

*: Engine is warmed up to normal operating temperature and running under no load.

Intake Air Temperature Sensor

INFOID:0000000003759847

Temperature [°C (°F)]	Resistance (kΩ)
25 (77)	1.800 - 2.200
80 (176)	0.283 - 0.359

Engine Coolant Temperature Sensor

INFOID:0000000003759848

Temperature [°C (°F)]	Resistance (kΩ)
20 (68)	2.1 - 2.9
50 (122)	0.68 - 1.00
90 (194)	0.236 - 0.260

Fuel Rail Pressure Sensor

INFOID:0000000003759850

Supply voltage	Approximately 5 V
Idle (Engine is warmed up to normal operating temperature.)	1.7 - 2.0 V
2,000 rpm (Engine is warmed up to normal operating temperature.)	2.0 - 2.3 V

Fuel Injector

INFOID:0000000003759851

Resistance [at 10 - 60°C (50 - 140°F)]	0.2 - 0.8 Ω

Crankshaft Position Sensor

INFOID:0000000003759852

Refer to EC-156, "Component Inspection".

Camshaft Position Sensor

INFOID:0000000003759853

Refer to EC-166, "Component Inspection".

Glow Plug

INFOID:0000000003759854

Resistance [at 25°C (77°F)]	Approximately 0.8 Ω

Fuel Pump

INFOID:0000000003759857

Resistance [at 10 - 60°C (50 - 140°F)]	1.5 - 3.0 Ω