SECTION EL
ELECTRICAL SYSTEM

CONTENTS

SERVICE INFORMATION 3

MODIFICATION NOTICE 3
Major Modification Item 3

POWER SUPPLY ROUTING 4
Schematic 4
Wiring Diagram - POWER - 5

BATTERY 12
Battery 12

STARTING SYSTEM 13
Wiring Diagram - START - 13

CHARGING SYSTEM 14
Wiring Diagram - CHARGE - 14

HEADLAMP - CONVENTIONAL TYPE - 15
Wiring Diagram - H/LAMP - 15
Aiming Adjustment 16

HEADLAMP - DAYTIME LIGHT SYSTEM - 21
Schematic 21
Wiring Diagram -DTRL- 22

HEADLAMP AIMING CONTROL 25
Wiring Diagram - H/AIM - 25

FRONT FOG LAMP 27
Wiring Diagram - F/FOG -/LHD Models 27
Wiring Diagram - F/FOG -/RHD Models 28
Aiming Adjustment 28

REAR FOG LAMP 30
Wiring Diagram - R/FOG -/LHD Models without Front Fog Lamp 30
Wiring Diagram - R/FOG -/RHD Models without Front Fog Lamp 32
Wiring Diagram - R/FOG -/LHD Models with Front Fog Lamp 34
Wiring Diagram - R/FOG -/RHD Models with Front Fog Lamp 36

PARKING, LICENSE PLATE AND TAIL LAMPS 38
Wiring Diagram - TAIL/L -/LHD Models 38
Wiring Diagram - TAIL/L -/RHD Models 40

STOP LAMP 42
Wiring Diagram - STOP/L - 42

BACK-UP LAMP 43
Wiring Diagram - BACK/L - 43

TURN SIGNAL AND HAZARD WARNING LAMPS 44
Wiring Diagram - TURN - 44

INTERIOR ROOM LAMP 46
Wiring Diagram - ROOM/L - 46
Wiring Diagram - SPOT LAMP - 47

ILLUMINATION 48
Wiring Diagram - ILL -/LHD Models 48
Wiring Diagram - ILL -/RHD Models 50

COMBINATION METERS 51
System Description 51
Arrangement of Combination Meter 51
Internal Circuit 52
Wiring Diagram - METER - 53
Self-Diagnosis Mode of Combination meter 54
SYMPTOM CHART 55
Power Supply and Ground Circuit Inspection 56
Vehicle Speed Signal Inspection 56
Engine Speed Signal Inspection 57
Engine Coolant Temperature Signal Inspection 58
Fuel Level Sensor Signal Inspection 58
Oil Level Sensor Signal Inspection 59
Electrical Component Inspection 59
Disassembly and Assembly of Combination Meter 60

WARNING LAMPS 61
Schematic 61

Wiring Diagram - WARN - 62

WARNING BUZZER 68
System Description 68
Wiring Diagram - BUZZER - /Seat Belt Reminder... 69
Wiring Diagram - BUZZER - /Light Reminder 70

FRONT WIPER AND WASHER 74
Wiring Diagram - WIPER -/With Intermittent for Floor-shift 74

HEADLAMP WASHER 75
Wiring Diagram - HLC - 75

HORN 76
Wiring Diagram - HORN - 76

CIGARETTE LIGHTER 77
Wiring Diagram - CIGAR - 77

REAR WINDOW DEFOGGER AND MIRROR DEFOGGER 78
Wiring Diagram - DEF - 78

AUDIO 79
Wiring Diagram - AUDIO -/LHD Models for Europe ... 79
Wiring Diagram - AUDIO -/RHD Models 80

POWER DOOR MIRROR 81
Wiring Diagram - MIRROR -/LHD Models 81
Wiring Diagram - MIRROR -/RHD Models 82

HEATED SEAT 83
Wiring Diagram - H/SEAT - 83

POWER WINDOW 85
Schematic/With Interruption Detection Function ... 85
Wiring Diagram - WINDOW -/With Interruption Detection Function 86

POWER DOOR LOCK 90
Schematic 90
Wiring Diagram - D/LOCK - 91

MULTI-REMOTE CONTROL SYSTEM 94
Wiring Diagram - MULTI - 94

NATS (NISSAN ANTI-THEFT SYSTEM) 95
Component Parts and Harness Connector Location 95
System Description 95
System Composition 96
ECM Re-communicating Function 96
Wiring Diagram - NATS - 98
Terminal and Reference Value for BCM 100
CONSULT-III Function 100
Trouble Diagnosis Procedure 101
Symptom Matrix Chart 1 102
Symptom Matrix Chart 2 102
P1610 LOCK MODE 102
P1611 ID DISCORD, IMMU-ECM 103
P1612 CHAIN OF ECM-IMMU 103
P1614 CHAIN OF IMMU-KEY 105
P1615 DIFFERENCE OF KEY 106
P1616 ECM 106
Check Security Indicator Lamp 107
Removal and Installation of NATS Antenna Amp . 107

THEFT WARNING SYSTEM 109
Wiring Diagram - PRWIRE - 109

CAN SYSTEM 110
Abbreviation List 110
CAN Diagnostic Support Monitor 110
CAN System Specification Chart 110
CAN Communication Signal Chart 111
Wiring Diagram - CAN - 112
Interview Sheet 113
CAN System (Type 1) 114
CAN System (Type 2) 115
Component Parts Location 115
Malfunction Area Chart 117
Main Line Between ECM and Combination Meter. 117
Main Line Between BCM and Data Link Connector . 117
ECM Branch Line Circuit 118
BCM Branch Line Circuit 118
Data Link Connector Branch Line Circuit 119
Combination Meter Branch Line Circuit 119
CAN Communication Circuit 120

HARNESS LAYOUT 123
Outline 123
Main Harness 124
Engine Room Harness 132
Engine Harness 136
Instrument Harness 138
Chassis Harness and Tail Harness 139
Room Lamp Harness/LHD Models 140
Room Lamp Harness/RHD Models 141
Front Door Harness (LH Side) 142
Front Door Harness (RH Side) 143
Rear Door Harness 144

SMJ (SUPER MULTIPLE JUNCTION) 145
Terminal Arrangement 145

FUSE AND FUSIBLE LINK 146
Terminal Arrangement 146

CONTROL UNITS 147
Terminal Arrangement 147

SERVICE INFORMATION

MODIFICATION NOTICE

Major Modification Item

INFOID:0000000003508024

- Wiring diagram has been changed.
- Harness layout has been changed.
- Terminal arrangement has been changed.
- CAN communication system has been adopted. (YD25DDTi models)
- Battery specifications has been changed.
- Headlamp aiming procedure has been changed.
- Front fog lamp aiming procedure has been changed.
- Combination meter has been changed.
- Seat belt reminder buzzer has been adopted.
- Light reminder warning buzzer has been adopted.

POWER SUPPLY ROUTING

Schematic

INFOID:0000000003774798

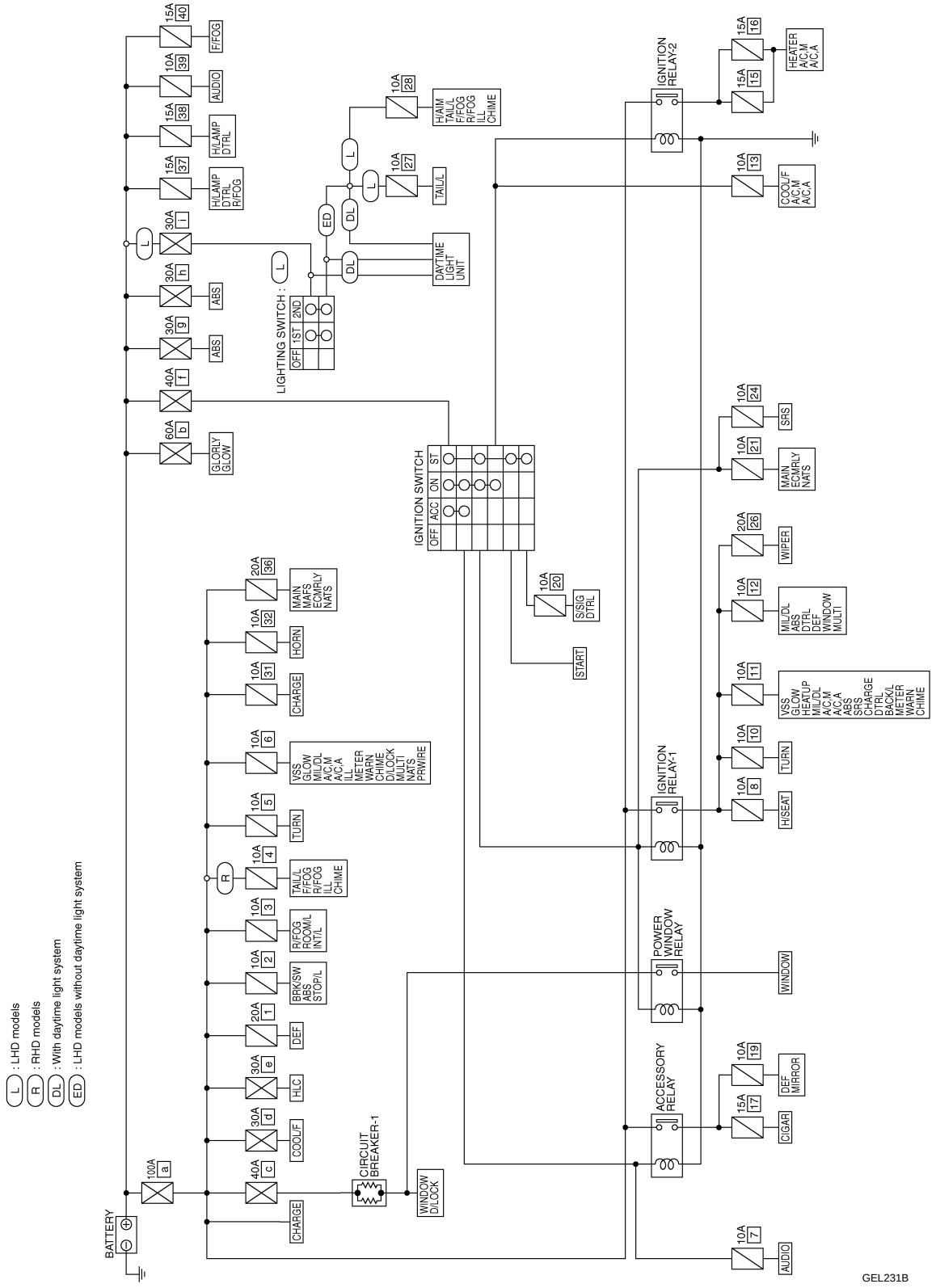

Wiring Diagram - POWER -

INFOID:0000000003774799

BATTERY POWER SUPPLY — IGNITION SWITCH. IN ANY POSITION

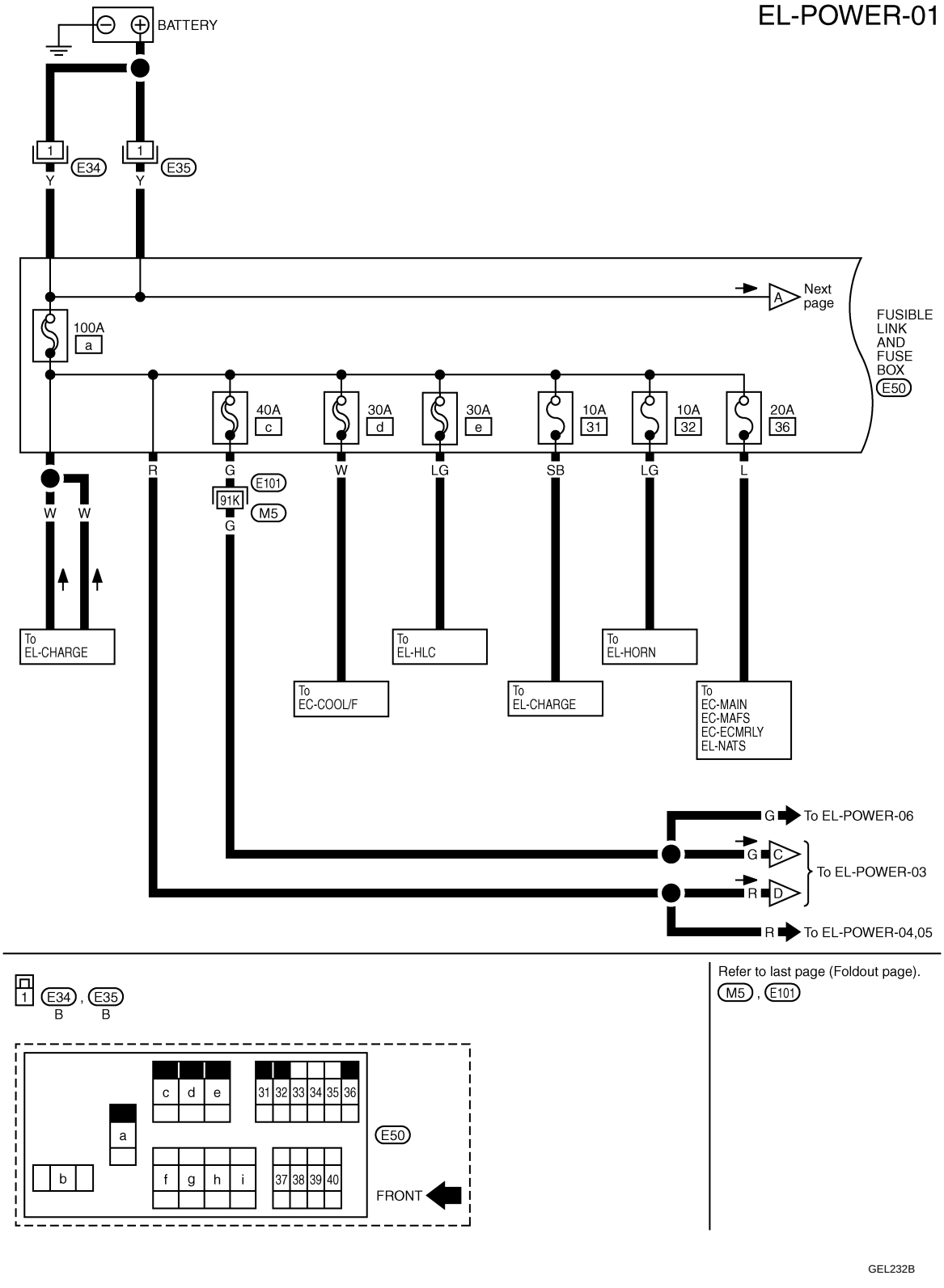

EL-POWER-02

L : LHD models

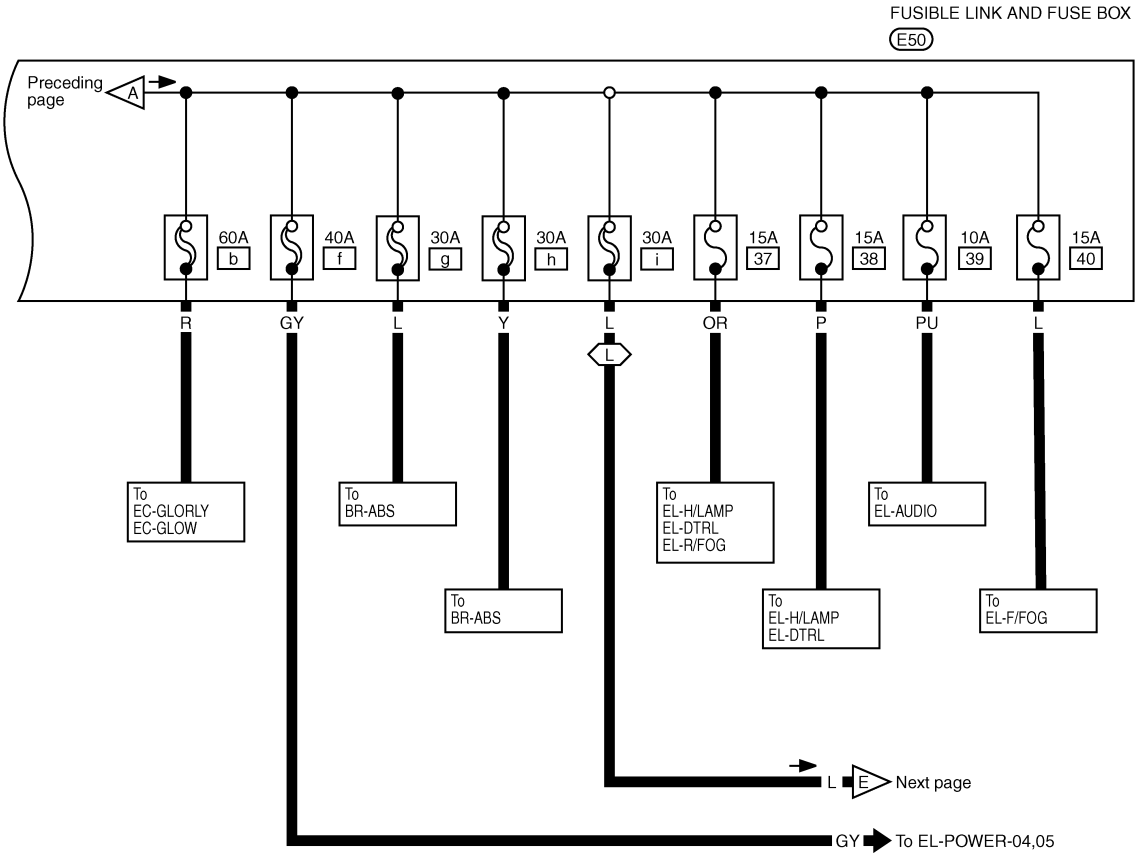

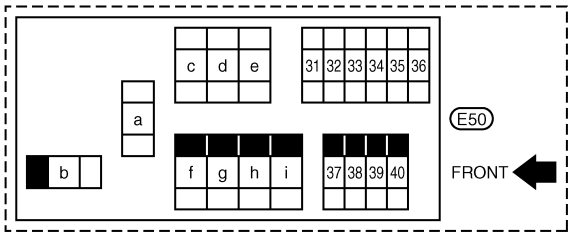

GEL233B

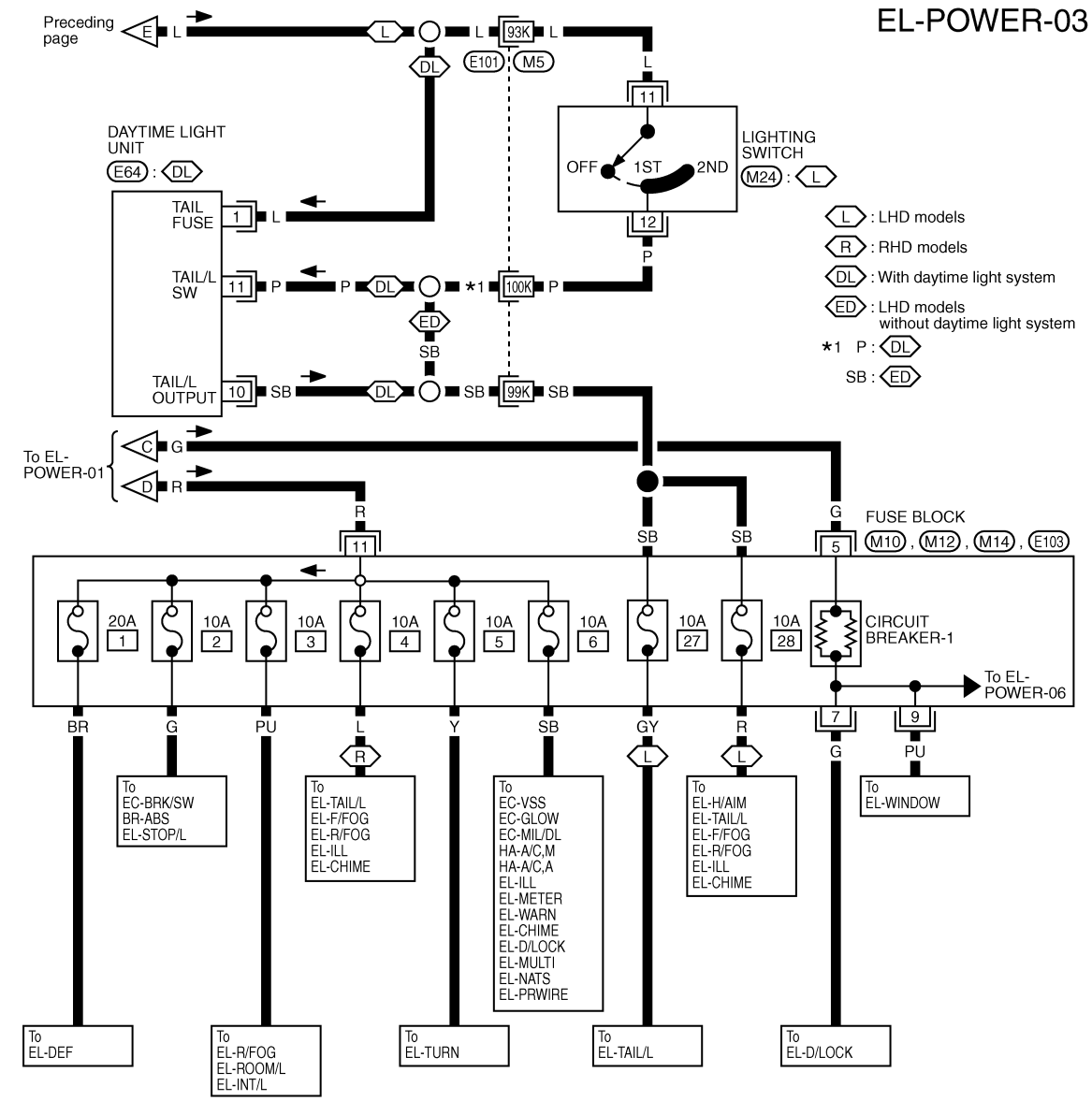
EL-POWER-03
Preceding page
E
L
DL
93K
E101
M5
DAYTIME LIGHT UNIT
E64 : DL
TAIL FUSE
TAIL/L SW
TAIL/L OUTPUT
LIGHTING SWITCH
M24 : L
OFF
1ST
2ND
100K
ED
SB
99K
L : LHD models
R : RHD models
DL : With daytime light system
ED : LHD models without daytime light system
*1 P : DL
SB : ED
To EL-POWER-01
C
D
G
R
FUSE BLOCK
M10 , M12 , M14 , E103
CIRCUIT BREAKER-1
20A
10A
To EL-POWER-06
BR
PU
Y
GY
To EC-BRK/SW BR-ABS EL-STOP/L
To EL-TAIL/L EL-F/FOG EL-R/FOG EL-ILL EL-CHIME
To EC-VSS EC-GLOW EC-MIL/DL HA-A/C,M HA-A/C,A EL-ILL EL-METER EL-WARN EL-CHIME EL-D/LOCK EL-MULTI EL-NATS EL-PRWIRE
To EL-H/AIM EL-TAIL/L EL-F/FOG EL-R/FOG EL-ILL EL-CHIME
To EL-WINDOW
To EL-DEF
To EL-R/FOG EL-ROOM/L EL-INT/L
To EL-TURN
To EL-TAIL/L
To EL-D/LOCK
M10
M12
W
M14
M24
BR
E64
SB
E103
B
UP
Refer to last page (Foldout page).
M5 , E101
GEL234B

ACCESSORY POWER SUPPLY — IGNITION SWITCH. IN “ACC” OR “ON”

EL-POWER-04

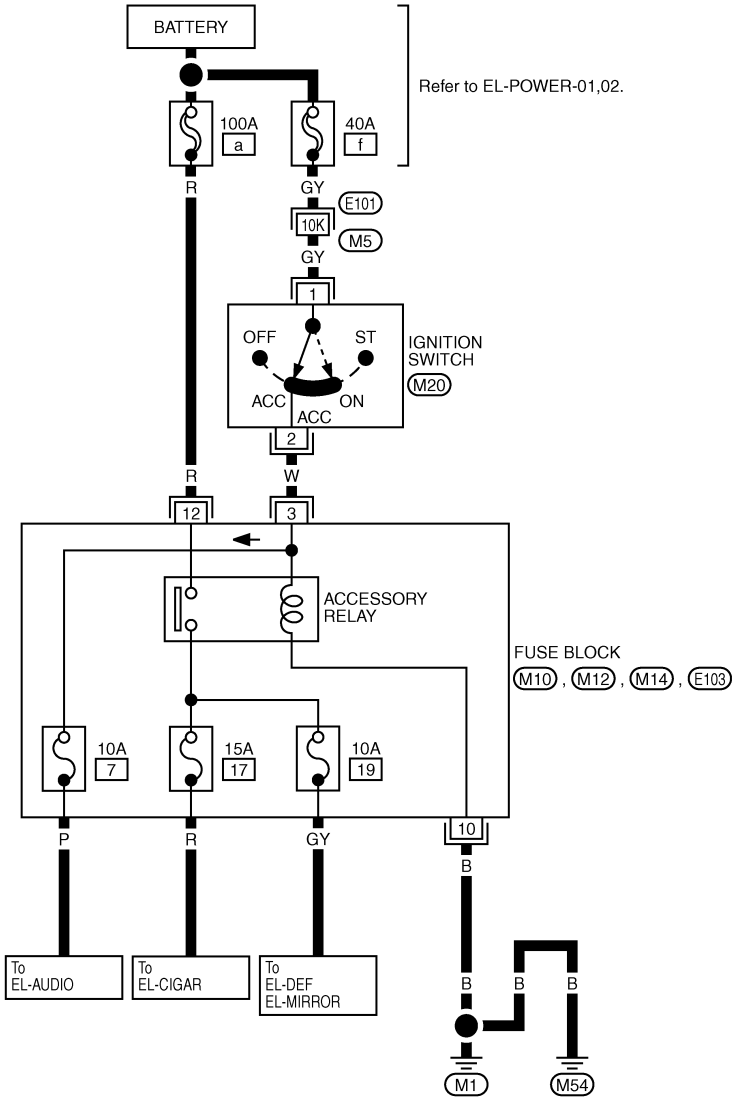

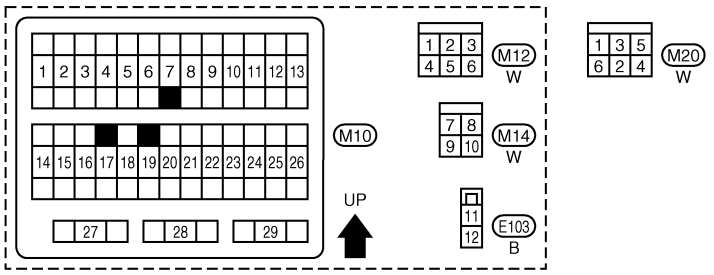

Refer to last page (Foldout page).
M5 , E101

GEL235B

IGNITION POWER SUPPLY — IGNITION SWITCH. IN “ON” AND/OR “START”

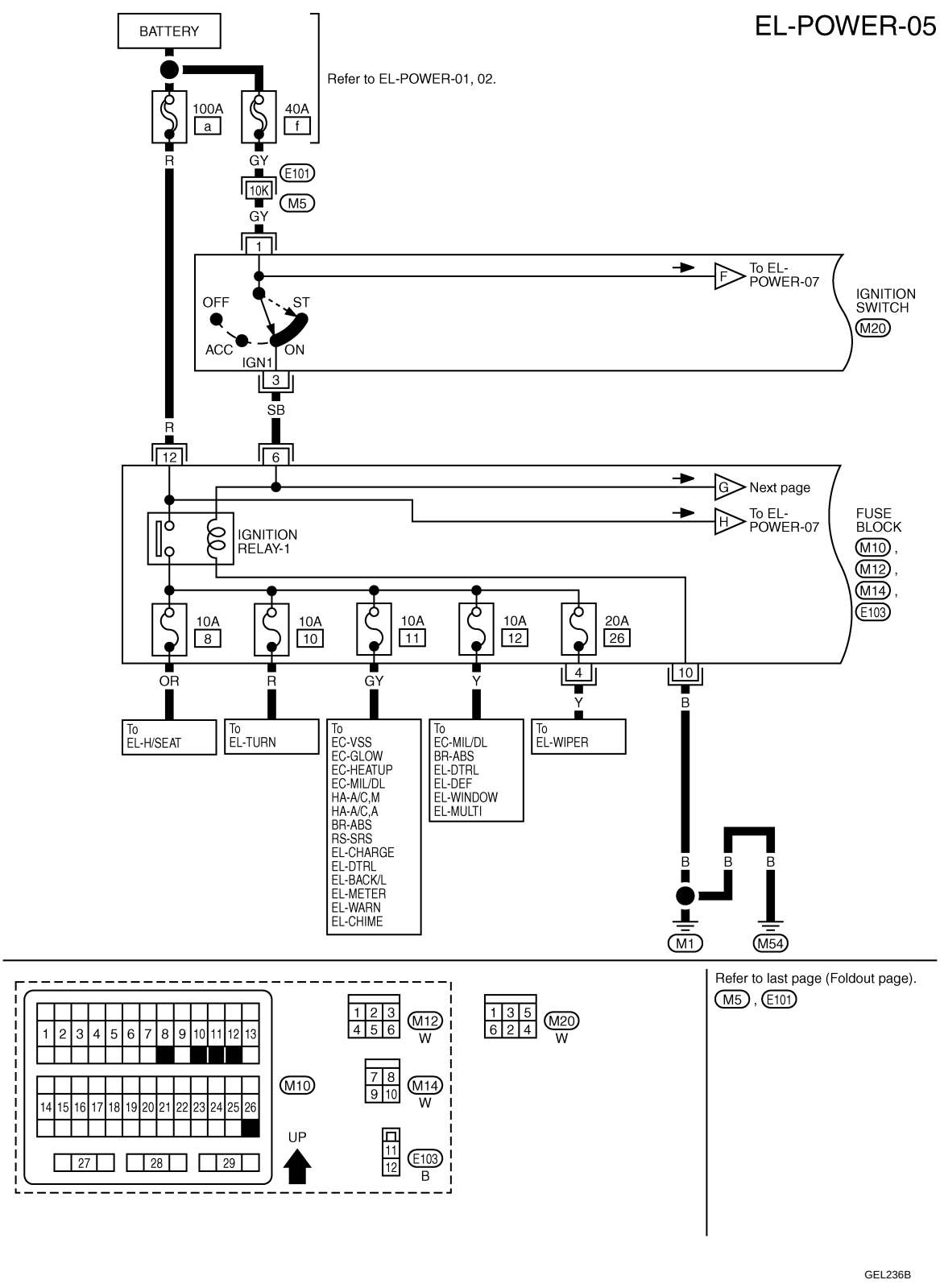

EL-POWER-06

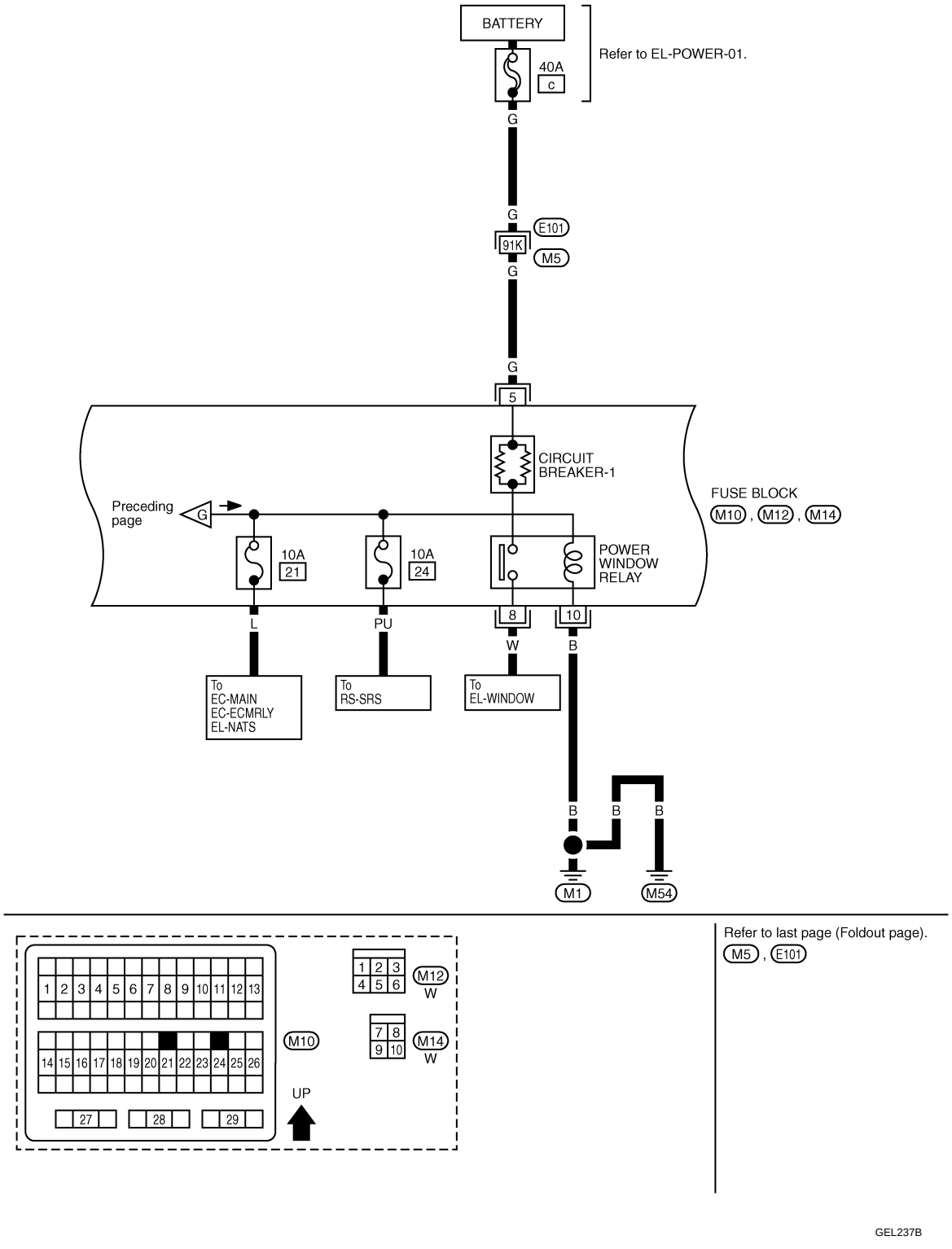
BATTERY
Refer to EL-POWER-01.
40A
c
G
G
E101
91K
M5
G
G
5
CIRCUIT
BREAKER-1
FUSE BLOCK
M10 , M12 , M14
Preceding
page
G
10A
21
10A
24
POWER
WINDOW
RELAY
L
PU
8
10
W
B
To
EC-MAIN
EC-ECMRLY
EL-NATS
To
RS-SRS
To
EL-WINDOW
B
B
B
M1
M54
1 2 3 4 5 6 7 8 9 10 11 12 13
14 15 16 17 18 19 20 21 22 23 24 25 26
27
28
29
M10
UP
1 2 3
4 5 6
M12
W
7 8
9 10
M14
W
Refer to last page (Foldout page).
M5 , E101
GEL237B

EL-POWER-07

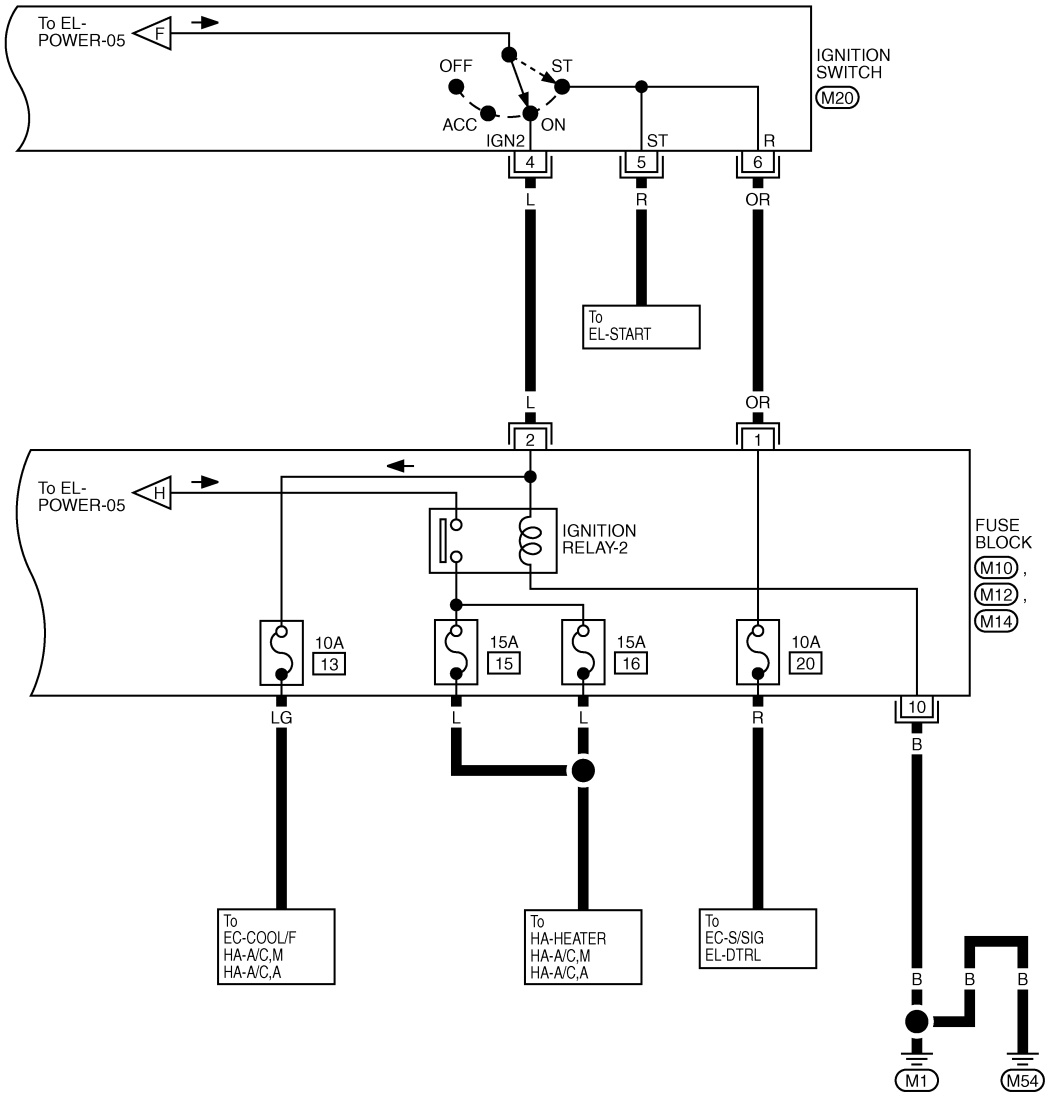

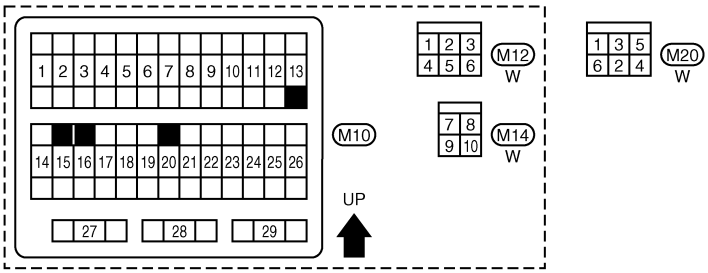

GEL238B

BATTERY

Battery

INFOID:0000000003663718

Applied model	YD25 engine (Standard)	YD25 engine (Cold)
Type	110D26R	80D23L and 80D23R
20 hour rate capacity (V-AH)	12 - 75	12 - 62×2

STARTING SYSTEM

Wiring Diagram - START -

INFOID:0000000003792698

EL-START-01

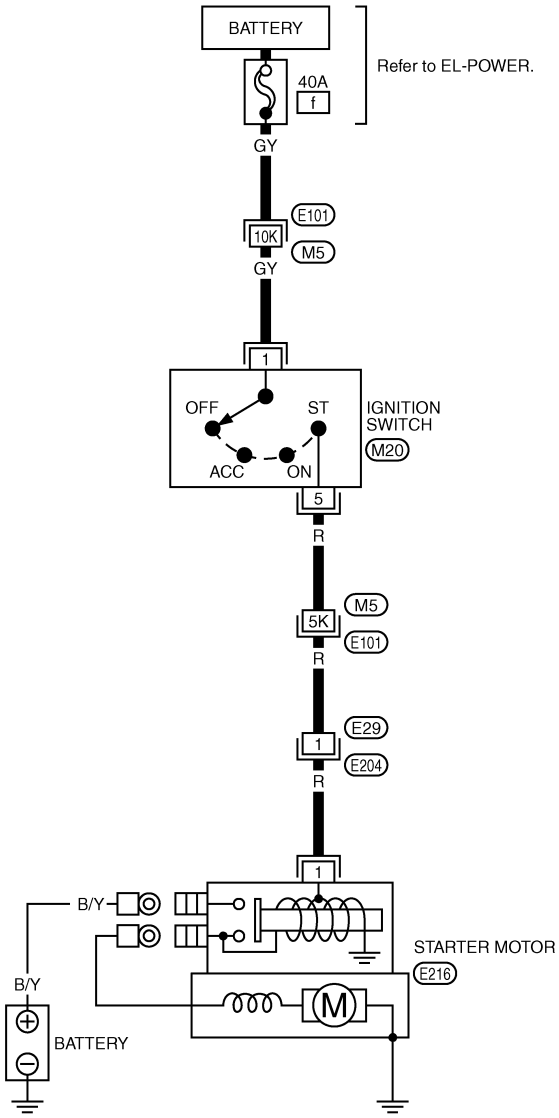

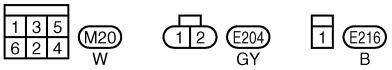

Refer to last page (Foldout page).
M5 , E101

GEL239B

CHARGING SYSTEM

Wiring Diagram - CHARGE -

INFOID:0000000003792708

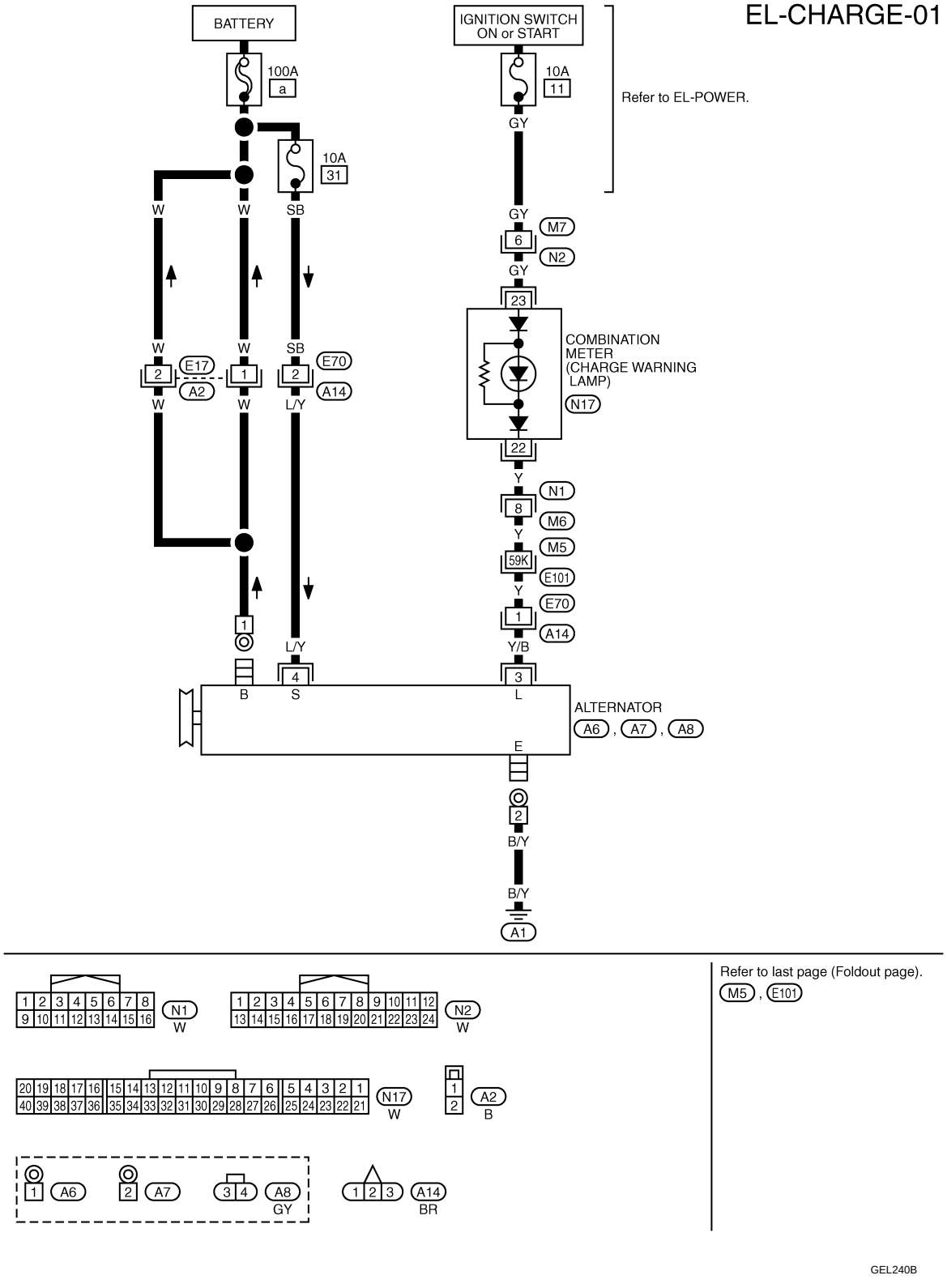

HEADLAMP - CONVENTIONAL TYPE -

Wiring Diagram - H/LAMP -

INFOID:0000000003795868

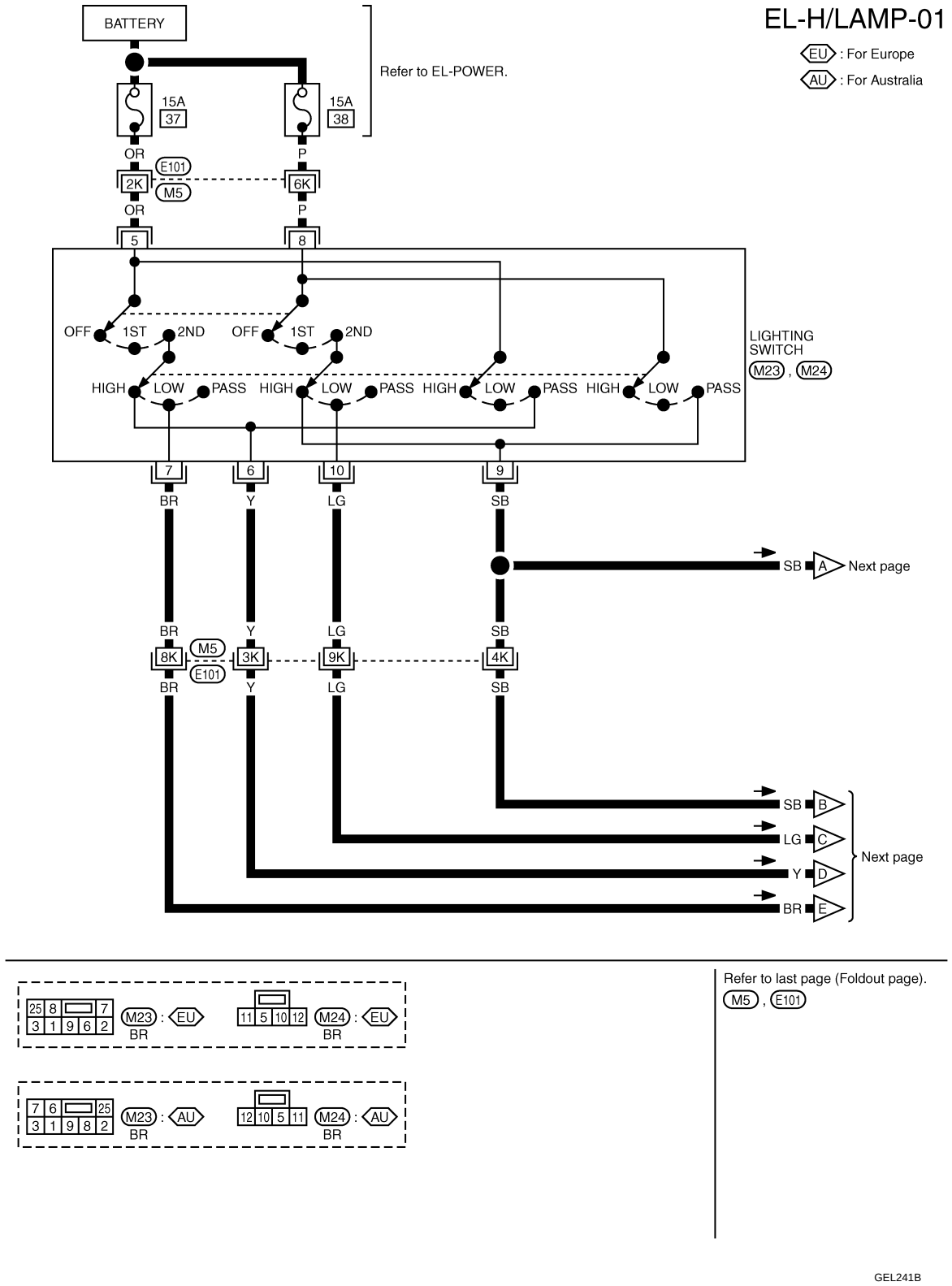

EL-H/LAMP-02

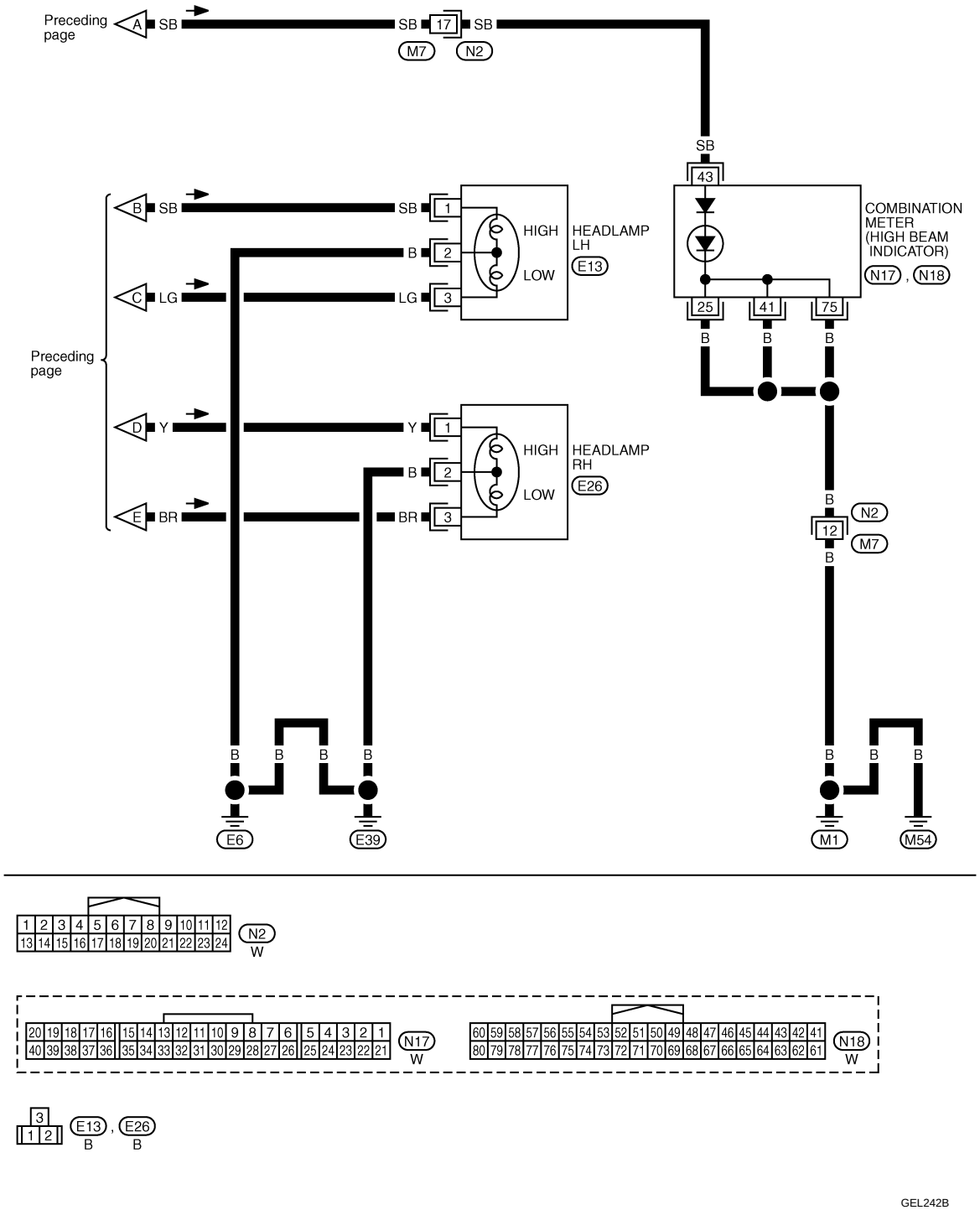

Aiming Adjustment

INFOID:0000000003663719

DESCRIPTION

When performing headlamp aiming adjustment, use an aiming machine, aiming wall screen or headlamp tester. Aiming machine should be in good repair, calibrated and operated in accordance with respective operation manuals.

If any aiming machine is not available, aiming adjustment can be done as follows:

For details, refer to the regulations in your own country.

- Keep all tires inflated to correct pressures.
- Place vehicle and tester on one and same flat surface.
- See that there is no-load in vehicle (coolant, engine oil filled up to correct level and full fuel tank) other than the driver (or equivalent weight placed in driver's position).

CAUTION:

Be sure aiming switch is set to “0” when performing aiming adjustment (with headlamp aiming switch).

ADJUSTMENT SCREW

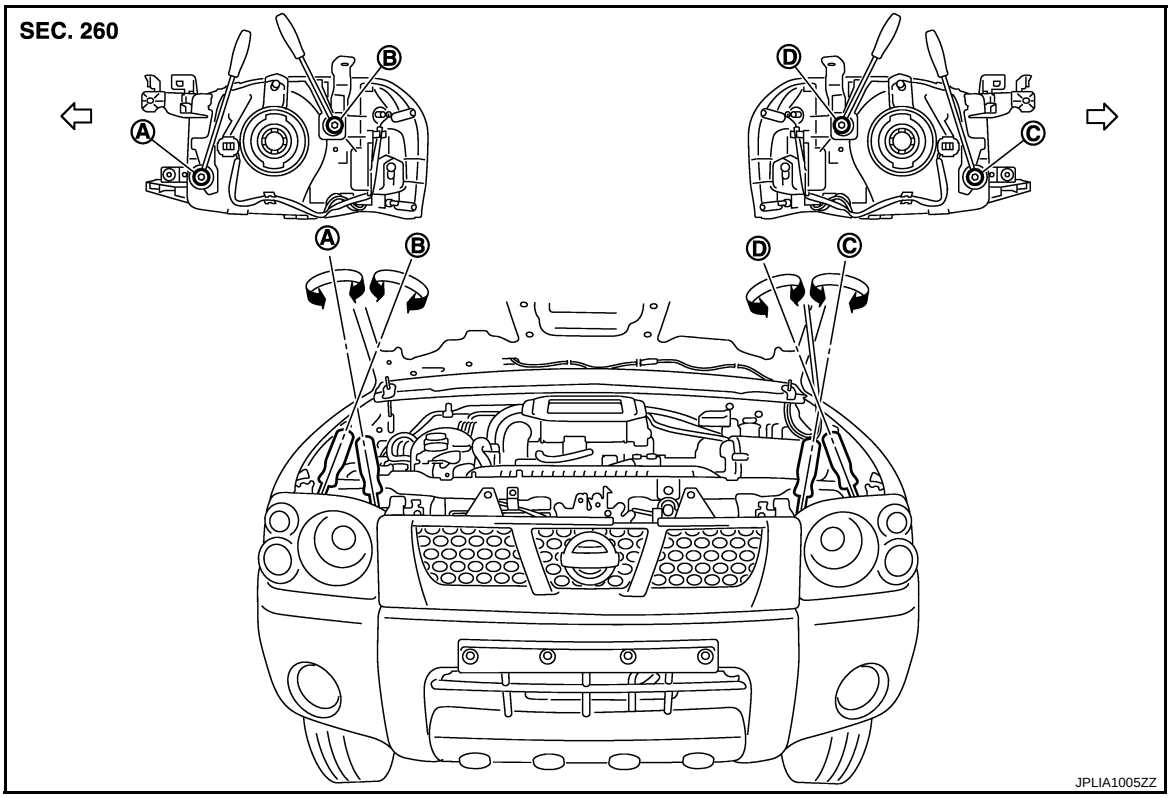

A. Headlamp RH (UP/DOWN) adjustment screw
B. Headlamp RH (INSIDE/OUTSIDE) adjustment screw
C. Headlamp LH (UP/DOWN) adjustment screw
D. Headlamp LH (INSIDE/OUTSIDE) adjustment screw

⇦: Vehicle center

Adjustment screw		Screw driver rotation	Facing direction
A	Headlamp RH (UP/DOWN)	Clockwise	UP
		Counterclockwise	DOWN
B	Headlamp RH (INSIDE/OUTSIDE)	Clockwise	INSIDE
		Counterclockwise	OUTSIDE
C	Headlamp LH (UP/DOWN)	Clockwise	UP
		Counterclockwise	DOWN
D	Headlamp LH (INSIDE/OUTSIDE)	Clockwise	INSIDE
		Counterclockwise	OUTSIDE

PROCEDURE (LHD MODELS)

1. Place the screen.
   NOTE:
   - Stop the vehicle at an angle that is perpendicular to the wall.

- Set the screen so that it is perpendicular to a level load surface.

2. Face the vehicle squarely toward the screen and make the distance between the headlamp center and the screen 10 m (32.8 ft).
3. Start the engine and turn the headlamp (LO) ON.
   NOTE:
   Block light from the headlamp that is not being adjusted with a thick fabric or another object, so that it does not reach the adjustment screen.
   CAUTION:
   Do not cover lens surface with tape, etc. because it is made from plastic.
4. Use the aiming adjustment screw to adjust the elbow point projected by the low beams on the screen, so that it is within the aiming adjustment area.
   - Low beam distribution on the screen

A. Aiming adjustment area
B. Elbow point
C. Headlamp center
H. Horizontal center line of headlamp
V. Vertical center line of headlamp

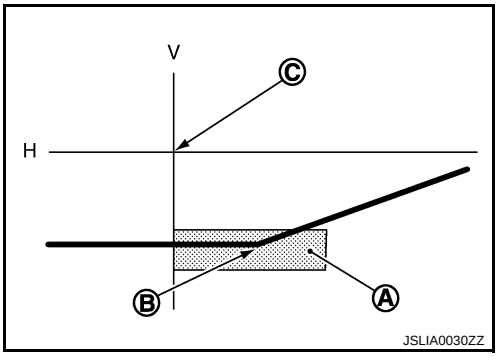

- Details for aiming adjustment

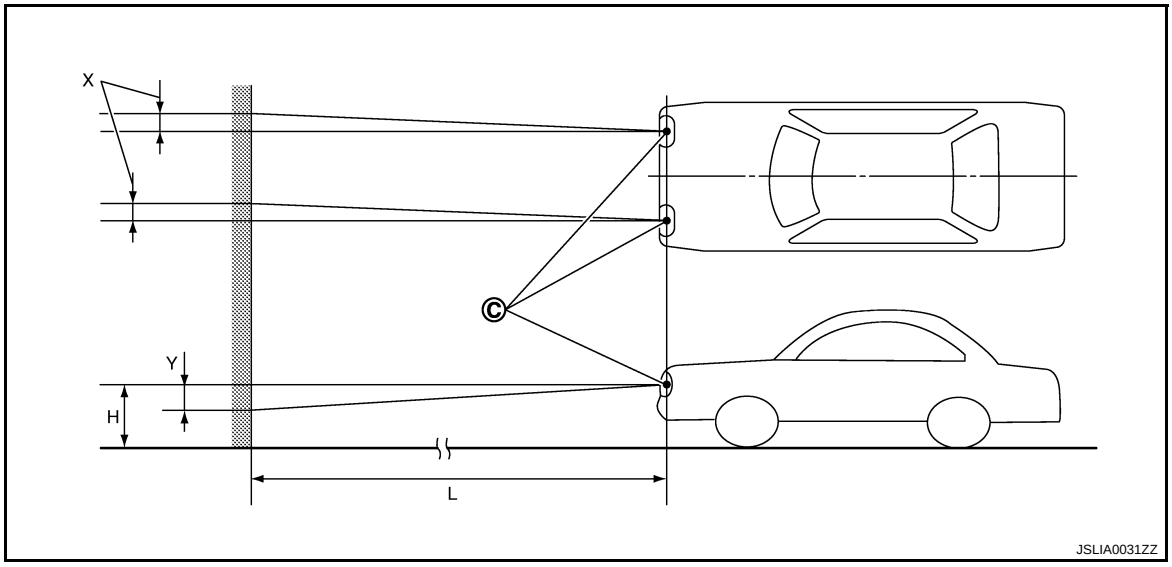

C. Vertical center line of headlamp
H. Horizontal center line of headlamp
L. Distance from headlamp center to screen
X. Aiming adjustment position (Lateral)
Y. Aiming adjustment position (Vertical)

Distance from headlamp center to screen (L) : 10m (32.8 ft)

Unit: mm (in)

Aiming adjustment area		
Vertical direction (Y) (Lower side from headlamp center height)		Lateral direction (X) (Right side from headlamp center line)
Highest light axis	100 (3.94)	0 – 100 (0 – 3.94)
Target light axis	130 (5.12)	
Lowest light axis	150 (5.91)	

PROCEDURE (RHD MODELS)

1. Place the screen.
   NOTE:
   - Stop the vehicle at an angle that is perpendicular to the wall.
   - Set the screen so that it is perpendicular to a level load surface.
2. Face the vehicle squarely toward the screen and make the distance between the headlamp center and the screen 10 m (32.8 ft).
3. Start the engine and turn the headlamp (LO) ON.
   NOTE:
   Block light from the headlamp that is not being adjusted with a thick fabric or another object, so that it does not reach the adjustment screen.
   CAUTION:
   Do not cover lens surface with tape, etc. because it is made from plastic.
4. Use the aiming adjustment screw to adjust the elbow point projected by the low beams on the screen, so that it is within the aiming adjustment area.
   - Low beam distribution on the screen

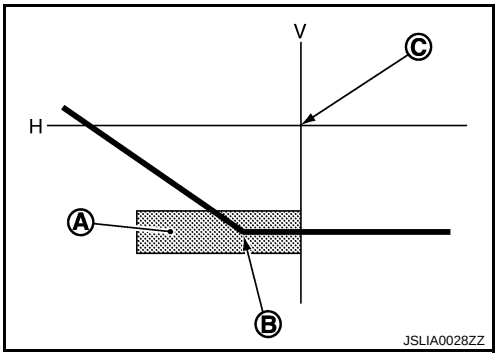

A. Aiming adjustment area
B. Elbow point
C. Headlamp center
H. Horizontal center line of headlamp
V. Vertical center line of headlamp

- Details for aiming adjustment

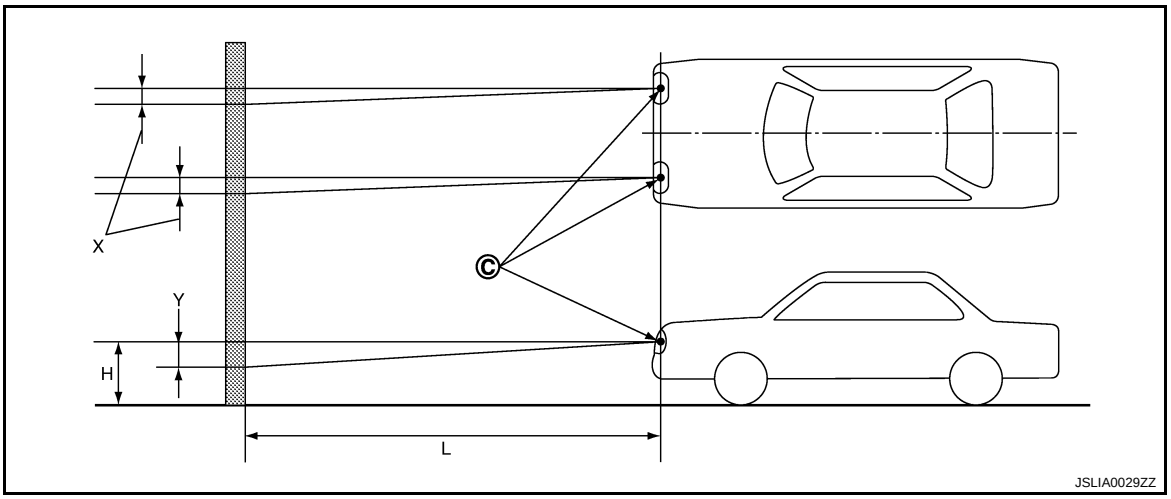

C. Vertical center line of headlamp
H. Horizontal center line of headlamp
L. Distance from headlamp center to screen
X. Aiming adjustment position (Lateral)
Y. Aiming adjustment position (Vertical)

Distance from headlamp center to screen (L) : 10m (32.8 ft)

Unit: mm (in)

Aiming adjustment area		
Vertical direction (Y) (Lower side from headlamp center height)		Lateral direction (X) (Left side from headlamp center line)
Highest light axis	100 (3.94)	0 – 100 (0 – 3.94)
Target light axis	130 (5.12)	
Lowest light axis	150 (5.91)	

HEADLAMP - DAYTIME LIGHT SYSTEM -

Schematic

INFOID:0000000003803341

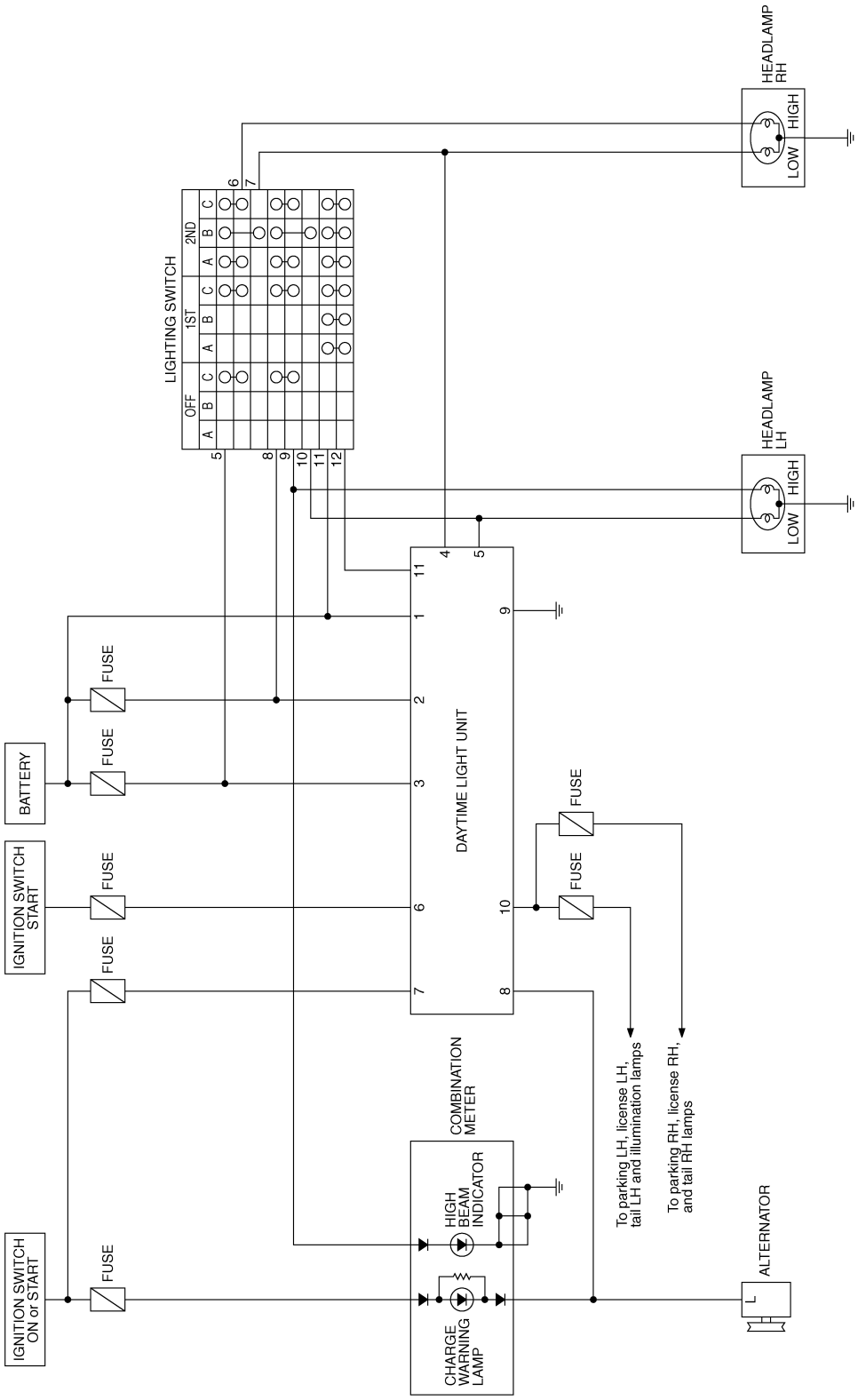

Wiring Diagram -DTRL-

INFOID:0000000003792699

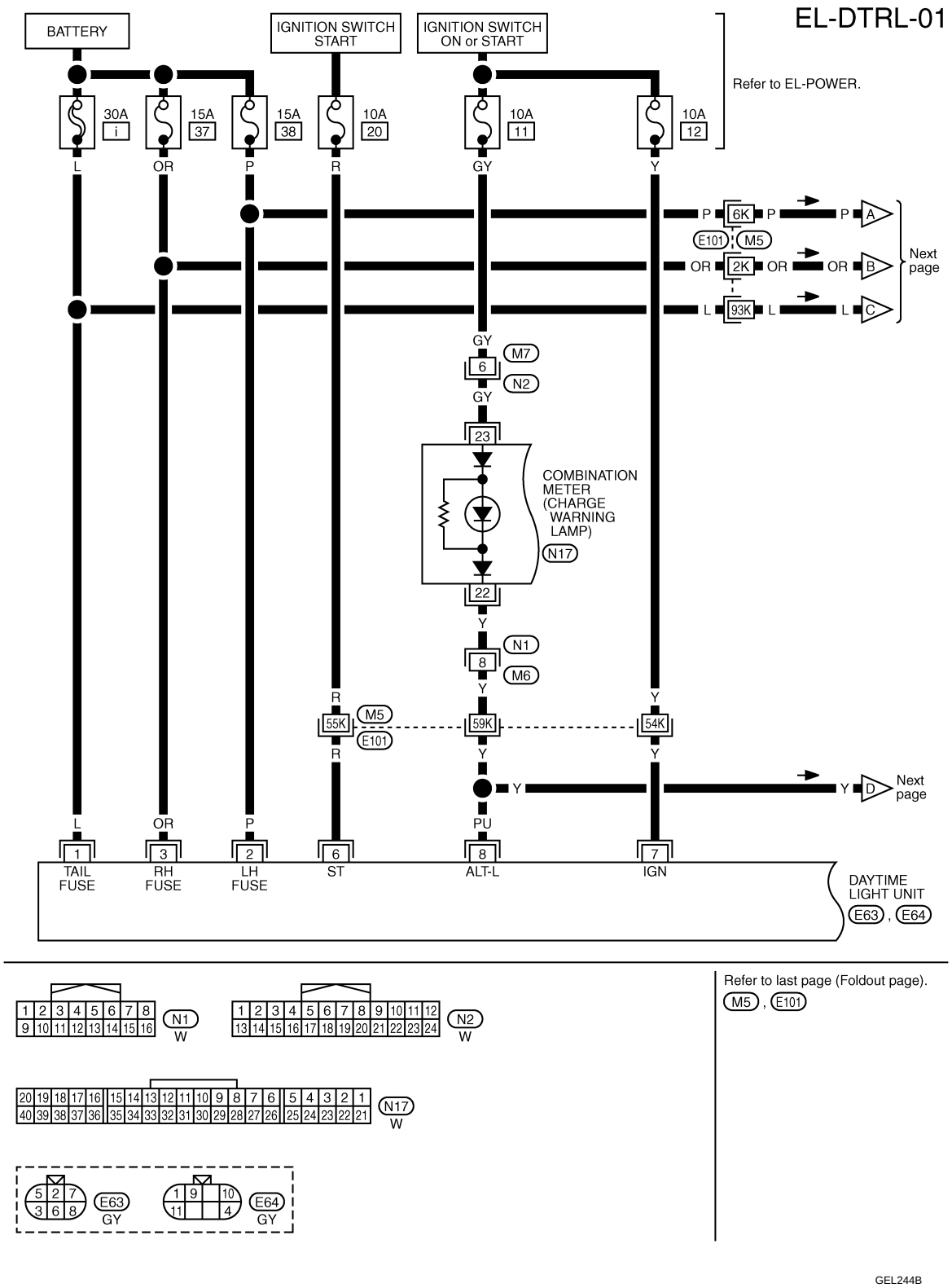

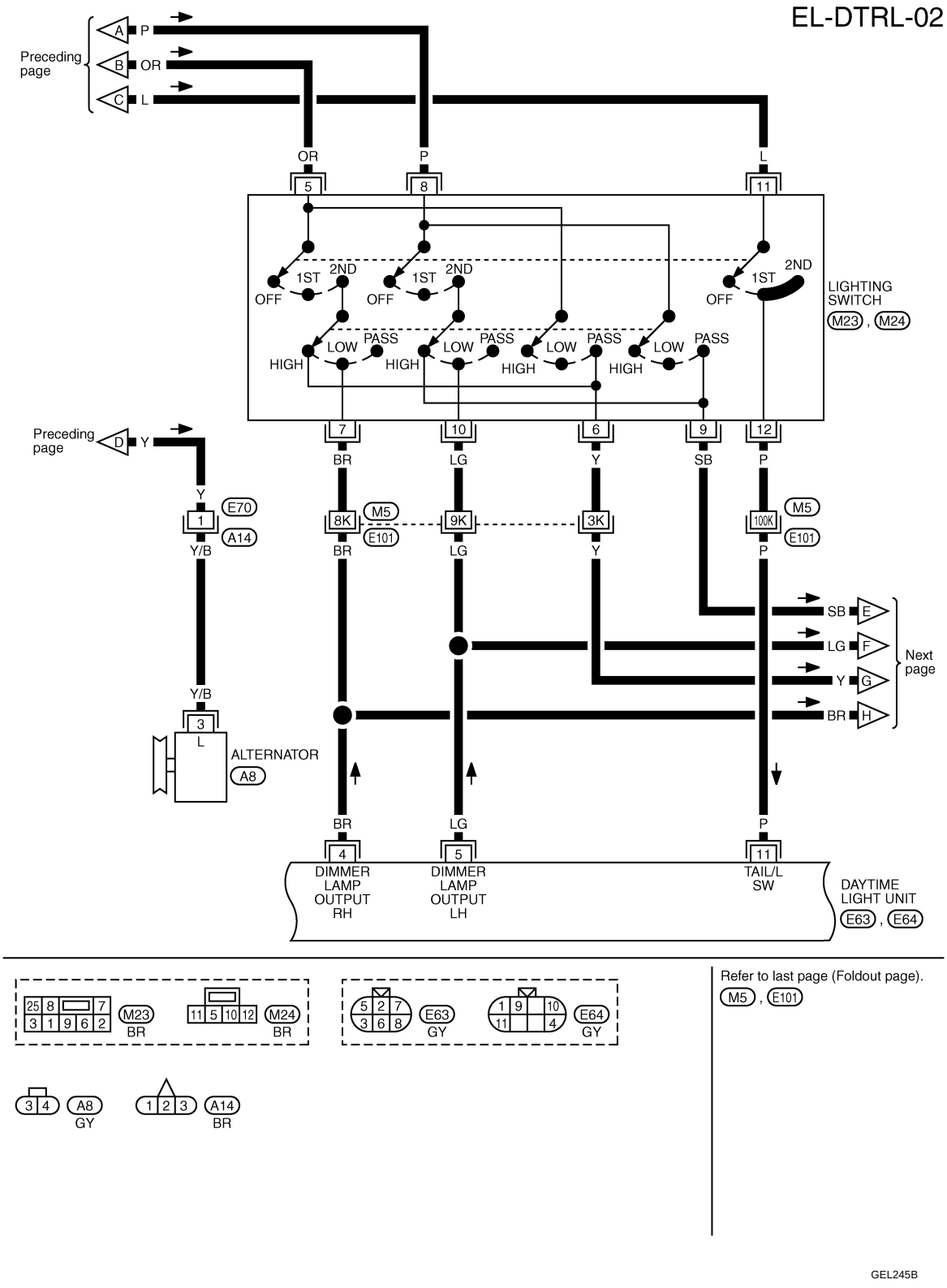
EL-DTRL-02
Preceding page
A P
B OR
C L
OR
P
L
5
8
11
1ST
2ND
OFF
LOW
PASS
HIGH
LIGHTING SWITCH
M23 , M24
Preceding page
D Y
7
10
6
9
12
BR
LG
Y
SB
P
Y
E70
1
A14
Y/B
8K
M5
E101
9K
3K
100K
Y/B
3
L
ALTERNATOR
A8
SB E
LG F
Y G
BR H
Next page
DIMMER LAMP OUTPUT RH
DIMMER LAMP OUTPUT LH
TAIL/L SW
DAYTIME LIGHT UNIT
E63 , E64
M23
M24
E63
E64
GY
A8
A14
Refer to last page (Foldout page).
M5 , E101
GEL245B

EL-DTRL-03

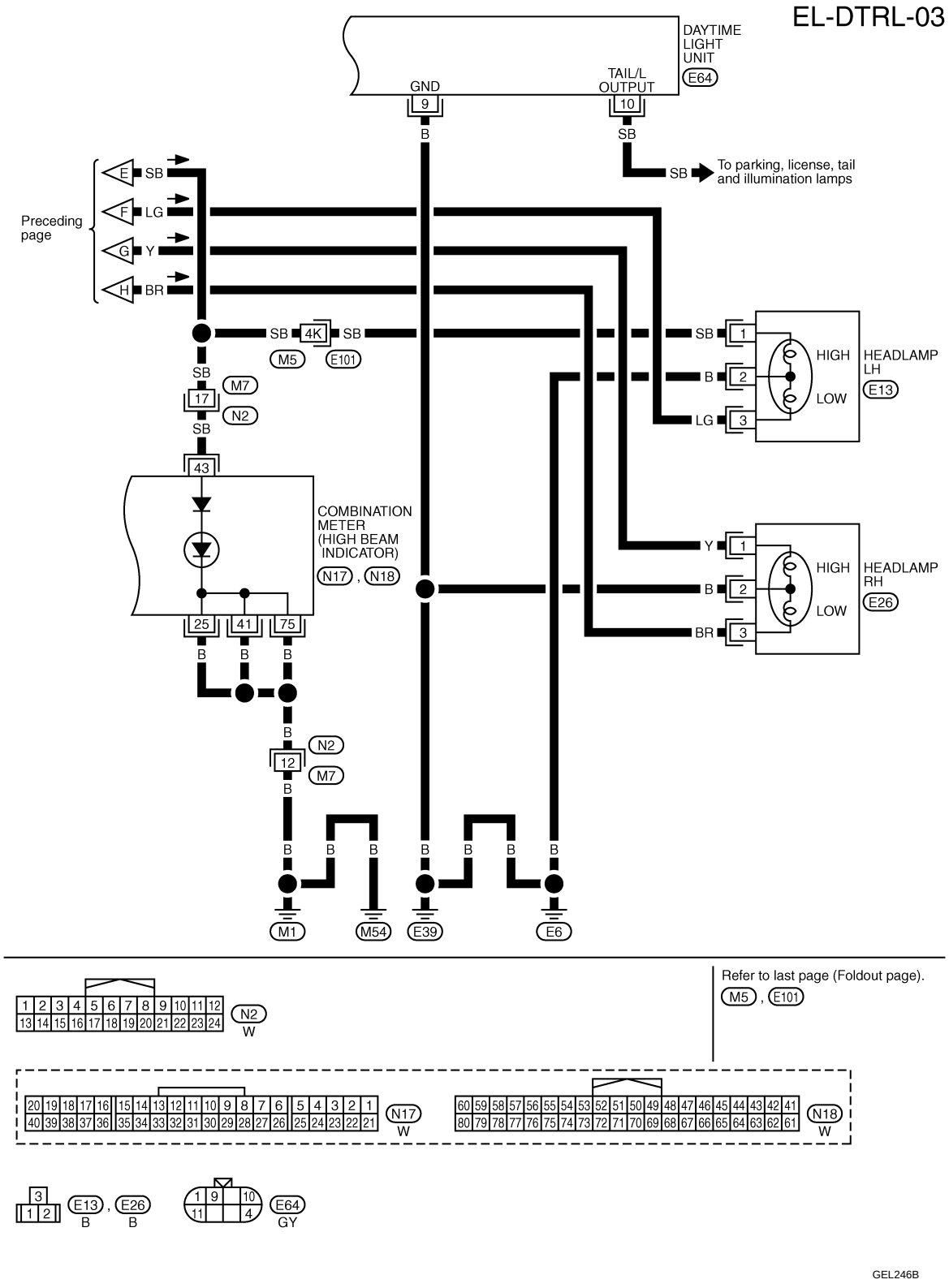
DAYTIME LIGHT UNIT
E64
GND
9
TAIL/L OUTPUT
10
B
SB
SB
To parking, license, tail and illumination lamps
Preceding page
E SB
F LG
G Y
H BR
SB 4K SB
M5 E101
SB
M7
17
N2
SB
43
COMBINATION METER (HIGH BEAM INDICATOR)
N17 , N18
25 41 75
B B B
B
N2
12
M7
B
SB 1
B 2
LG 3
HIGH
LOW
HEADLAMP LH
E13
Y 1
B 2
BR 3
HIGH
LOW
HEADLAMP RH
E26
M1 M54 E39 E6
Refer to last page (Foldout page).
M5 , E101
N2
W
N17
W
N18
W
E13 , E26
B B
E64
GY
GEL246B

HEADLAMP AIMING CONTROL

Wiring Diagram - H/AIM -

INFOID:0000000003792700

EL-H/AIM-01

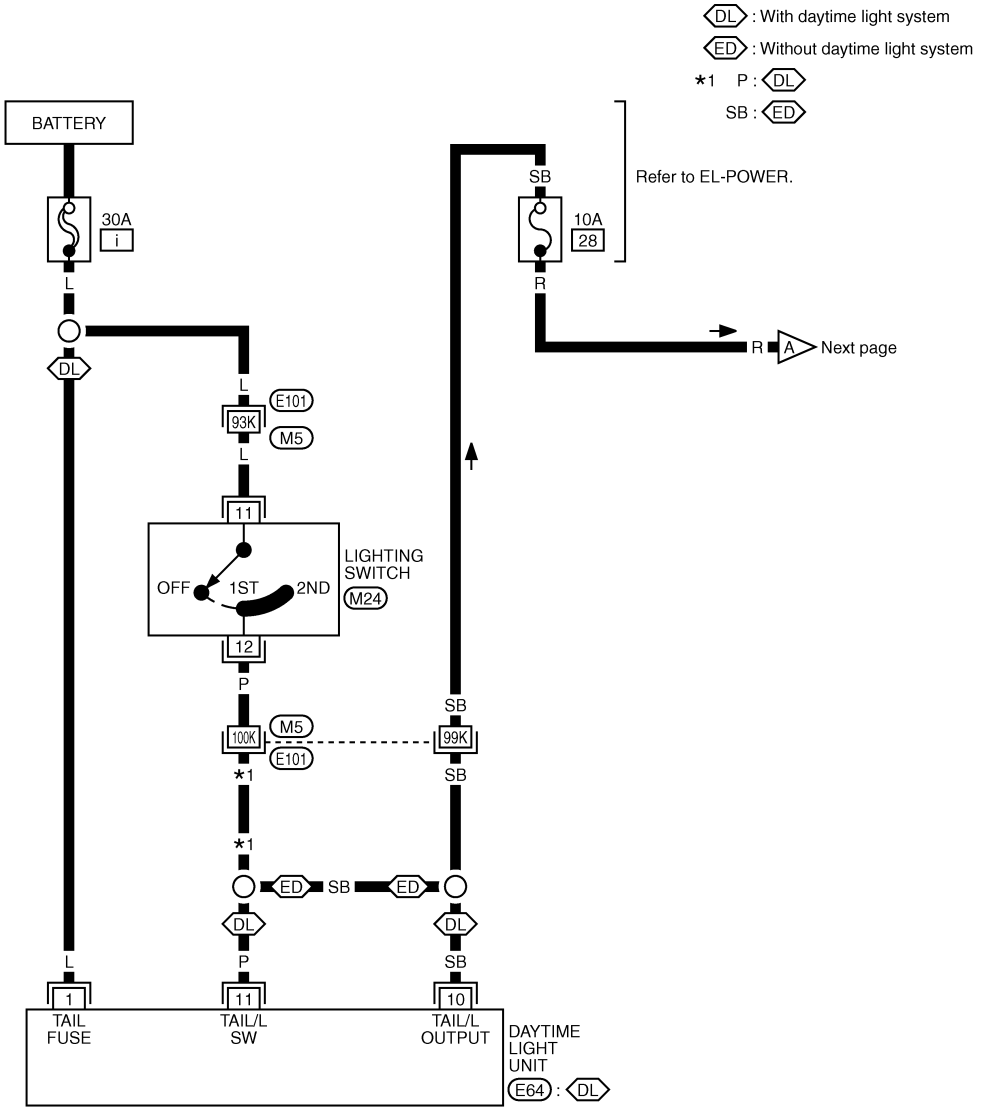

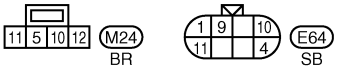

Refer to last page (Foldout page).
M5 , E101

GEL247B

EL-H/AIM-02

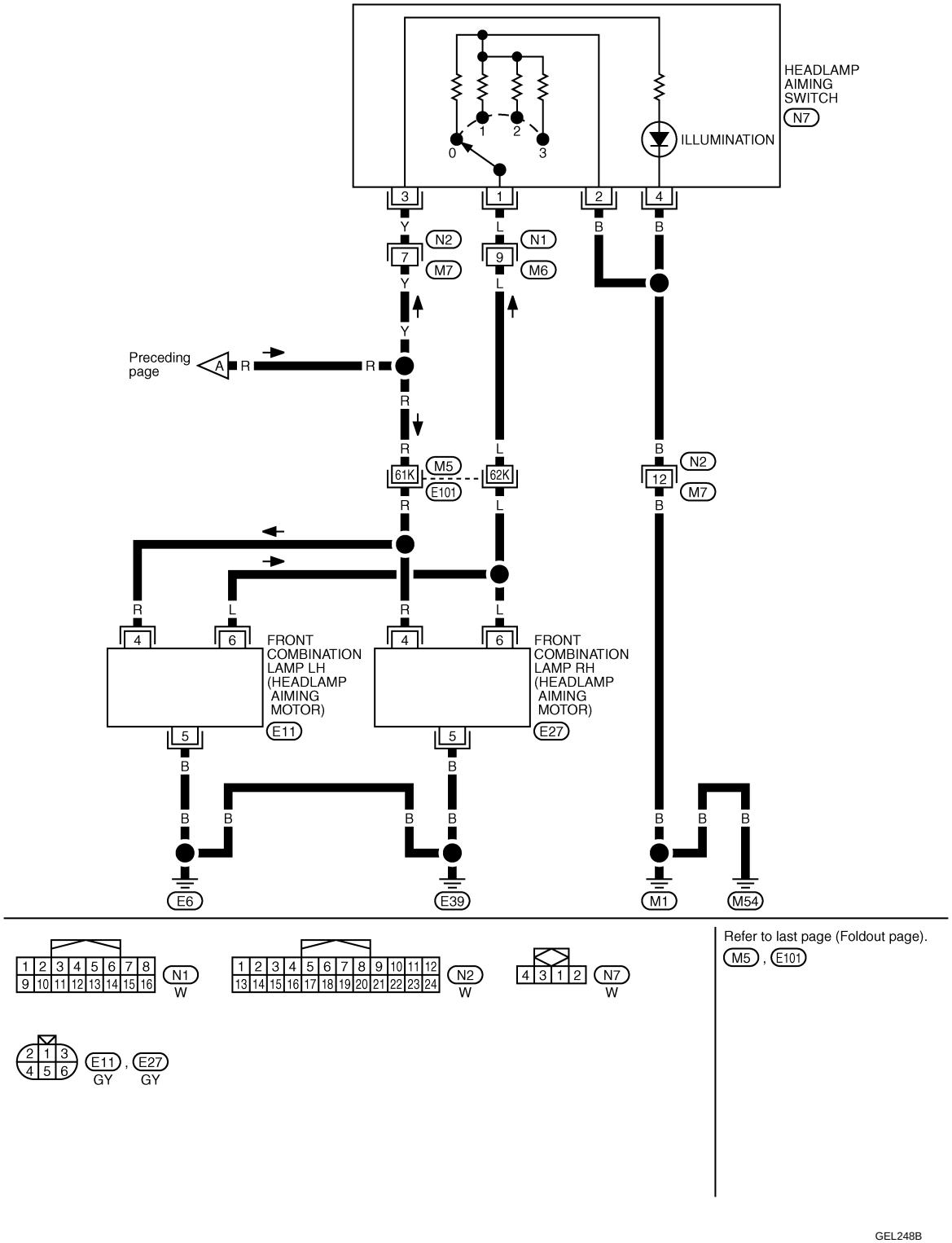
HEADLAMP AIMING SWITCH
N7
ILLUMINATION
0
1
2
3
N2
M7
N1
M6
Preceding page
A
R
M5
E101
61K
62K
12
FRONT COMBINATION LAMP LH (HEADLAMP AIMING MOTOR)
E11
FRONT COMBINATION LAMP RH (HEADLAMP AIMING MOTOR)
E27
E6
E39
M1
M54
Refer to last page (Foldout page).
M5 , E101
N1
W
N2
W
N7
W
E11 , E27
GY
GY
GEL248B

FRONT FOG LAMP

Wiring Diagram - F/FOG -/LHD Models

INFOID:0000000003803358

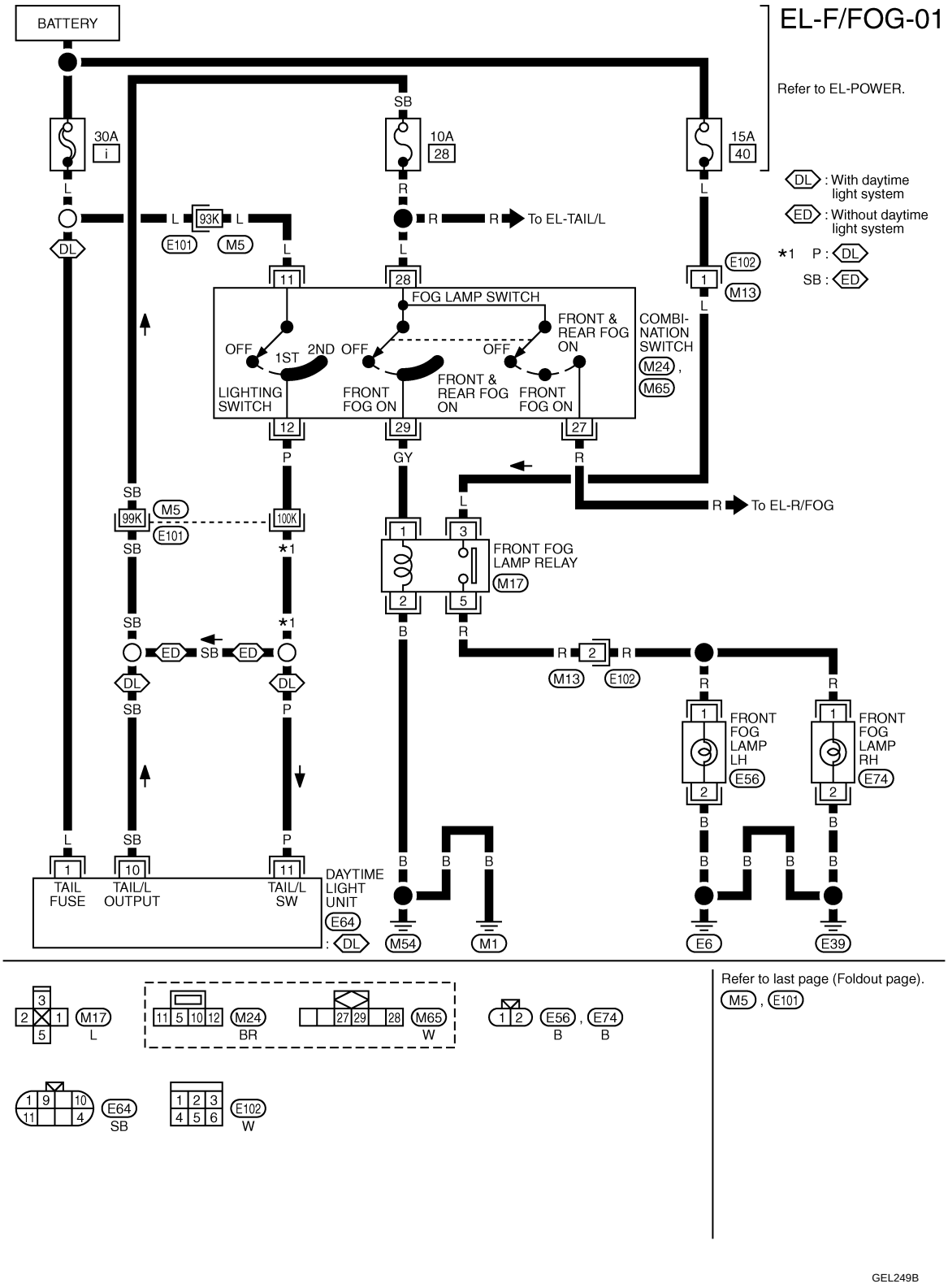

GEL249B

Wiring Diagram - F/FOG -/RHD Models

INFOID:0000000003838684

EL-F/FOG-02

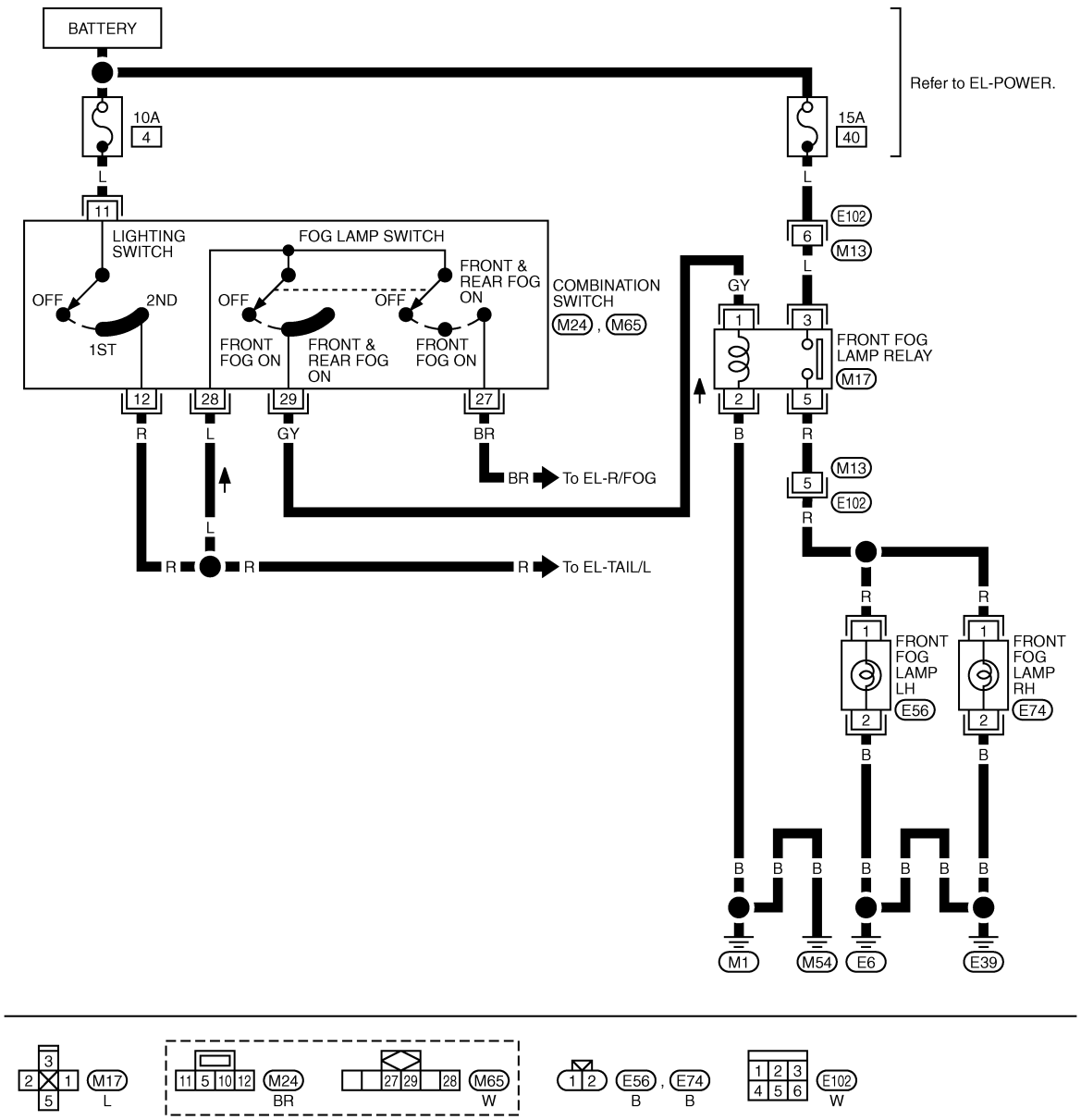

GEL250B

Aiming Adjustment

INFOID:0000000003663722

DESCRIPTION

Front fog lamp is a semi-sealed beam type which uses a replaceable halogen bulb. Before performing aiming adjustment, make sure of the following.

- Keep all tires inflated to correct pressure.

- Place vehicle on level ground.
- See that vehicle is unloaded (except for full levels of coolant, engine oil and fuel, and spare tire, jack, and tools). Have the driver or equivalent weight placed in driver seat.

ADJUSTMENT SCREW

Adjust aiming in the vertical direction by turning adjusting screw.

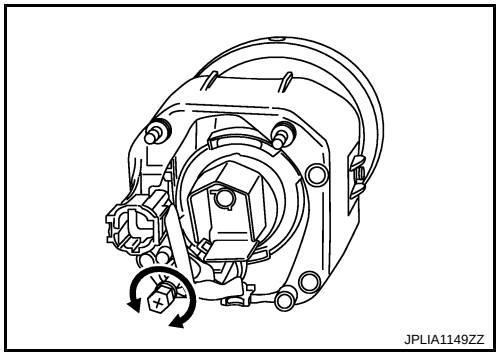

PROCEDURE

1. Place the screen.
   NOTE:
   - Stop the vehicle facing the wall.
   - Place the board on a plain road vertically.
2. Face the vehicle with the screen. Maintain 10 m (32.8 ft) between the front fog lamp center and the screen.
3. Start the engine. Turn the front fog lamp ON.
   NOTE:
   Shut off the headlamp light with the board to prevent from illuminating the adjustment screen.
   CAUTION:
   Never cover the lens surface with a tape etc. The lens is made of resin.
4. Adjust the cutoff line height (A) with the aiming adjustment screw so that the distance (X) between the horizontal center line of front fog lamp (H) and (A) becomes 200 mm (7.87 in).

Front fog lamp light distribution on the screen

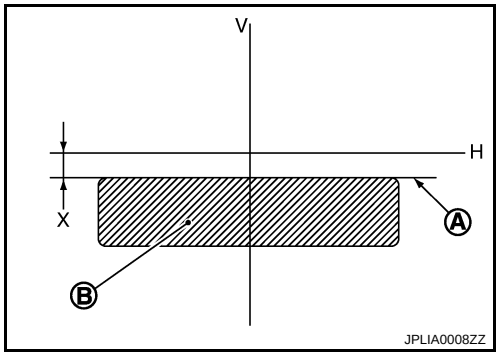

A : Cutoff line
B : High illuminance area
H : Horizontal center line of front fog lamp
V : Vertical center line of front fog lamp
X : Cutoff line height

REAR FOG LAMP

Wiring Diagram - R/FOG -/LHD Models without Front Fog Lamp

INFOID:0000000003795746

EL-R/FOG-01

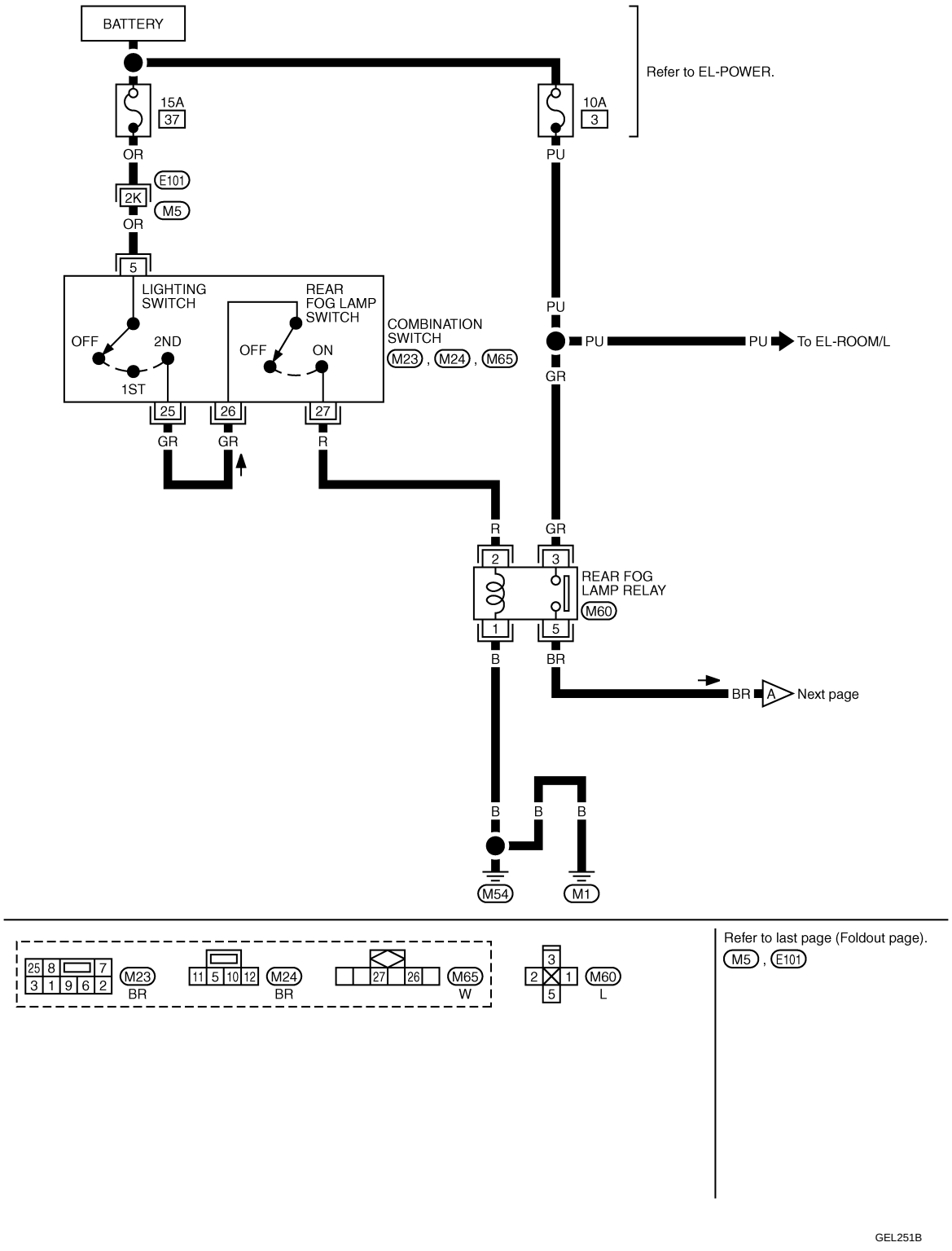

EL-R/FOG-02

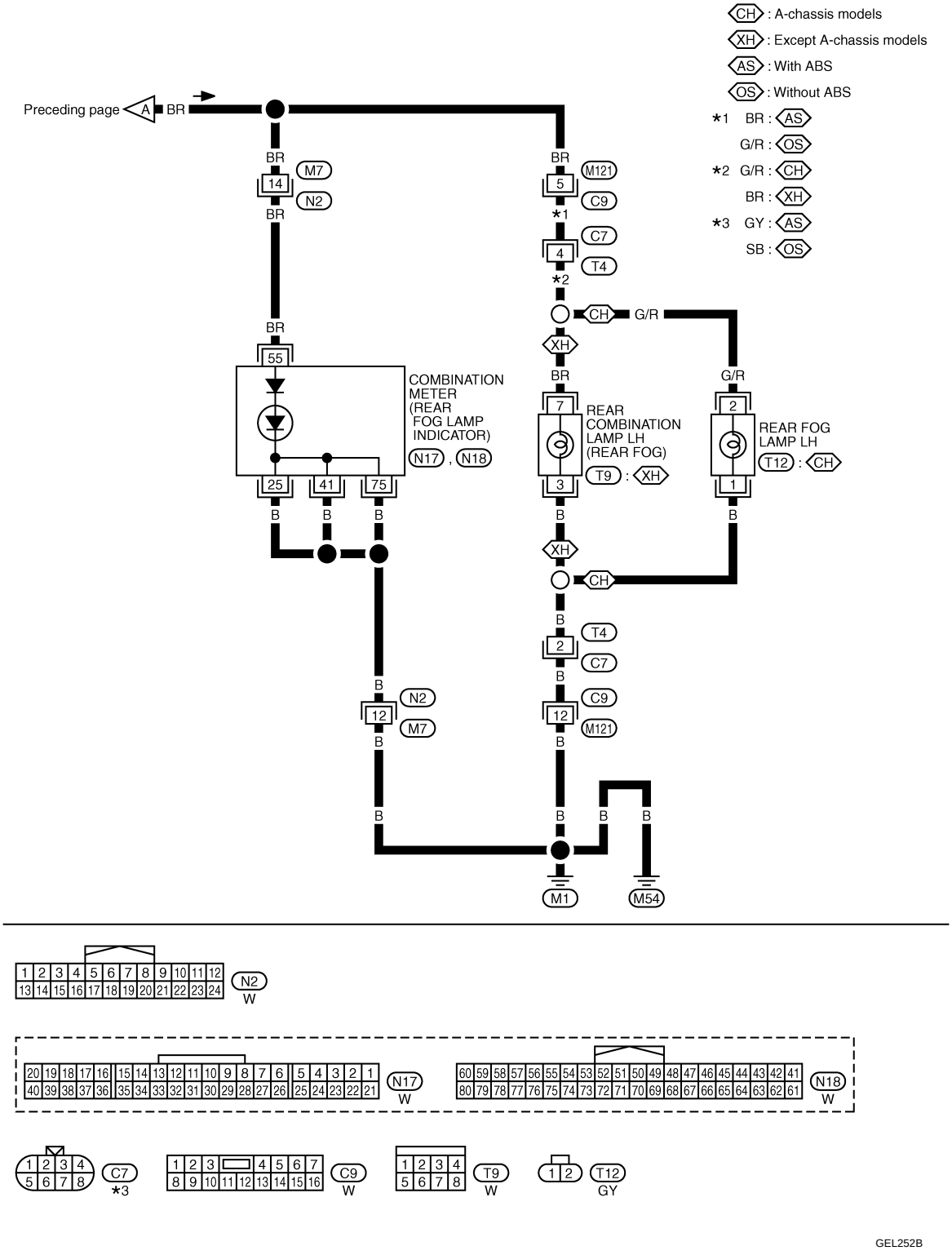
CH : A-chassis models
XH : Except A-chassis models
AS : With ABS
OS : Without ABS
*1 BR : AS
G/R : OS
*2 G/R : CH
BR : XH
*3 GY : AS
SB : OS
Preceding page
A
BR
M7
14
N2
M121
5
C9
*1
C7
4
T4
*2
CH
G/R
XH
55
COMBINATION METER (REAR FOG LAMP INDICATOR)
N17 , N18
25
41
75
7
REAR COMBINATION LAMP LH (REAR FOG)
T9 : XH
3
2
REAR FOG LAMP LH
T12 : CH
1
B
12
M1
M54
GEL252B

Wiring Diagram - R/FOG -/RHD Models without Front Fog Lamp

INFOID:0000000003792701

EL-R/FOG-03

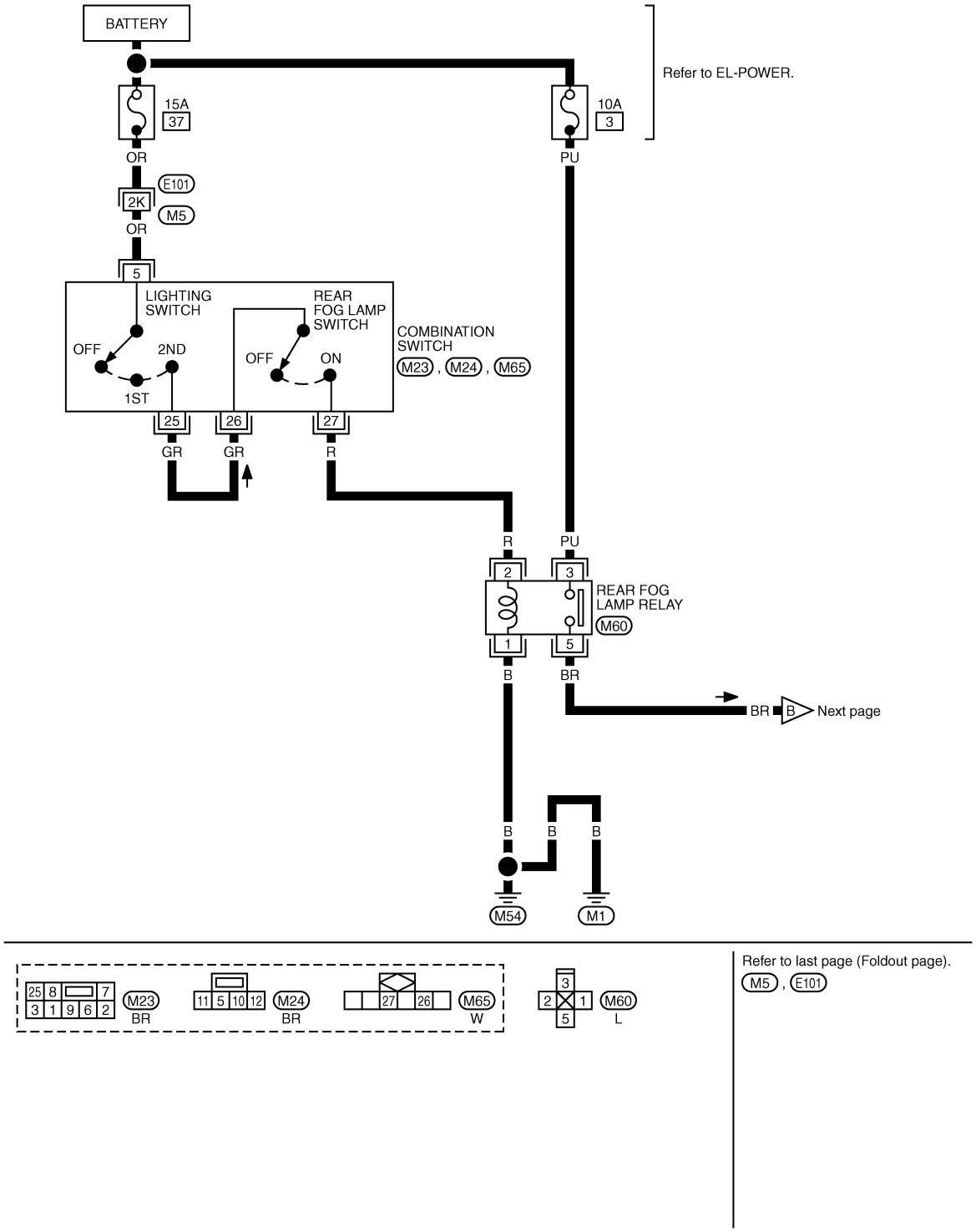

EL-R/FOG-04

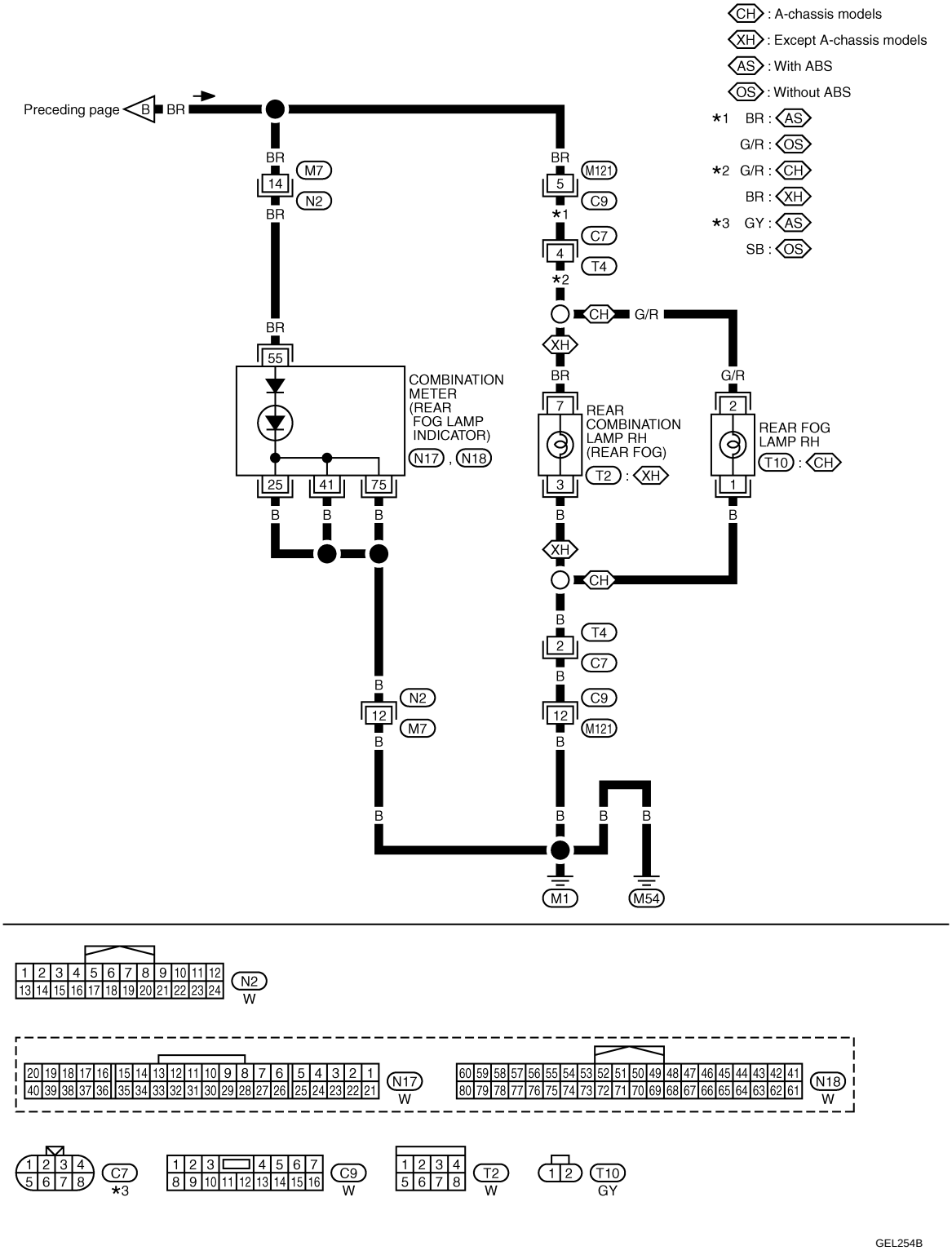
CH : A-chassis models
XH : Except A-chassis models
AS : With ABS
OS : Without ABS
*1 BR : AS
G/R : OS
*2 G/R : CH
BR : XH
*3 GY : AS
SB : OS
Preceding page
COMBINATION METER (REAR FOG LAMP INDICATOR)
N17 , N18
REAR COMBINATION LAMP RH (REAR FOG)
T2 : XH
REAR FOG LAMP RH
T10 : CH
M1
M54
GEL254B

Wiring Diagram - R/FOG -/LHD Models with Front Fog Lamp

INFOID:0000000003838685

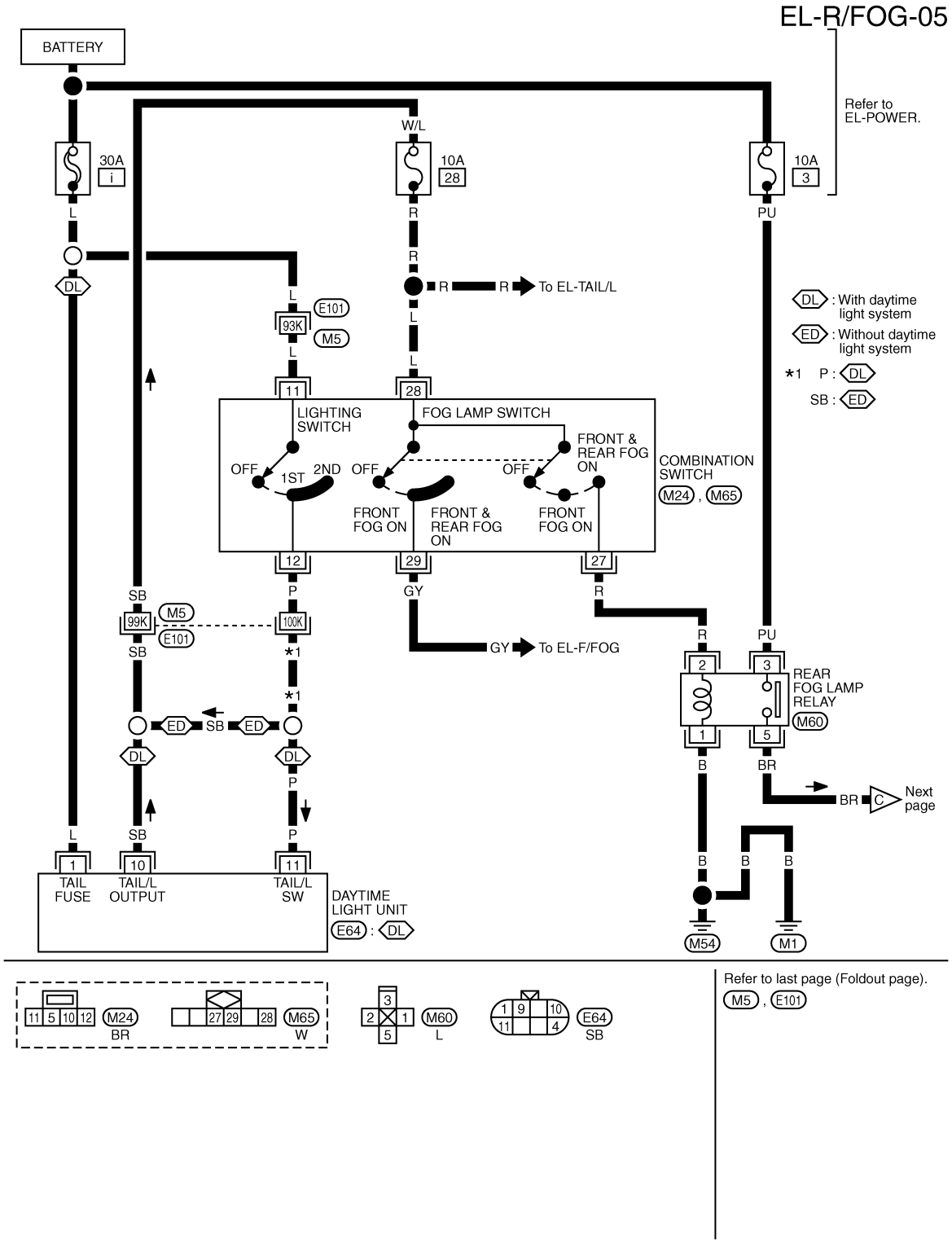

EL-R/FOG-06

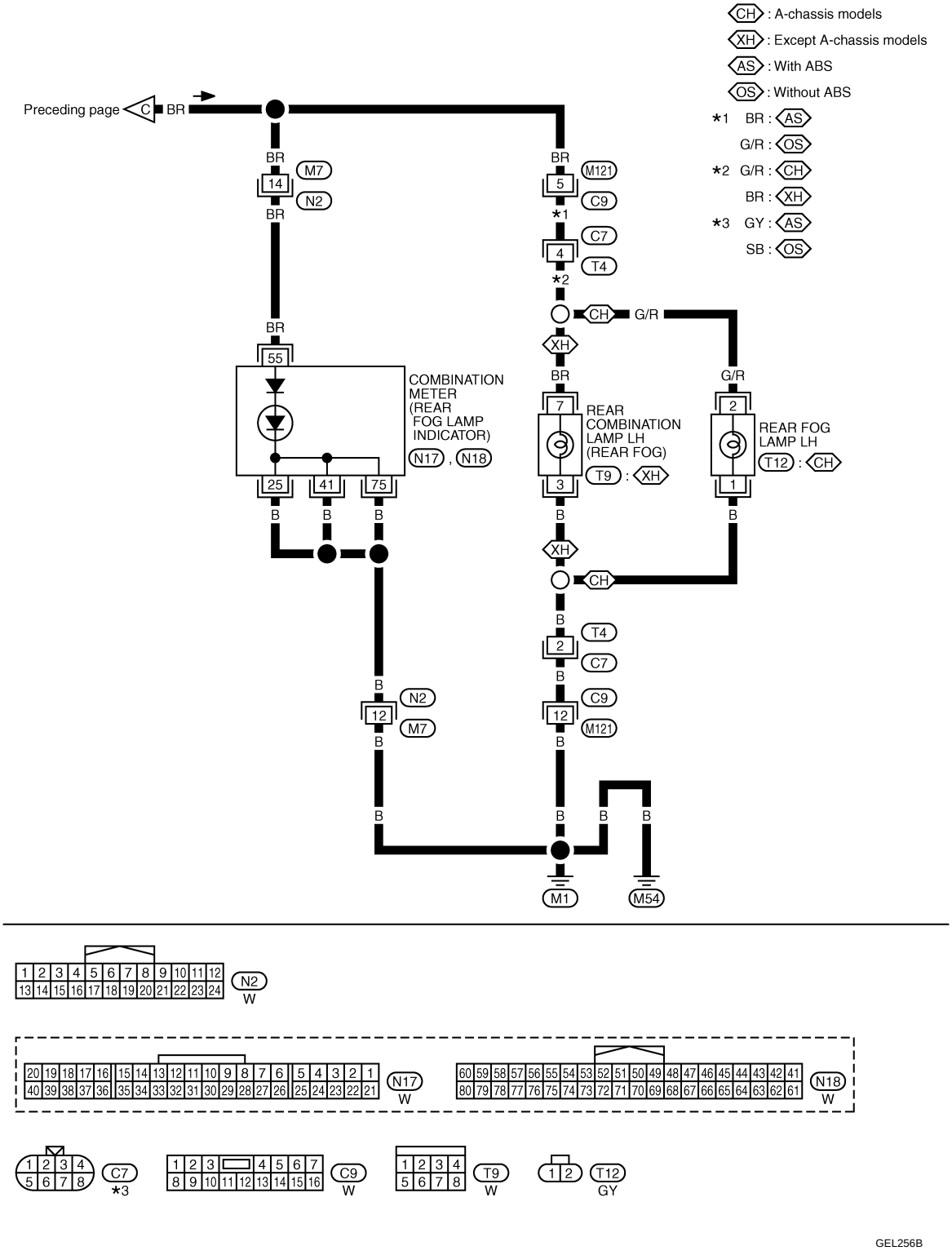
CH : A-chassis models
XH : Except A-chassis models
AS : With ABS
OS : Without ABS
*1 BR : AS
G/R : OS
*2 G/R : CH
BR : XH
*3 GY : AS
SB : OS
Preceding page
C
BR
M7
14
N2
M121
5
C9
*1
C7
4
T4
*2
CH
G/R
XH
55
COMBINATION METER (REAR FOG LAMP INDICATOR)
N17 , N18
25
41
75
7
REAR COMBINATION LAMP LH (REAR FOG)
T9 : XH
3
2
REAR FOG LAMP LH
T12 : CH
1
B
12
M1
M54
GEL256B

Wiring Diagram - R/FOG -/RHD Models with Front Fog Lamp

INFOID:0000000003838686

EL-R/FOG-07

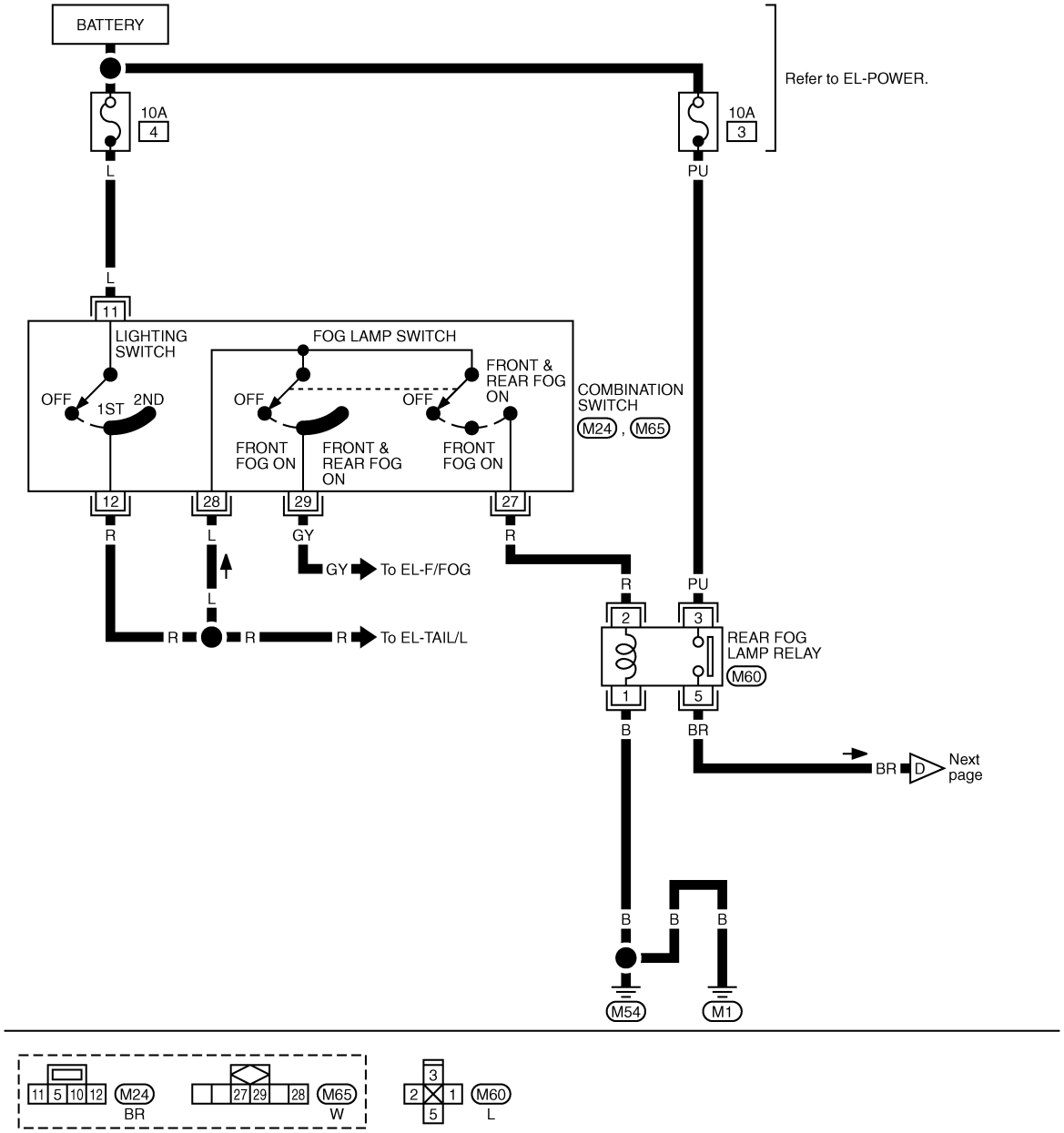

GEL257B

EL-R/FOG-08

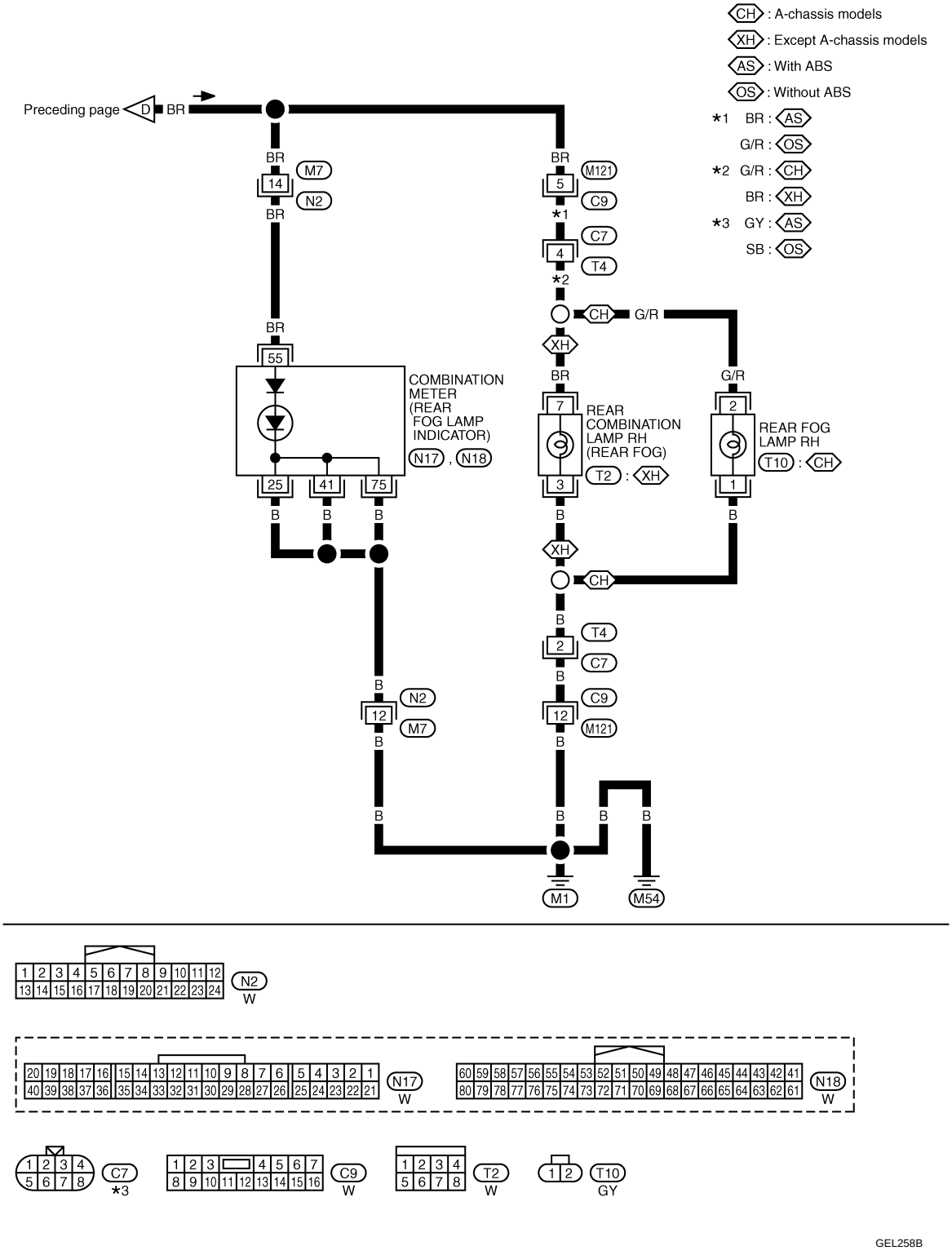
CH : A-chassis models
XH : Except A-chassis models
AS : With ABS
OS : Without ABS
*1 BR : AS
G/R : OS
*2 G/R : CH
BR : XH
*3 GY : AS
SB : OS
Preceding page
D
BR
M7
14
N2
M121
5
C9
*1
C7
4
T4
*2
CH
G/R
XH
55
COMBINATION METER (REAR FOG LAMP INDICATOR)
N17 , N18
25
41
75
7
REAR COMBINATION LAMP RH (REAR FOG)
T2 : XH
3
2
REAR FOG LAMP RH
T10 : CH
1
B
N2
12
M7
C9
M121
M1
M54
N2
W
N17
W
N18
W
C7
*3
C9
W
T2
W
T10
GY
GEL258B

PARKING, LICENSE PLATE AND TAIL LAMPS

Wiring Diagram - TAIL/L -/LHD Models

INFOID:0000000003799206

EL-TAIL/L-01

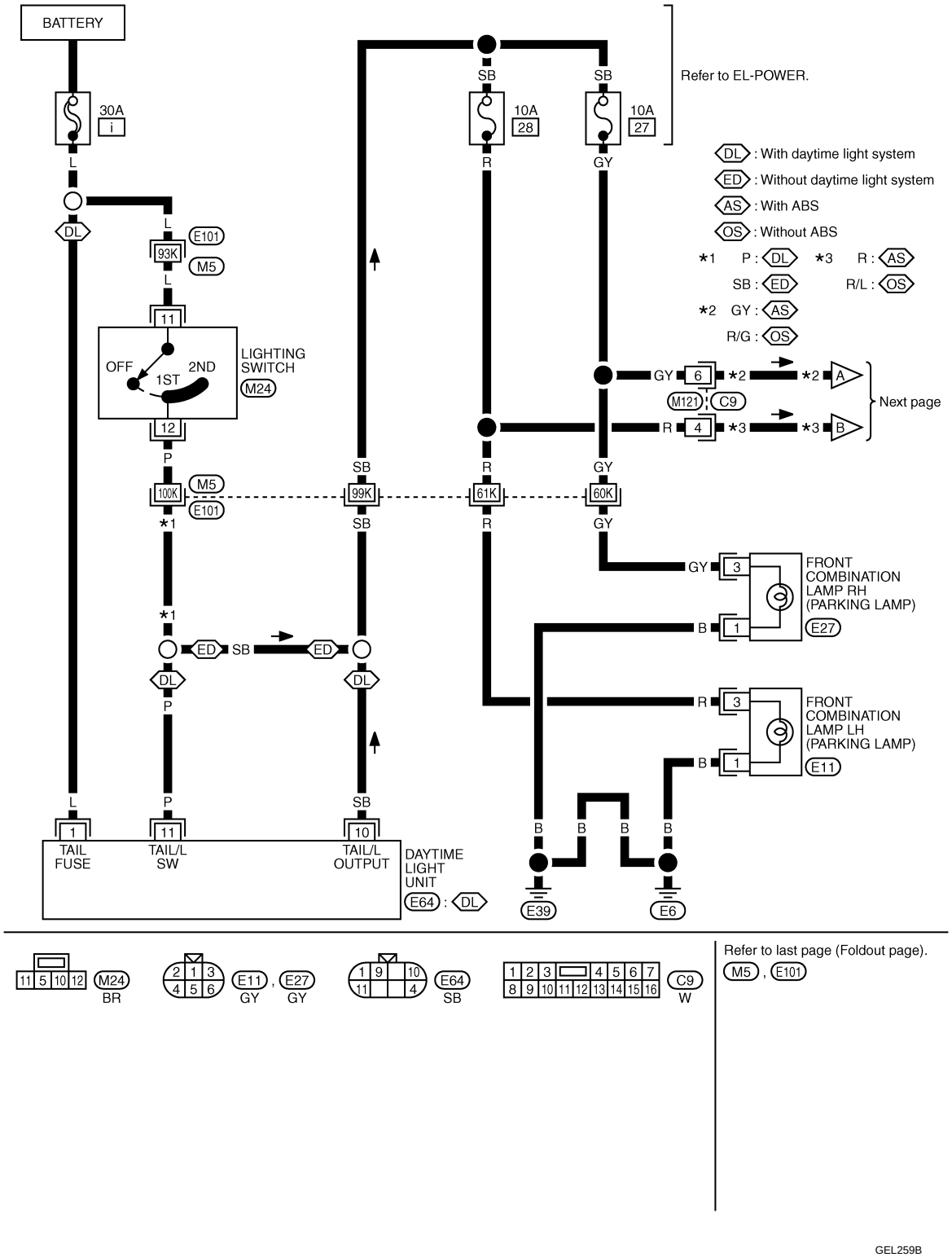

EL-TAIL/L-02

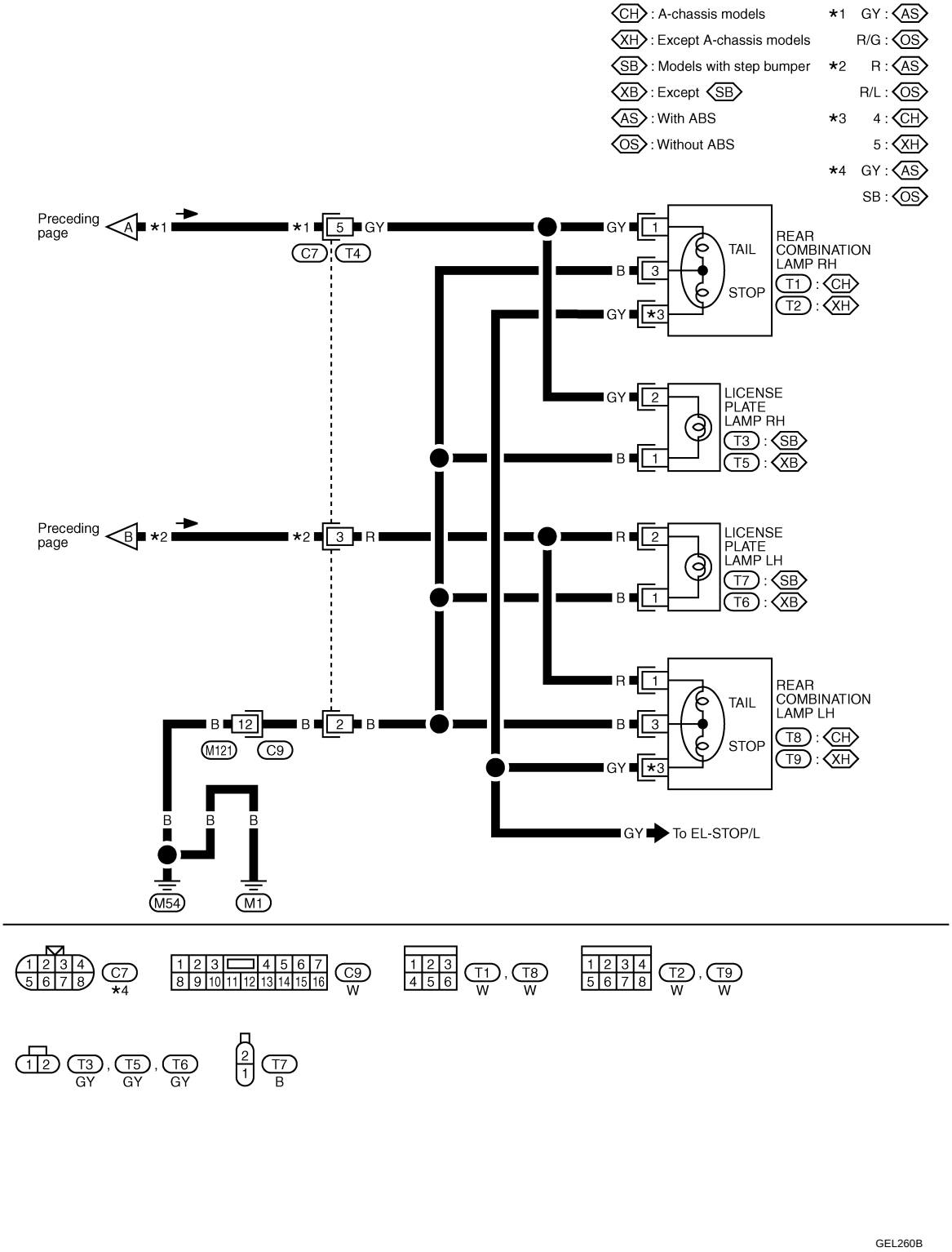
CH : A-chassis models
XH : Except A-chassis models
SB : Models with step bumper
XB : Except SB
AS : With ABS
OS : Without ABS
*1 GY : AS
R/G : OS
*2 R : AS
R/L : OS
*3 4 : CH
5 : XH
*4 GY : AS
SB : OS
Preceding page
A
*1
5
GY
C7
T4
REAR COMBINATION LAMP RH
TAIL
STOP
T1 : CH
T2 : XH
LICENSE PLATE LAMP RH
T3 : SB
T5 : XB
Preceding page
B
*2
3
R
LICENSE PLATE LAMP LH
T7 : SB
T6 : XB
12
2
M121
C9
REAR COMBINATION LAMP LH
T8 : CH
T9 : XH
To EL-STOP/L
M54
M1
C7
*4
C9
W
T1
T8
W
W
T2
T9
W
W
T3
T5
T6
GY
GY
GY
T7
B
GEL260B

Wiring Diagram - TAIL/L -/RHD Models

INFOID:0000000003792702

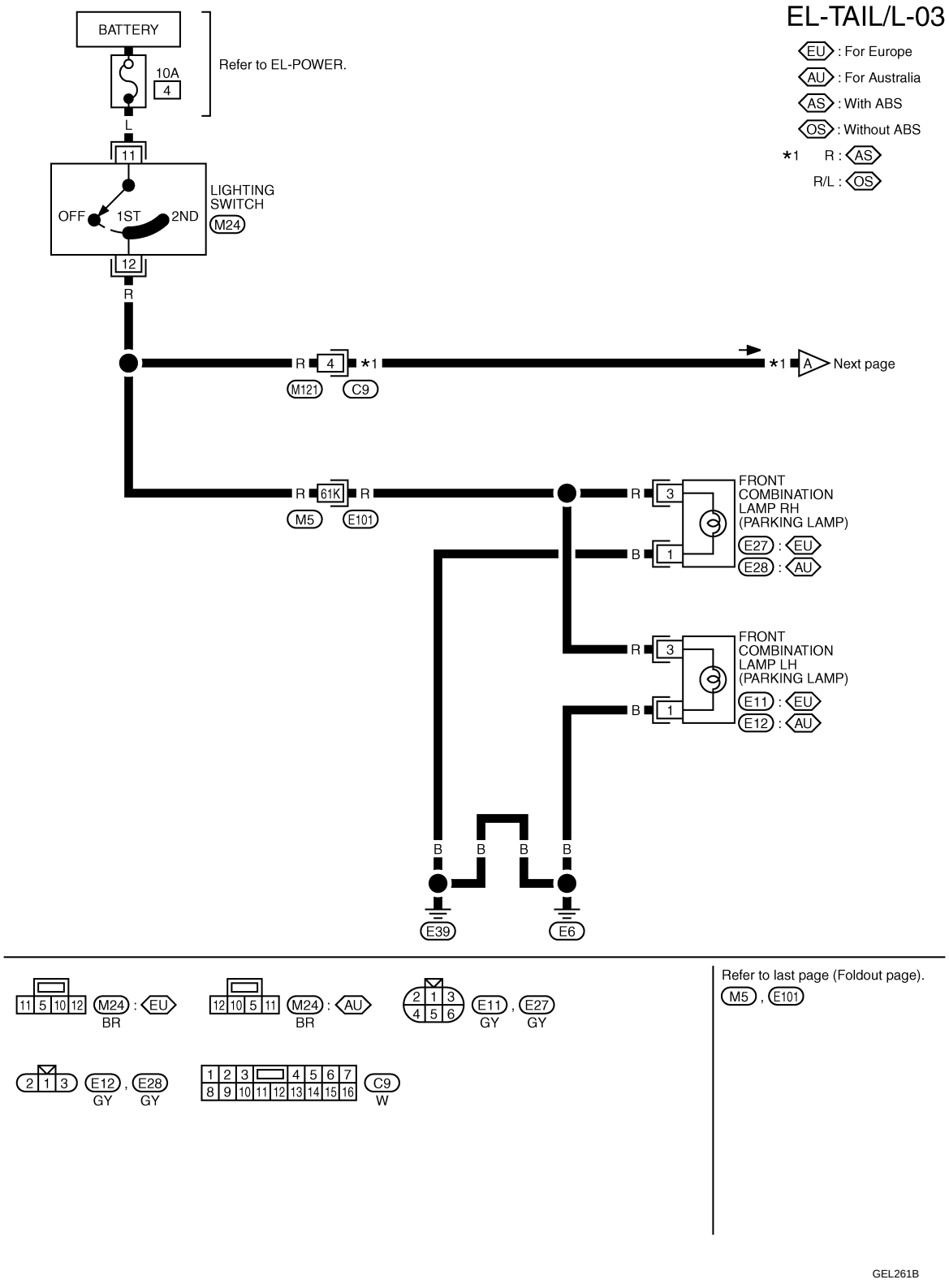

EL-TAIL/L-04

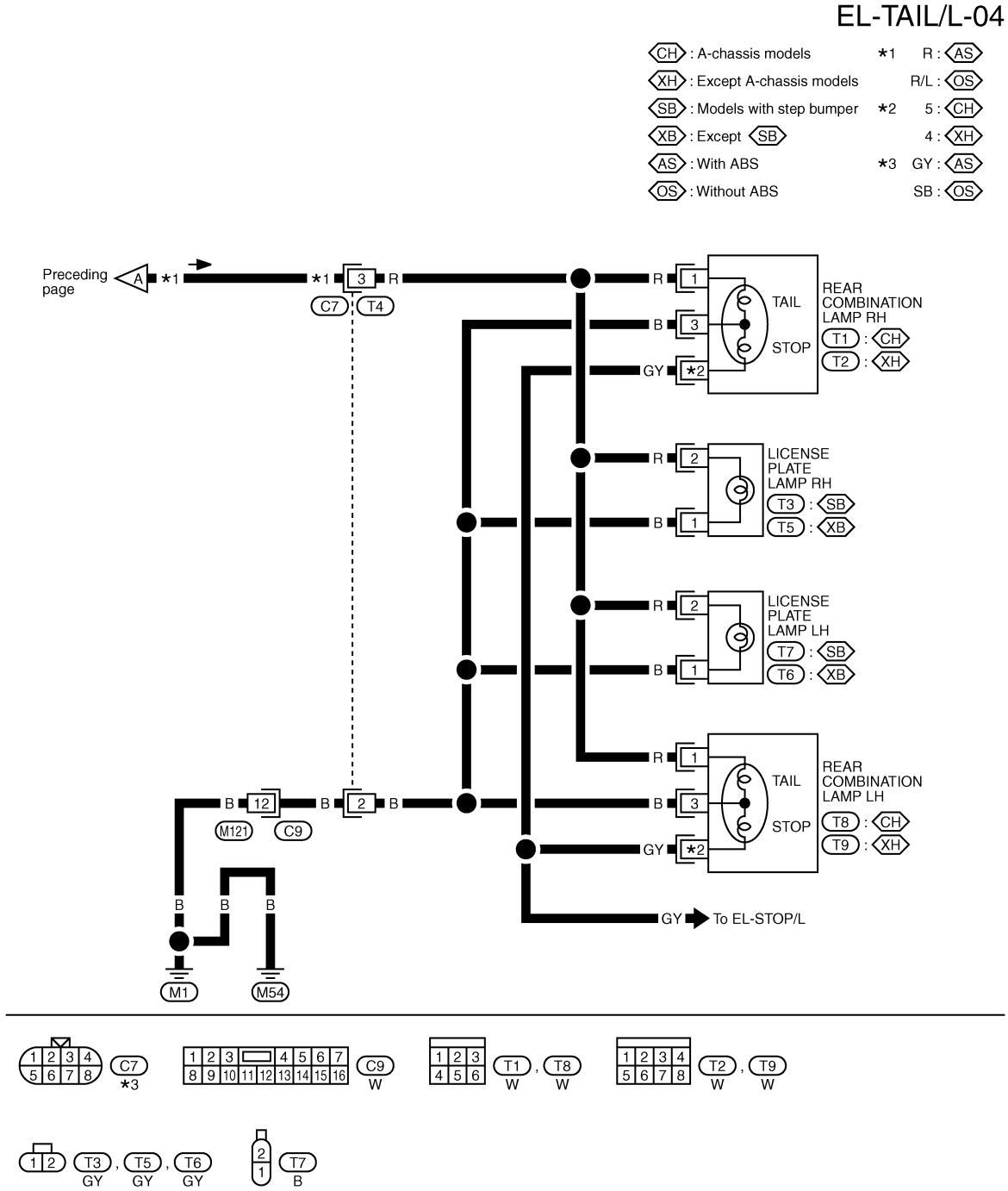
CH : A-chassis models
XH : Except A-chassis models
SB : Models with step bumper
XB : Except SB
AS : With ABS
OS : Without ABS
*1 R : AS
R/L : OS
*2 5 : CH
4 : XH
*3 GY : AS
SB : OS
Preceding page
A
*1
C7
T4
R
B
GY
TAIL
STOP
REAR COMBINATION LAMP RH
T1 : CH
T2 : XH
LICENSE PLATE LAMP RH
T3 : SB
T5 : XB
LICENSE PLATE LAMP LH
T7 : SB
T6 : XB
REAR COMBINATION LAMP LH
T8 : CH
T9 : XH
M121
C9
M1
M54
To EL-STOP/L
C7 *3
C9 W
T1 W
T8 W
T2 W
T9 W
T3 GY
T5 GY
T6 GY
T7 B
GEL262B

STOP LAMP

Wiring Diagram - STOP/L -

INFOID:0000000003792703

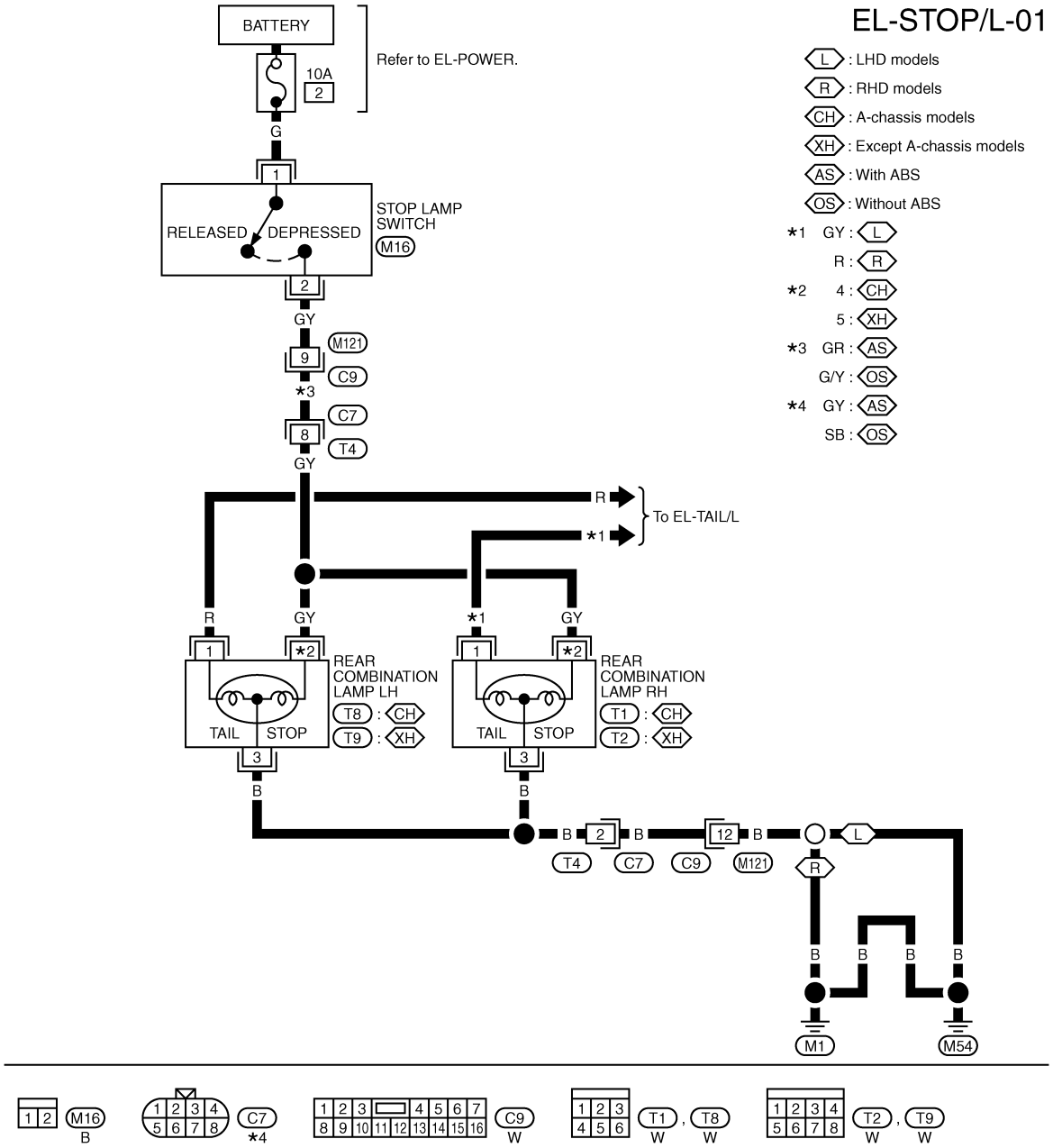

BACK-UP LAMP

Wiring Diagram - BACK/L -

INFOID:0000000003792704

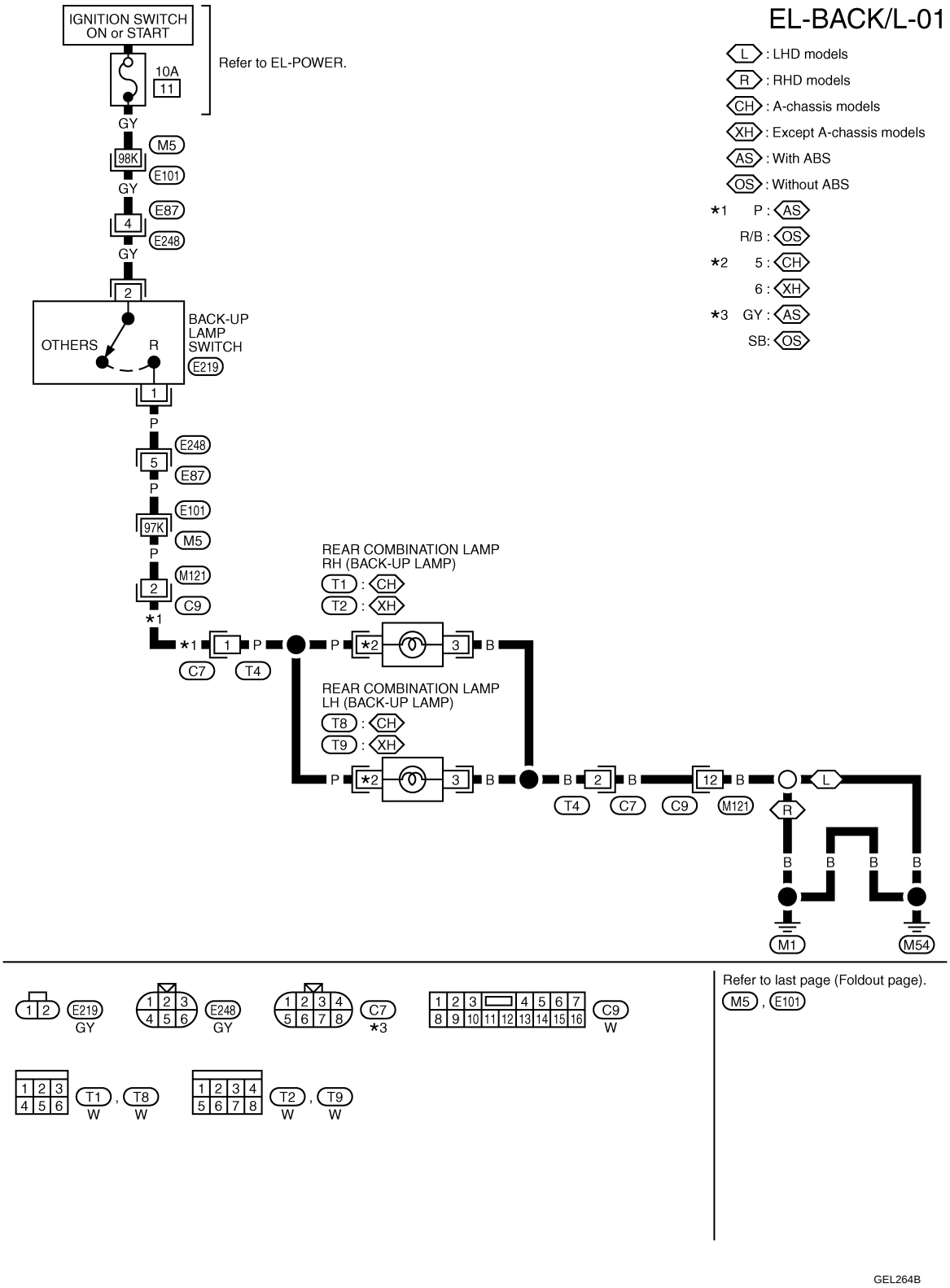

TURN SIGNAL AND HAZARD WARNING LAMPS

Wiring Diagram - TURN -

INFOID:0000000003792705

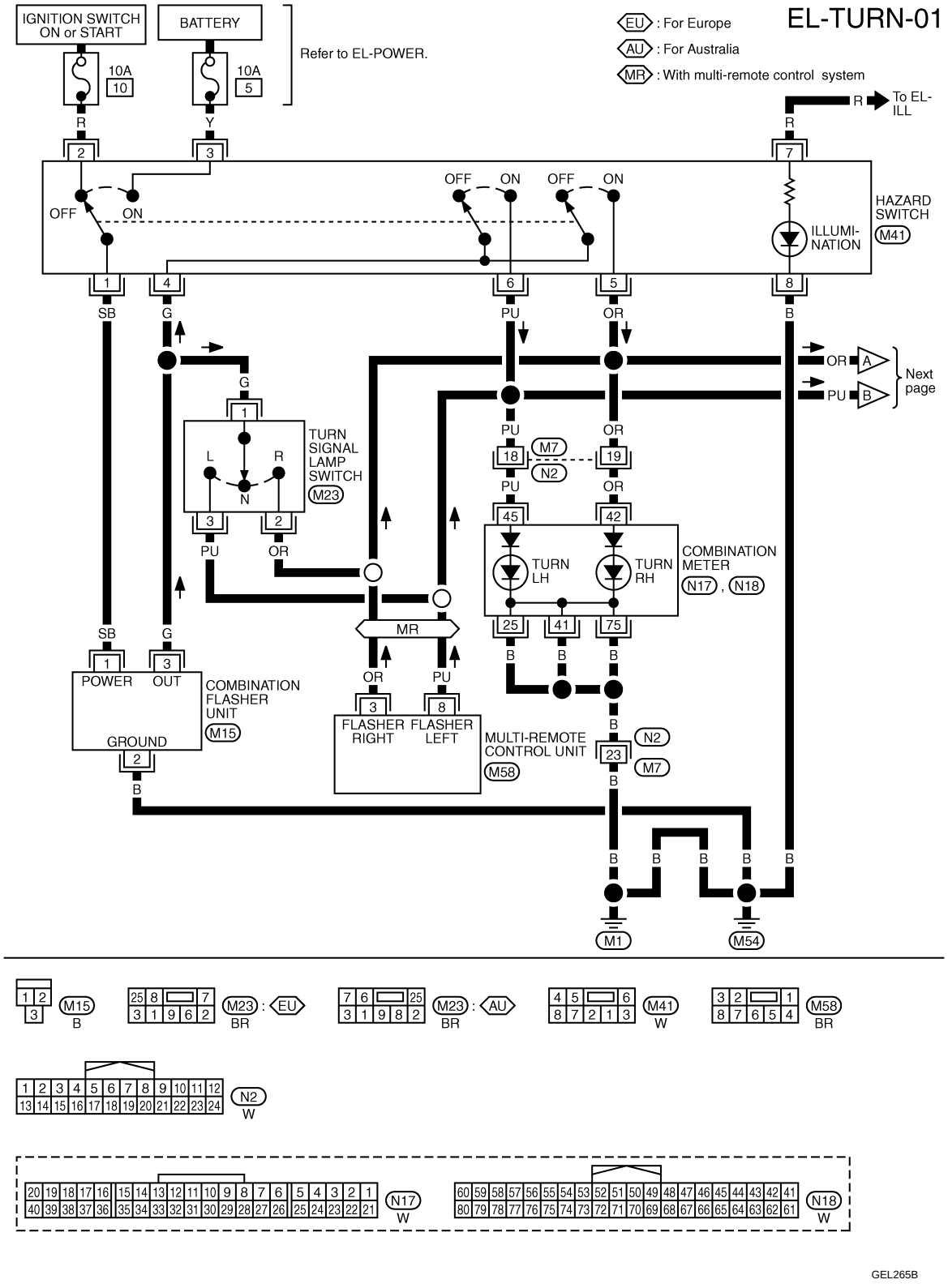

EL-TURN-02

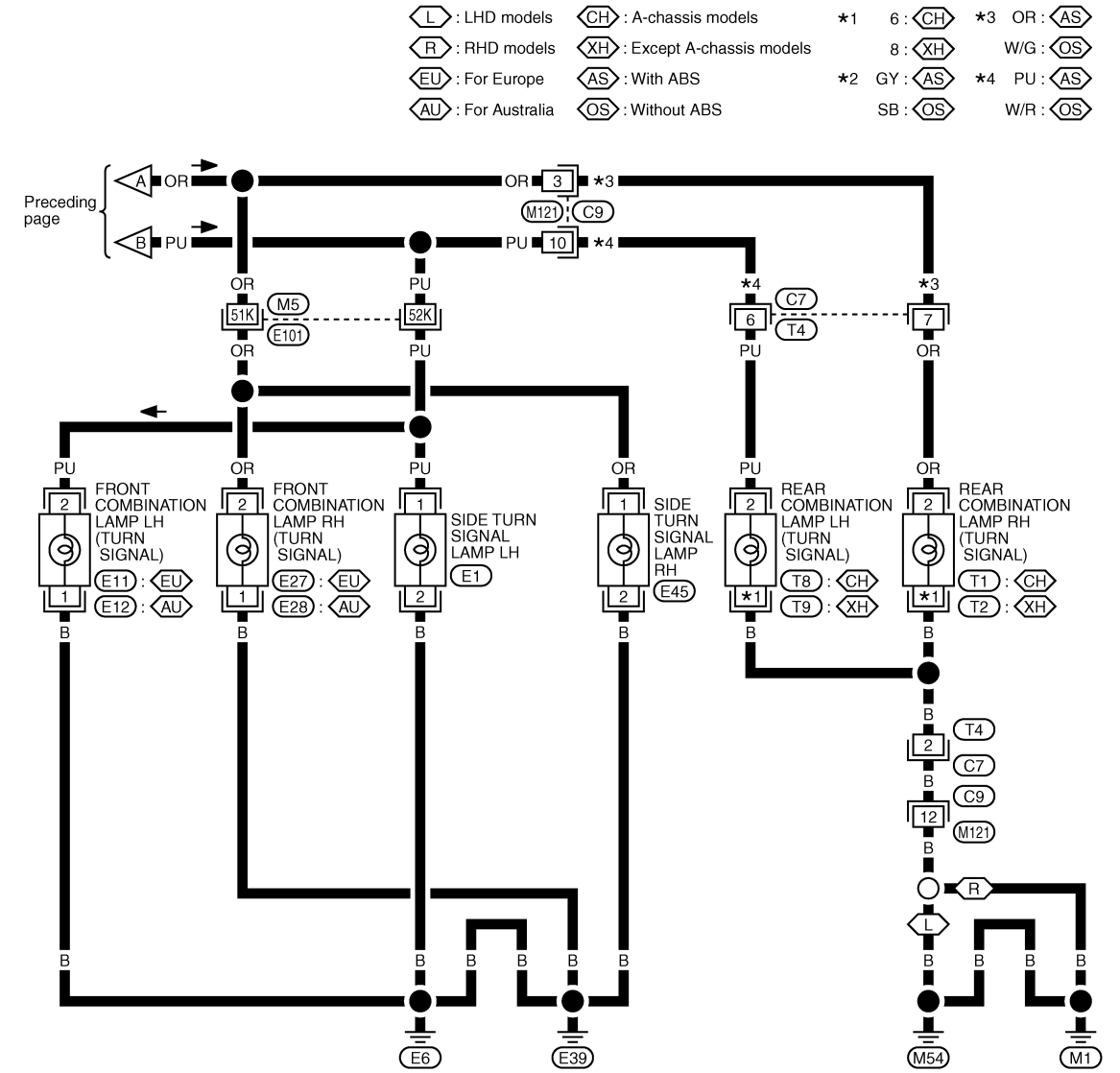

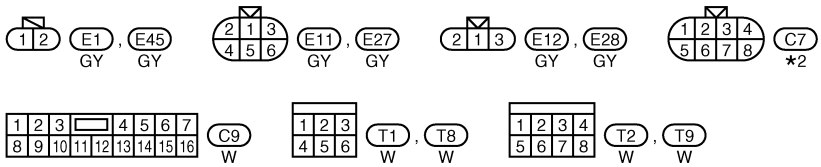

Refer to last page (Foldout page).
M5 , E101

GEL266B

INTERIOR ROOM LAMP

Wiring Diagram - ROOM/L -

INFOID:0000000003812211

EL-ROOM/L-01

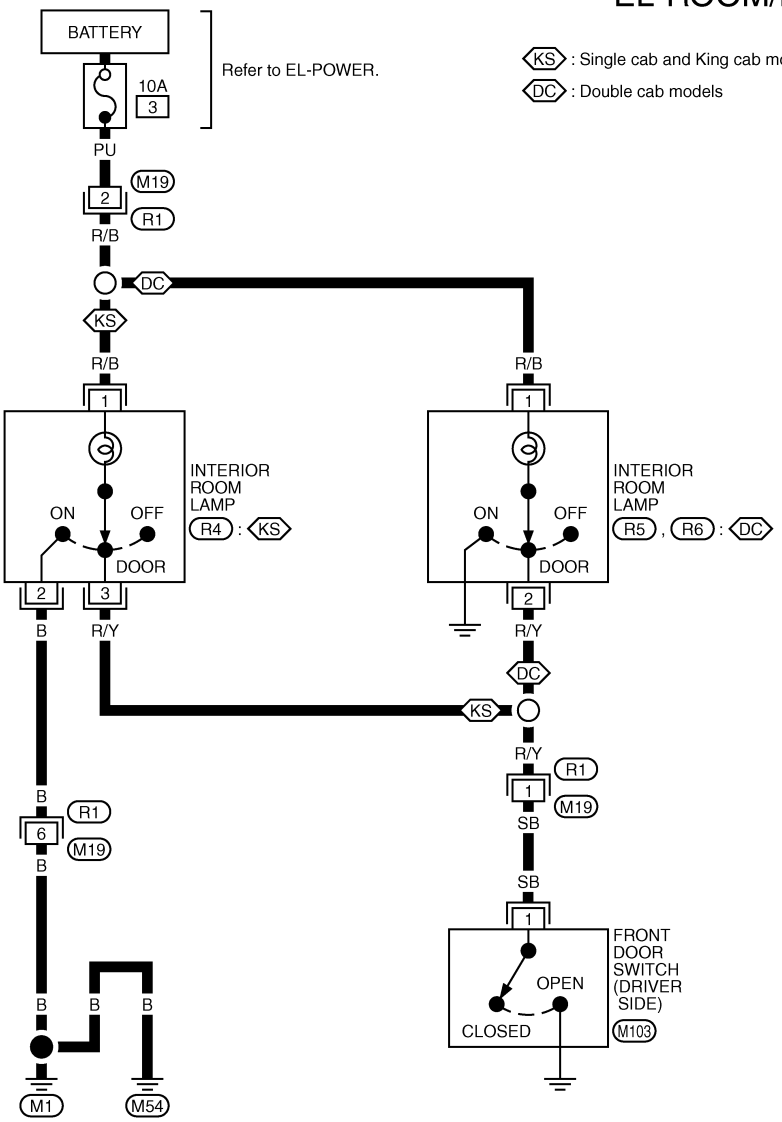

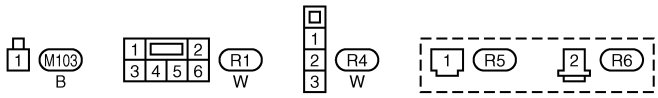

GEL267B

Wiring Diagram - SPOT LAMP -

INFOID:0000000003812210

EL-INT/L-01

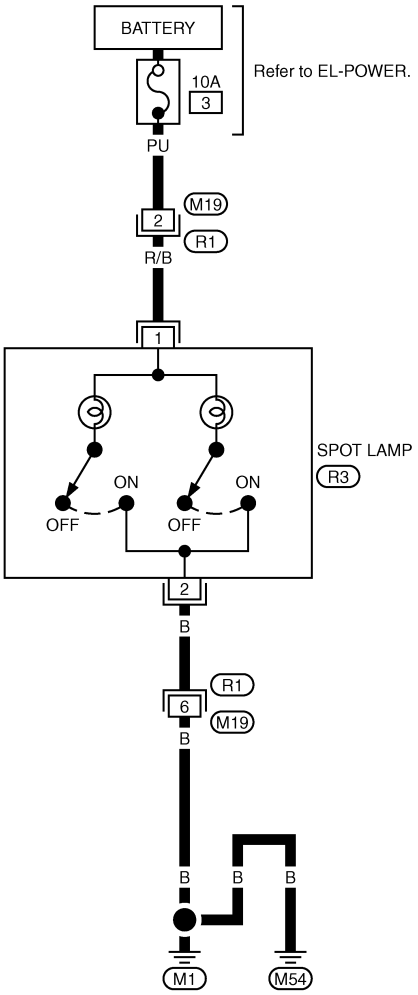

GEL268B

ILLUMINATION

Wiring Diagram - ILL -/LHD Models

INFOID:0000000003795779

EL-ILL-01

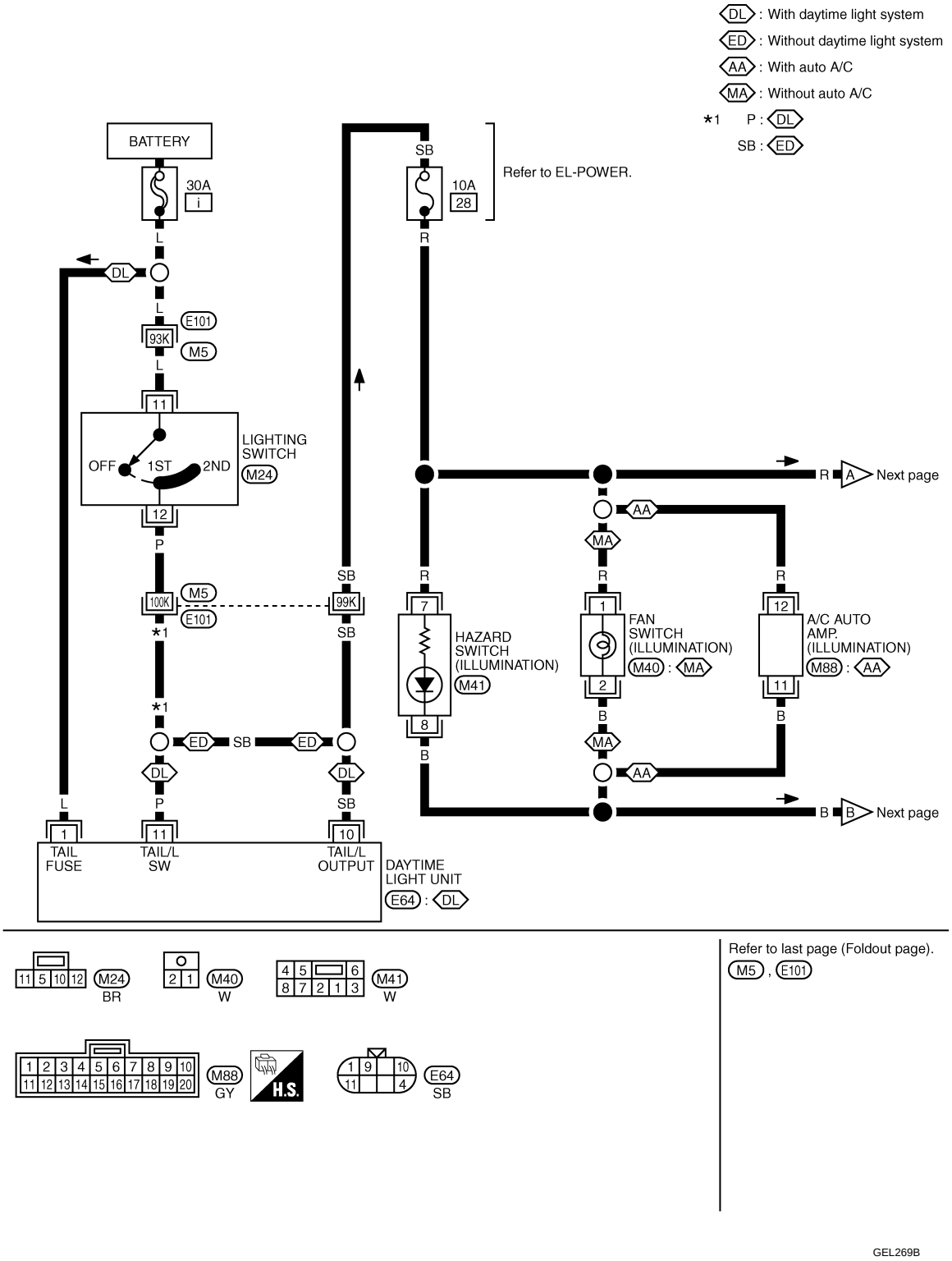

EL-ILL-02

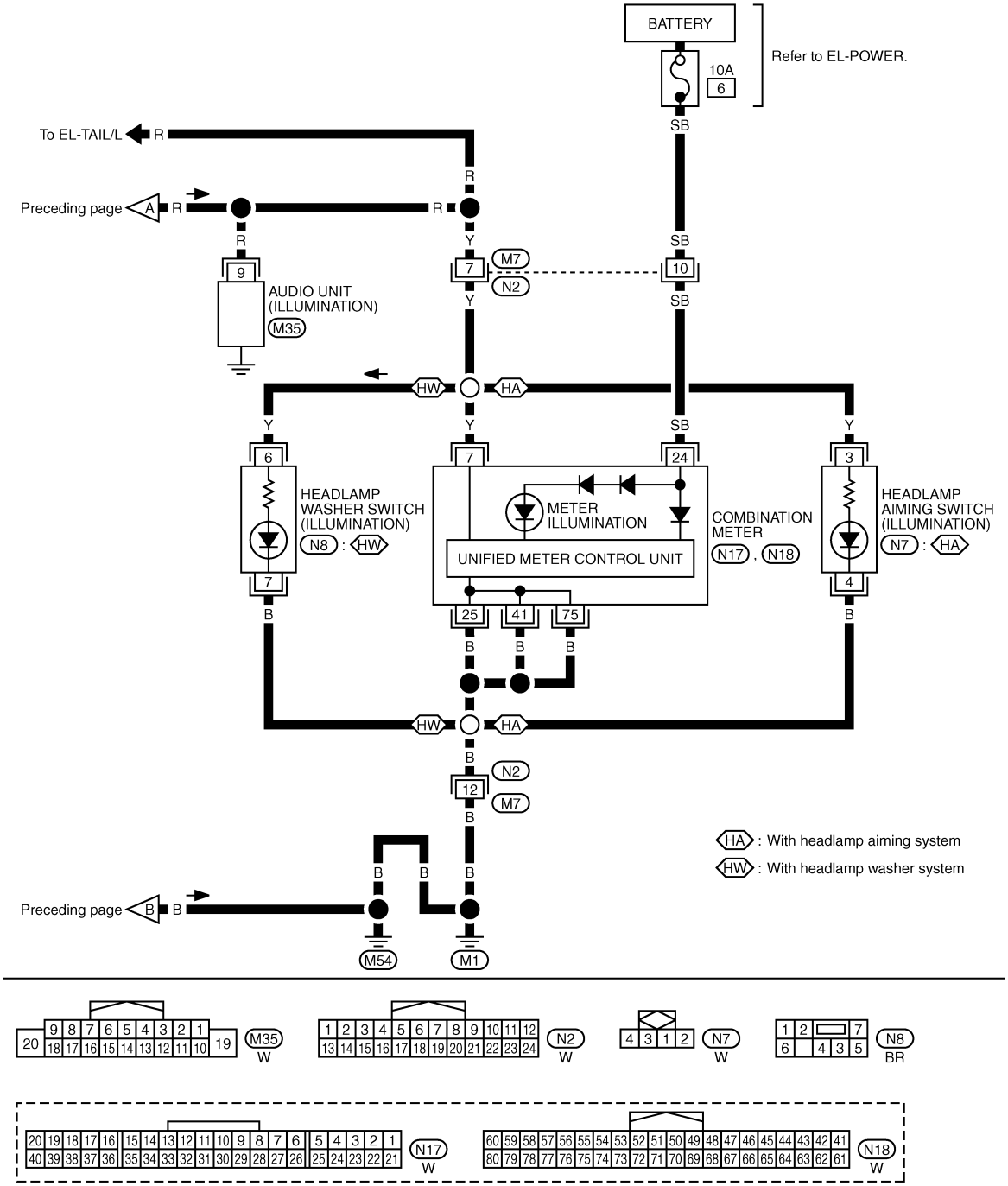

GEL270B

Wiring Diagram - ILL -/RHD Models

INFOID:0000000003792707

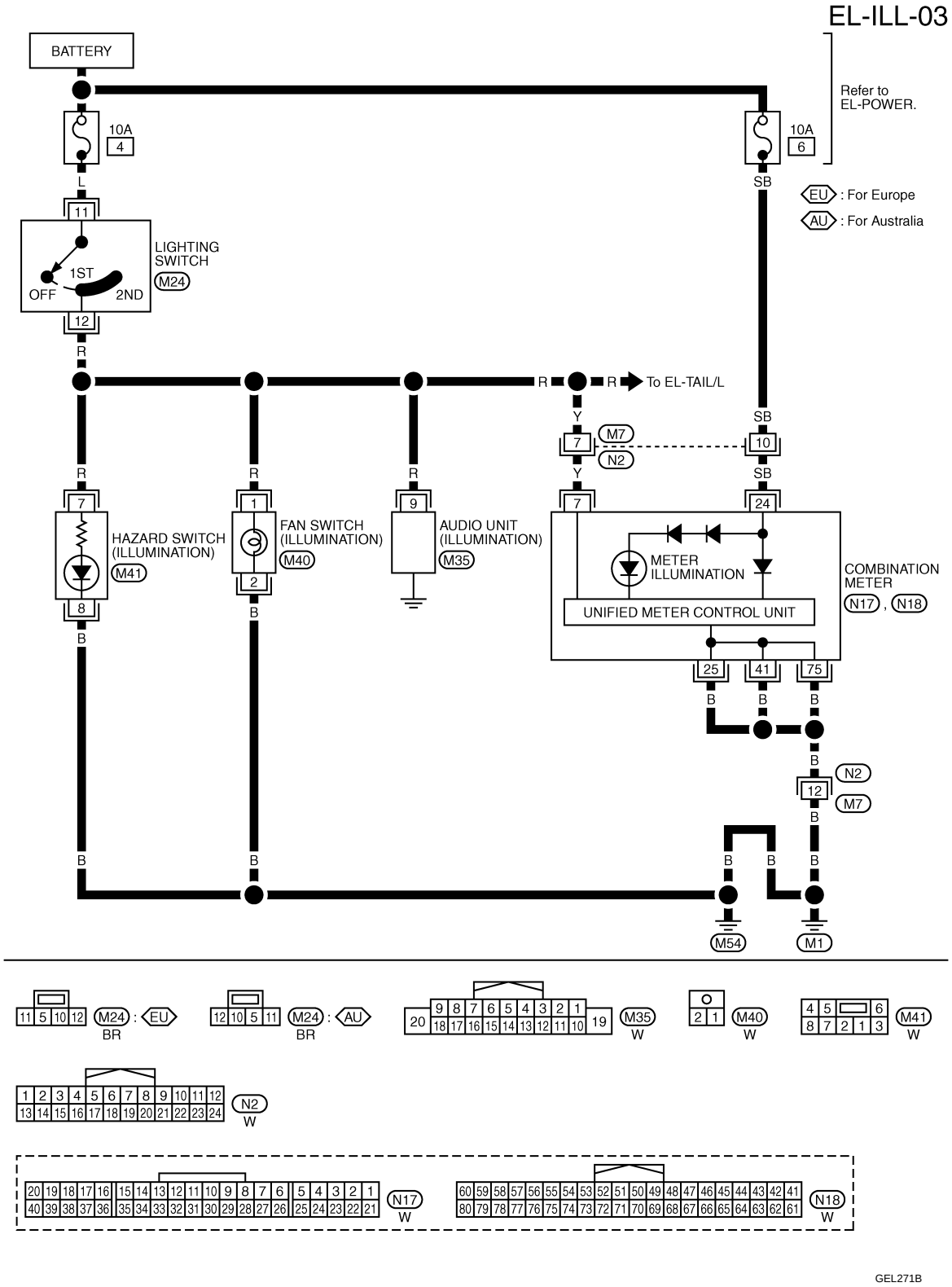

COMBINATION METERS

System Description

INFOID:0000000003715428

UNIFIED CONTROL METER

- Speedometer, odo/trip meter, tachometer, fuel gauge and water temperature gauge are controlled totally by control unit built in combination meter.
- Digital meter is adopted for odo/trip meter.*
  *The record of the odo meter is kept even if the battery cable is disconnected. The record of the trip meter is erased when the battery cable is disconnected.
- Odo/trip meter segments can be checked in self-diagnosis function.
- Meter/gauge can be checked in self-diagnosis mode.
- Clock displays the time measured in the combination meter.
- The remaining distance from the set maintenance distance is displayed.
- The combination meter displays it judged with the oil level sensor signal received from the oil level sensor.

Fail-safe

The combination meter activates the fail-safe control if CAN communication with each unit is malfunctioning.

Function	Fail-safe operation
Tachometer	Return to zero.
Water temperature gauge	
Malfunction indicator lamp	The lamp turns OFF.
Glow indicator lamp	

Arrangement of Combination Meter

INFOID:0000000003715430

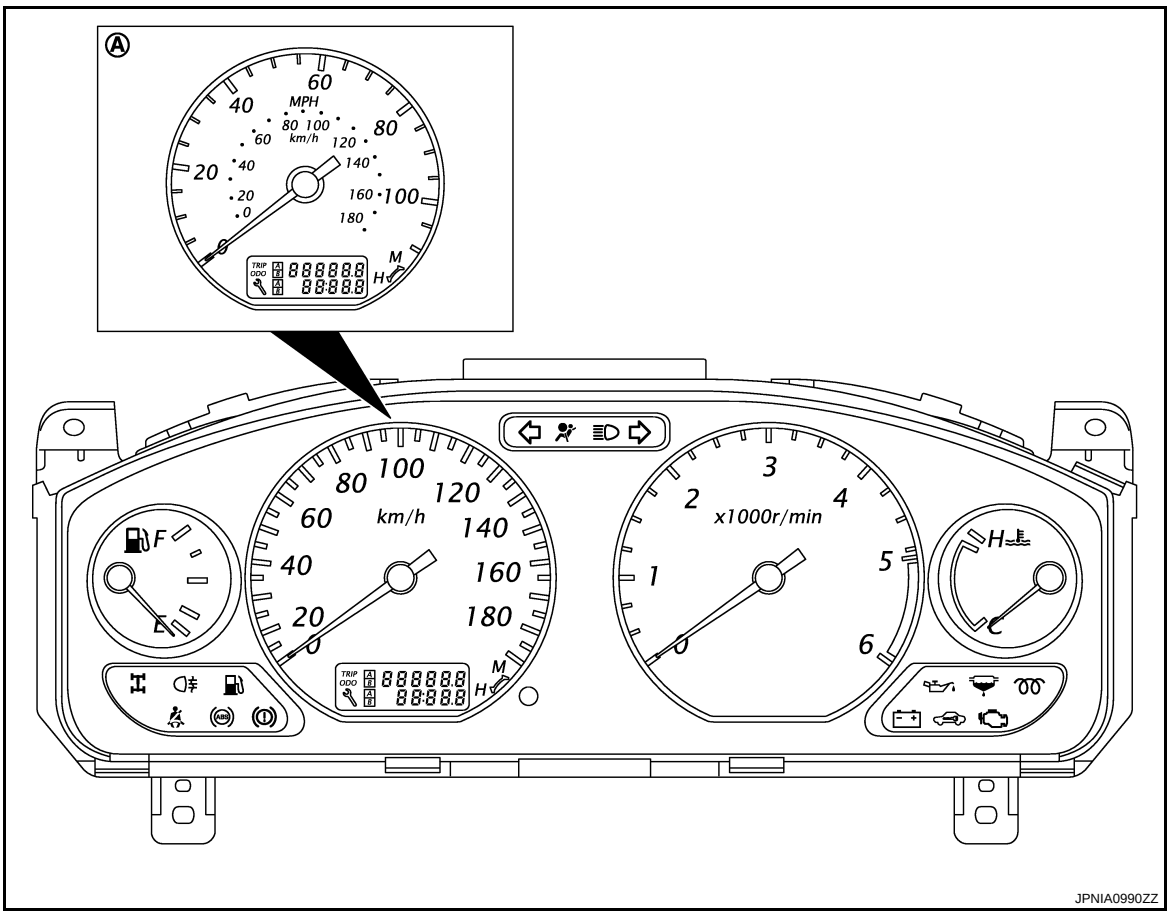

A. With MPH display

Internal Circuit

INFOID:0000000003715431

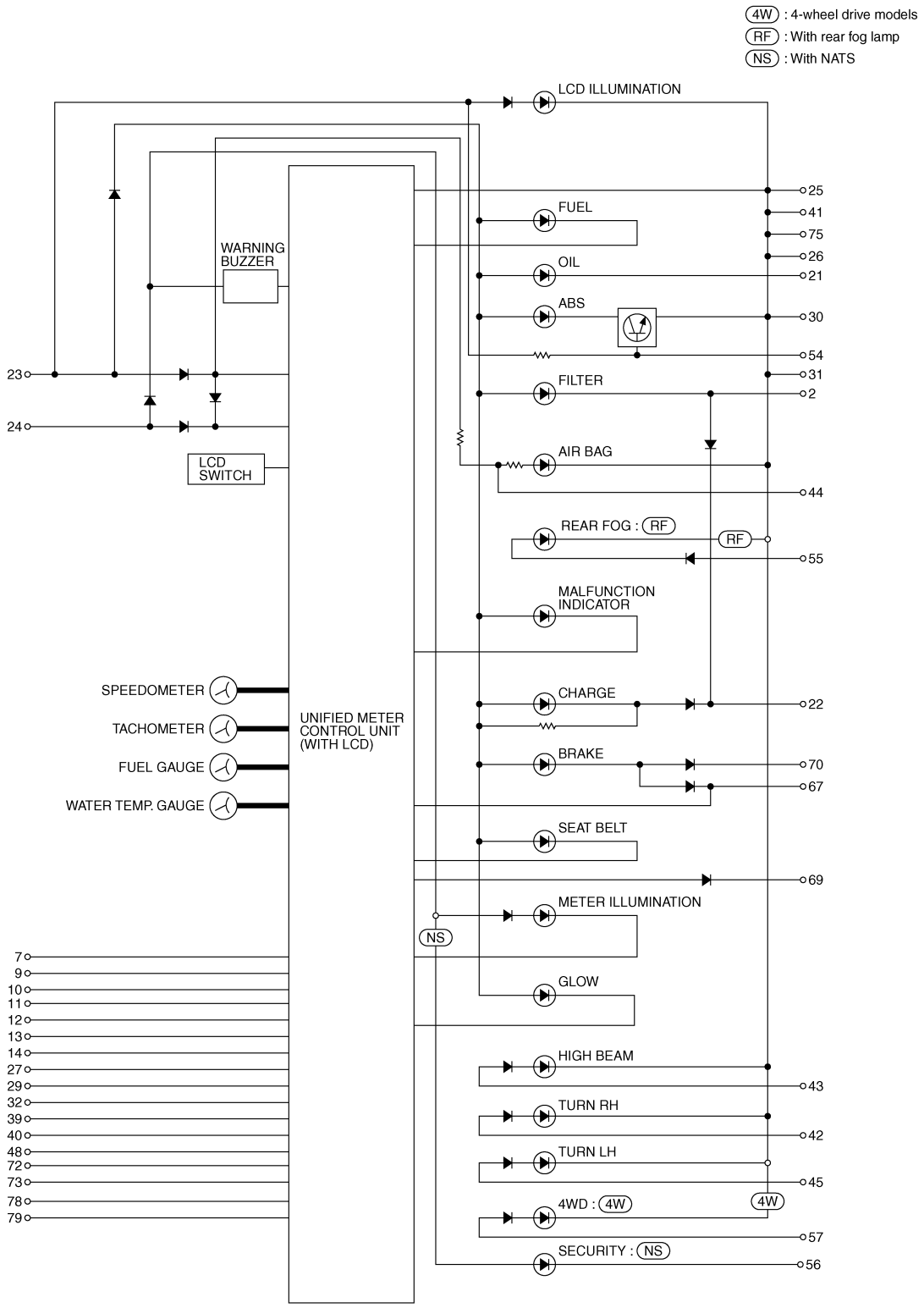

Wiring Diagram - METER -

INFOID:0000000003715432

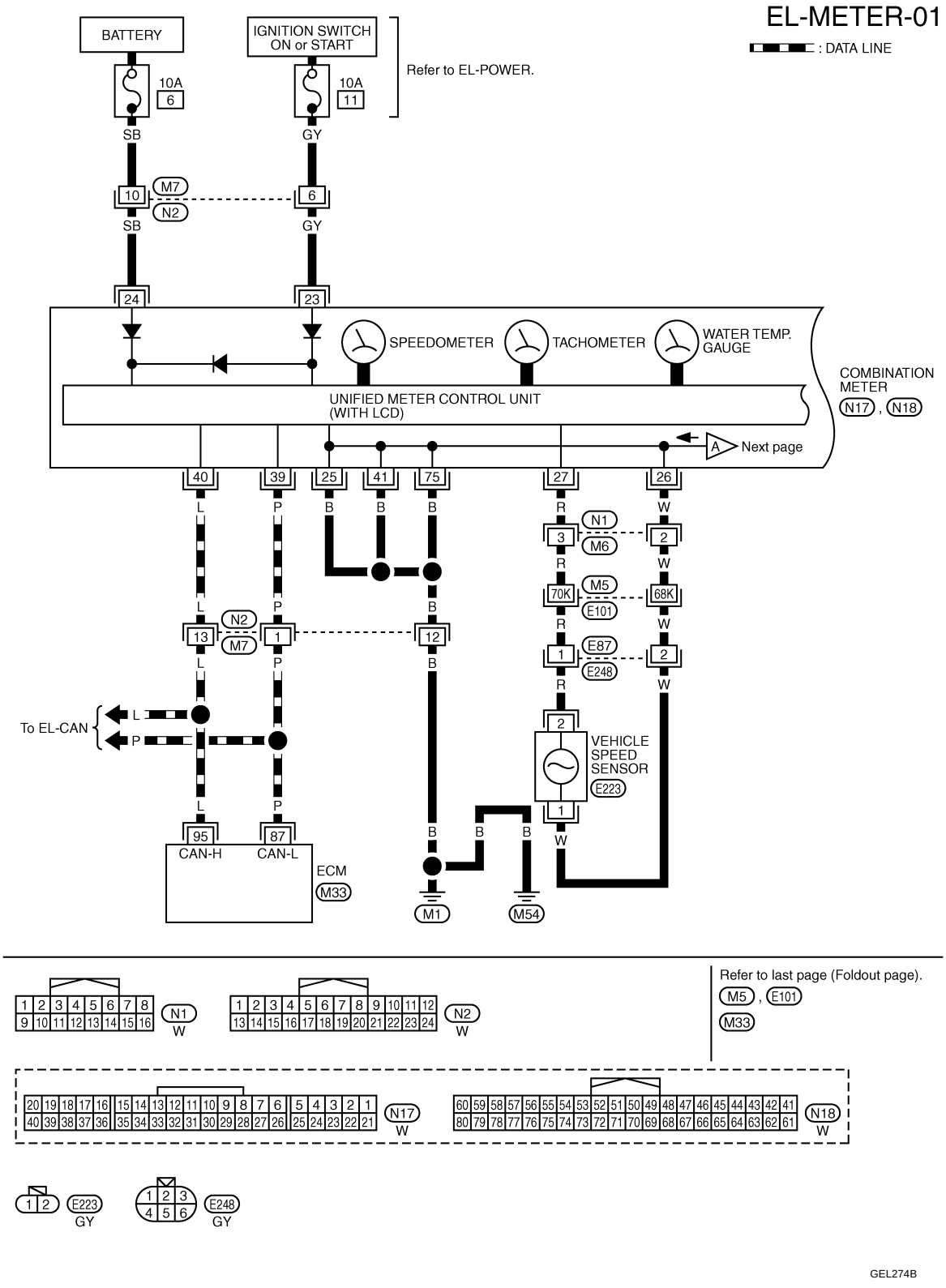

EL-METER-02

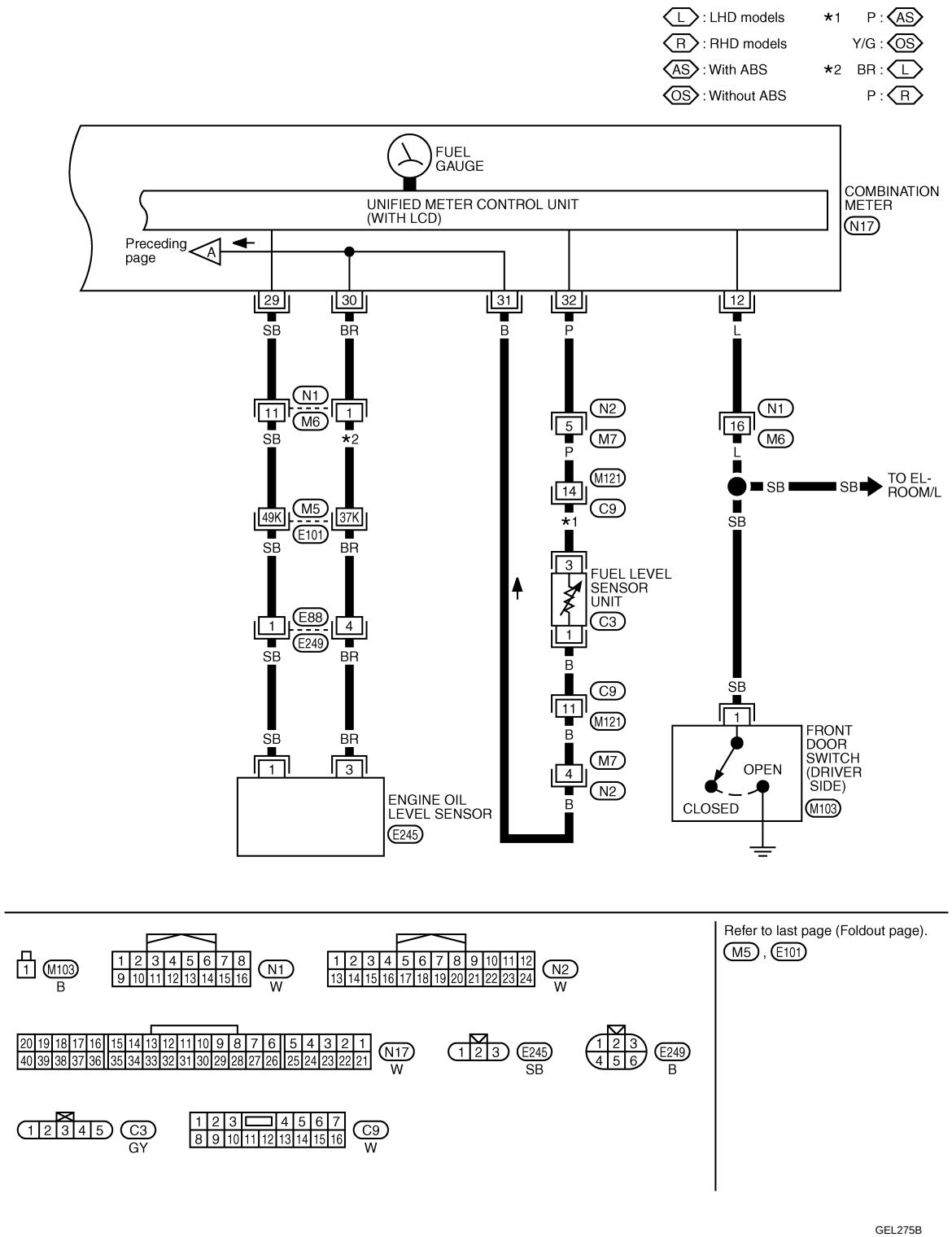

Self-Diagnosis Mode of Combination meter

INFOID:0000000003715434

SELF-DIAGNOSIS FUNCTION

- Odo/trip meter segment can be checked in self-diagnosis mode.
- Meters/gauges can be checked in self-diagnoses mode.

OPERATION PROCEDURE

1. Turn ignition switch ON, and switch the odo/trip meter to “trip A” or “trip B”.

NOTE:
If the diagnosis function is activated with the “trip A” displayed, the mileage on the “trip A” is reset to 0.0km (The same way for trip B).

2. Turn ignition switch OFF.
3. While pressing the odo/trip meter switch, turn ignition switch ON again.
4. Make sure that the trip meter displays “0000.0”.
5. Press the odo/trip meter switch at least 3 times (within 7 seconds after the ignition switch is turned ON).
6. All the segments on the odo/trip meter illuminate, and simultaneously the low-fuel warning lamp indicator illuminate. At this time, the unified control meter is turned to diagnosis mode.
   NOTE:
   If any of the segments is not displayed, replace the odo/trip meter with the speedometer assembly.

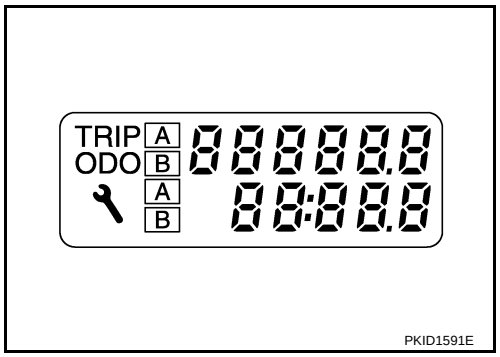

7. Each meter activates during pressing odo/trip switch. (At this time, the low-fuel warning lamp goes off).

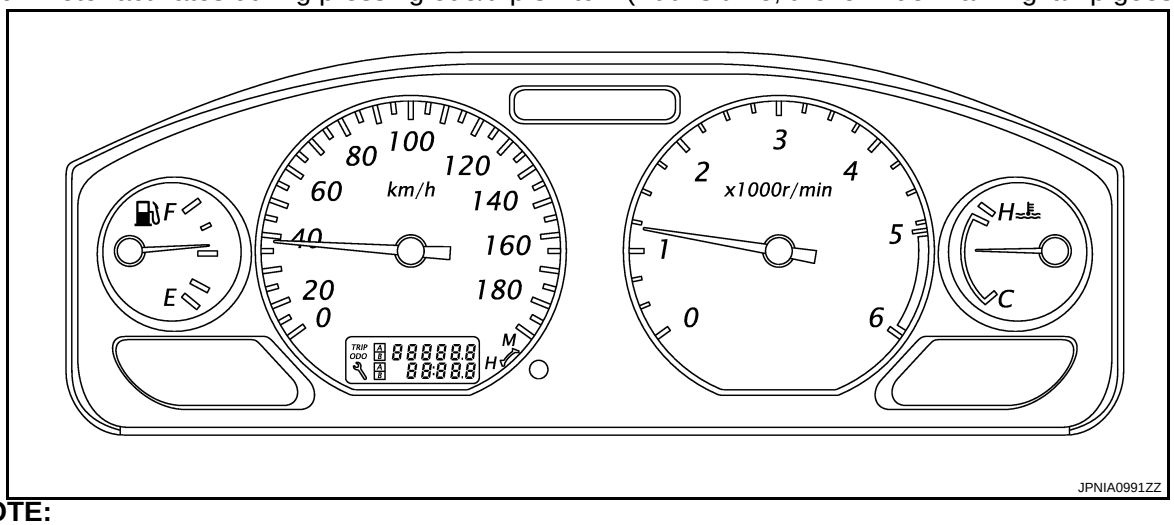

NOTE:
- The figure is reference.
- Check combination meter power supply and ground circuit, when self-diagnosis mode of combination meter does not start. Replace combination meter if they are normal.

SYMPTOM CHART

INFOID:0000000003715435

Symptom	Check items
Fuel warning lamp is malfunctioning.	• Perform EL-58, "Fuel Level Sensor Signal Inspection". Replace unified meter control unit, found normal function in the above inspection.
Fuel gauge indication is malfunction.	
Tachometer indication is malfunction.	• Perform EL-57, "Engine Speed Signal Inspection". Replace unified meter control unit, found normal function in the above inspection.
Water temperature indication is malfunction.	• Perform EL-58, "Engine Coolant Temperature Signal Inspection". Replace unified meter control unit, found normal function in the above inspection.

Symptom	Check items
Speedometer and odo/trip meter is malfunctioning.	• Perform EL-56, "Vehicle Speed Signal Inspection". Replace unified meter control unit, found normal function in the above inspection.
Oil level indication is malfunctioning.	Perform the following inspections • Oil level sensor circuit EL-59, "Oil Level Sensor Signal Inspection" • Door switch (driver side) circuit • Door switch (driver side) Replace unified meter control unit, found normal function in the above inspection.

Power Supply and Ground Circuit Inspection

INFOID:0000000003718534

1.CHECK FUSE

Check for blown combination meter fuses.

Power source	Fuse No.
Battery power supply	6
Ignition power supply	11

OK or NG

OK >> GO TO 2.
NG >> Be sure to eliminate cause of malfunction before installing new fuse.

2.CHECK POWER SUPPLY CIRCUIT

Check voltage between combination meter harness connector and ground.

Terminals	Signal name	Ignition switch position	Value (Approx.)
24	Battery power supply	OFF	Battery voltage
23	Ignition power supply	ON	Battery voltage

OK or NG

OK >> GO TO 3.
NG >> Repair harness or connector.

3.CHECK GROUND CIRCUIT

1. Turn ignition switch OFF.
2. Disconnect combination meter connector.
3. Check continuity between combination meter harness connector and ground.

Combination meter			Continuity
Connector	Terminal	Ground	
N17	25		Existed
N18	41		
	75		

OK or NG

OK >> INSPECTION END
NG >> Repair harness or connector.

Vehicle Speed Signal Inspection

INFOID:0000000003718535

1.CHECK COMBINATION METER INPUT SIGNAL

1. Start the engine.
2. Check the waveform between the combination meter harness connector terminals.

Combination meter			Condition	Reference value
Connector	Terminal			
N17	27	26	When vehicle speed is approx. 20 km/h (12.5 MPH) When vehicle speed is approx. 40 km/h (25 MPH) When vehicle speed is approx. 60 km/h (37.5 MPH)	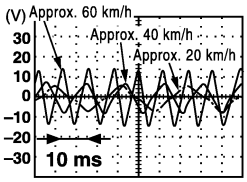 PKIA0501E

Is the inspection result normal?

YES >> INSPECTION END
NO >> GO TO 2.

2. CHECK CONNECTOR

1. Turn the ignition switch OFF.
2. Check the terminals and connectors of the combination meter and vehicle speed sensor for damage, bend, and loose connection (unit side and connector side).

Is the inspection result normal?

YES >> GO TO 3.
NO >> Repair the terminal or connector.

3. CHECK VEHICLE SPEED SENSOR SIGNAL CIRCUIT

1. Disconnect combination meter harness connector and vehicle speed sensor connector.
2. Check continuity between combination meter harness connector and vehicle speed sensor harness connector.

Combination meter		Vehicle speed sensor		Continuity
Connector	Terminal	Connector	Terminal	
N17	27	E223	2	Existed
	26		1	Existed

3. Check continuity between combination meter harness connector and ground.

Combination meter		Ground	Continuity
Connector	Terminal		
N17	27		Not existed
	26		Not existed

Is the inspection result normal?

YES >> GO TO 4.
NO >> Repair the harness or connector.

4. CHECK VEHICLE SPEED SENSOR

1. Check vehicle speed sensor. Refer to EL-59, "Electrical Component Inspection".

Is the inspection result normal?

YES >> INSPECTION END
NO >> Replace the vehicle speed sensor.

Engine Speed Signal Inspection

INFOID:0000000003718536

1. PERFORM SELF-DIAGNOSIS OF ECM

Perform “Self Diagnostic Result” of ECM. Refer to EC-63, "CONSULT-III Function (ENGINE)".

Self-diagnosis results

No malfunction detected >> INSPECTION END

Malfunction detected >> Repair or replace malfunctioning parts.

Engine Coolant Temperature Signal Inspection

INFOID:0000000003718537

1. PERFORM SELF-DIAGNOSIS OF ECM

Perform “Self Diagnostic Result” of ECM. Refer to EC-63, "CONSULT-III Function (ENGINE)".

Self-diagnosis results

No malfunction detected >> INSPECTION END
Malfunction detected >> Repair or replace malfunctioning parts.

Fuel Level Sensor Signal Inspection

INFOID:0000000003718538

NOTE:
The following symptoms are not malfunction.
Fuel gauge
- Depending on vehicle position or driving circumstances, the fuel in the tank varies, and the pointer may fluctuate.

Low-fuel warning lamp
- Depending on vehicle position or driving circumstances, the fuel in the tank varies, and the warning lamp ON timing may change.

1. CHECK CONNECTOR

Check combination meter and fuel level sensor unit terminals (combination meter side, unit side, harness side) for looseness or bent terminals.

Is the inspection result normal?

YES >> GO TO 2.
NO >> Repair terminal or connector.

2. CHECK COMBINATION METER CIRCUIT

1. Turn ignition switch OFF.
2. Disconnect combination meter connector and fuel level sensor unit connector.
3. Check continuity between combination meter harness connector and fuel level sensor unit harness connector.

Combination meter		Fuel level sensor unit		Continuity
Connector	Terminal	Connector	Terminal	
N17	32	C3	3	Existed

4. Check continuity between combination meter harness connector and ground.

Combination meter		Ground	Continuity
Connector	Terminal		
N17	32		Not existed

Is the inspection result normal?

YES >> GO TO 3.
NO >> Repair harness or connector.

3. CHECK FUEL LEVEL SENSOR GROUND CIRCUIT

Check continuity between fuel level sensor unit harness connector and combination meter harness connector.

Fuel level sensor unit		Combination meter		Continuity
Connector	Terminal	Connector	Terminal	
C3	1	N17	31	Existed

Is the inspection result normal?

YES >> GO TO 4.
NO >> Repair harness or connector.

4. CHECK FUEL LEVEL SENSOR

Check fuel level sensor units. Refer to EL-59, "Electrical Component Inspection".

Is the inspection result normal?

YES >> GO TO 5
NO >> Replace fuel level sensor unit.

5. CHECK INSTALLATION CONDITION

Check fuel level sensor unit installation, and check whether the float arm interferes or binds with any of the internal components in the fuel tank.

Is the inspection result normal?

YES >> INSPECTION END
NO >> Install the fuel level sensor unit properly.

Oil Level Sensor Signal Inspection

INFOID:0000000003761713

1. CHECK OIL LEVEL SENSOR SIGNAL CIRCUIT

1. Turn ignition switch OFF.
2. Disconnect combination meter connector and oil level sensor connector.
3. Check continuity between combination meter harness connector and oil level sensor harness connector.

Combination meter		Oil level sensor		Continuity
Connector	Terminal	Connector	Terminal	
N17	29	E245	1	Existed

4. Check continuity between combination meter harness connector and ground.

Combination meter		Ground	Continuity
Connector	Terminal		
N17	29		Not existed

Is the inspection result normal?

YES >> GO TO 2.
NO >> Repair terminal or connector.

2. CHECK OIL LEVEL SENSOR GROUND CIRCUIT

Check continuity between oil level sensor harness connector and combination meter harness connector.

Oil level sensor		Combination meter		Continuity
Connector	Terminal	Connector	Terminal	
E245	3	N17	30	Existed

Is the inspection result normal?

YES >> GO TO 3.
NO >> Repair harness or connector.

3. CHECK OIL LEVEL SENSOR

Check oil level sensor. Refer to EL-59, "Electrical Component Inspection".

Is the inspection result normal?

YES >> INSPECTION END
NO >> Replace oil level sensor.

Electrical Component Inspection

INFOID:0000000003715436

FUEL LEVEL SENSOR UNIT

- Check the resistance between terminals 3 and 1.

Measurement terminal		Float position [mm (in)]		Resistance value (Ω)
3	1	Full (A)	Approx. 82 (3.23)	Approx. 6.0
		1/2 (B)	Approx. 195 (7.68)	Approx. 33.0
		Empty (C)	Approx. 299 (11.77)	Approx. 80.0

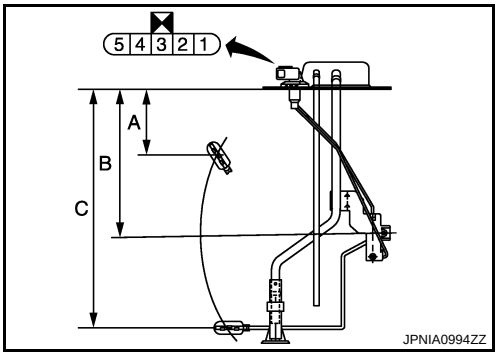

VEHICLE SPEED SENSOR

- Remove vehicle speed sensor from transmission.
- Check the voltage and resistance between vehicle speed sensor terminals 1 and 2.

Measurement terminal		Condition	Voltage (V)	Resistance value (Ω)
1	2	Rotate vehicle speed sensor	Approx. 0 - 5	—
		—	—	Approx. 250 - 330

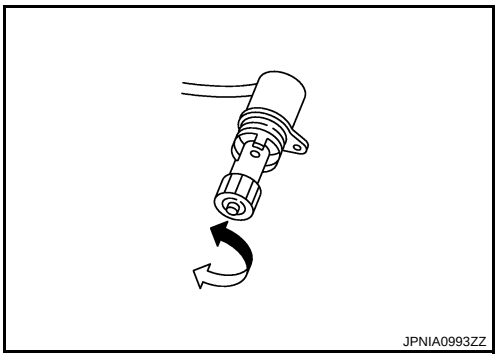

OIL LEVEL SENSOR

Check the resistance between oil level sensor terminals 1 and 3.

Terminal		Resistance (Ω)
1	3	3 - 20

Disassembly and Assembly of Combination Meter

INFOID:0000000003715437

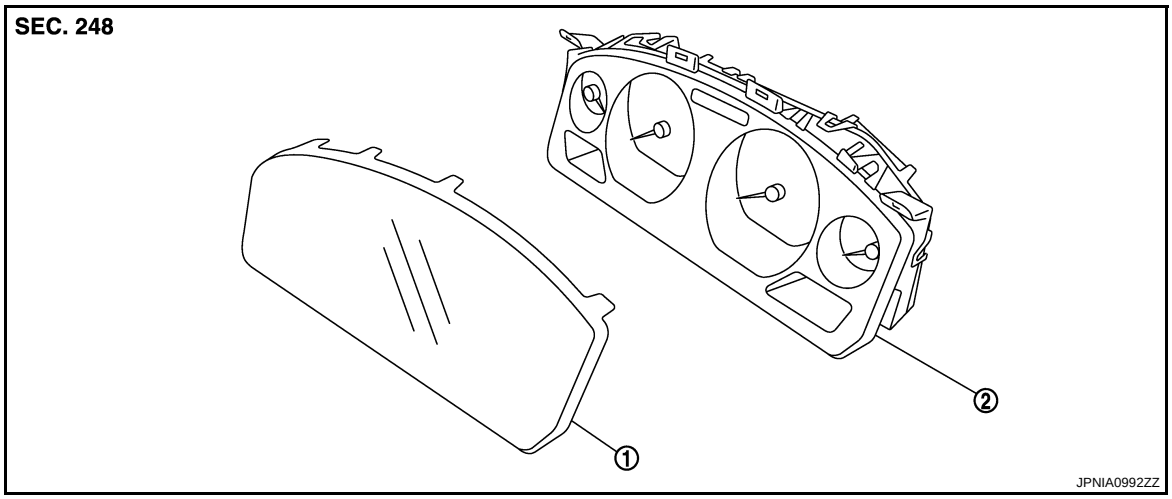

1. Front cover
2. Unified meter control unit

WARNING LAMPS

Schematic

INFOID:0000000003715444

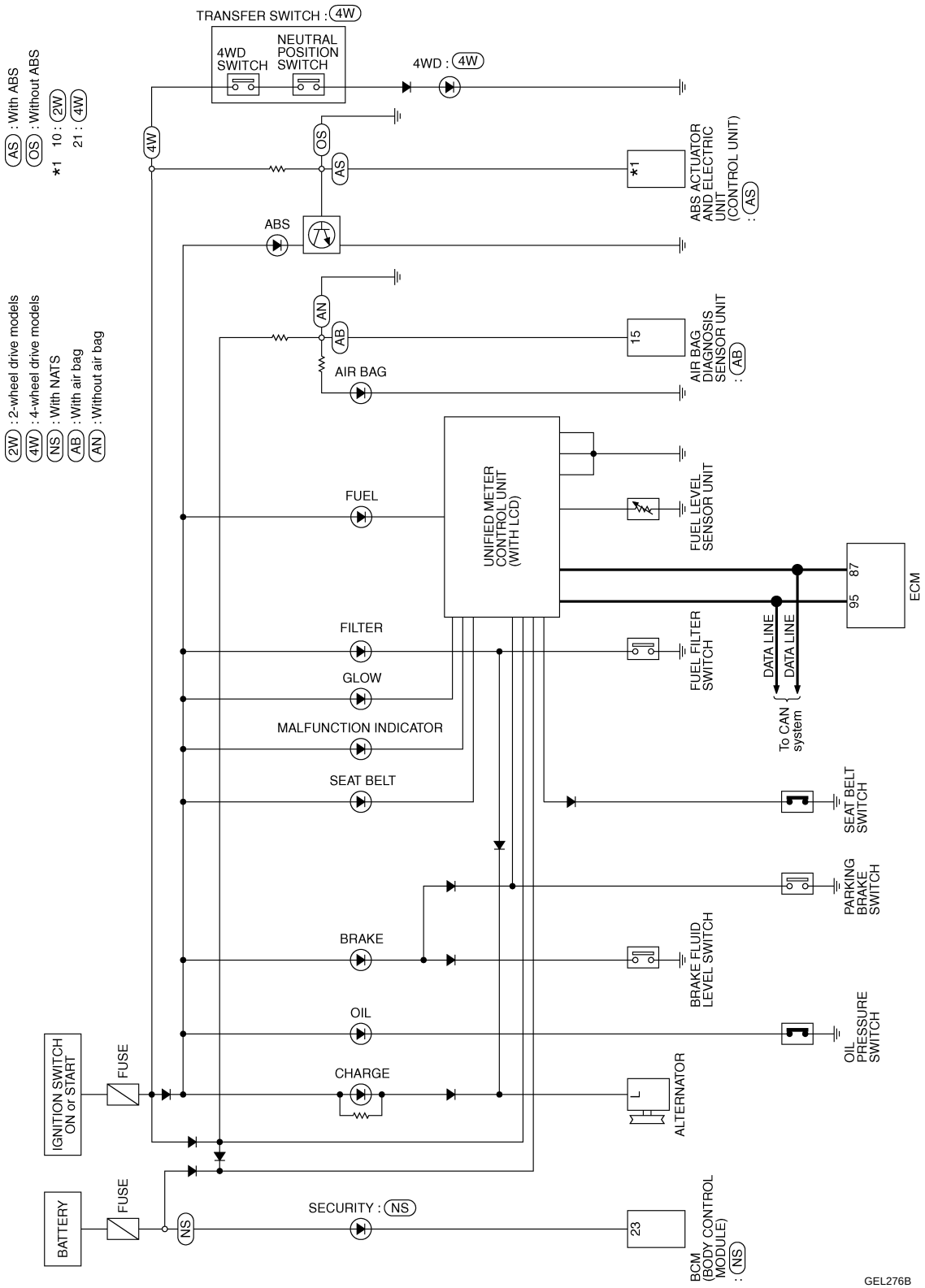

Wiring Diagram - WARN -

INFOID:0000000003715445

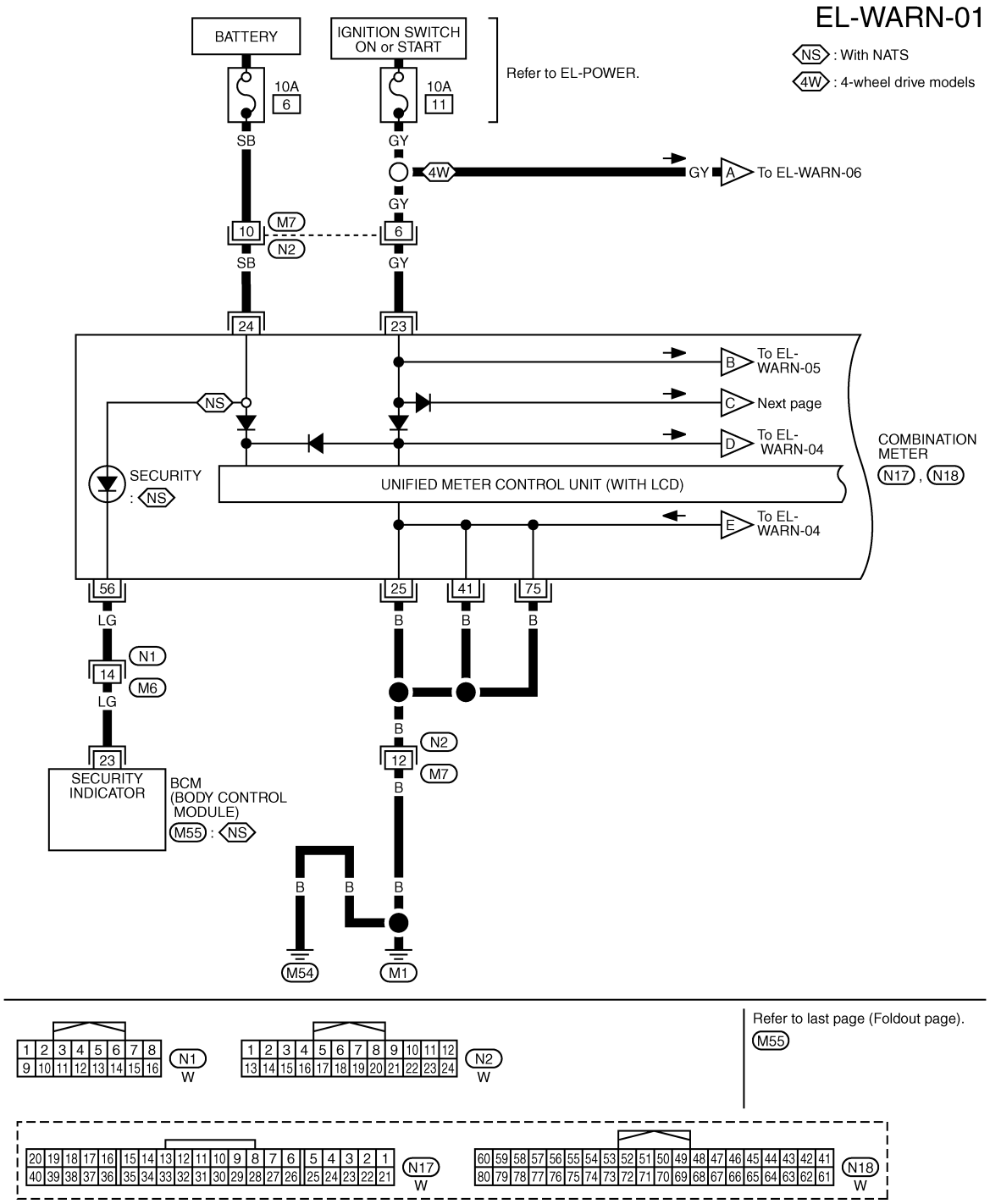

GEL277B

EL-WARN-02

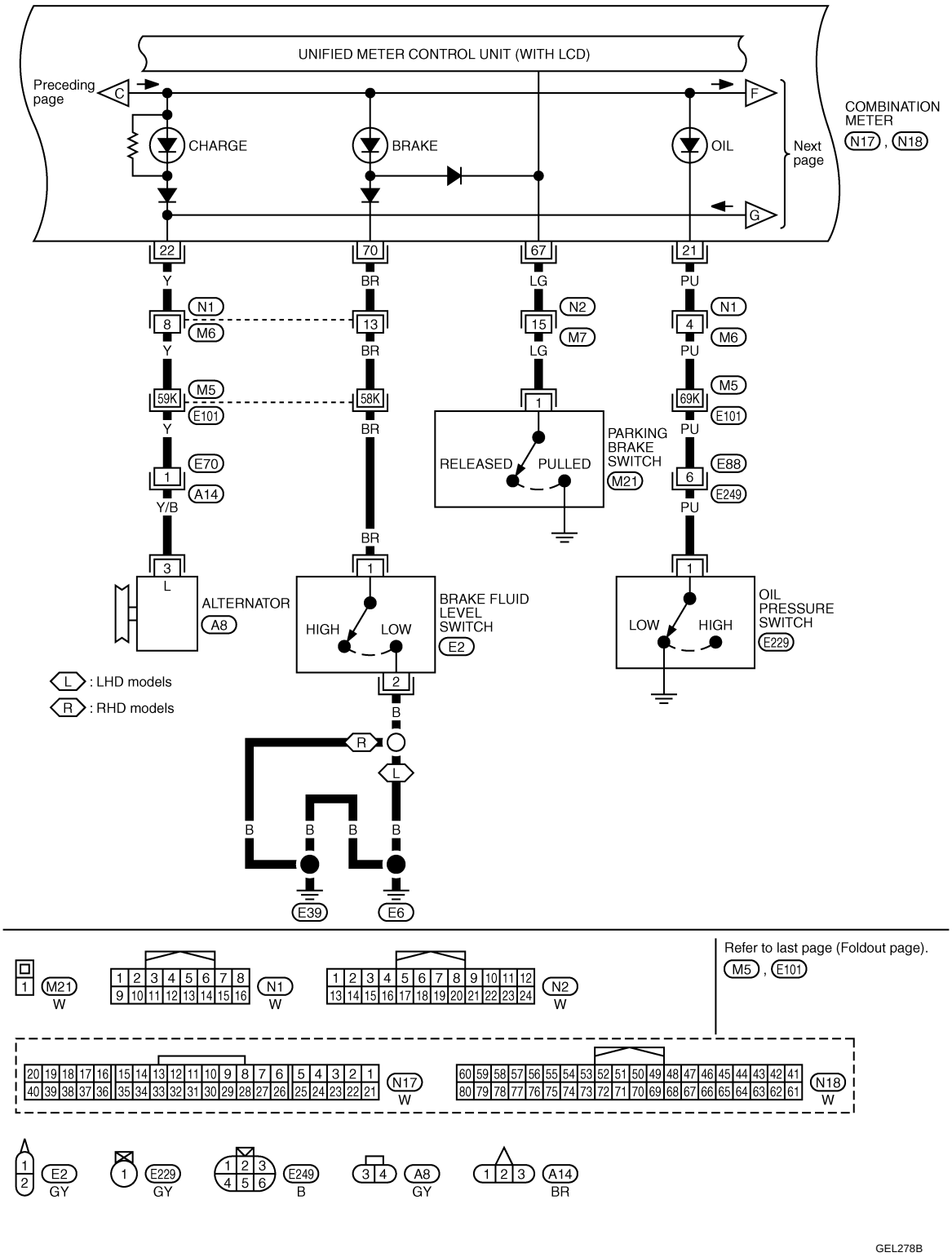
UNIFIED METER CONTROL UNIT (WITH LCD)
Preceding page
C
F
G
CHARGE
BRAKE
OIL
Next page
COMBINATION METER
N17 , N18
22
70
67
21
Y
BR
LG
PU
N1
M6
N2
M7
8
13
15
4
59K
58K
69K
M5
E101
E70
A14
E88
E249
1
6
Y/B
PARKING BRAKE SWITCH
M21
RELEASED
PULLED
3
L
ALTERNATOR
A8
BRAKE FLUID LEVEL SWITCH
E2
HIGH
LOW
OIL PRESSURE SWITCH
E229
2
B
R
E39
E6
L : LHD models
R : RHD models
Refer to last page (Foldout page).
M5 , E101
M21
W
N1
N2
N17
N18
E2
GY
E229
E249
B
A8
A14
BR
GEL278B

EL-WARN-03

: Data line

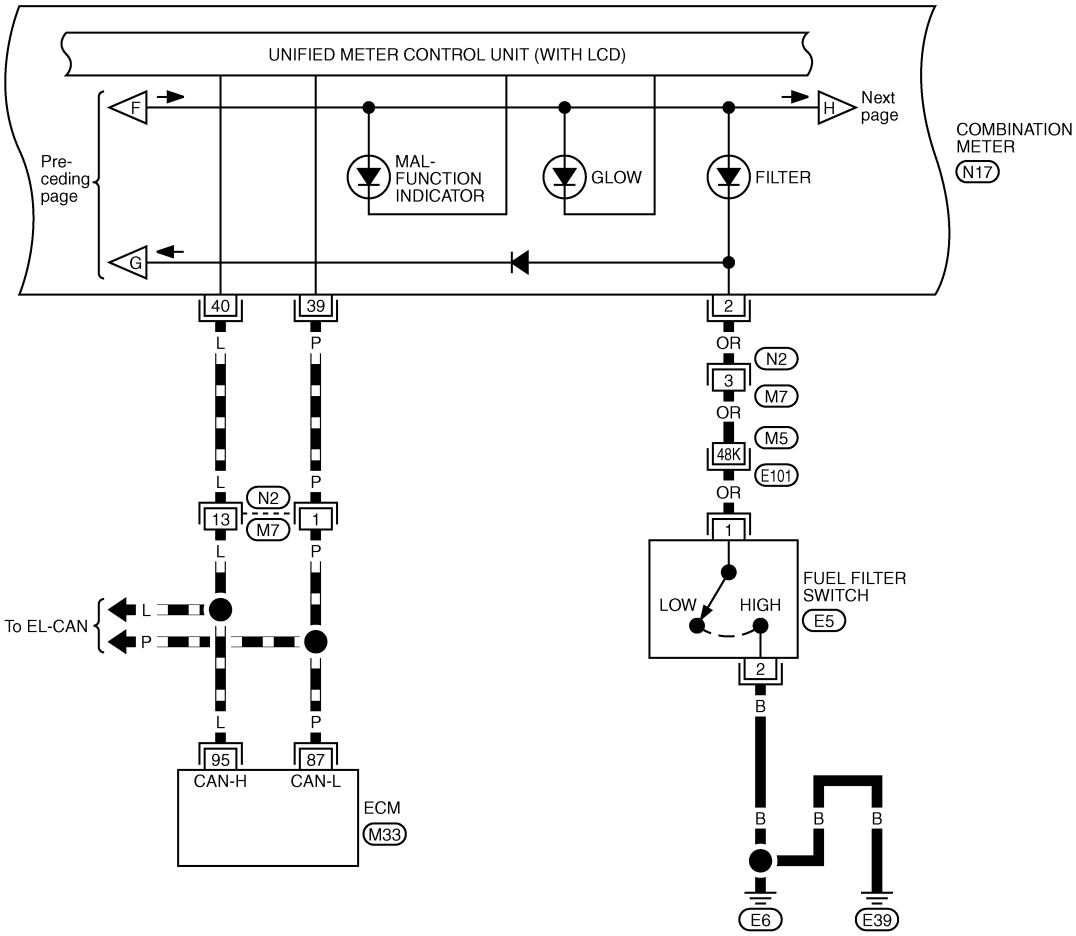

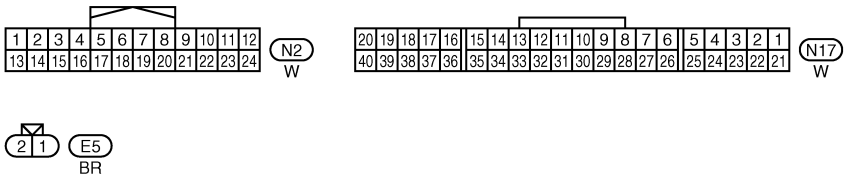

Refer to last page (Foldout page).
M5 , E101
M33

GEL279B

EL-WARN-04

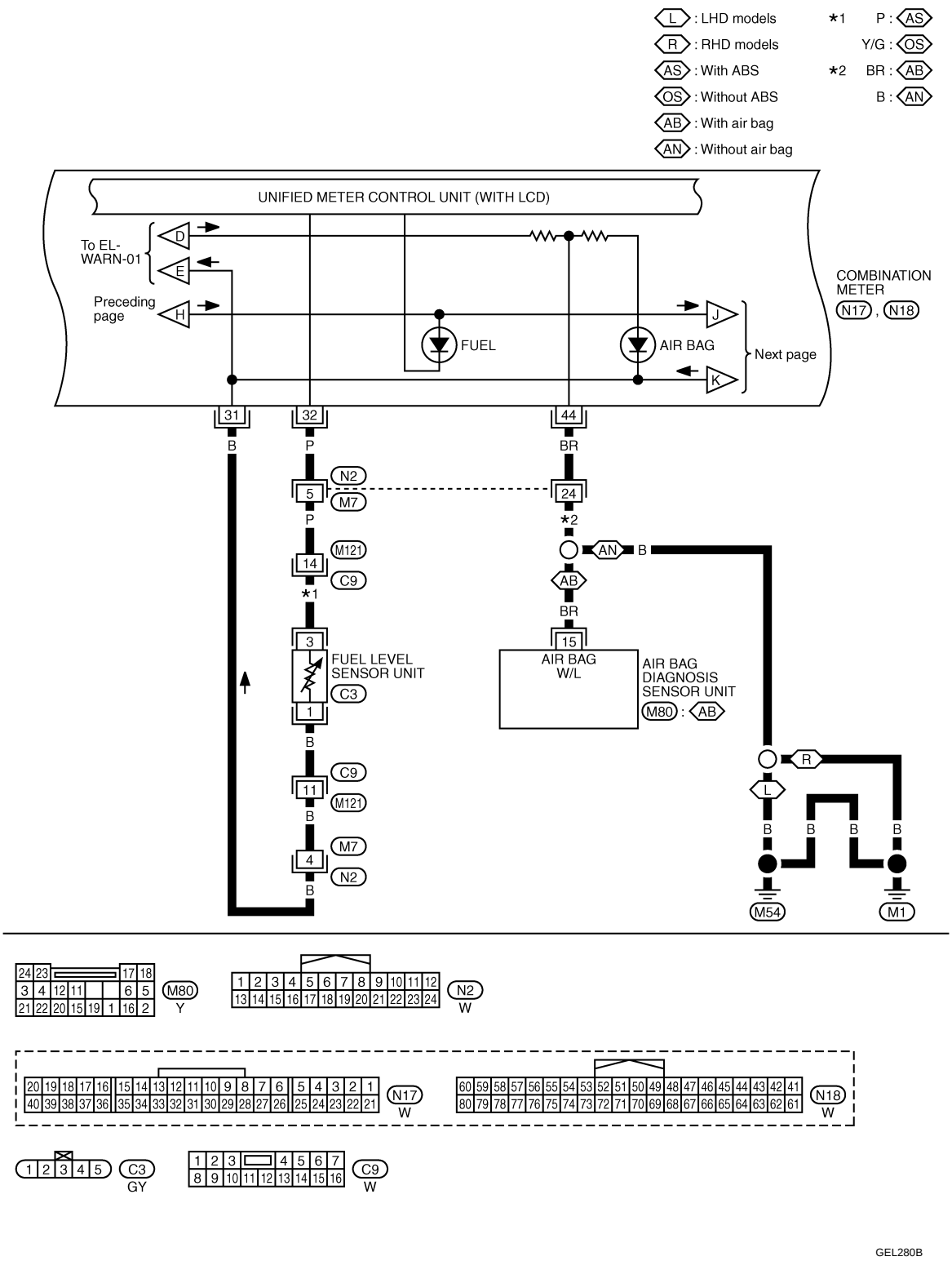
L : LHD models
R : RHD models
AS : With ABS
OS : Without ABS
AB : With air bag
AN : Without air bag
*1 P : AS
Y/G : OS
*2 BR : AB
B : AN
UNIFIED METER CONTROL UNIT (WITH LCD)
To EL-WARN-01
Preceding page
FUEL
AIR BAG
Next page
COMBINATION METER
N17 , N18
FUEL LEVEL SENSOR UNIT
C3
AIR BAG W/L
AIR BAG DIAGNOSIS SENSOR UNIT
M80 : AB
M54
M1
M80
Y
N2
W
N17
W
N18
W
C3
GY
C9
W
GEL280B

EL-WARN-05

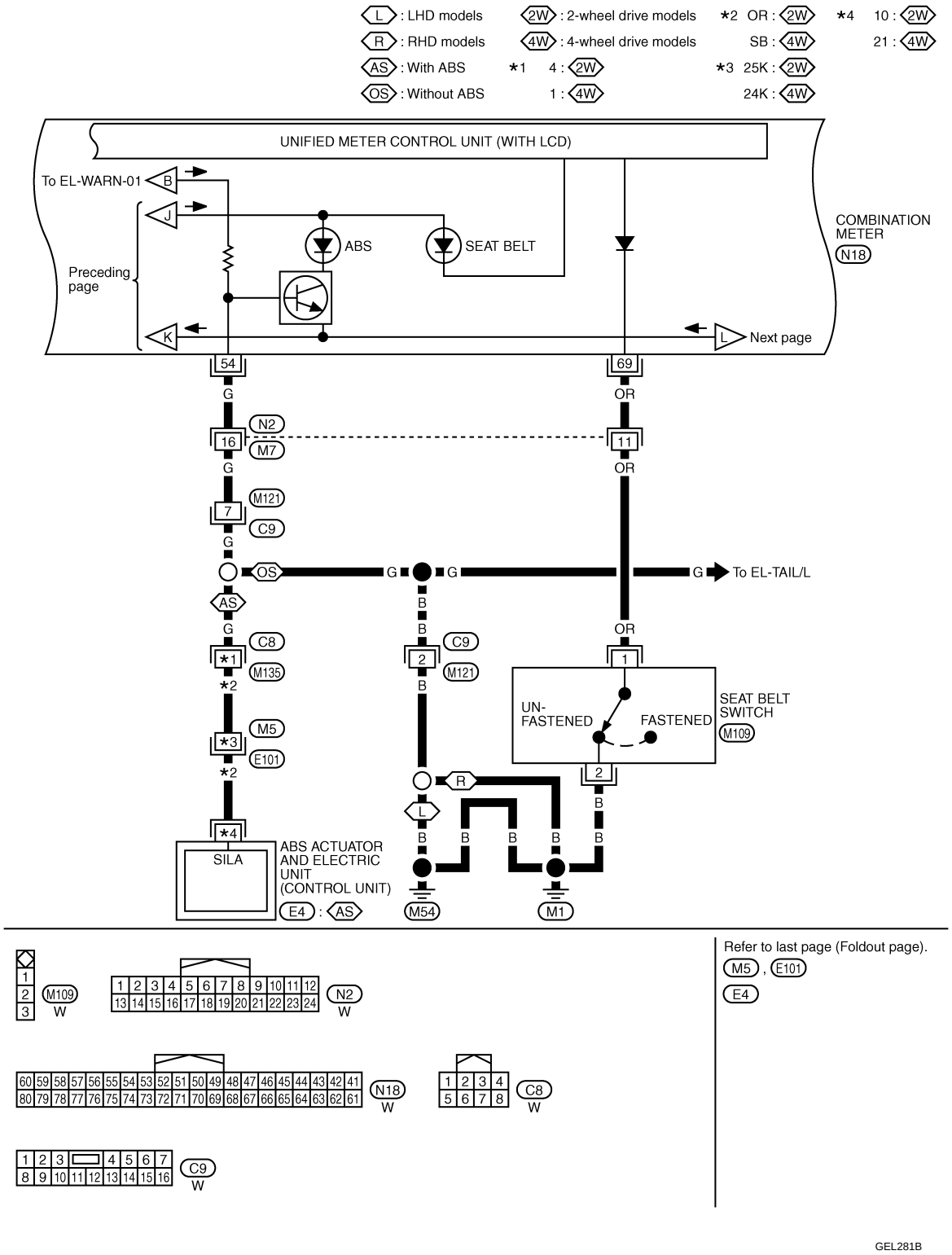
L : LHD models
R : RHD models
AS : With ABS
OS : Without ABS
2W : 2-wheel drive models
4W : 4-wheel drive models
*1 4 : 2W
1 : 4W
*2 OR : 2W
SB : 4W
*3 25K : 2W
24K : 4W
*4 10 : 2W
21 : 4W
UNIFIED METER CONTROL UNIT (WITH LCD)
To EL-WARN-01
B
J
K
L
Next page
Preceding page
ABS
SEAT BELT
COMBINATION METER
N18
54
69
G
OR
N2
M7
16
11
M121
C9
7
OS
AS
To EL-TAIL/L
C8
*1
M135
*2
M5
*3
E101
*4
SILA
ABS ACTUATOR AND ELECTRIC UNIT (CONTROL UNIT)
E4 : AS
B
2
1
R
L
M54
M1
UN-FASTENED
FASTENED
SEAT BELT SWITCH
M109
Refer to last page (Foldout page).
M5 , E101
E4
M109
W
N2
W
N18
W
C8
W
C9
W
GEL281B

EL-WARN-06

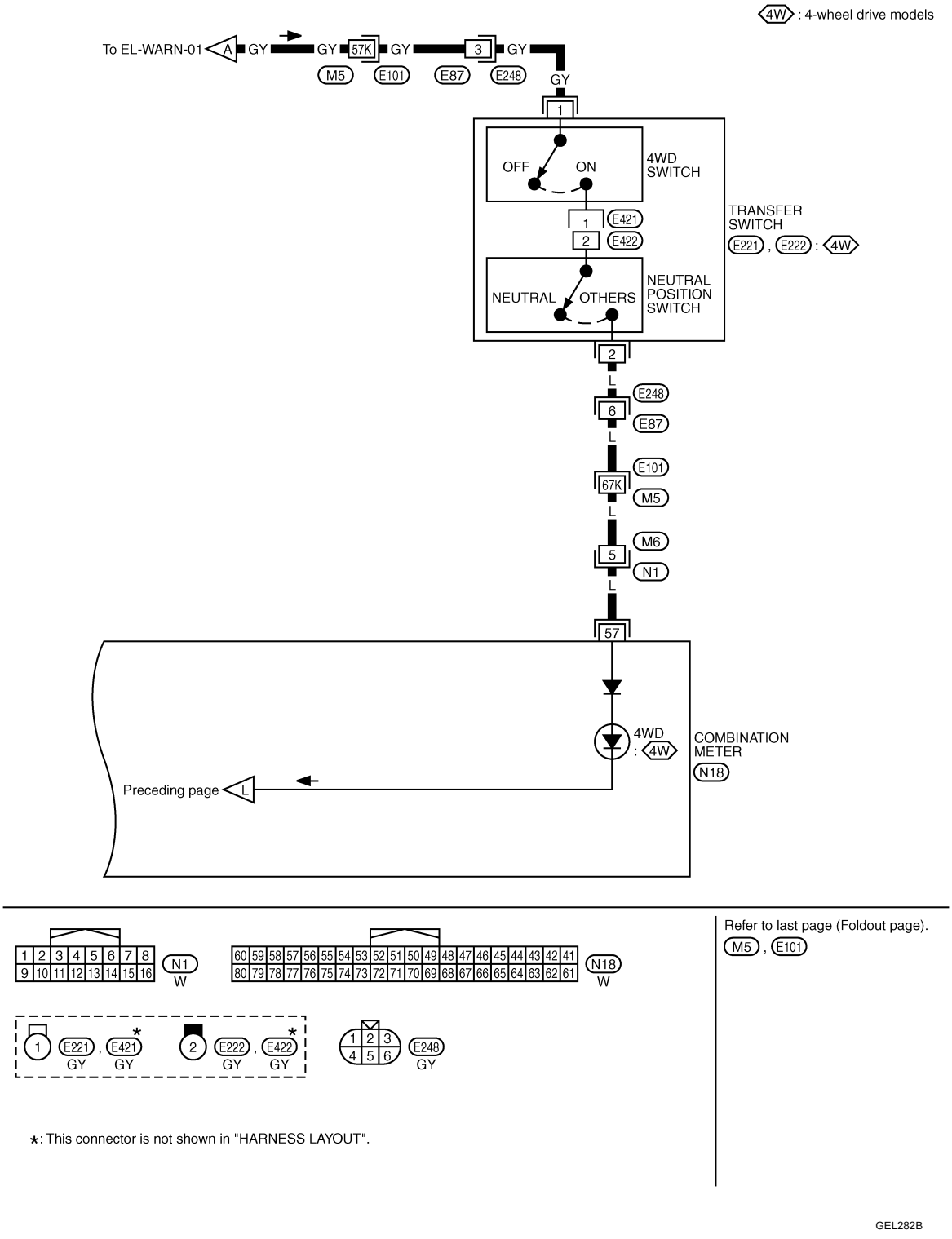
4W : 4-wheel drive models
To EL-WARN-01
A
GY
57K
3
M5
E101
E87
E248
1
OFF
ON
4WD SWITCH
E421
E422
2
TRANSFER SWITCH
E221 , E222 : 4W
NEUTRAL
OTHERS
NEUTRAL POSITION SWITCH
L
6
67K
5
M6
N1
57
4WD : 4W
COMBINATION METER
N18
Preceding page
Refer to last page (Foldout page).
M5 , E101
N1
W
N18
W
E221 , E421
E222 , E422
E248
GY
*: This connector is not shown in "HARNESS LAYOUT".
GEL282B

WARNING BUZZER

System Description

INFOID:0000000003715452

Buzzer is installed in the combination meter.

LIGHT REMINDER WARNING BUZZER

The warning buzzer sounds, when driver's door is opened (door switch ON) with lighting switch ON except in the case of ignition switch ON or START position.

SEAT BELT REMINDER WARNING BUZZER

Seat belt reminder warning buzzer sounds for approximately 90 seconds, when vehicle speed becomes more than 15 km/h (9.3 MPH) with driver seat belt unfastened.

Wiring Diagram - BUZZER - /Seat Belt Reminder

INFOID:0000000003715449

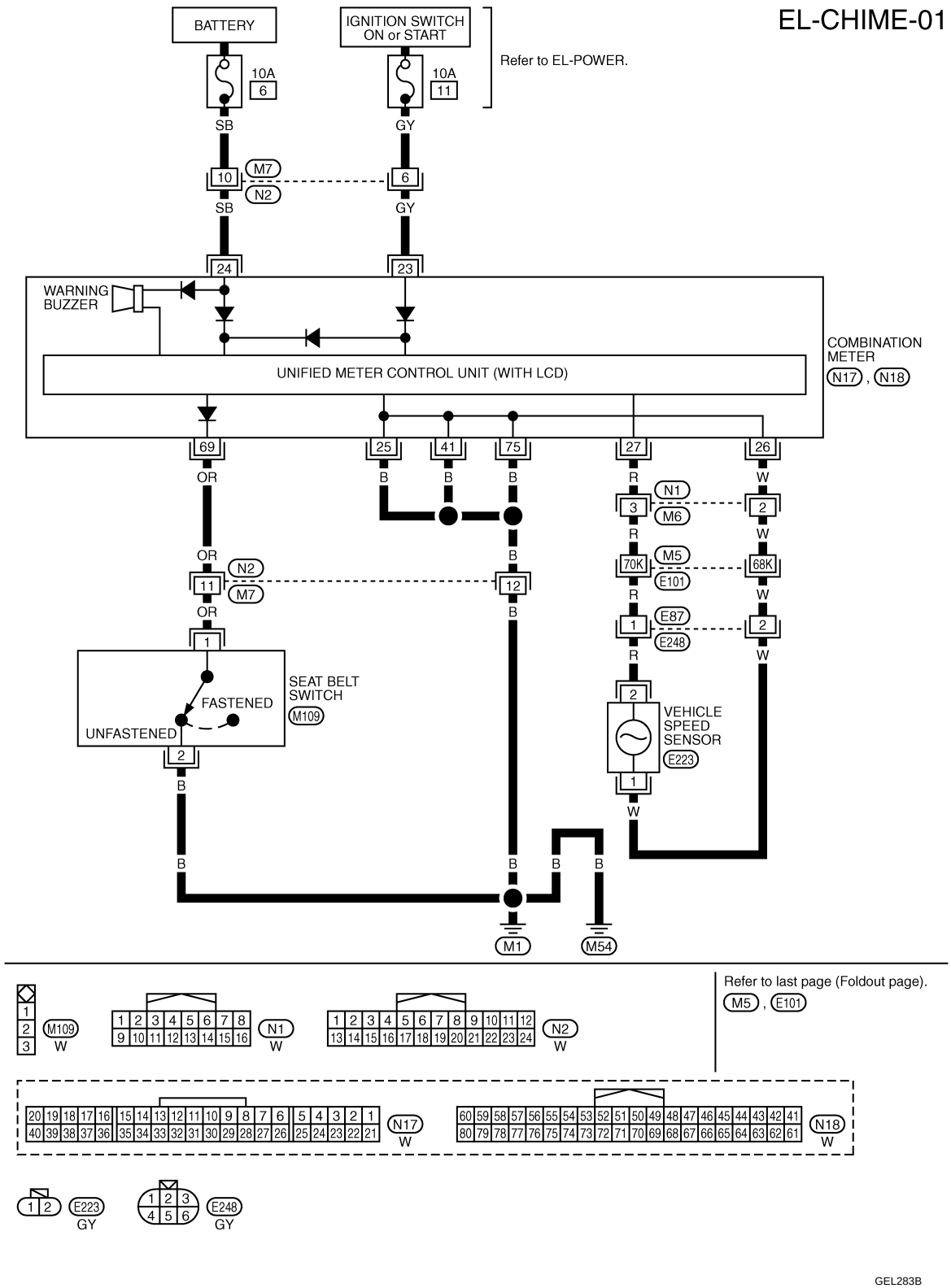

Wiring Diagram - BUZZER - /Light Reminder

INFOID:0000000003782388

LHD MODELS

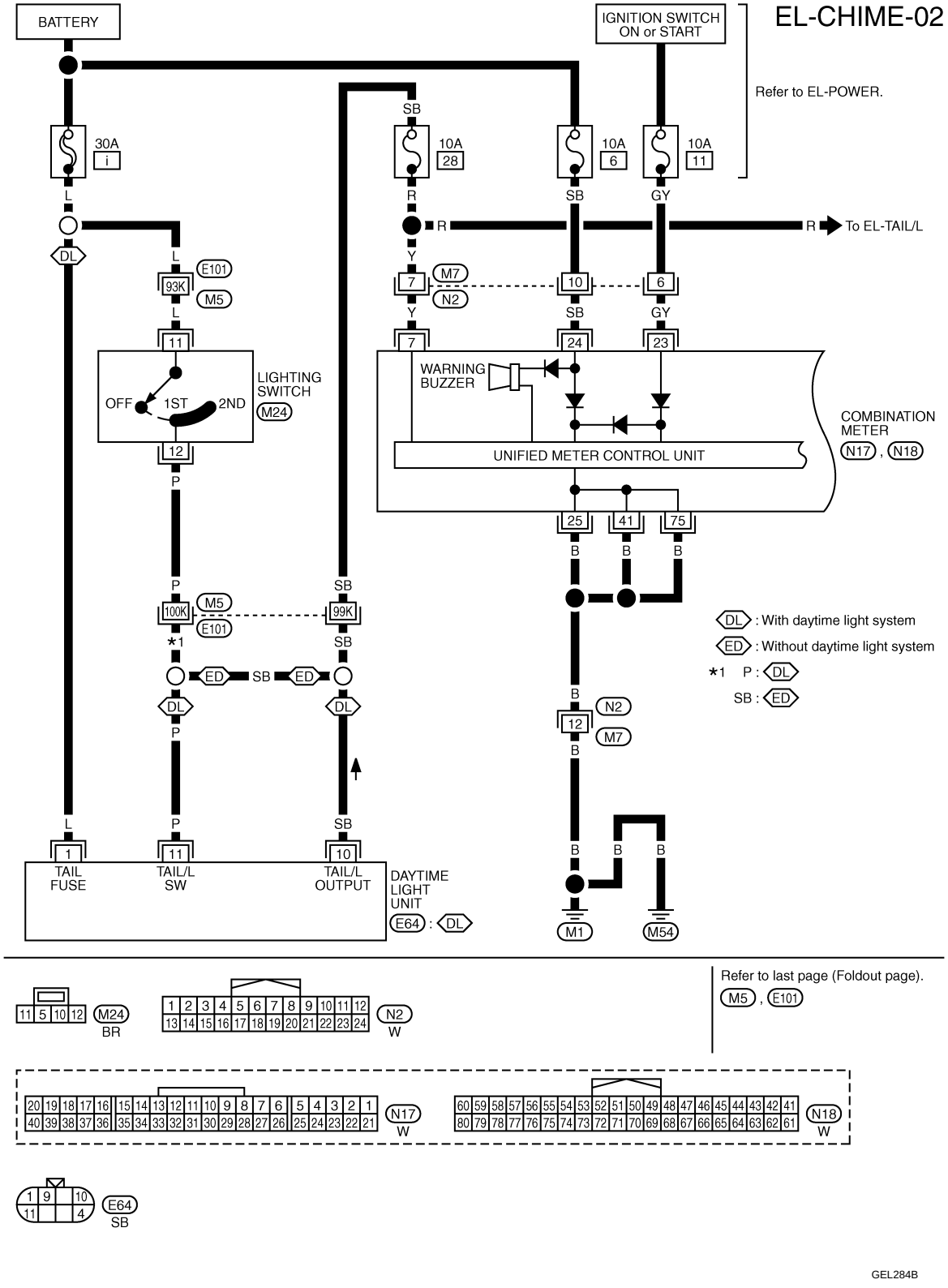

EL-CHIME-03

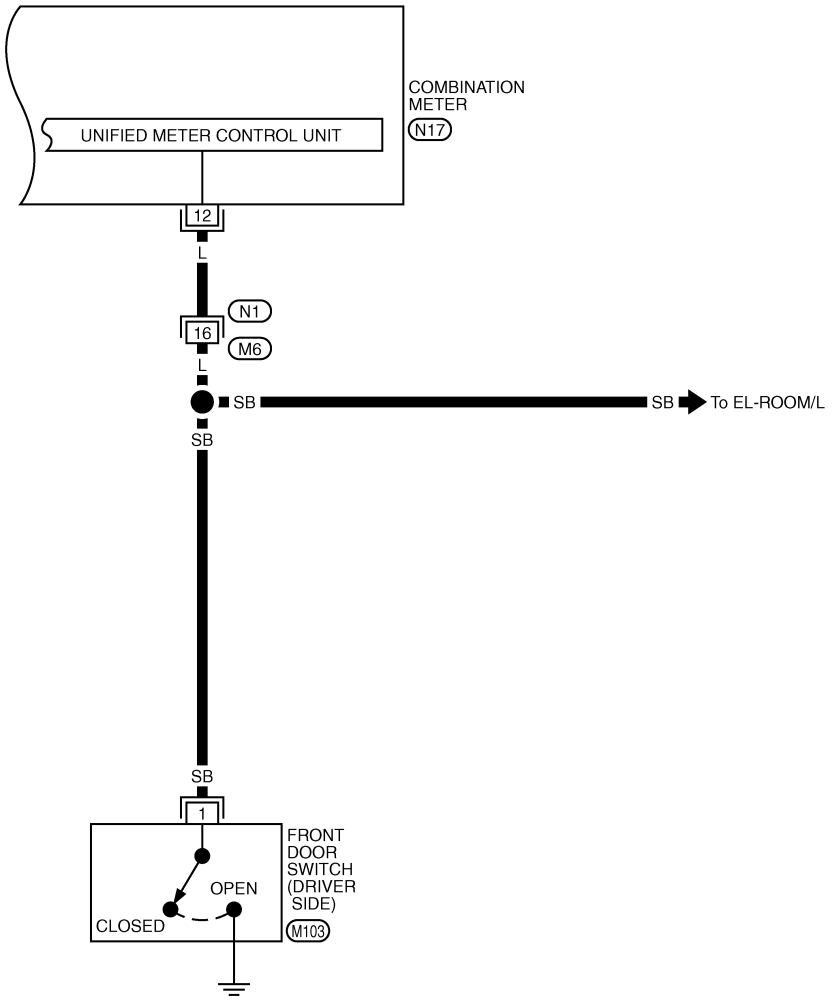

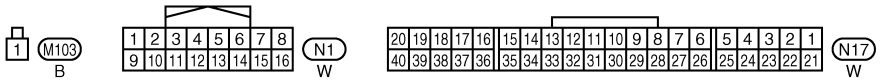

GEL285B

RHD MODELS

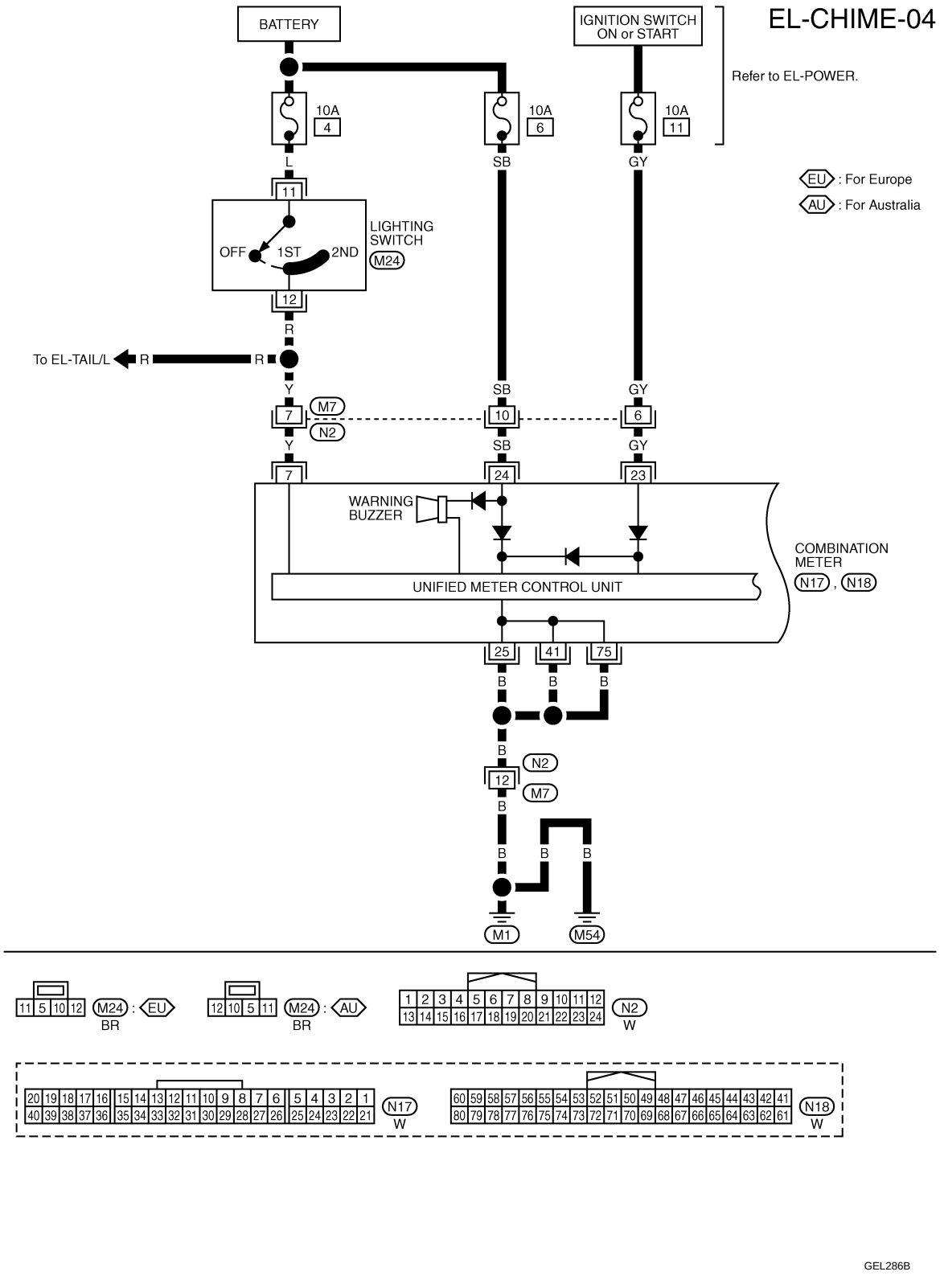
EL-CHIME-04
BATTERY
IGNITION SWITCH ON or START
Refer to EL-POWER.
10A 4
10A 6
10A 11
L
SB
GY
EU : For Europe
AU : For Australia
11
LIGHTING SWITCH
OFF
1ST
2ND
M24
12
R
To EL-TAIL/L
R
R
Y
SB
GY
7
M7
N2
10
6
Y
SB
GY
7
24
23
WARNING BUZZER
COMBINATION METER
N17 , N18
UNIFIED METER CONTROL UNIT
25
41
75
B
B
B
B
N2
12
M7
B
B
B
B
M1
M54
11 5 10 12
M24 : EU
BR
12 10 5 11
M24 : AU
BR
1 2 3 4 5 6 7 8 9 10 11 12
13 14 15 16 17 18 19 20 21 22 23 24
N2
W
20 19 18 17 16 15 14 13 12 11 10 9 8 7 6 5 4 3 2 1
40 39 38 37 36 35 34 33 32 31 30 29 28 27 26 25 24 23 22 21
N17
W
60 59 58 57 56 55 54 53 52 51 50 49 48 47 46 45 44 43 42 41
80 79 78 77 76 75 74 73 72 71 70 69 68 67 66 65 64 63 62 61
N18
W
GEL286B

EL-CHIME-05

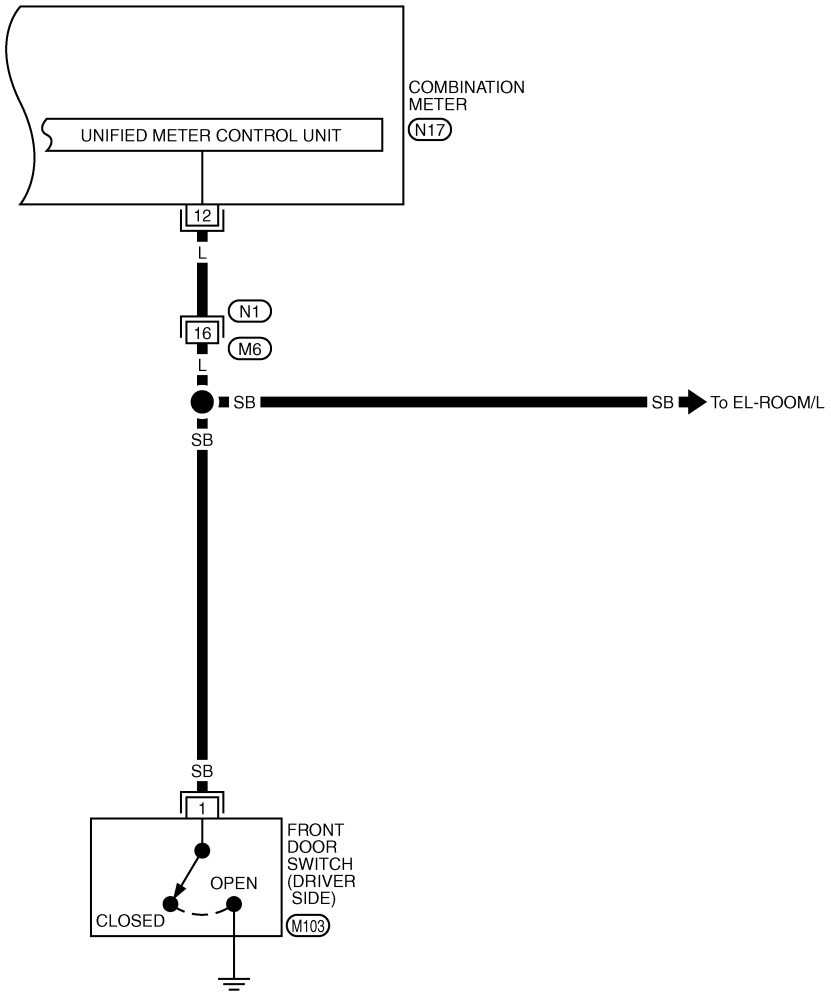

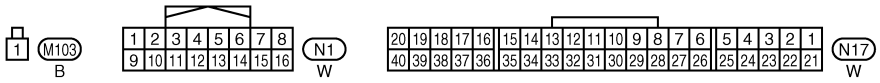

GEL287B

FRONT WIPER AND WASHER

Wiring Diagram - WIPER -/With Intermittent for Floor-shift

INFOID:0000000003792709

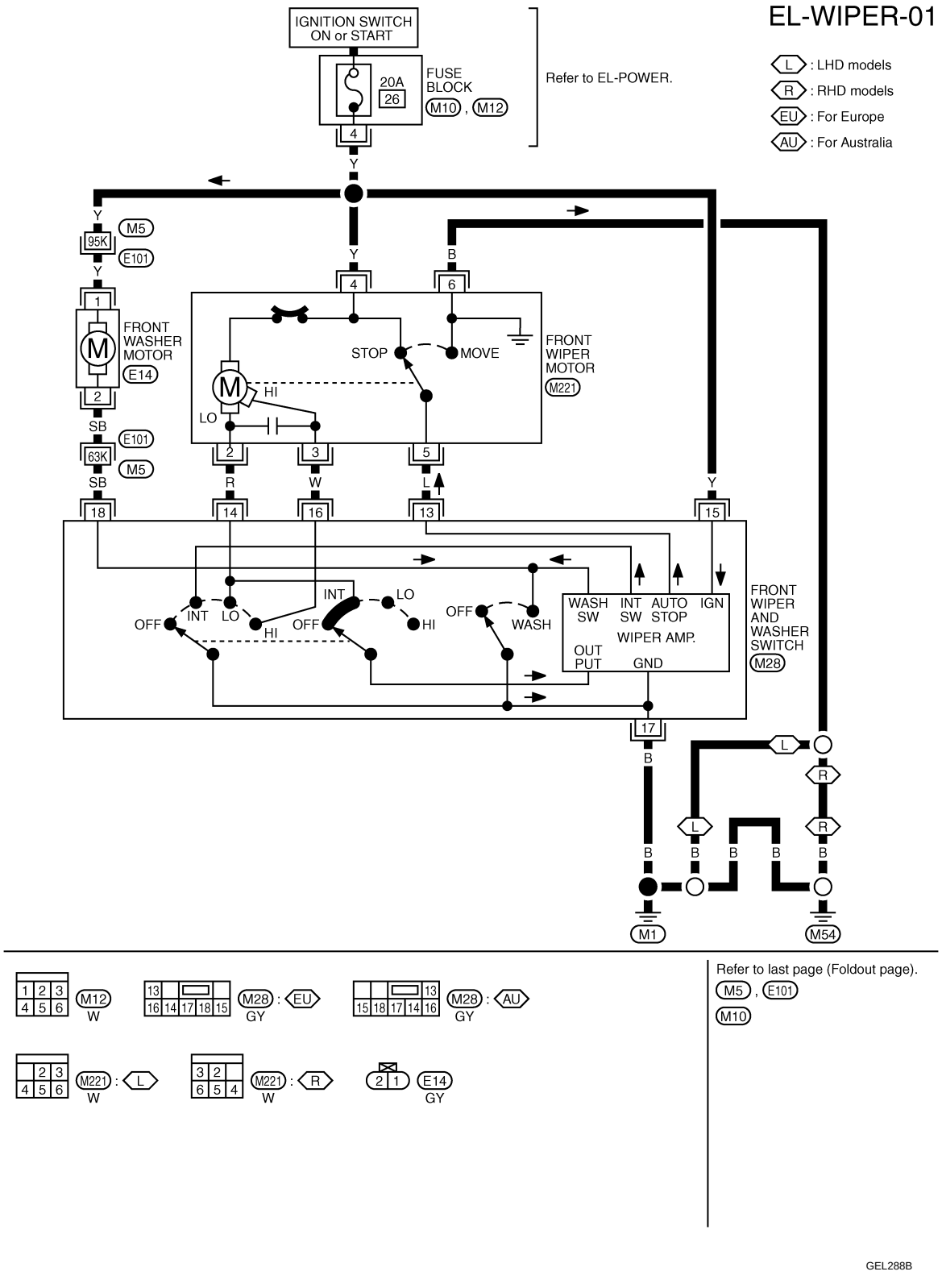

HEADLAMP WASHER

Wiring Diagram - HLC -

INFOID:0000000003792710

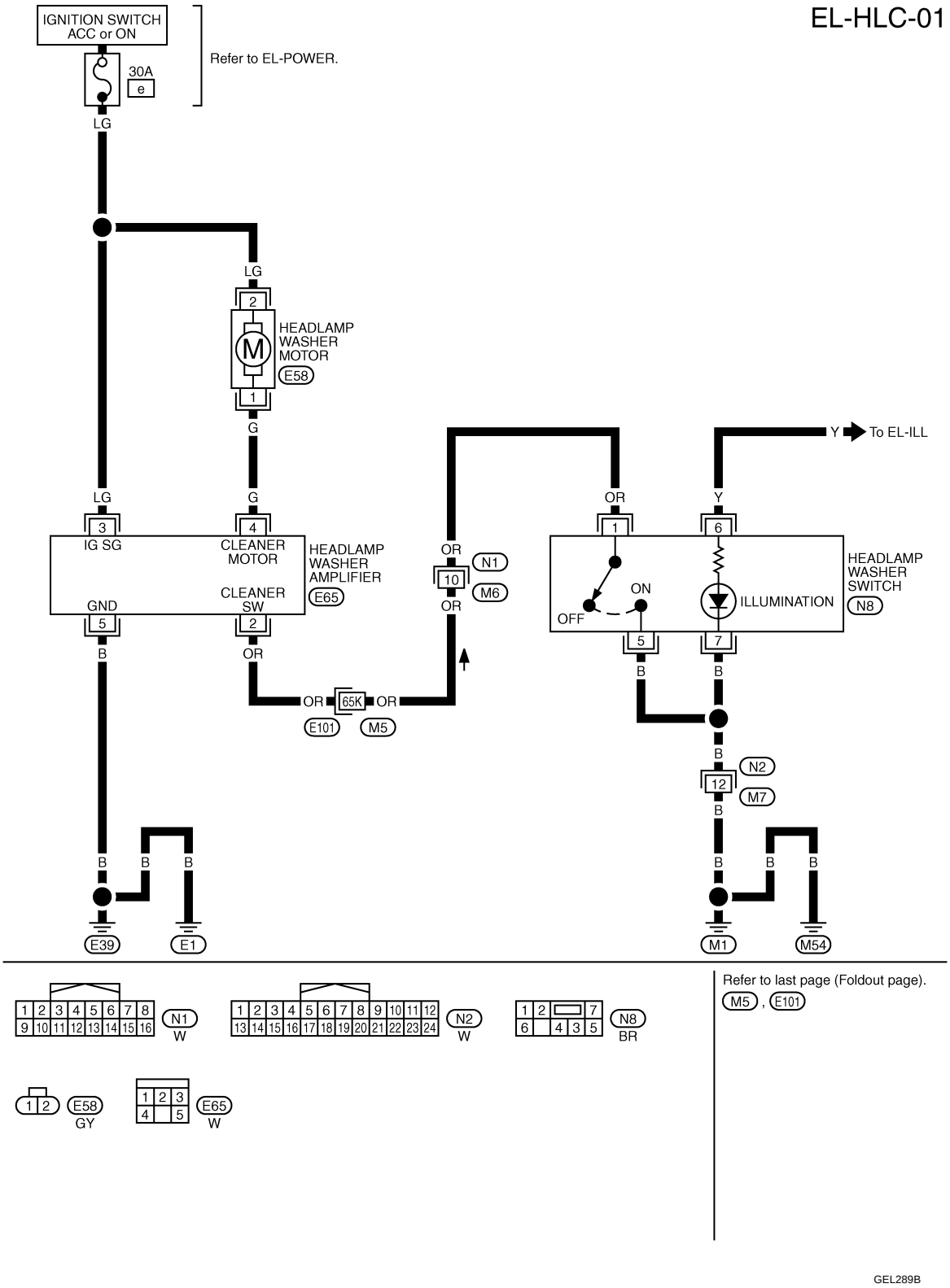

HORN

Wiring Diagram - HORN -

INFOID:0000000003792711

EL-HORN-01

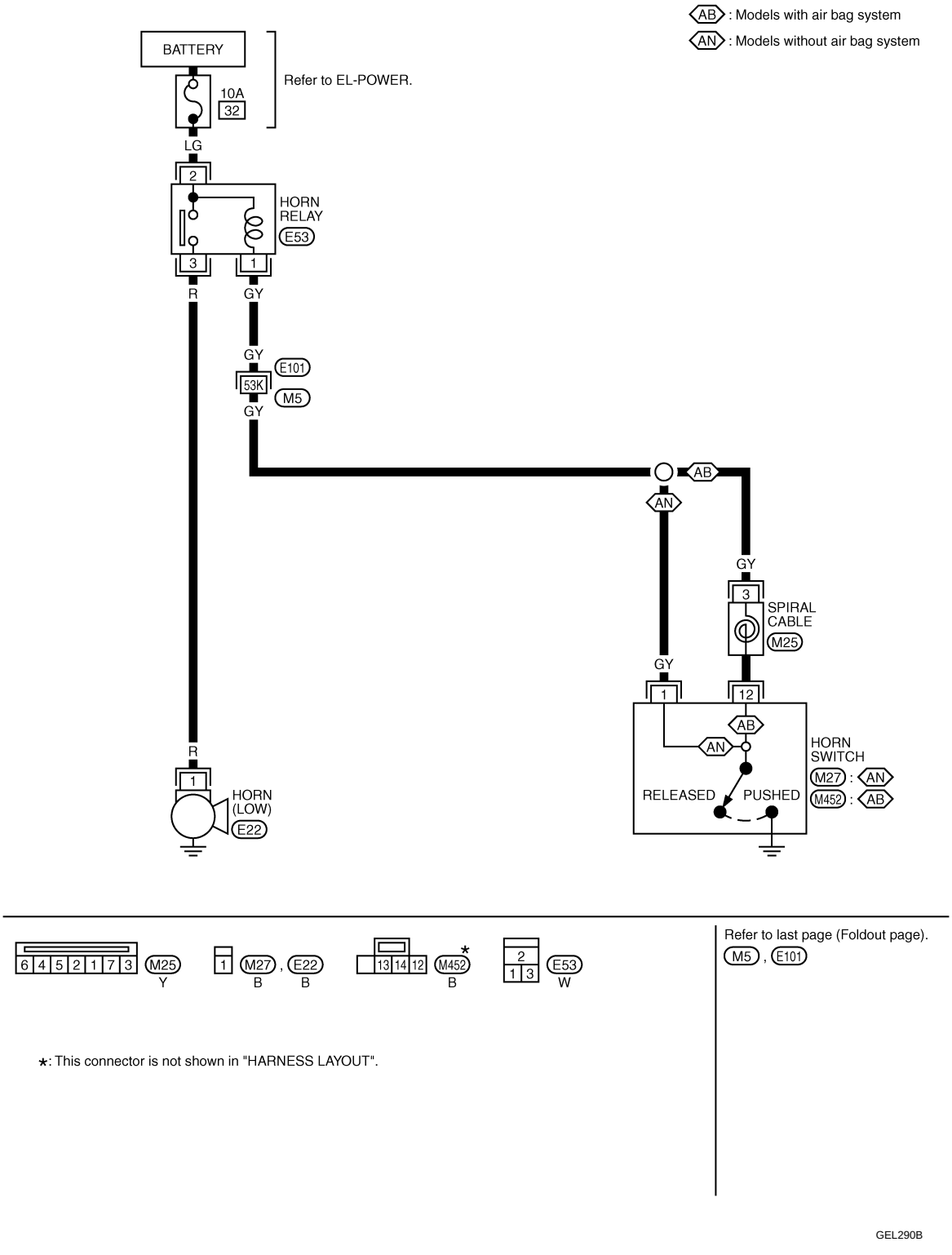

★: This connector is not shown in "HARNESS LAYOUT".

CIGARETTE LIGHTER

Wiring Diagram - CIGAR -

INFOID:0000000003792712

EL-CIGAR-01

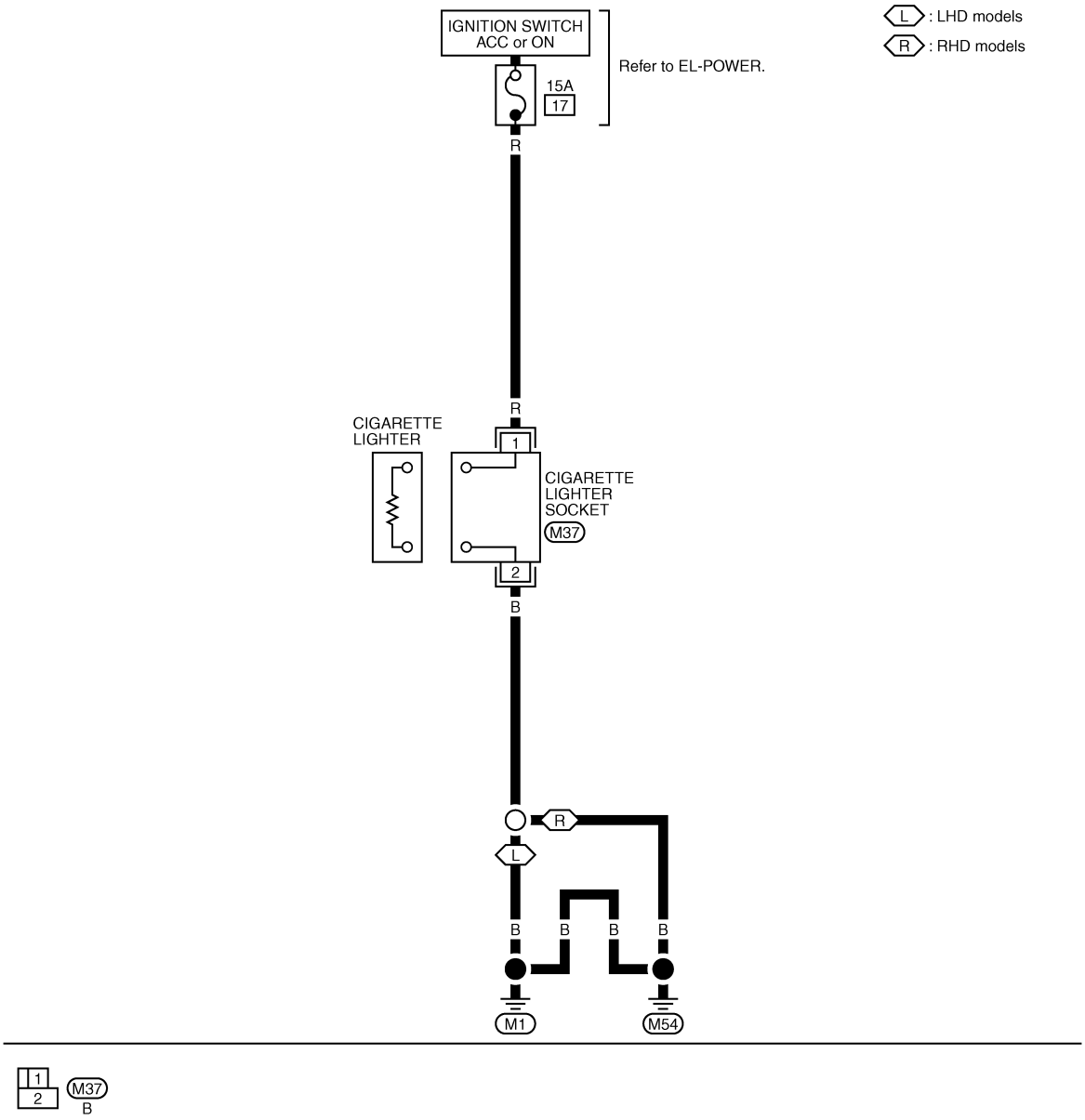

GEL291B

REAR WINDOW DEFOGGER AND MIRROR DEFOGGER

Wiring Diagram - DEF -

INFOID:0000000003793877

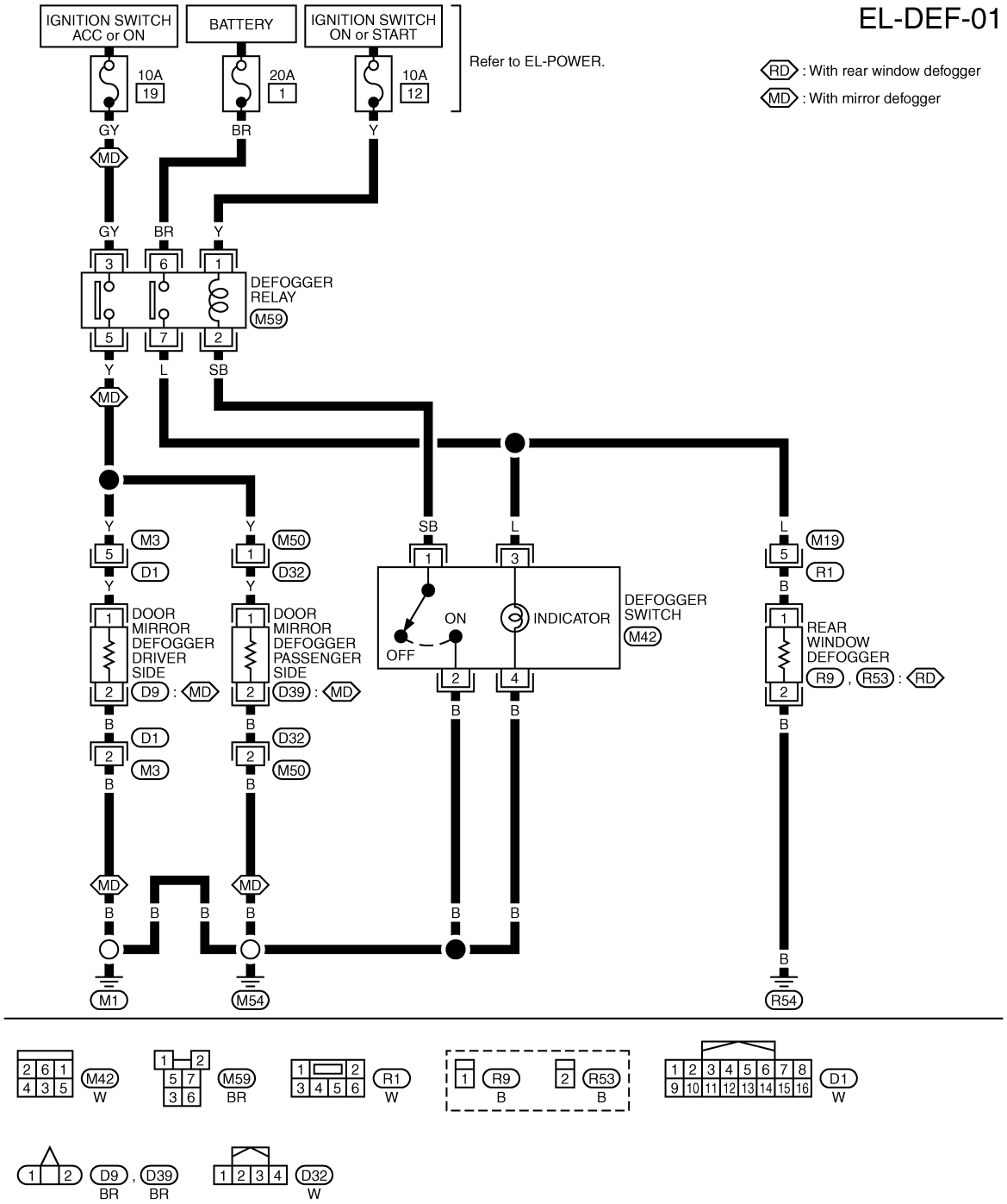

AUDIO

Wiring Diagram - AUDIO -/LHD Models for Europe

INFOID:0000000003777807

EL-AUDIO-01

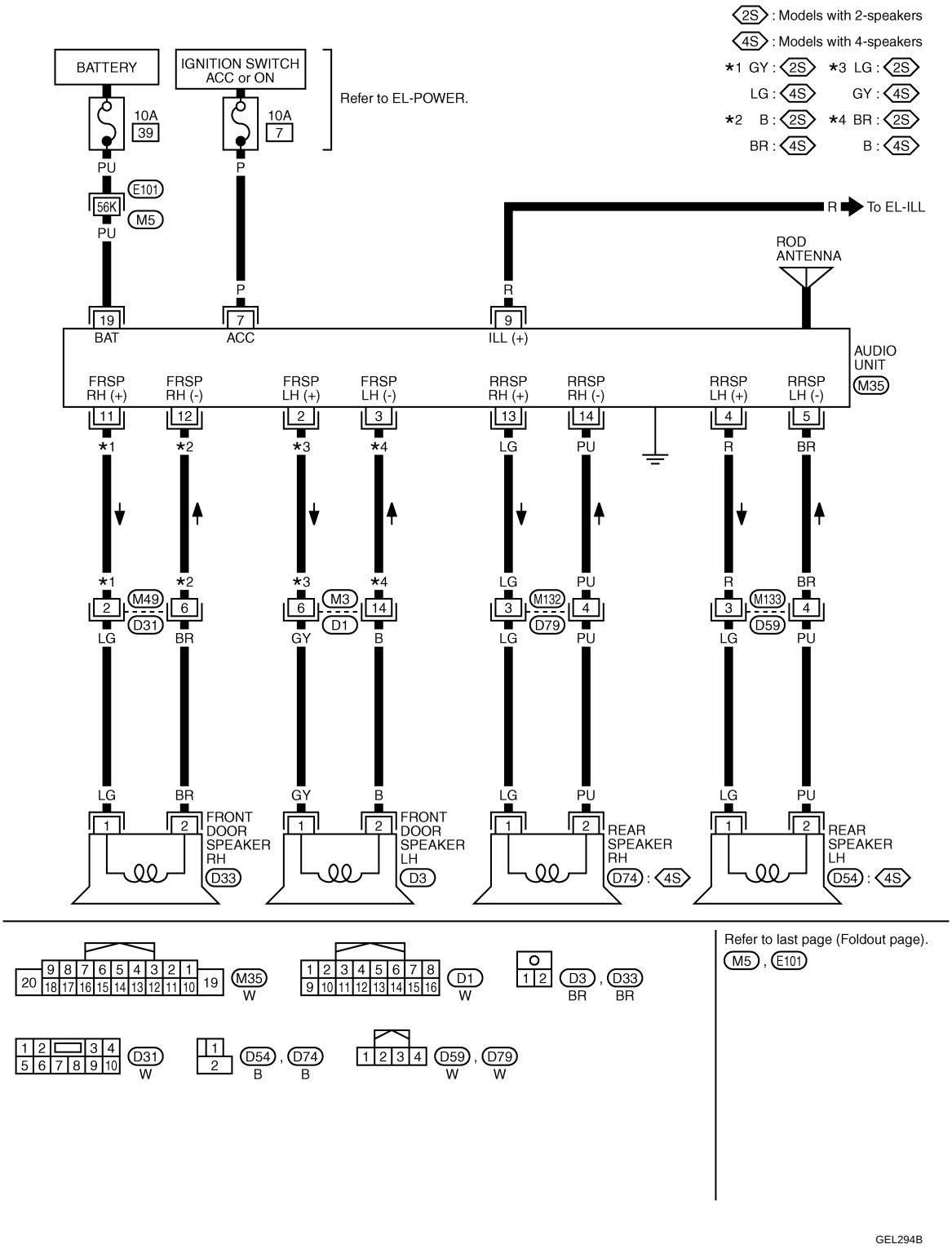

Wiring Diagram - AUDIO -/RHD Models

INFOID:0000000003777811

EL-AUDIO-02

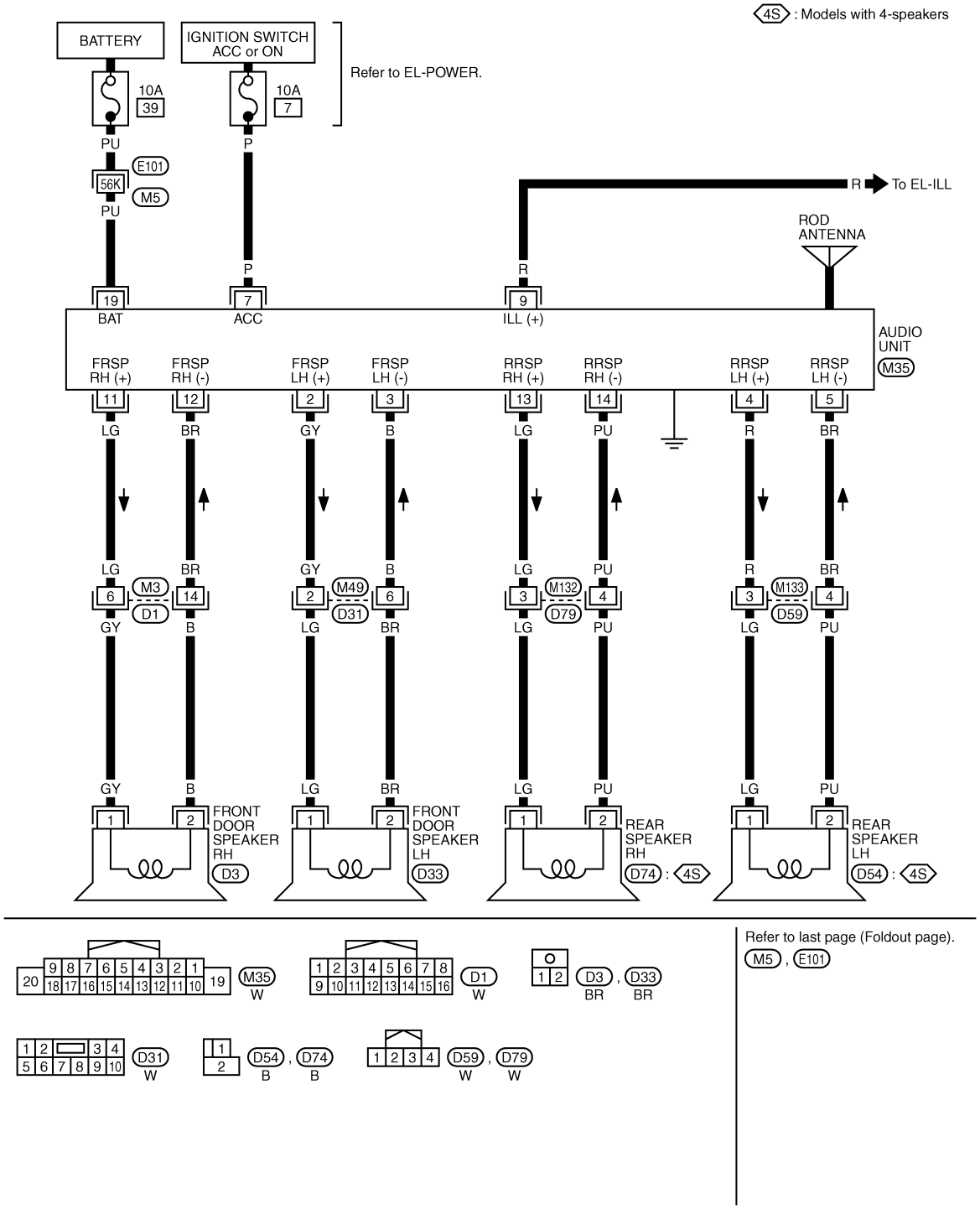

POWER DOOR MIRROR

Wiring Diagram - MIRROR -/LHD Models

INFOID:0000000003777716

EL-MIRROR-01

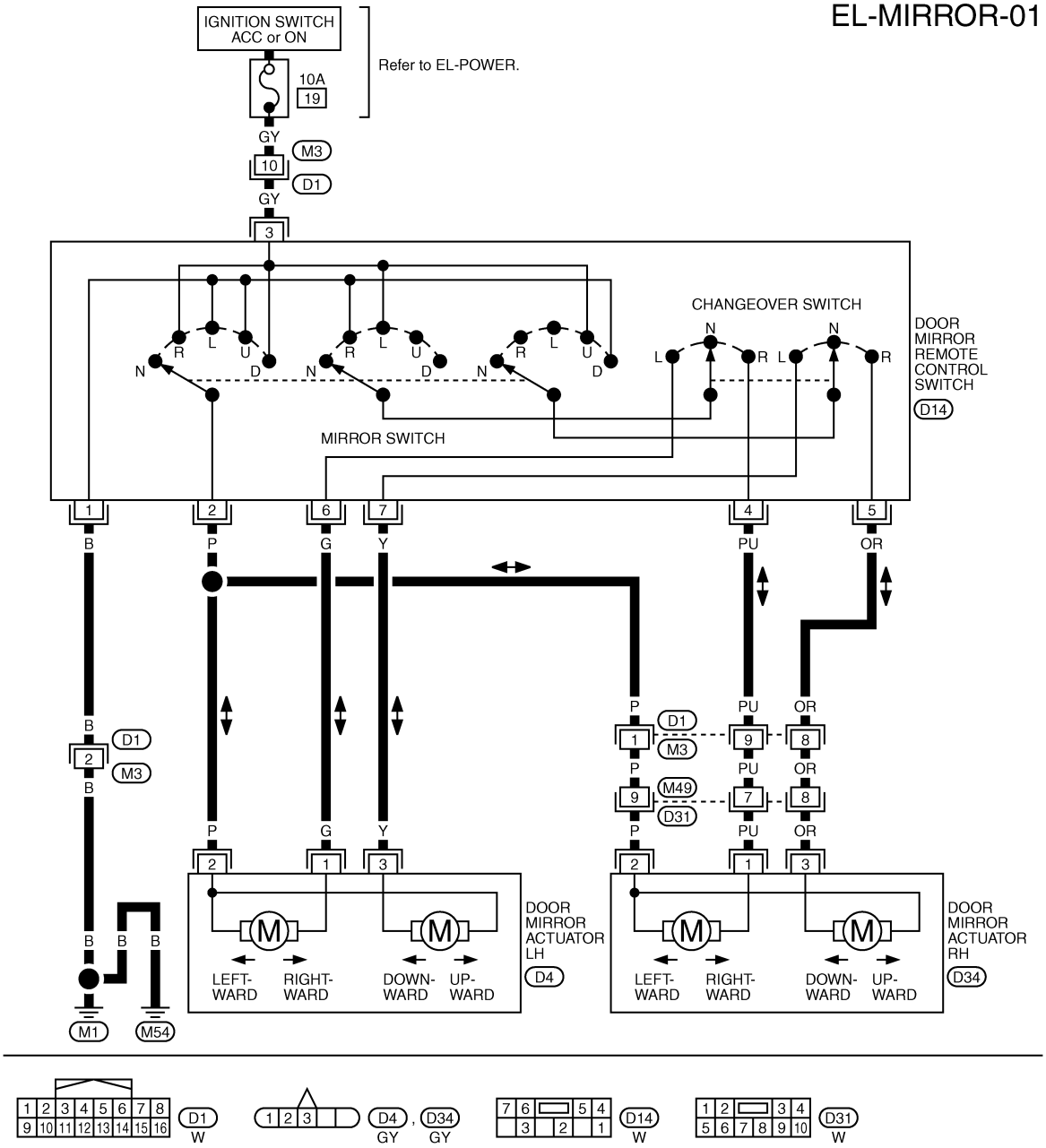

GEL296B

Wiring Diagram - MIRROR -/RHD Models

INFOID:0000000003793878

EL-MIRROR-02

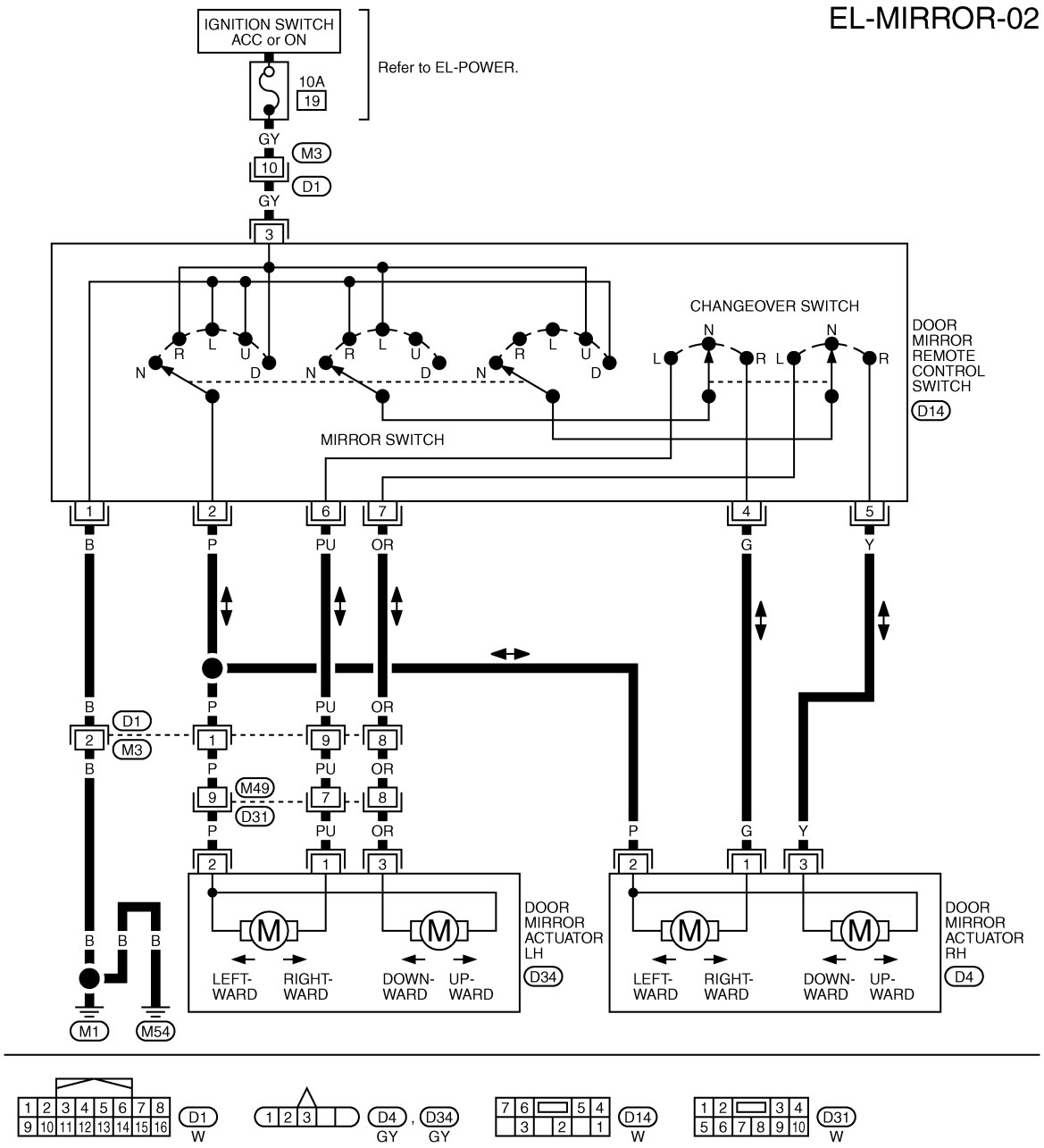

GEL297B

HEATED SEAT

Wiring Diagram - H/SEAT -

INFOID:0000000003777687

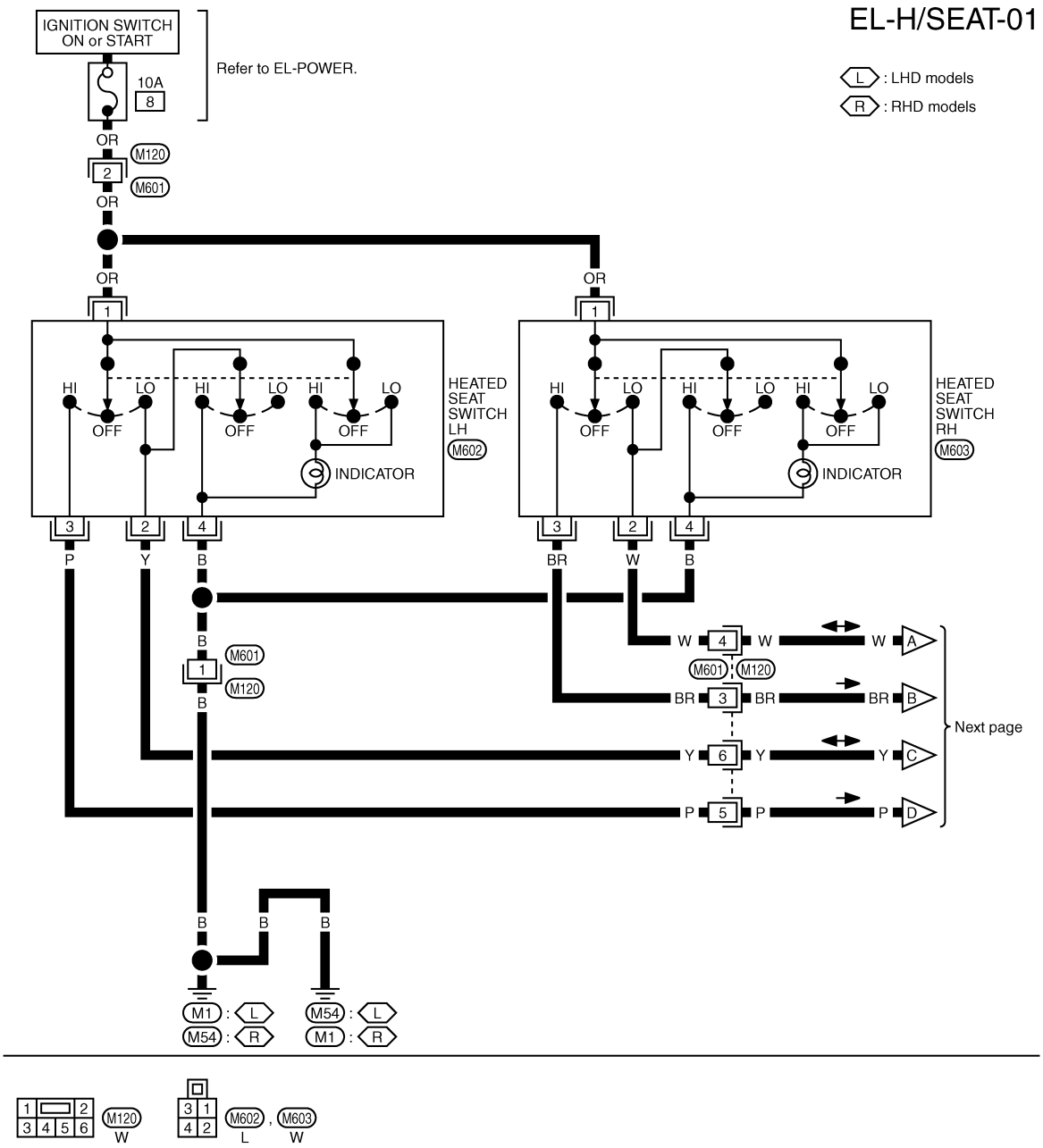

GEL298B

EL-H/SEAT/02

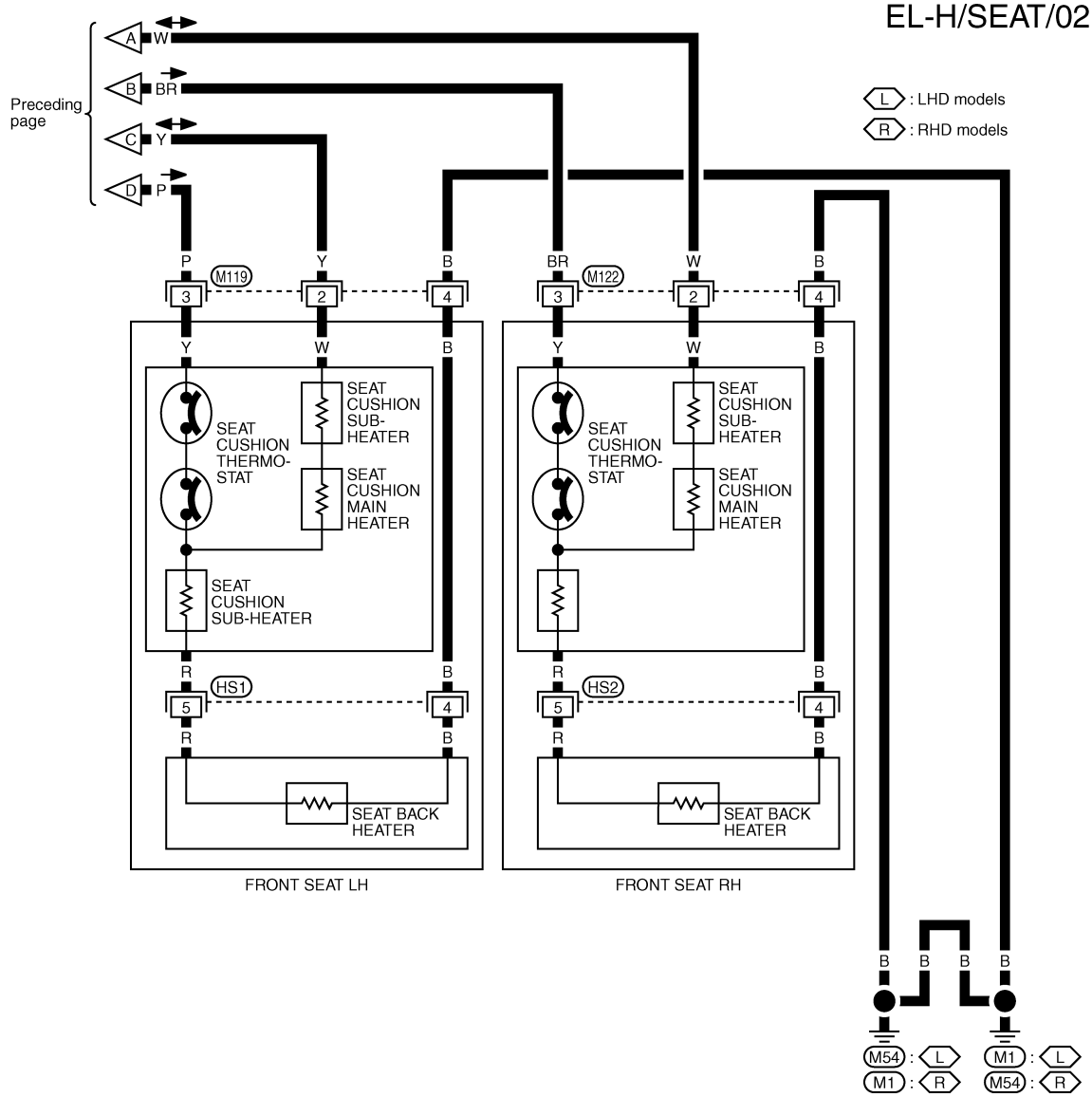

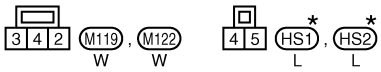

*: This connector is not shown in "HARNESS LAYOUT"

GEL299B

POWER WINDOW

Schematic/With Interruption Detection Function

INFOID:0000000003777692

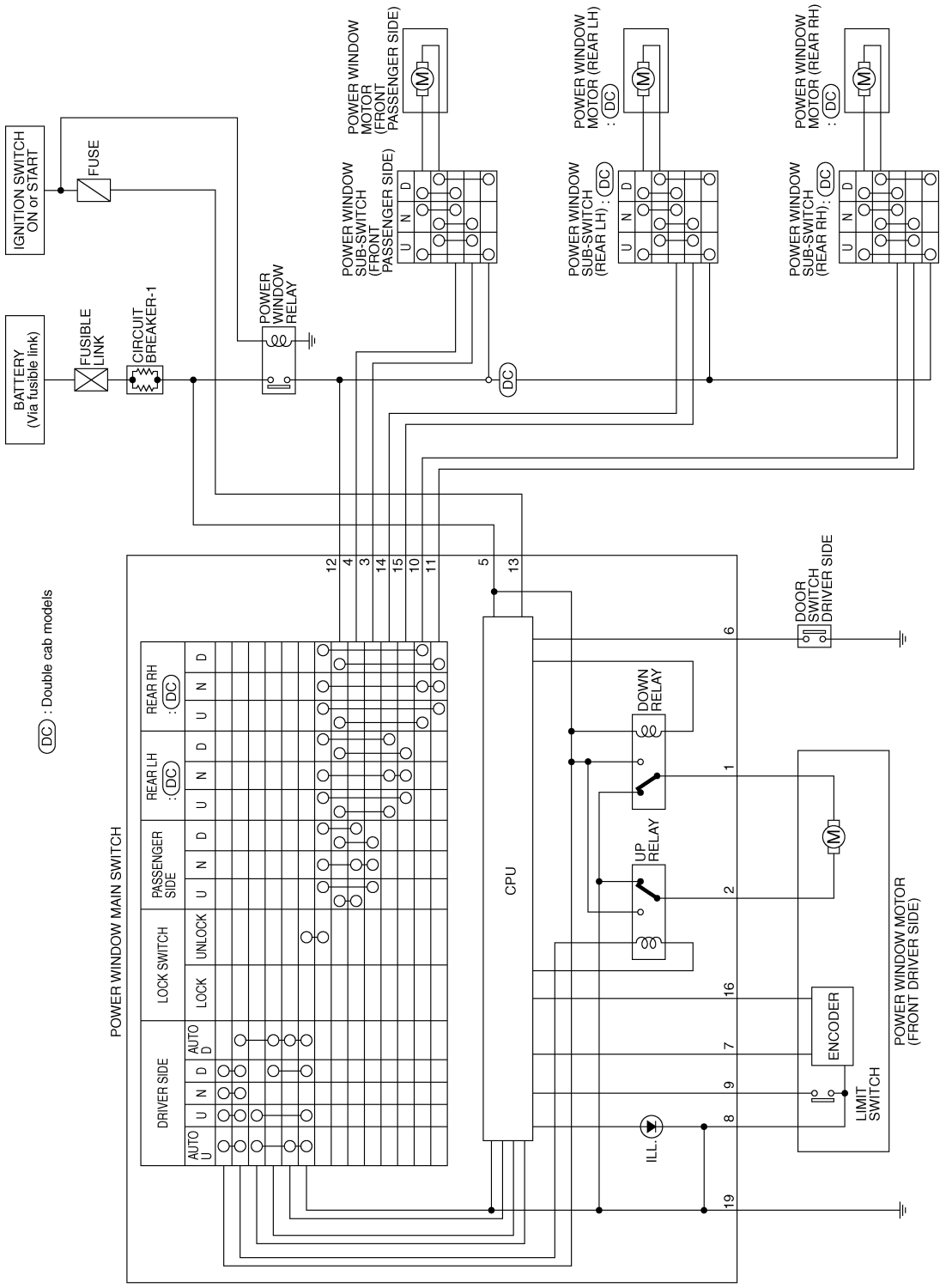

Wiring Diagram - WINDOW -/With Interruption Detection Function

INFOID:0000000003777693

EL-WINDOW-01

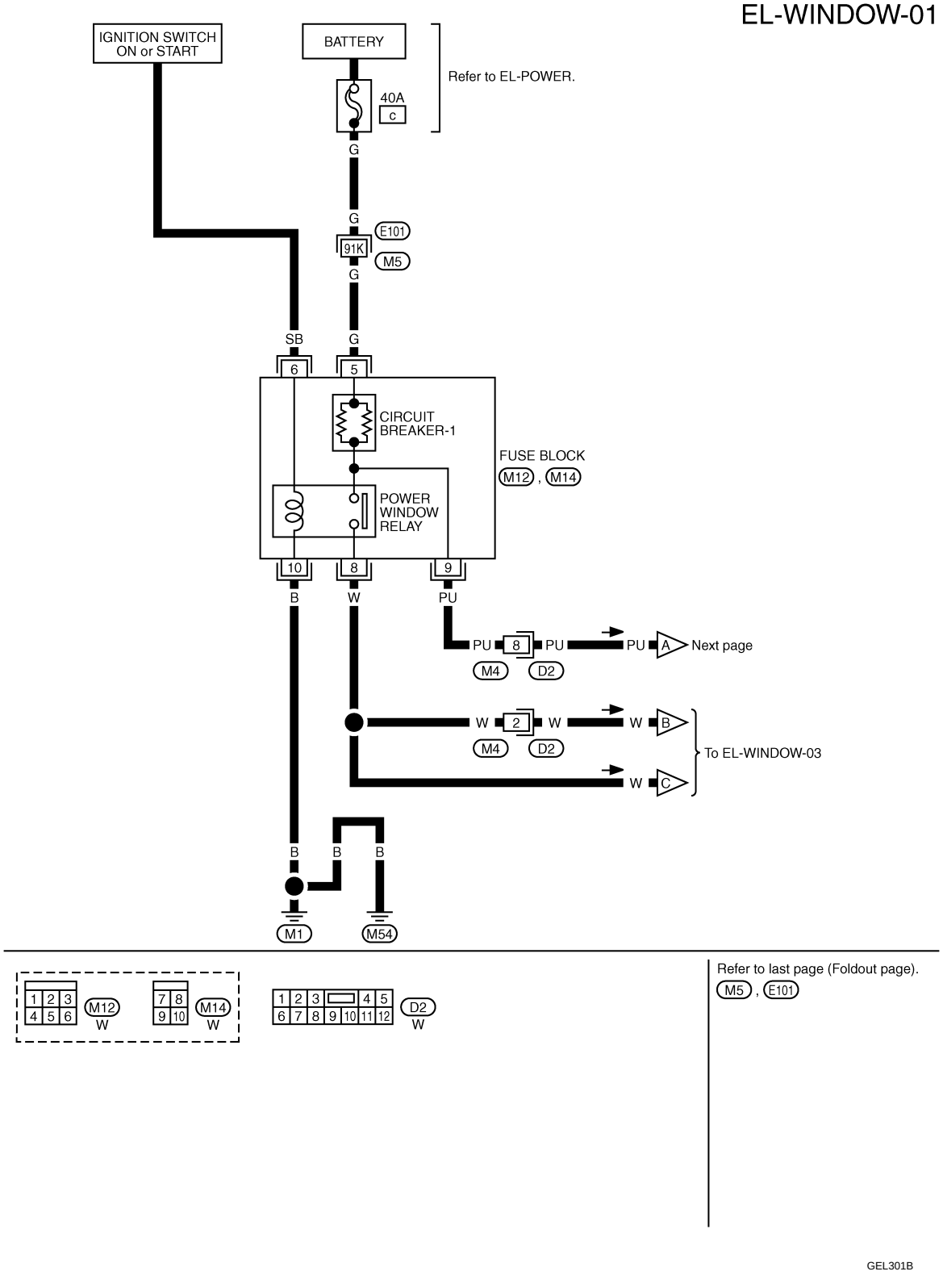

EL-WINDOW-02

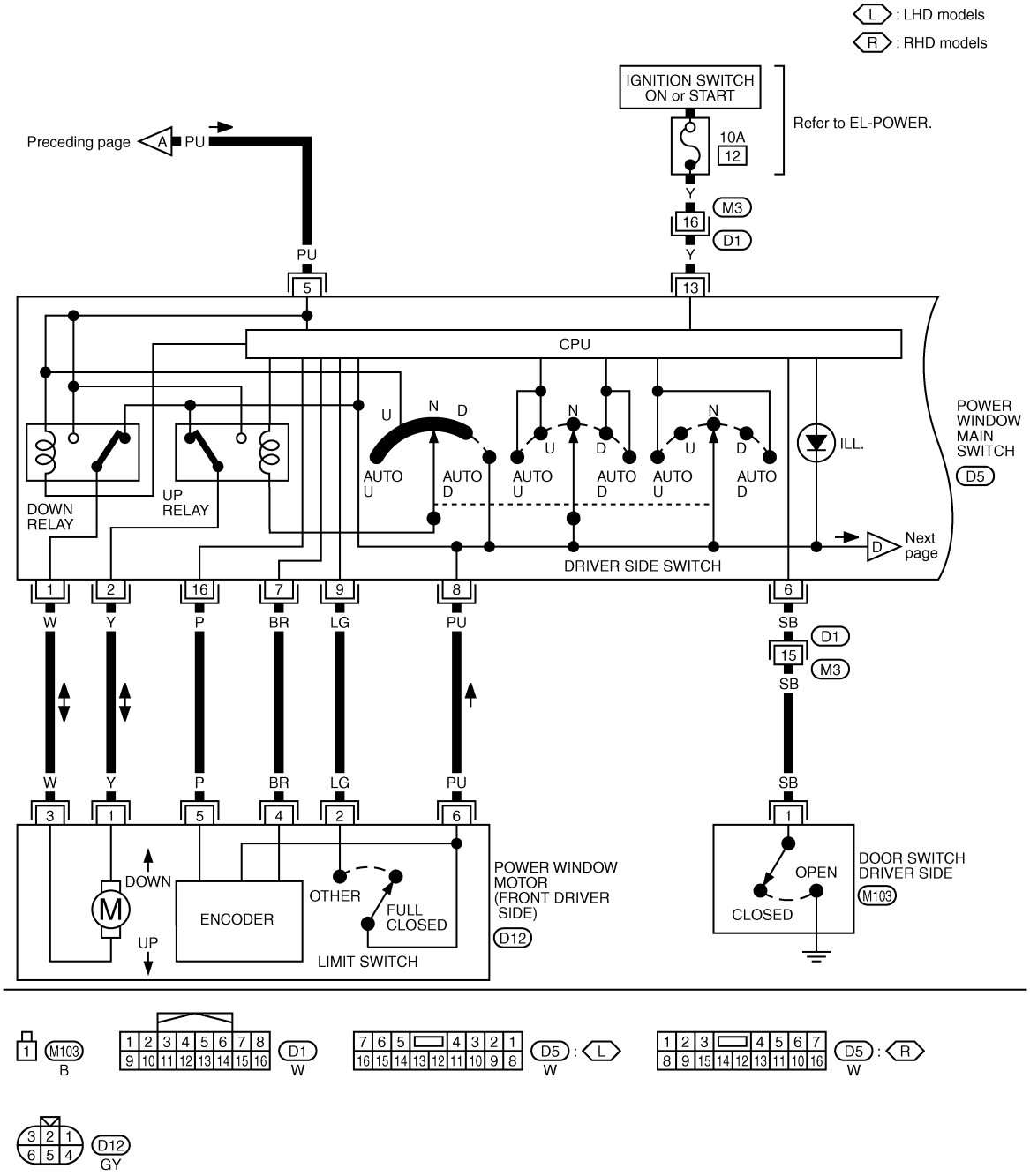
L : LHD models
R : RHD models
IGNITION SWITCH ON or START
10A
12
Refer to EL-POWER.
Preceding page
A
PU
Y
M3
16
D1
PU
5
13
CPU
U
N
D
AUTO U
AUTO D
ILL.
POWER WINDOW MAIN SWITCH
D5
DOWN RELAY
UP RELAY
DRIVER SIDE SWITCH
Next page
D
1
2
16
7
9
8
6
W
Y
P
BR
LG
PU
SB
D1
15
M3
3
1
5
4
2
6
DOWN
UP
M
ENCODER
OTHER
FULL CLOSED
LIMIT SWITCH
POWER WINDOW MOTOR (FRONT DRIVER SIDE)
D12
OPEN
CLOSED
DOOR SWITCH DRIVER SIDE
M103
B
W
GY
GEL302B

EL-WINDOW-03

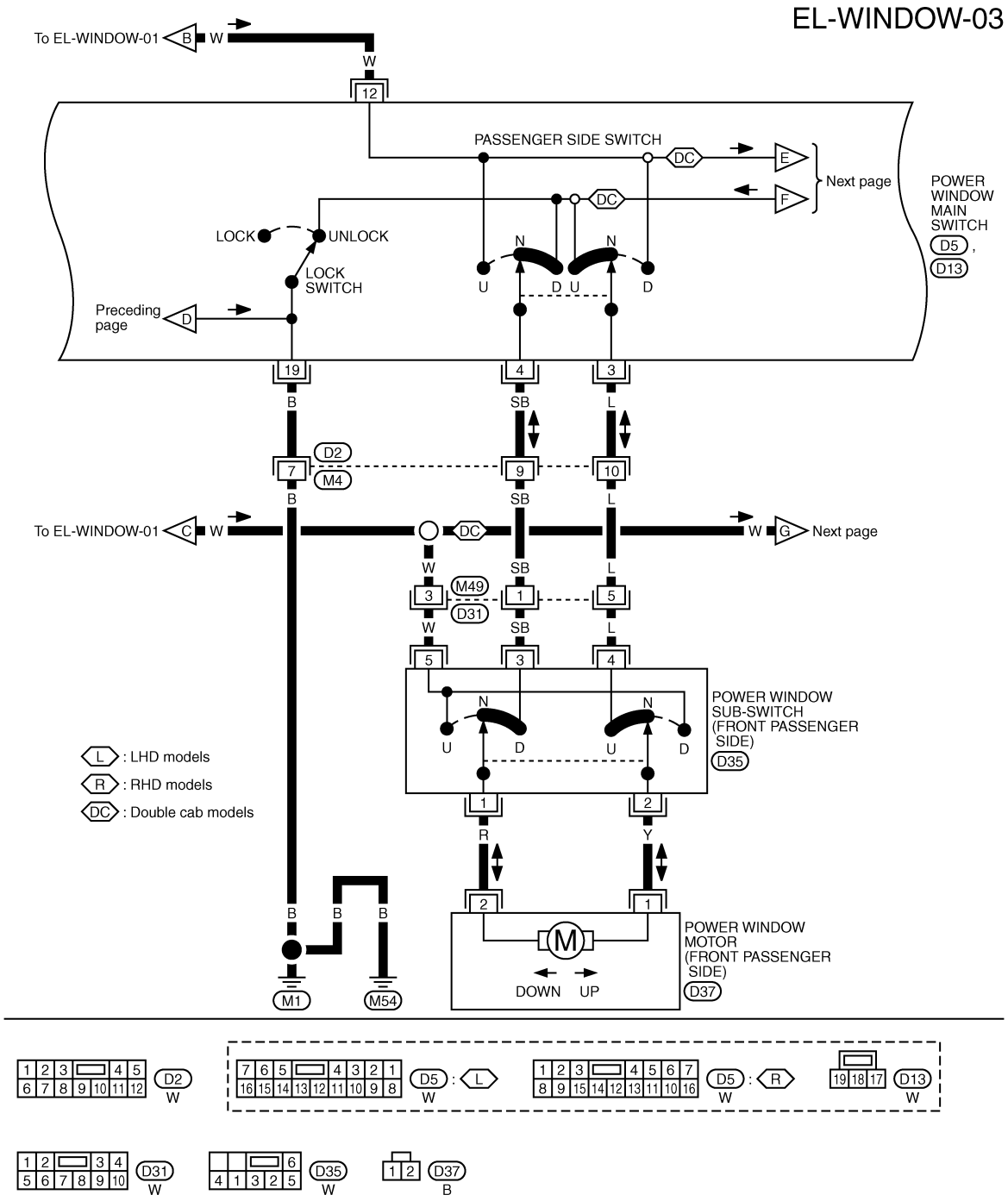
To EL-WINDOW-01
PASSENGER SIDE SWITCH
Next page
POWER WINDOW MAIN SWITCH
D5 , D13
LOCK
UNLOCK
LOCK SWITCH
Preceding page
To EL-WINDOW-01
Next page
POWER WINDOW SUB-SWITCH (FRONT PASSENGER SIDE)
D35
POWER WINDOW MOTOR (FRONT PASSENGER SIDE)
D37
DOWN
UP
L : LHD models
R : RHD models
DC : Double cab models
M1
M54
D2
M4
M49
D31
D5 : L
D5 : R
D13
GEL303B

EL-WINDOW-04

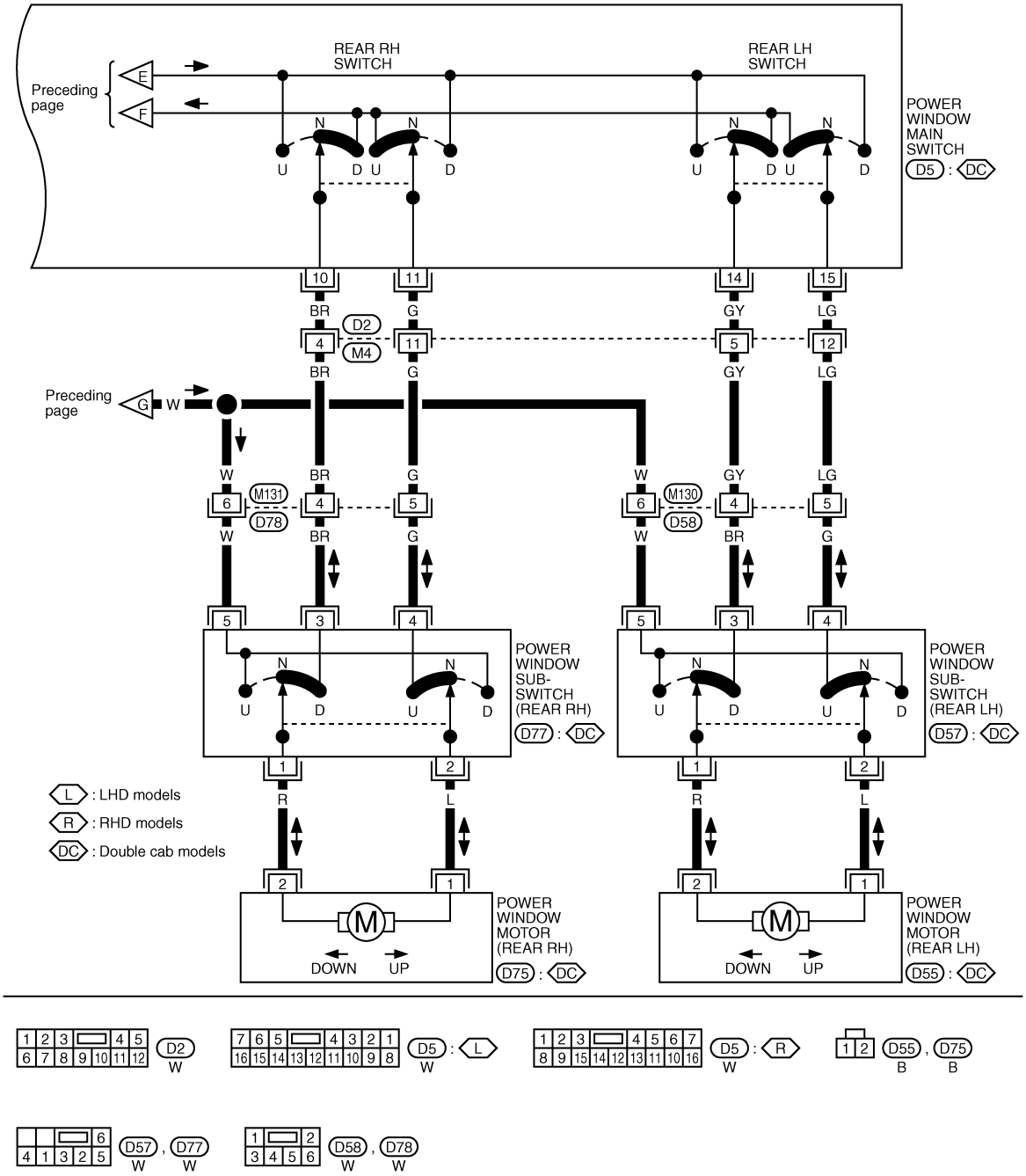
REAR RH SWITCH
REAR LH SWITCH
Preceding page
E
F
POWER WINDOW MAIN SWITCH
D5 : DC
D2
M4
M131
D78
M130
D58
POWER WINDOW SUB-SWITCH (REAR RH)
D77 : DC
POWER WINDOW SUB-SWITCH (REAR LH)
D57 : DC
L : LHD models
R : RHD models
DC : Double cab models
POWER WINDOW MOTOR (REAR RH)
D75 : DC
POWER WINDOW MOTOR (REAR LH)
D55 : DC
DOWN
UP
D5 : L
D5 : R
D55 , D75
D57 , D77
D58 , D78
GEL304B

POWER DOOR LOCK

Schematic

INFOID:0000000003777669

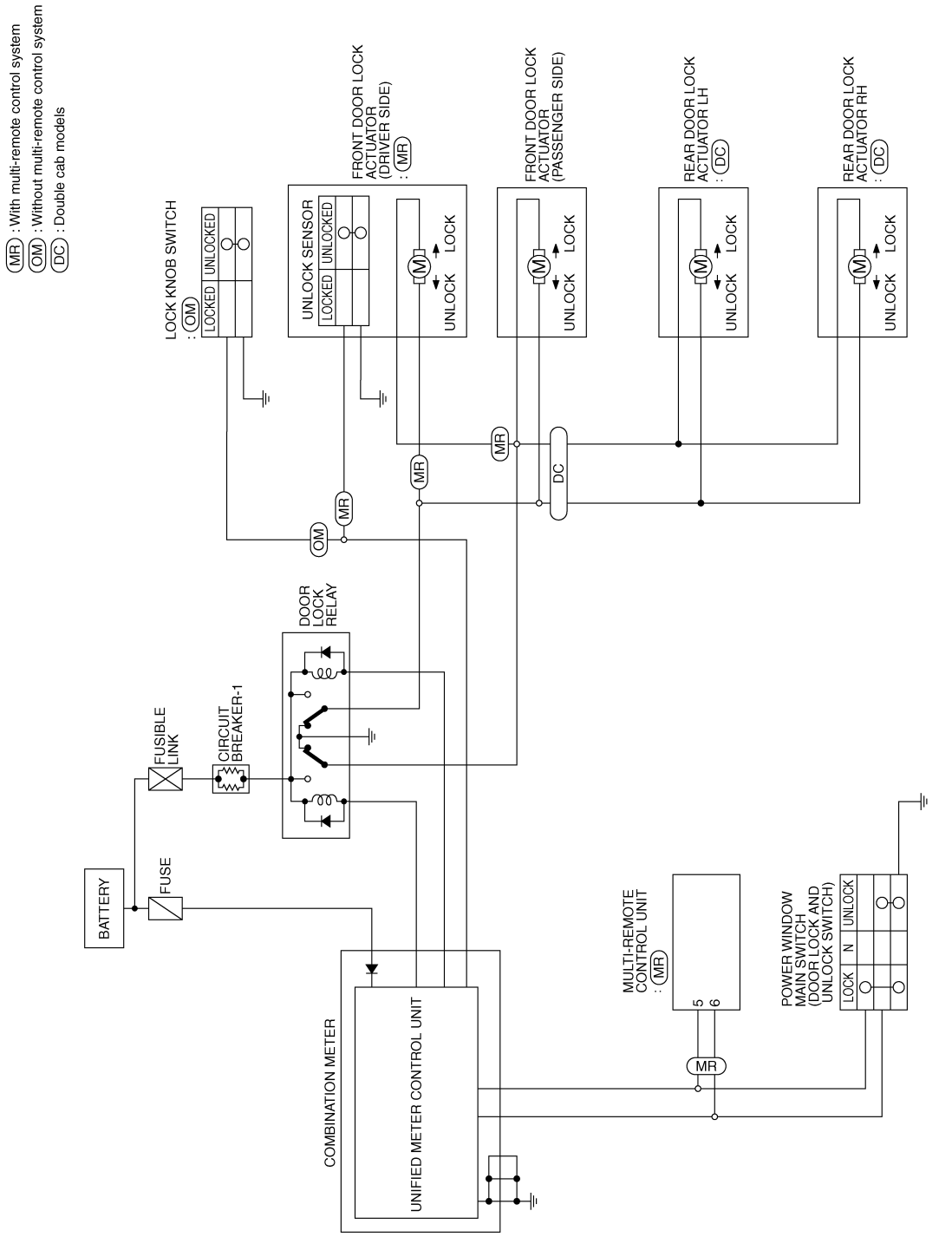

GEL305B

Wiring Diagram - D/LOCK -

INFOID:0000000003777670

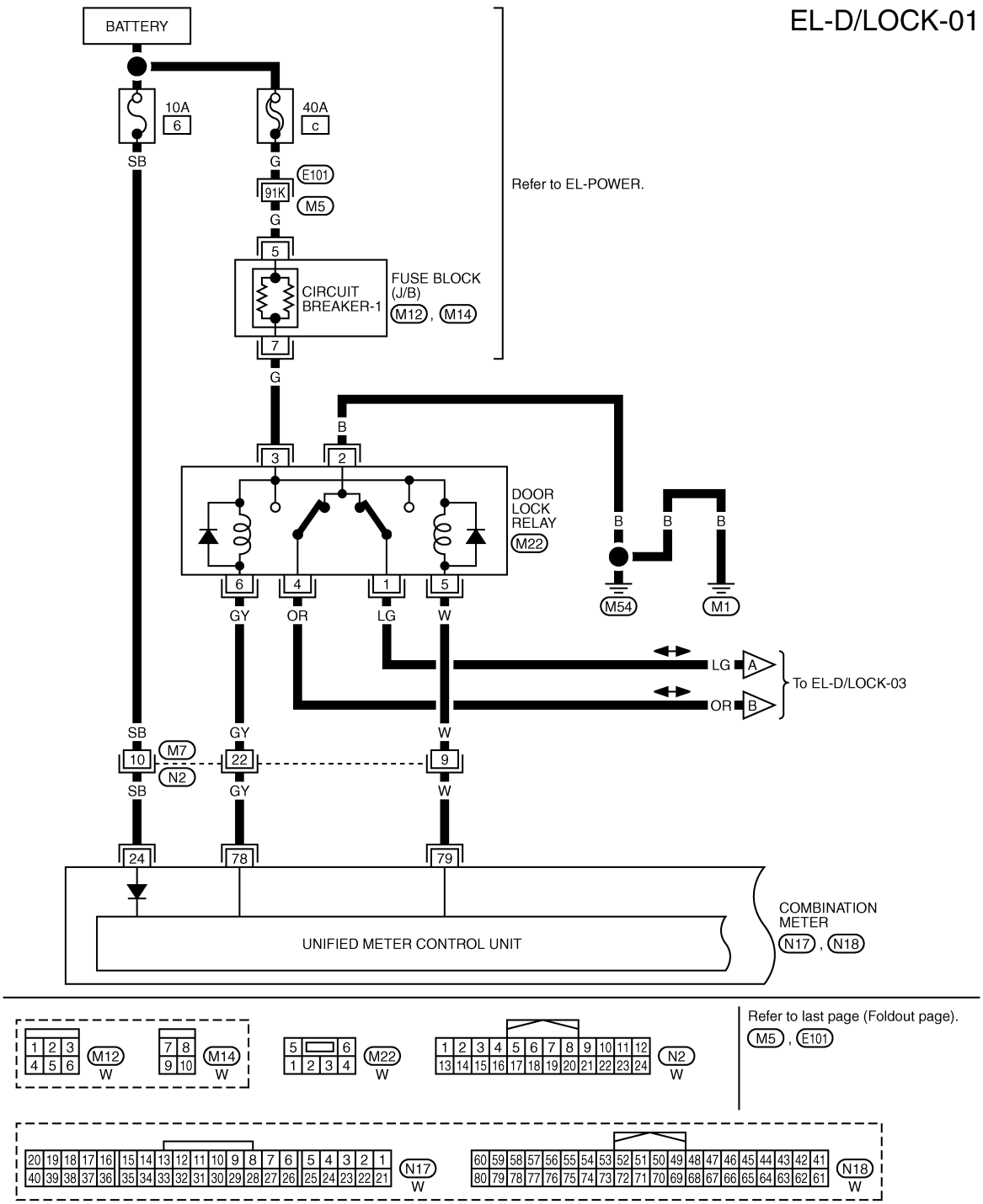

EL-D/LOCK-02

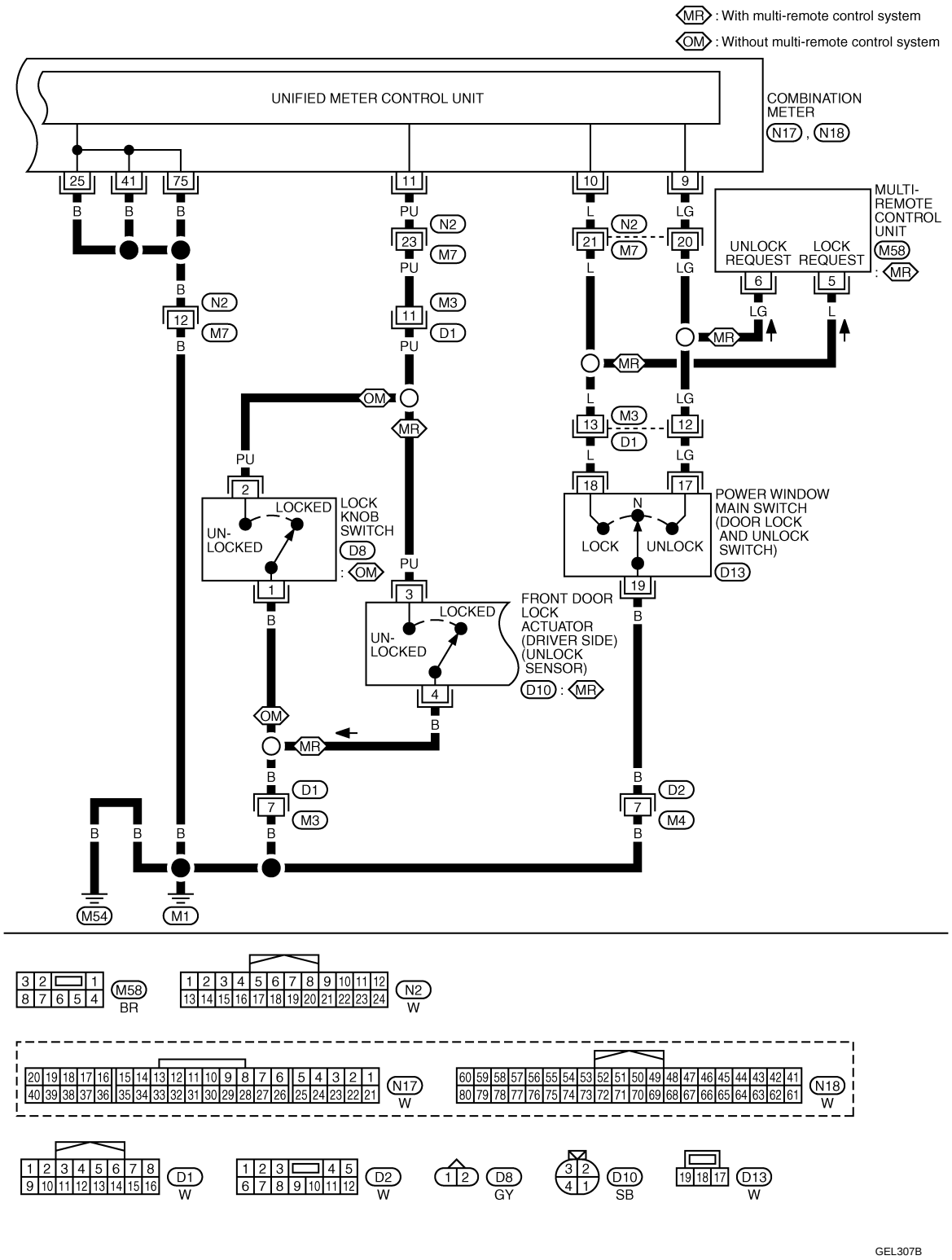
MR : With multi-remote control system
OM : Without multi-remote control system
UNIFIED METER CONTROL UNIT
COMBINATION METER
N17 , N18
MULTI-REMOTE CONTROL UNIT
M58
: MR
UNLOCK REQUEST
LOCK REQUEST
LOCK KNOB SWITCH
D8
: OM
LOCKED
UN-LOCKED
POWER WINDOW MAIN SWITCH (DOOR LOCK AND UNLOCK SWITCH)
D13
LOCK
UNLOCK
FRONT DOOR LOCK ACTUATOR (DRIVER SIDE) (UNLOCK SENSOR)
D10 : MR
M54
M1
M58
BR
N2
W
N17
W
N18
W
D1
W
D2
W
D8
GY
D10
SB
D13
W
GEL307B

EL-D/LOCK-03

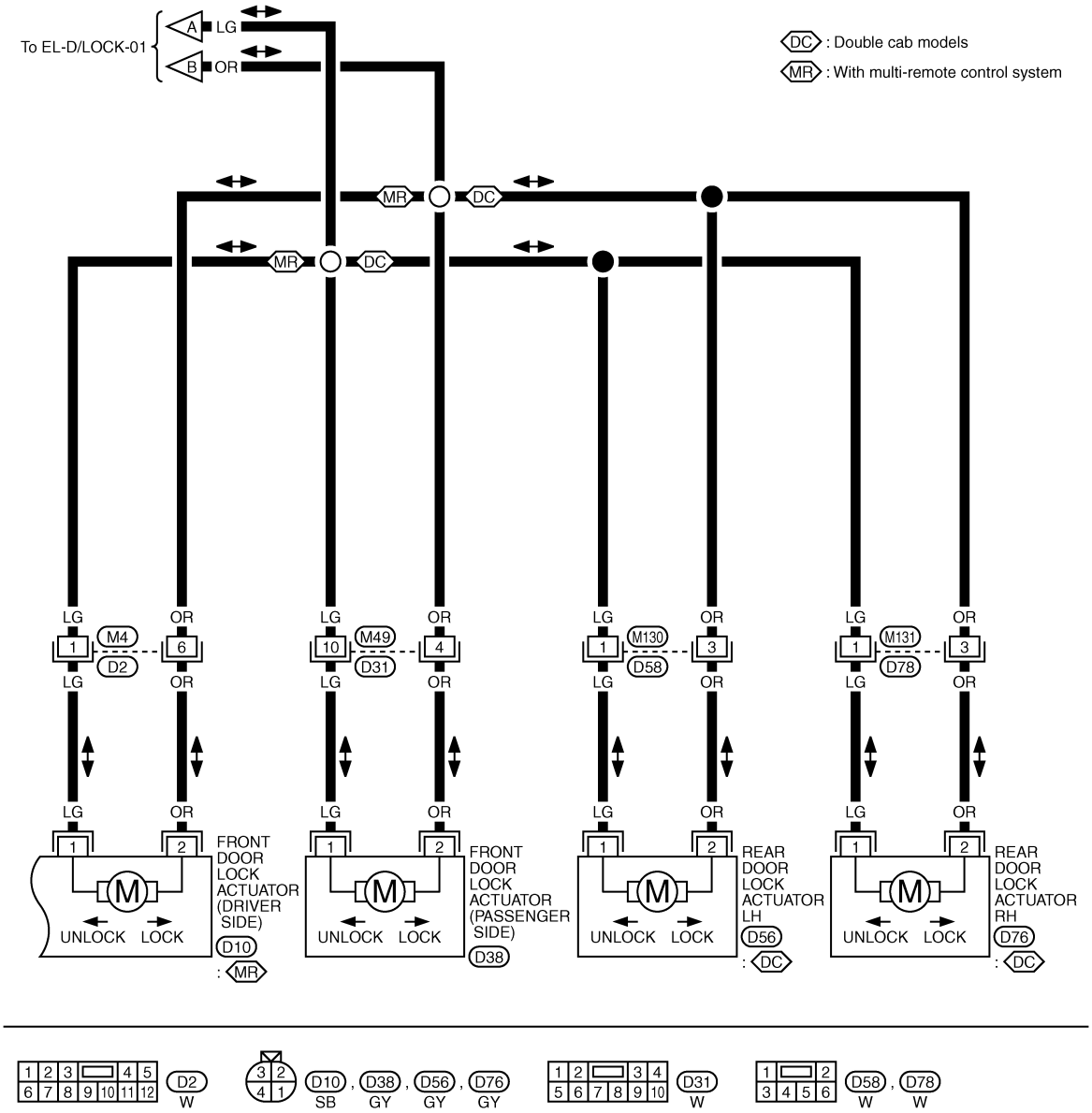

GEL308B

MULTI-REMOTE CONTROL SYSTEM

Wiring Diagram - MULTI -

INFOID:0000000003777730

EL-MULTI-01

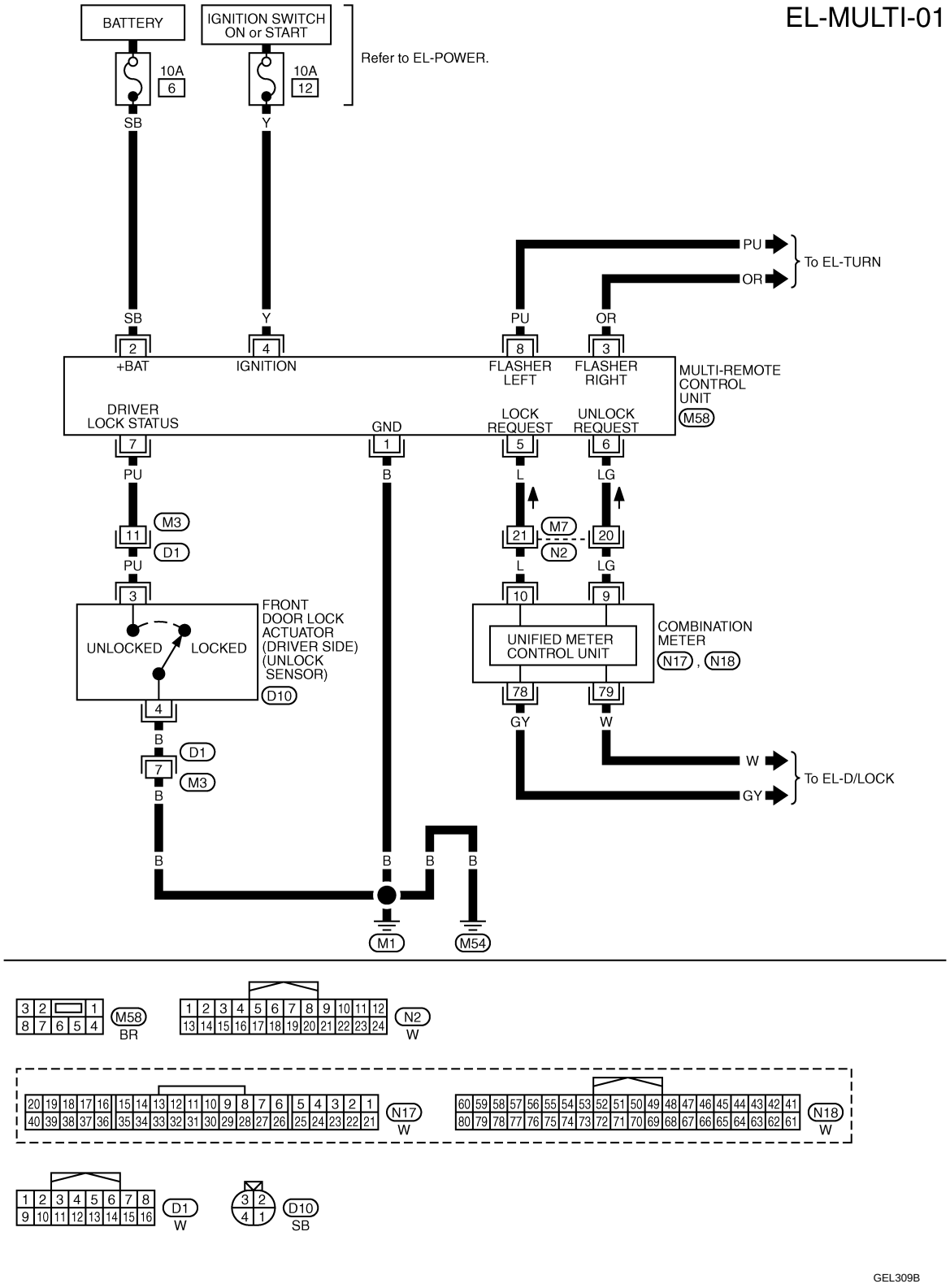

GEL309B

NATS (NISSAN ANTI-THEFT SYSTEM)

Component Parts and Harness Connector Location

INFOID:0000000003737140

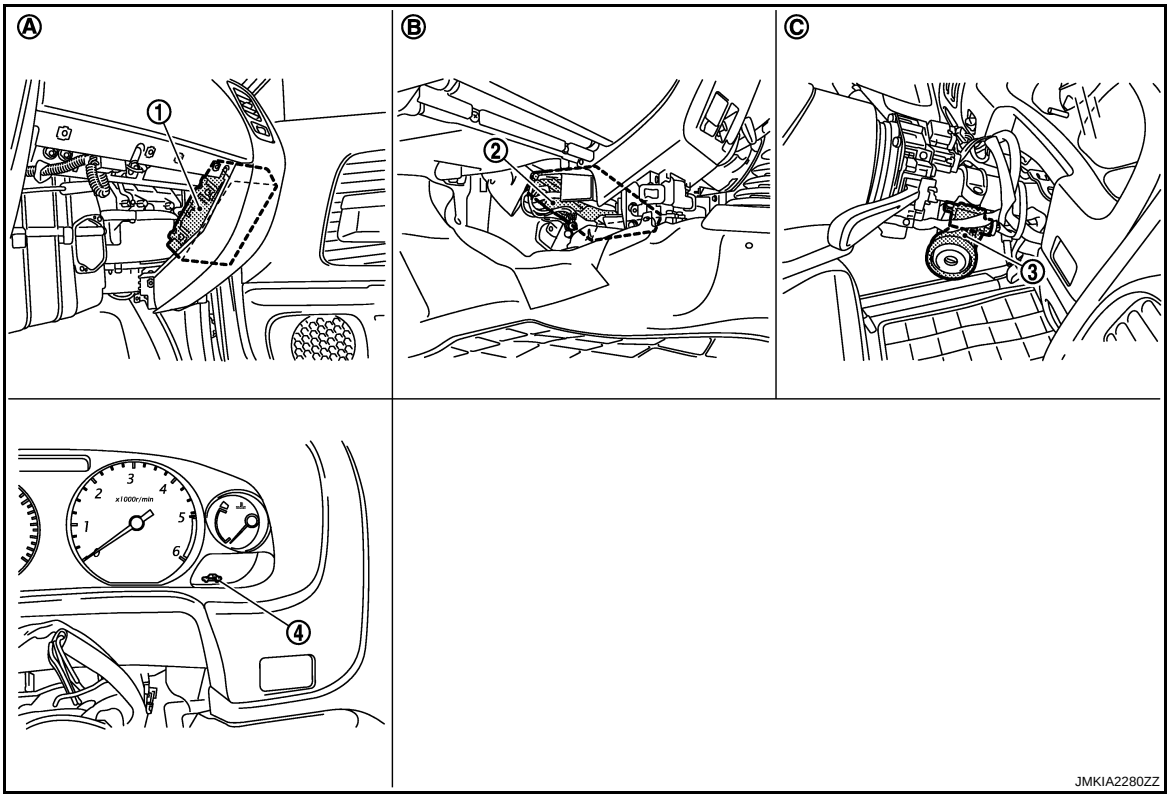

1. BCM M55, M56, M57
2. ECM M33
3. NATS antenna amp. M68
4. Combination meter (security indicator lamp) N17, N18

NOTE:
If customer reports a “No start” condition, request ALL KEYS to be brought to an NISSAN dealer in case of a NATS malfunction.

System Description

INFOID:0000000003737141

NATS (Nissan Anti-Theft System) has the following immobilizer functions:

- Since only NATS ignition keys, whose ID nos. have been registered into the ECM, BCM and NATS antenna amp., allow the engine to run, a vehicle operation without a registered key in NATS is prevented by NATS. That is to say, NATS will immobilize the engine if someone tries to start it without the registered key of NATS.
- This version of NATS has dongle unit to improve its anti-theft performance (RHD models). Dongle unit has its own ID which is registered into BCM. So if dongle unit is replaced, initialization must be performed.
- When malfunction of dongle unit is detected:
  The security indicator lamp illuminates for about 15 minutes after ignition switch is turned to ON.
  - When dongle unit has a malfunction and the indicator lamp is illuminated, engine cannot be started. However engine can be started only one time when security indicator lamp turns off in about 15 minutes after ignition switch is turned to ON.
- All of the originally supplied ignition key IDs have been NATS registered in NATS.
  If the vehicle owner requests, a maximum of four key IDs can be registered into the NATS components.
- The security indicator blinks when the ignition switch is in “OFF” or “ACC” position. Therefore, NATS warns outsiders that the vehicle is equipped with the anti-theft system.
- When NATS detects malfunction, the security indicator lamp lights up as follows.

Condition IGN ON and	With dongle	Without dongle
	Security indicator	Security indicator
NATS malfunction (except dongle unit) is detected	1. 6 times blinking 2. Staying ON after ignition switch is turned ON.	Staying ON
Only malfunction of dongle unit is detected.	Staying ON for about 15 minutes after ignition switch is turned ON.	—
Malfunction of NATS and engine related parts are detected.	1. 6 times blinking 2. Staying ON after ignition switch is turned ON.	Staying ON
Only engine related part malfunction is detected.	—	—
Just after initialization of NATS	6 times blinking	—

- NATS trouble diagnoses, system initialization and additional registration of other NATS ignition key IDs must be performed using CONSULT-III.
  Regarding the procedures of NATS initialization and NATS ignition key ID registration, refer to CONSULT-III operation manual NATS-IVIS/NVIS.
- **When servicing a malfunction of the NATS (indicated by lighting up of Security Indicator Lamp) or registering another NATS ignition key ID no., it may be necessary to re-register original key identification. Therefore, be sure to receive ALL KEYS from vehicle owner.**

System Composition

INFOID:0000000003737142

The immobilizer function of the NATS consists of the following:
- NATS ignition key
- NATS antenna amp. located in the ignition key cylinder
- BCM (Body Control Module)
- Engine control module (ECM)
- Dongle unit (RHD models)
- Security indicator lamp

NOTE:
The communication between ECM and BCM uses the CAN communication system.

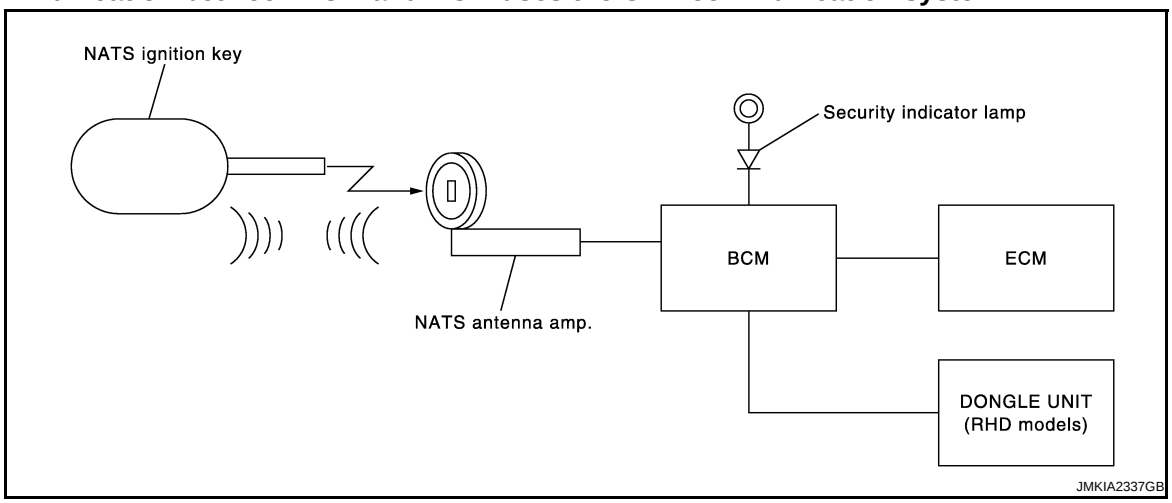

ECM Re-communicating Function

INFOID:0000000003737143

Performing following procedure can automatically perform re-communication of ECM and BCM, but only when the ECM has been replaced with a new one (*1).
*1: New one means a virgin ECM which has never been energized on-board.
(In this step, initialization procedure by CONSULT-III is not necessary)
NOTE:
- **When registering new Key IDs or replacing the ECM other than brand new, refer to CONSULT-III Operation Manual NATS-IVIS/NVIS.**
- **If multiple keys are attached to the key holder, separate them before work.**
- **Distinguish keys with unregistered key ID from those with registered ID.**

1. Install ECM.
2. Using a registered key (*2), turn ignition switch to “ON”.
   *2: To perform this step, use the key (except for card plate key) that has been used before performing ECM replacement.
3. Maintain ignition switch in “ON” position for at least 5 seconds.
4. Turn ignition switch to “OFF”.
5. Start engine.
   If engine can be started, procedure is completed.
   If engine cannot be started, refer to CONSULT-III Operation Manual NATS-IVIS/NVIS and initialize control unit.

Wiring Diagram - NATS -

INFOID:0000000003737144

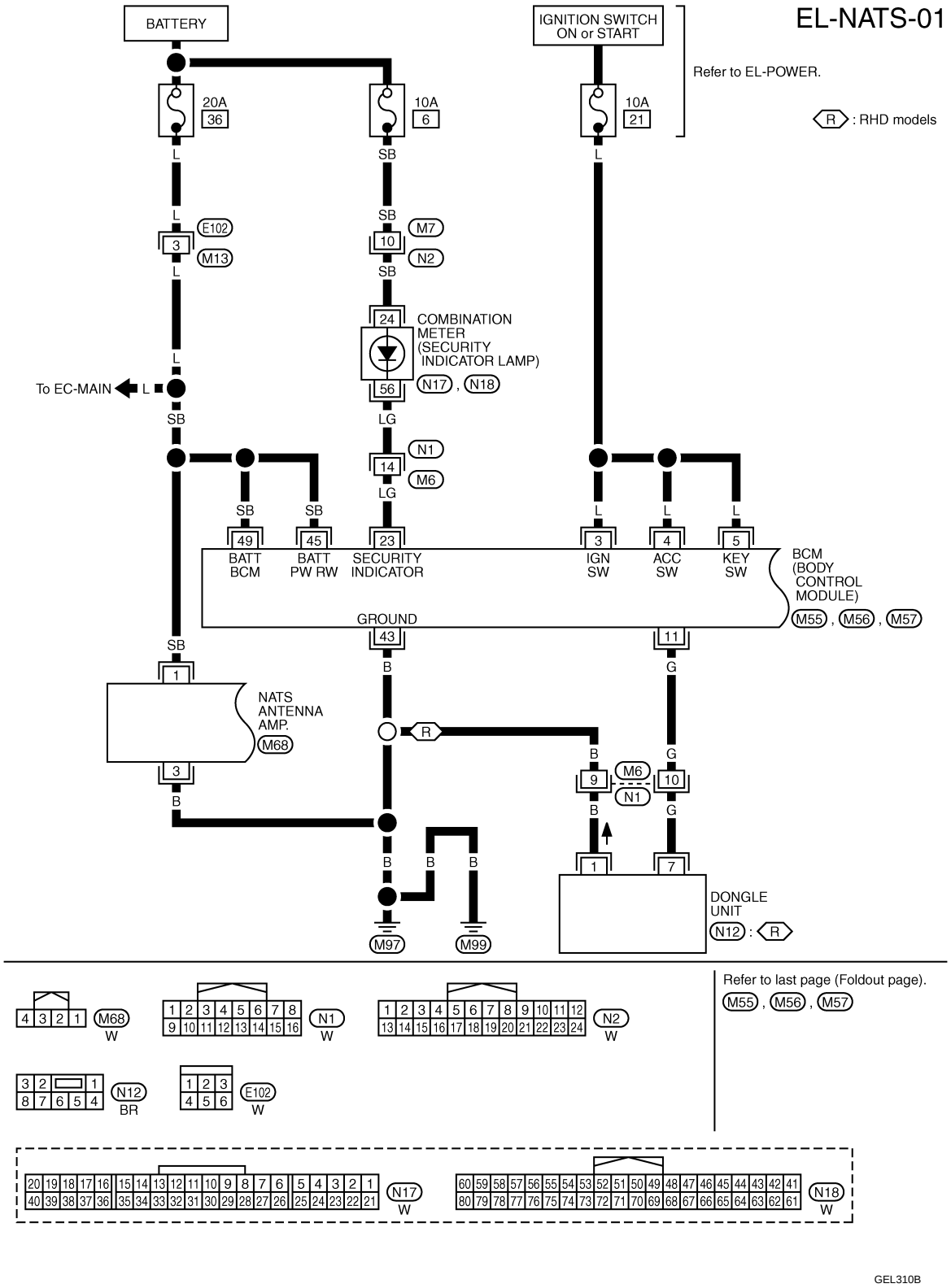

EL-NATS-02

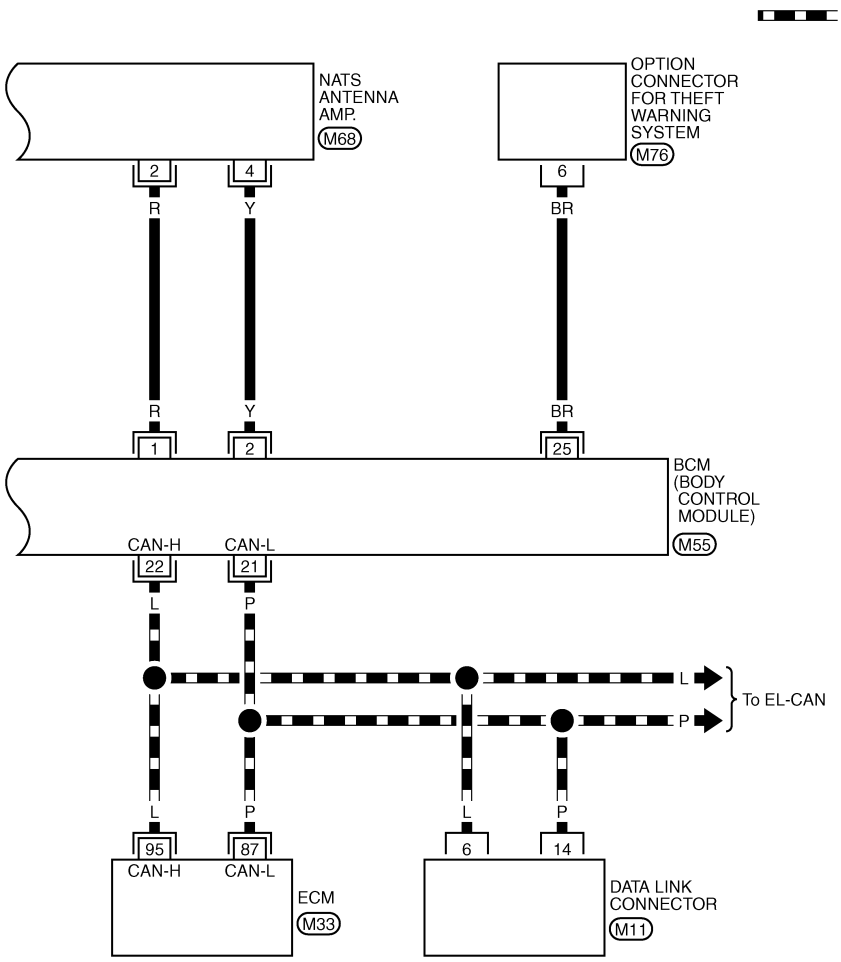

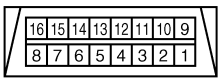

M11
W

M68
W

M76
W

Refer to last page (Foldout page).
M33
M55

GEL311B

Terminal and Reference Value for BCM

INFOID:0000000003737145

Terminal	Wire Color	Item	Condition	Voltage [V] (Approx.)
1	R	NATS antenna amp.	Ignition switch (OFF → ON)	Just after turning ignition switch “ON”: Pointer of tester should move.
2	Y	NATS antenna amp.	Ignition switch (OFF → ON)	Just after turning ignition switch “ON”: Pointer of tester should move.
3	L	Ignition switch (ON or START)	Ignition switch (ON or START position)	Battery voltage
4	L	Ignition switch (ON or START)	Ignition switch (ON or START position)	Battery voltage
5	L	Ignition switch (ON or START)	Ignition switch (ON or START position)	Battery voltage
21	P	CAN-L	—	—
22	L	CAN-H	—	—
23	LG	Security indicator lamp	Goes OFF → illuminates (Every 2.6 seconds)	Battery voltage → 0
43	B	Ground	—	0
45	SB	Power source (Fuse)	—	Battery voltage
49	SB	Power source (Fuse)	—	Battery voltage

CONSULT-III Function

INFOID:0000000003737146

SELF-DIAGNOSTIC RESULTS ITEM CHART for ECM

Display contents of CONSULT-III	Description	Reference page
LOCK MODE [P1610]	When the starting operation is carried out five or more times consecutively under the following conditions, NATS will shift the mode to one which prevents the engine from being started. • Unregistered ignition key is used. • BCM or ECM’s malfunctioning.	EL-102
ID DISCORD, IMM-ECM [P1611]	The result of ID verification between BCM and ECM is NG. System initialization is required.	EL-103
CHAIN OF ECM-IMMU [P1612]	Communication impossible between ECM and BCM In rare case, “CHAIN OF ECM-IMMU” might be stored during key registration procedure, even if the system is not malfunctioning.	EL-103
CHAIN OF IMMU-KEY [P1614]	BCM cannot receive the key ID signal.	EL-105
DIFFERENCE OF KEY [P1615]	BCM can receive the key ID signal but the result of ID verification between key ID and BCM is NG.	EL-106
ECM [P1616]	ECM ROM is malfunctioning.	EL-106

NOTE:
If some DTCs are displayed at the same time, perform inspections one by one based on the priority chart. Refer to EC-44, "DTC Inspection Priority Chart".

SELF-DIAGNOSTIC RESULTS ITEM CHART for BCM

Display contents of CONSULT-III	Description	Reference page
CAN COMM CIRCUIT [U1000]	When BCM cannot communicate CAN communication signal continuously for 2 seconds or more.	EL-118

Trouble Diagnosis Procedure

INFOID:0000000003737147

WORK FLOW

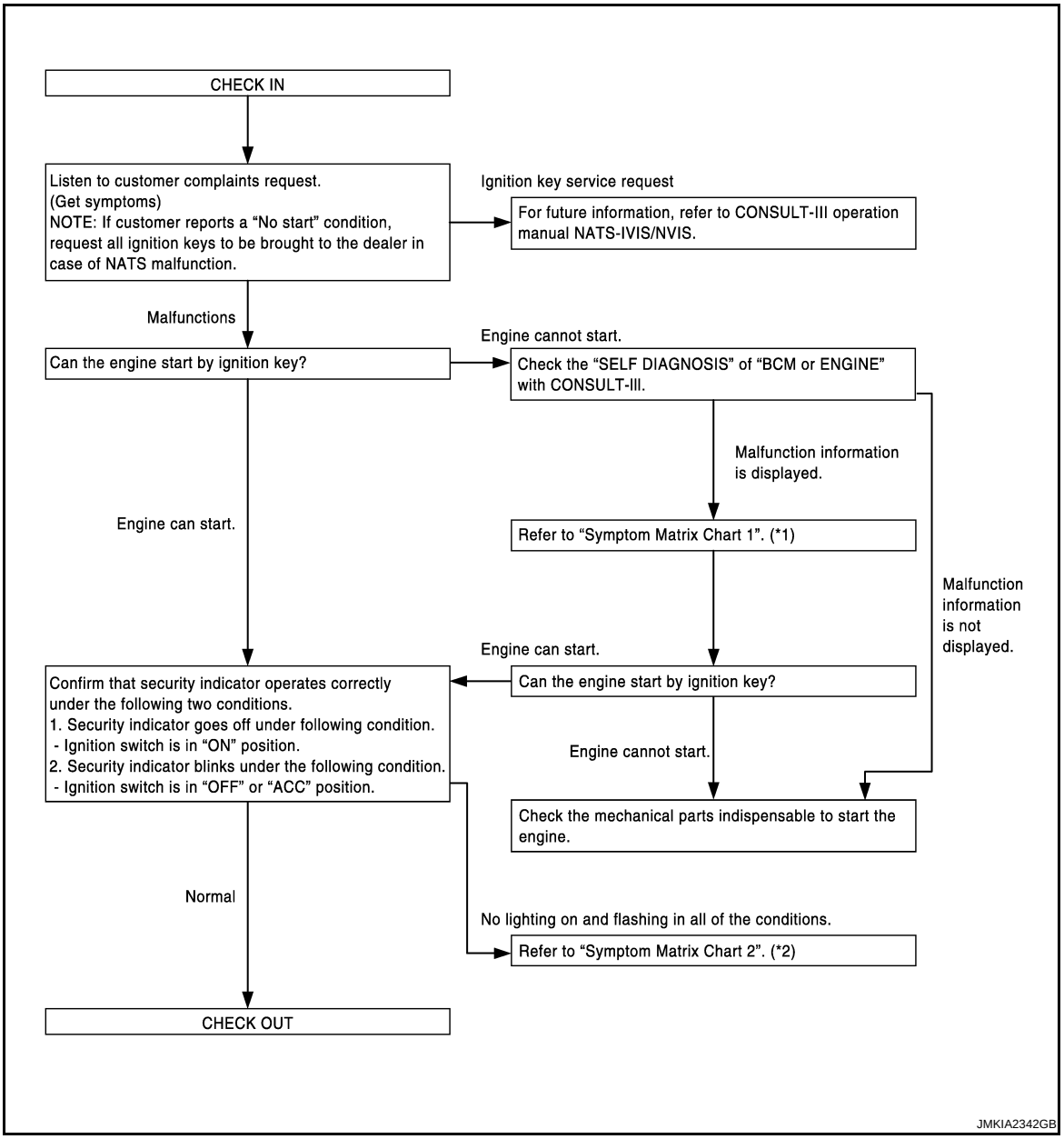

*1: EL-102 *2: EL-102

Symptom Matrix Chart 1

INFOID:0000000003737148

Self-diagnosis related item

Symptom	Display contents of CONSULT-III	System (Malfunctioning part or mode)	Reference page
• Security indicator lamp lighting up* • Engine cannot be started	CHAIN OF ECM-IMMU [P1612]	In rare case, “CHAIN OF ECM-IMMU” might be stored during key registration procedure, even if the system is not malfunctioning.	EL-103
		Open circuit in battery voltage line of BCM circuit	
		Open circuit in ignition line of BCM circuit	
		Open circuit in ground line of BCM circuit	
		Open or short circuit between BCM and ECM communication line	
		ECM	
		BCM	
	DIFFERENCE OF KEY [P1615]	Unregistered key	EL-106
		BCM	
	CHAIN OF IMMU-KEY [P1614]	Malfunction of key ID chip	EL-105
		Communication line between NATS antenna amp. and BCM: Open circuit or short circuit of battery voltage line or ground line	
		Open circuit in power source line of NATS antenna amp. circuit	
		Open circuit in ground line of NATS antenna amp. circuit	
		NATS antenna amp.	
		BCM	
	ID DISCORD, IMM-ECM [P1611]	System initialization has not yet been completed.	EL-103
		ECM	
	ECM [P1616]	ECM	EL-106
• Security indicator lamp lighting up* • Engine cannot be started	LOCK MODE [P1610]	When the starting operation is carried out five or more times consecutively under the following conditions, NATS will shift the mode to one which prevents the engine from being started. • Unregistered ignition key is used. • BCM or ECM’s malfunctioning.	EL-102

*: When NATS detects trouble, the security indicator lamp lights up while ignition key is in the “ON” position.

Symptom Matrix Chart 2

INFOID:0000000003804976

Non self-diagnosis related item

SYMPTOM	SYSTEM (Malfunctioning part or mode)	Reference page
Security indicator lamp does not light up*.	Security indictor lamp	EL-107
	Open circuit between fuse and BCM	
	BCM	

*: CONSULT-III self-diagnostic results display screen “no malfunction is detected”.

P1610 LOCK MODE

INFOID:0000000003737154

1. CONFIRM SELF-DIAGNOSTIC RESULTS

Confirm SELF-DIAGNOSTIC RESULTS “LOCK MODE” is displayed on CONSULT-III screen.

Is the DTC displayed?

YES >> GO TO 2.

NO >> INSPECTION END

2. ESCAPE FROM LOCK MODE

1. Turn ignition switch OFF.
2. Turn ignition switch ON with registered key. (Do not start engine.) Wait 5 seconds.
3. Return the key to OFF position. Wait 5 seconds.
4. Repeat steps 2 and 3 twice (total of three cycles).
5. Start the engine.

Does engine start?

YES >> System is OK (Now system is escaped from “LOCK MODE”).
NO >> GO TO 3.

3. PERFORM INITIALIZATION WITH CONSULT-III

Perform initialization with CONSULT-III.
For initialization, refer to “CONSULT-III Operation Manual NATS-IVIS/NVIS”.

NOTE:
If the initialization is not completed or malfunctions, CONSULT-III shows the message on the screen.

Can the system be initialized?

YES >> System is OK.
NO >> GO TO 4.

4. PERFORM INITIALIZATION WITH CONSULT-III AGAIN

1. Replace BCM.
2. Perform initialization with CONSULT-III.
   For initialization, refer to “CONSULT-III Operation Manual NATS-IVIS/NVIS”.

NOTE:
If the initialization is not completed or malfunctions, CONSULT-III shows the message on the screen.

Can the system be initialized?

YES >> INSPECTION END
NO >> Replace ECM.
- Perform initialization with CONSULT-III
- For initialization, refer to “CONSULT-III Operation Manual NATS-IVIS/NVIS”

P1611 ID DISCORD, IMMU-ECM

INFOID:0000000003737152

1. CONFIRM SELF-DIAGNOSTIC RESULTS

Confirm SELF-DIAGNOSTIC RESULTS “ID DISCORD, IMM-ECM” displayed on CONSULT-III screen.

NOTE:
“ID DISCORD IMM-ECM”
Registered ID of BCM is in discord with that of ECM.

Is the DTC displayed?

YES >> GO TO 2.
NO >> INSPECTION END

2. PERFORM INITIALIZATION WITH CONSULT-III

Perform initialization with CONSULT-III. Re-register all NATS ignition key IDs.
For initialization, refer to “CONSULT-III Operation Manual NATS-IVIS/NVIS”.

Can the system be initialized?

YES >> INSPECTION END
NO >> Replace ECM. Refer to EC-22, "Procedure After Replacing ECM".

P1612 CHAIN OF ECM-IMMU

INFOID:0000000003737149

1. CONFIRM SELF-DIAGNOSTIC RESULTS

Confirm SELF-DIAGNOSTIC RESULTS “CHAIN OF ECM-IMMU” displayed on CONSULT-III screen.

NOTE:
In rare case, “CHAIN OF ECM-IMMU” might be stored during key registration procedure, even if the system is not malfunctioning.

Is the DTC displayed?

YES >> GO TO 2.
NO >> INSPECTION END

2. CHECK POWER SUPPLY CIRCUIT FOR BCM

1. Turn ignition switch OFF.
2. Disconnect BCM connector.
3. Check voltage between BCM harness connector and ground.

Connector	Terminals		Voltage (V) (Approx.)
	(+)	(-)	
M56	45	Ground	Battery voltage
	49		

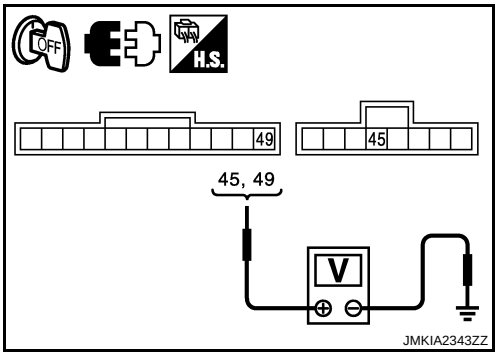

Is the inspection result normal?

YES >> GO TO 3.
NO >> Check the following.
- 20A fuse (No.36, located in the fuse and fusible link box)
- Harness for open or short between fuse and BCM

3. CHECK IGNITION SWITCH ON SIGNAL

1. Turn ignition switch ON.
2. Check voltage between BCM harness connector and ground.

3 – Ground : Battery voltage
4 – Ground : Battery voltage
5 – Ground : Battery voltage

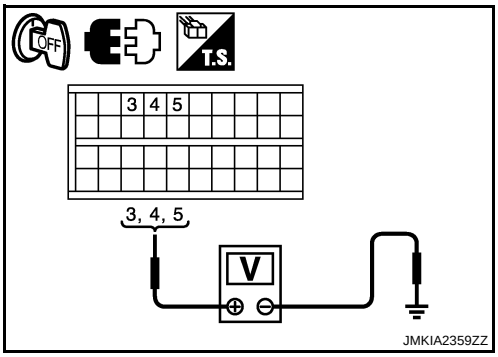

Is the inspection result normal?

YES >> GO TO 4.
NO >> Check the following.
- 10A fuse (No. 21, located in the fuse and fusible link box)
- Harness for open or short between fuse and BCM

4. CHECK GROUND CIRCUIT FOR BCM

1. Turn ignition switch OFF.
2. Check continuity between BCM harness connector and ground.

43 – Ground : Continuity should exist.

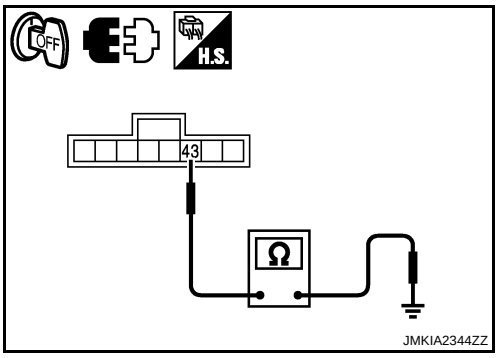

Is the inspection result normal?

YES >> GO TO 5.
NO >> Repair or replace BCM ground circuit.

5. REPLACE BCM

1. Replace BCM.
2. Perform initialization with CONSULT-III.
   For initialization, refer to “CONSULT-III Operation Manual NATS-IVIS/NVIS”.

Does the engine start?

YES >> INSPECTION END
NO >> Replace ECM. Refer to EC-22, "Procedure After Replacing ECM".

P1614 CHAIN OF IMMU-KEY

INFOID:0000000003737151

1. CONFIRM SELF-DIAGNOSTIC RESULTS

Confirm SELF-DIAGNOSTIC RESULTS “CHAIN OF IMMU-KEY” displayed on CONSULT-III screen.

Is the DTC displayed?

YES >> GO TO 2.
NO >> INSPECTION END

2. CHECK NATS ANTENNA AMP. INSTALLATION

Check NATS antenna amp. installation. Refer to EL-107, "Removal and Installation of NATS Antenna Amp".

Is the inspection result normal?

YES >> GO TO 3.
NO >> Reinstall NATS antenna amp. correctly.

3. CHECK NATS IGNITION KEY

Start engine with another registered NATS ignition key.

Does the engine start?

YES >> Ignition key ID chip is malfunctioning.
- Replace the ignition key
- Perform initialization with CONSULT-III
  For initialization, refer to “CONSULT-III Operation Manual NATS-IVIS/NVIS”

NO >> GO TO 4.

4. CHECK POWER SUPPLY FOR NATS ANTENNA AMP.

1. Turn ignition switch OFF.
2. Check voltage between NATS antenna amp. harness connector and ground.

Connector	Terminals		Voltage (V) (Approx.)
	(+)	(-)	
M68	1	Ground	Battery voltage

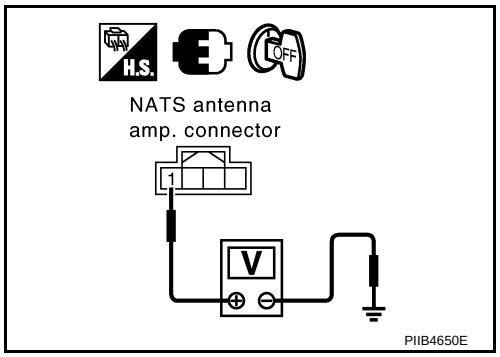

Is the inspection result normal?

YES >> GO TO 5.
NO >> Check the following.
- 20A fuse (No. 36, located in fuse and fusible link box)
- Harness for open or short between fuse and NATS antenna amp.

5. CHECK NATS ANTENNA AMP. SIGNAL LINE- 1

Check voltage between NATS antenna amp. harness connector and ground with analogue tester.

Con-nector	Terminals		Condition	Voltage (V) (Approx.)
	(+)	(-)		
M68	2	Ground	Before turning ignition switch “ON”	0
			Just after turning ignition switch “ON”	Pointer of tester should move

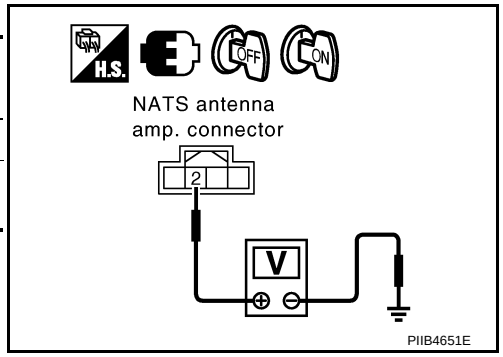

Is the inspection result normal?

YES >> GO TO 6.
NO >> Check harness for open or short between NATS antenna amp. and BCM. If harness is OK, replace BCM, perform initialization with CONSULT-III. For initialization, refer to “CONSULT-III Operation Manual NATS-IVIS/NVIS”.

6. CHECK NATS ANTENNA AMP. SIGNAL LINE- 2

Check voltage between NATS antenna amp. harness connector and ground with analogue tester.

Con-nector	Terminals (+)	Terminals (-)	Condition	Voltage [V] (Approx.)
M68	4	Ground	Before turning ignition switch “ON”	0
			Just after turning ignition switch “ON”	Pointer of tester should move

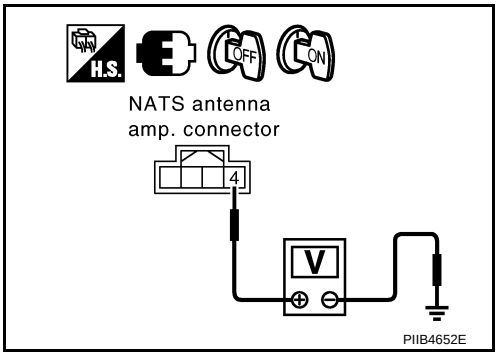

Is the inspection result normal?

YES >> GO TO 7.
NO >> Check harness for open or short between NATS antenna amp. and BCM. If harness is OK, replace BCM. Perform initialization with CONSULT-III. For initialization, refer to “CONSULT-III Operation Manual NATS-IVIS/NVIS”

7. CHECK NATS ANTENNA AMP. GROUND LINE CIRCUIT

1. Turn ignition switch OFF.
2. Disconnect NATS antenna amp. connector.
3. Check continuity between NATS antenna amp. harness connector and ground.

3 – Ground : Continuity should exist.

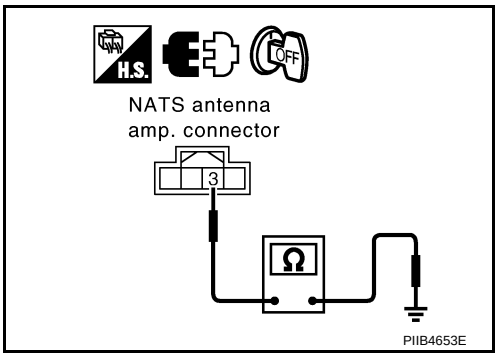

Is the inspection result normal?

YES >> Replace NATS antenna amp. Refer to EL-107, "Removal and Installation of NATS Antenna Amp".
NO >> Repair or replace NATS antenna amp. ground circuit.

P1615 DIFFERENCE OF KEY

INFOID:0000000003737150

1. CONFIRM SELF-DIAGNOSTIC RESULTS

Confirm SELF-DIAGNOSTIC RESULTS “DIFFERENCE OF KEY” displayed on CONSULT-III screen.

Is the DTC displayed?

YES >> GO TO 2.
NO >> INSPECTION END

2. PERFORM INITIALIZATION WITH CONSULT-III

Perform initialization with CONSULT-III. Re-register all NATS ignition key IDs.
For initialization and registration of NATS ignition key IDs, refer to “CONSULT-III Operation Manual NATS-IVIS/NVIS”.

NOTE:
If the initialization is not completed or malfunctions, CONSULT-III shows message on the screen.

Can the system be initialized and can the engine be started with re-registered NATS ignition key?

YES >> INSPECTION END
NO >> Replace BCM.
- Perform initialization with CONSULT-III
- For initialization, refer to “CONSULT-III Operation Manual NATS-IVIS/NVIS”

P1616 ECM

INFOID:0000000003737155

1. REPLACE ECM

1. Replace ECM.
2. Perform registration of NATS. Refer to EL-96, "ECM Re-communicating Function".
3. Perform EC-22, "Procedure After Replacing ECM".

>> INSPECTION END

Check Security Indicator Lamp

INFOID:0000000003737153

1. SECURITY INDICATOR LAMP ACTIVE TEST

With CONSULT-III

Check “THEFT IND” in “ACTIVE TEST” mode with CONSULT-III.

Without CONSULT-III

1. Turn ignition switch OFF.
2. Check voltage between combination meter (security indicator lamp) harness connector and ground.

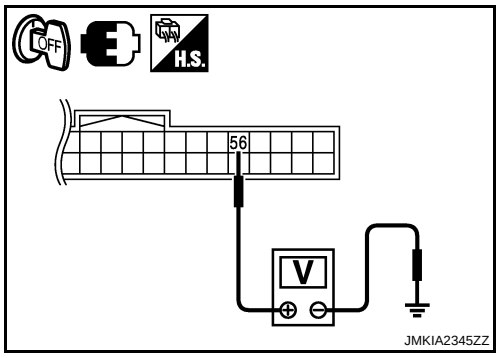

Connector	Terminal		Security indicator lamp condition	Voltage (V) (Approx.)
	(+)	(-)		
N18	56	Ground	Illuminated	0
			Not illuminated	Battery voltage

Is the inspection result normal?

YES >> Security indicator lamp is OK.
NO >> GO TO 2.

2. CHECK SECURITY INDICATOR LAMP POWER SUPPLY CIRCUIT

1. Turn ignition OFF.
2. Disconnect combination meter connector.
3. Check voltage between combination meter (security indicator lamp) harness connector and ground.

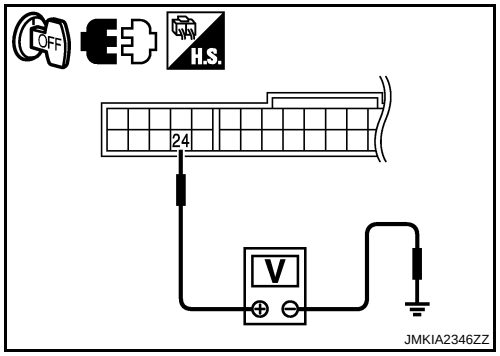

24 – Ground : Battery voltage

Is the inspection result normal?

YES >> GO TO 3.
NO >> Check the following.
- 10A fuse (No.6, located in the fuse and fusible link box)
- Check harness for open or short between fuse and combination meter.

3. CHECK SECURITY INDICATOR OPERATION

1. Turn ignition switch OFF.
2. Disconnect BCM connector.
3. Check continuity between BCM harness connector and combination meter (security indicator lamp) harness connector.

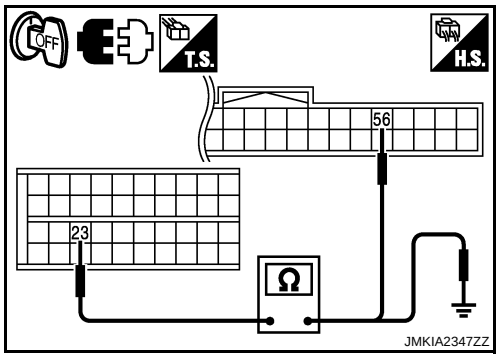

56 – 23 : Continuity should exist.

4. Check continuity between BCM harness connector and ground.

23 – Ground : Continuity should not exist.

Is the inspection result normal?

YES >> Harness for open or short between combination meter and fuse.
NO >> Repair or replace harness.

Removal and Installation of NATS Antenna Amp

INFOID:0000000003737156

REMOVAL

1. Remove the steering column cover.

2. Disconnect the NATS antenna amp connector, remove the screw (A) and NATS antenna amp. (1).

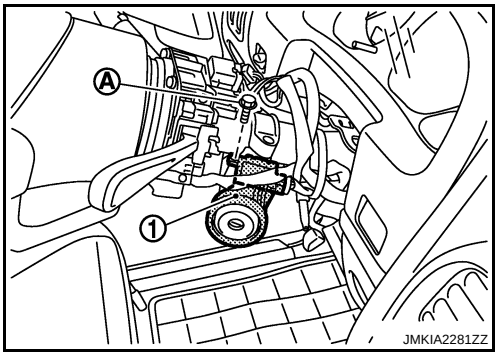

INSTALLATION

Install in the reverse order of removal.

NOTE:

- **If NATS antenna amp. is not installed correctly, NATS system will not operate properly and SELF-DIAG RESULTS on CONSULT-III screen will show “LOCK MODE” or “CHAIN OF IMMU-KEY”.**
- **Initialization is not necessary only when NATS antenna amp. is replaced with a new one.**

THEFT WARNING SYSTEM

Wiring Diagram - PRWIRE -

INFOID:0000000003777720

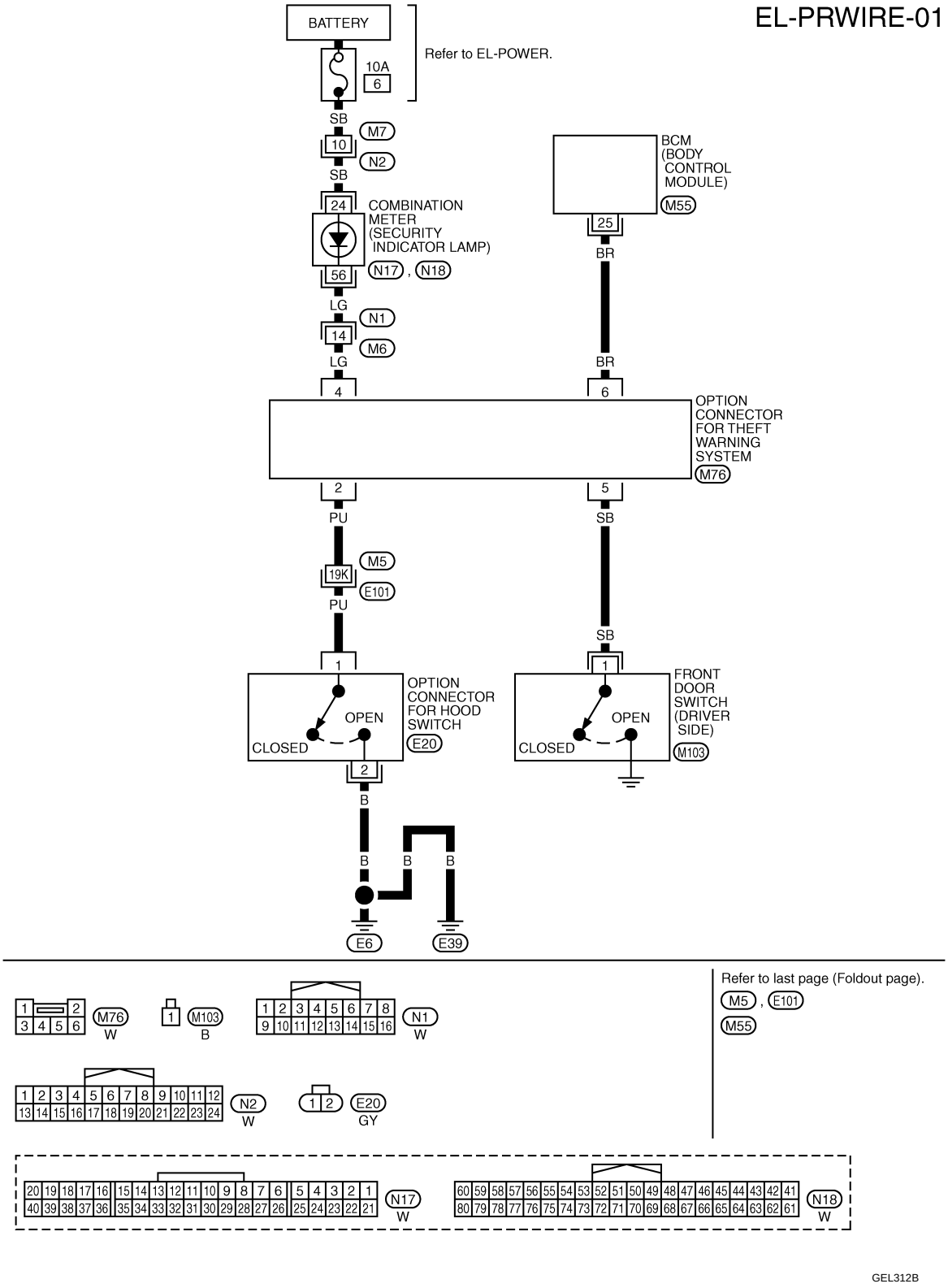

CAN SYSTEM

Abbreviation List

INFOID:0000000003497929

Abbreviations in CAN communication signal chart, and the diagnosis sheet are as per the following list.

Abbreviation	Unit name	SELECT SYSTEM (CONSULT-III)	CAN DIAG SUPPORT MNTR (CONSULT-III)
BCM	BCM	BCM	BCM/SEC
DLC	Data link connector	—	—
ECM	ECM	ENGINE	—
M&A	Combination meter	—	METER/M&A

CAN Diagnostic Support Monitor

INFOID:0000000003497930

Use “CAN DIAG SUPPORT MNTR” for detecting the root cause.

MONITOR ITEM LIST (CONSULT-III)

ECM
NOTE:
Replace the unit when “NG” is indicated on the “INITIAL DIAG”.

ITEM	CAN DIAG SUPPORT MNTR	Description	Normal	Error
			PRSNT	
ECM	INITIAL DIAG	Status of CAN controller	OK	NG
	TRANSMIT DIAG	Signal transmission status		UNKWN
	METER/M&A	Signal receiving status from the combination meter		
	BCM/SEC	With NATS: Signal receiving status from the BCM		
		Without NATS: Not used even though indicated		
	HVAC	Not used even though indicated		

BCM
NOTE:
- Replace the unit when “NG” is indicated on the “INITIAL DIAG”.
- DTC “U1000” of “SELF-DIAG RESULTS” does not mean that there is a malfunction under the CONSULT-III communication condition with ignition switch OFF for 5 minutes or more.

ITEM	CAN DIAG SUPPORT MNTR	Description	Normal	Error
			PRSNT	
BCM	INITIAL DIAG	Status of CAN controller	OK	NG
	TRANSMIT DIAG	Signal transmission status		UNKWN
	ECM	Not used even though indicated		
	IPDM E/R			
	METER/M&A			
	I-KEY			

CAN System Specification Chart

INFOID:0000000003702853

Determine CAN system type from the following specification chart. Then choose the correct diagnosis sheet.

Body type	Pickup	
Axle	2WD/4WD	
Engine	YD25DDTi	
Transmission	M/T	
Brake control	—/ABS	
NATS		×
CAN system type	1	2
Diagnosis sheet	EL-114	EL-115
CAN communication signal chart	EL-111, "CAN Communication Signal Chart"	

VEHICLE EQUIPMENT IDENTIFICATION INFORMATION

NOTE:

Check CAN system type from the vehicle shape and equipment.

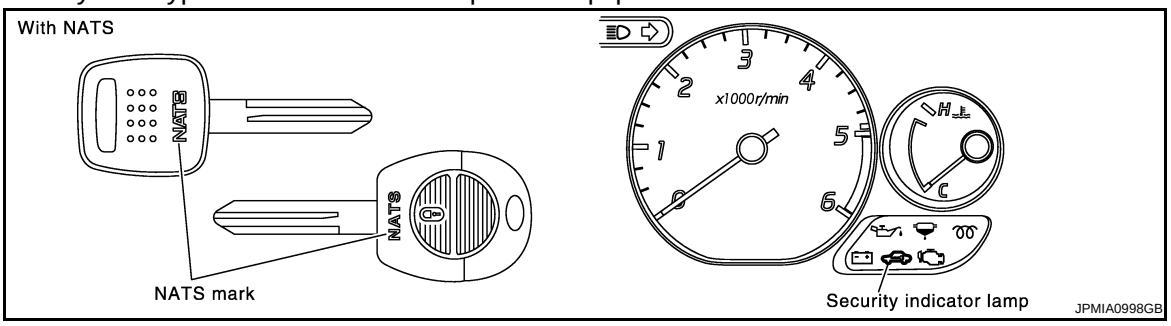

CAN Communication Signal Chart

INFOID:0000000003702854

TYPE 1/ TYPE 2

NOTE:

Refer to EL-110, "Abbreviation List" for the abbreviations of the connecting units.

T: Transmit R: Receive

Signal name/Connecting unit	ECM	BCM*1	M&A
A/C compressor request signal	T		R
Cooling fan speed request signal	T		R
Engine coolant temperature signal	T		R
Engine speed signal	T		R
Fuel consumption monitor signal	T		R
Glow indicator signal	T		R
Malfunction indicator lamp signal	T		R
A/C switch signal	R	T*1	
	R		T*2
Blower fan motor switch signal	R	T*1	
	R		T*2
Fuel level sensor signal	R		T
Vehicle speed signal	R		T

*1: Models with NATS

*2: Models without NATS

Wiring Diagram - CAN -

INFOID:0000000003702859

EL-CAN-01

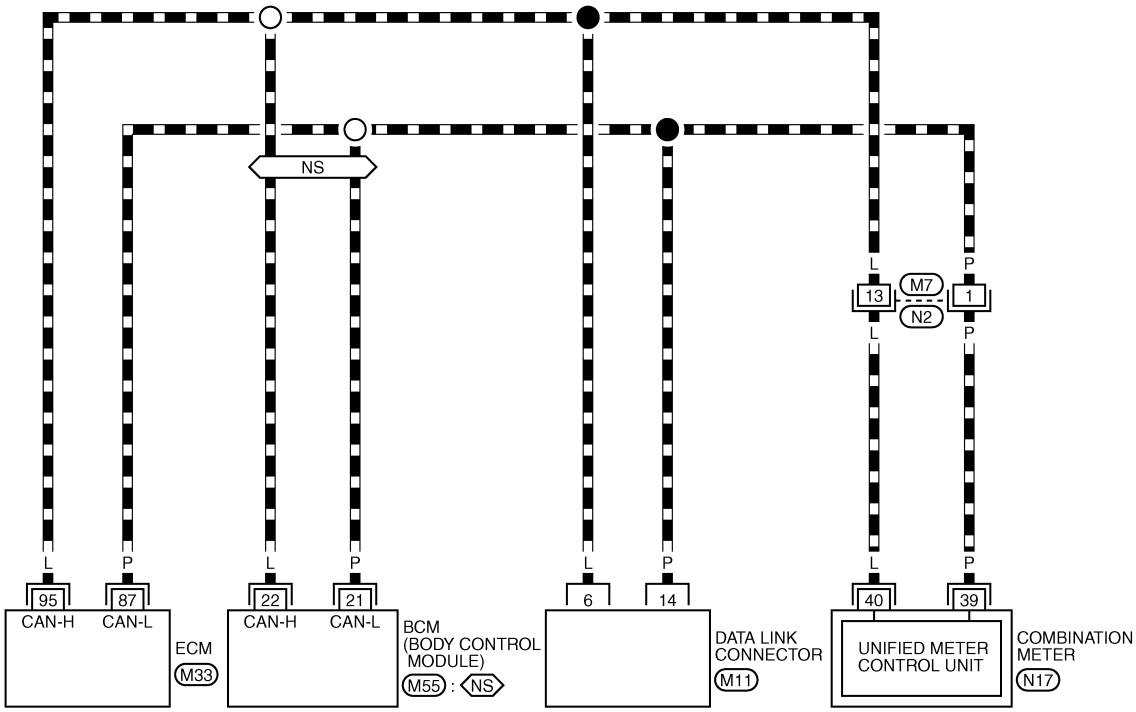

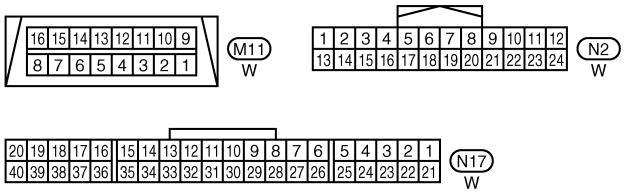

Refer to last page (Foldout page).

M33

M55

GEL313B

Interview Sheet

INFOID:0000000003702860

CAN Communication System Diagnosis Interview Sheet

Date received:

Type: VIN No.:

Model:

First registration: Mileage:

CAN system type:

Symptom (Results from interview with customer)

Condition at inspection

Error symptom : Present / Past

SKIB8898E

CAN System (Type 1)

INFOID:0000000003702862

DIAGNOSIS SHEET

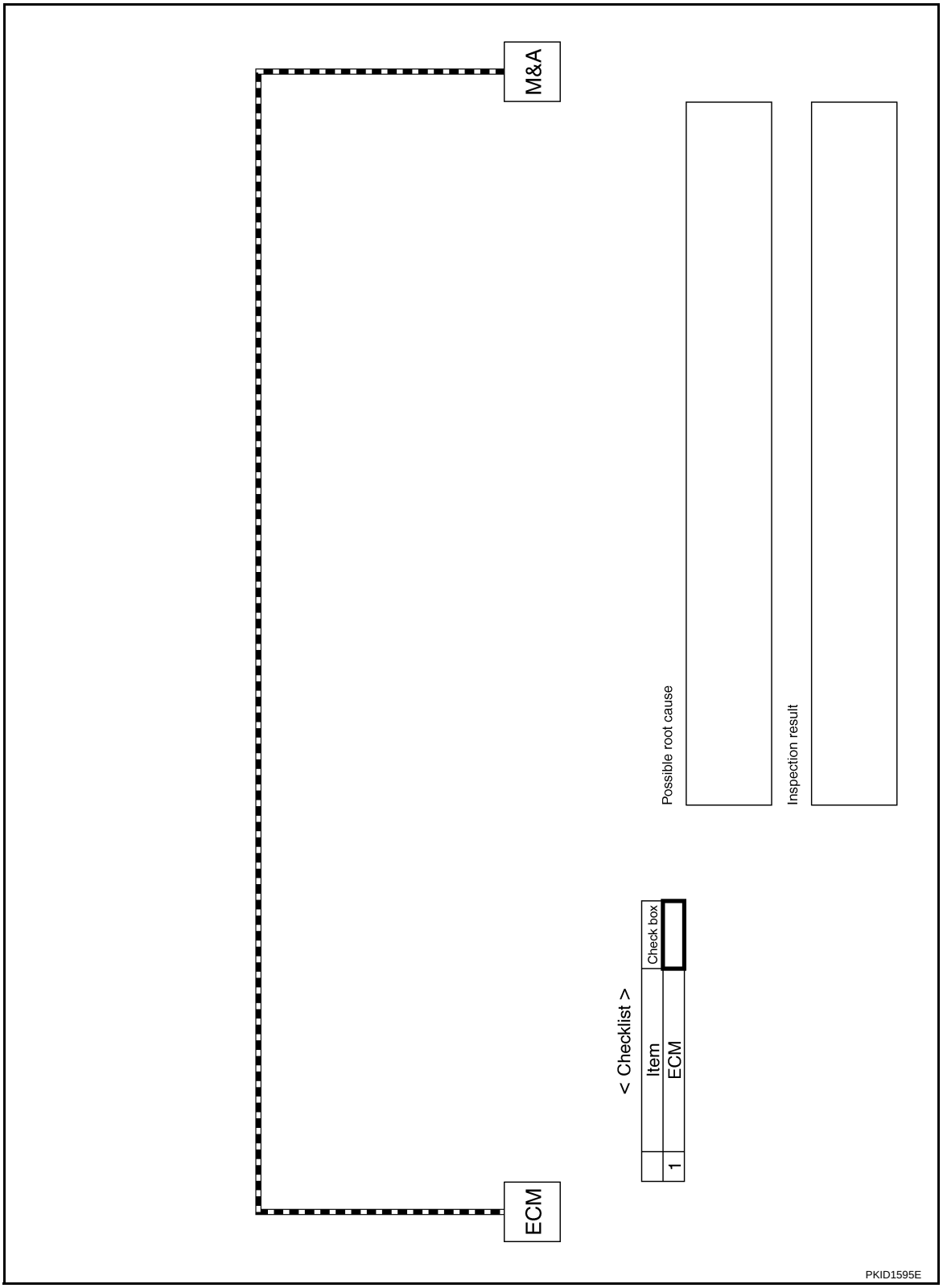

CAN System (Type 2)

INFOID:0000000003702863

DIAGNOSIS SHEET

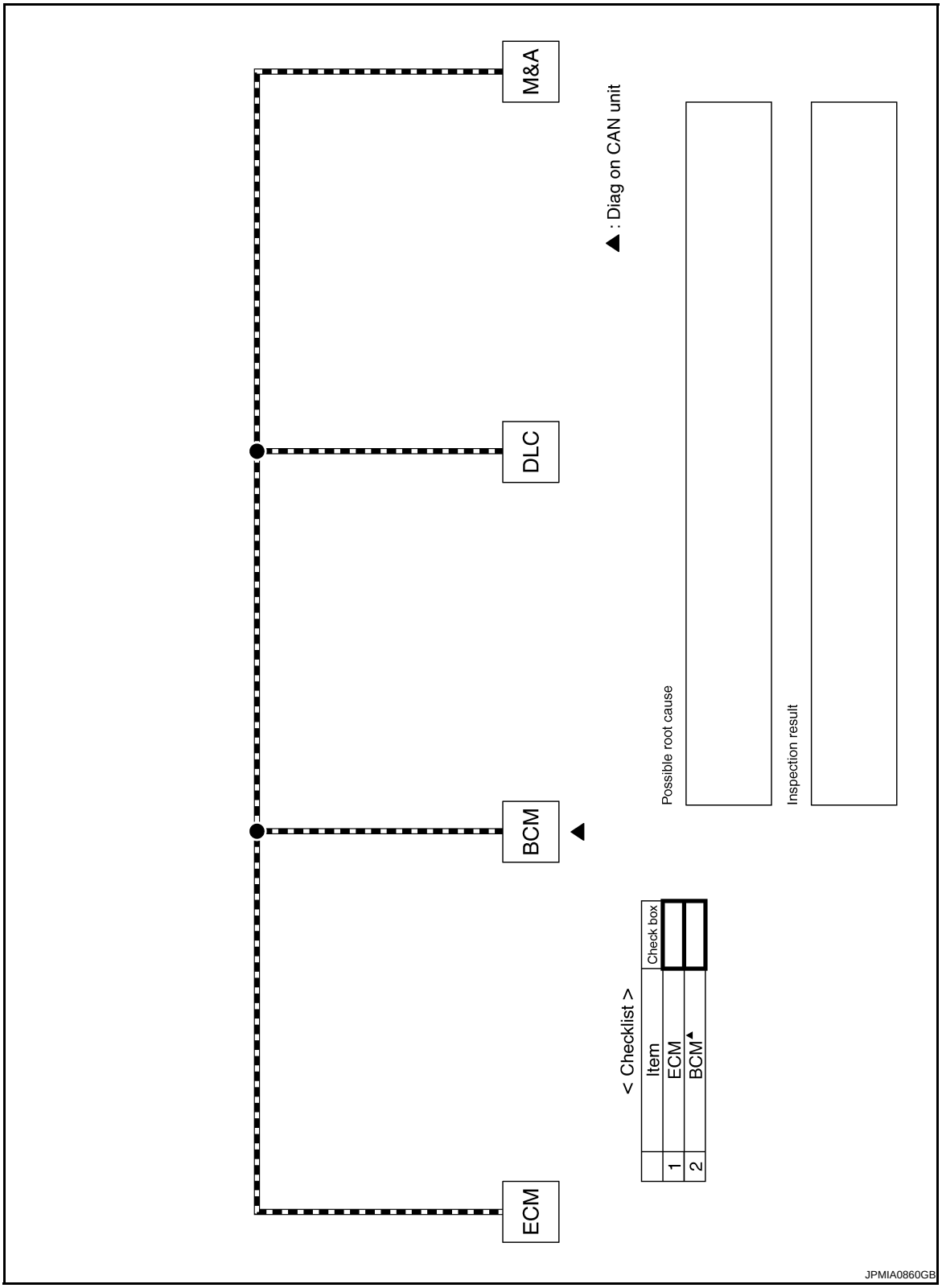

Component Parts Location

INFOID:0000000003702864

LHD MODELS

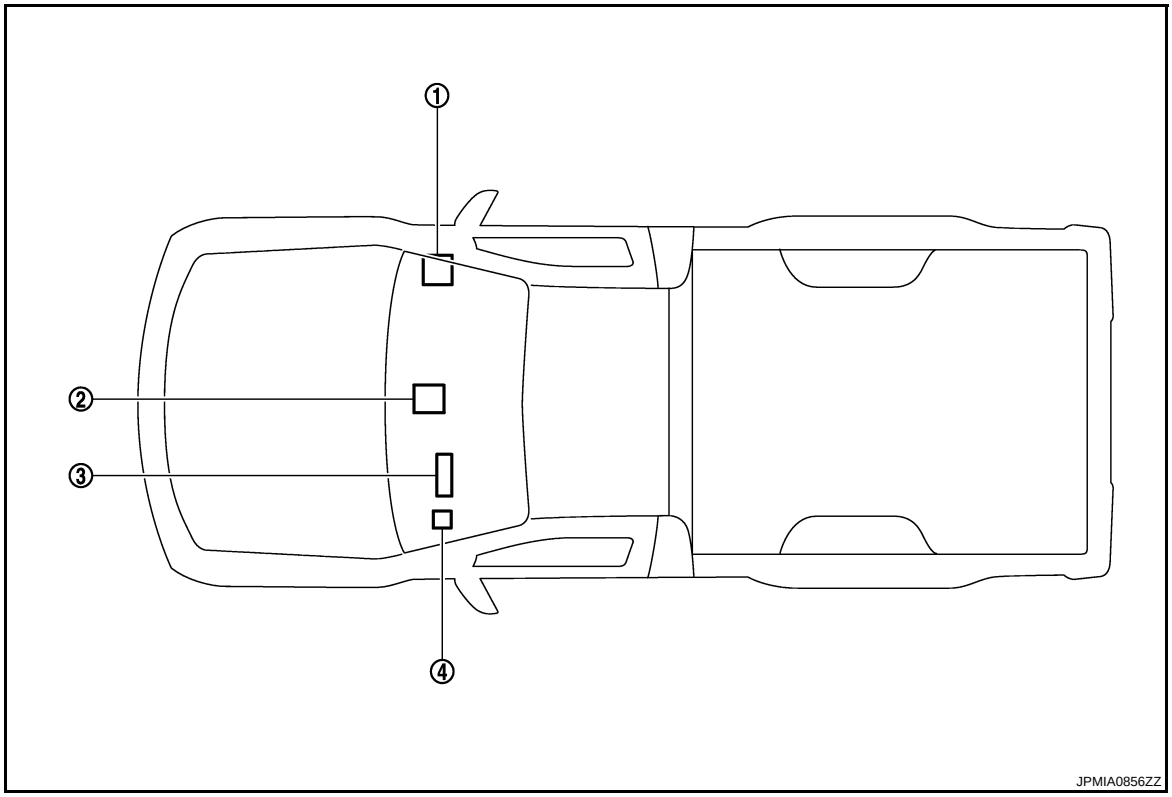

1. BCM M55
2. ECM M33
3. Combination meter N17
4. Data link connector M11

RHD MODELS

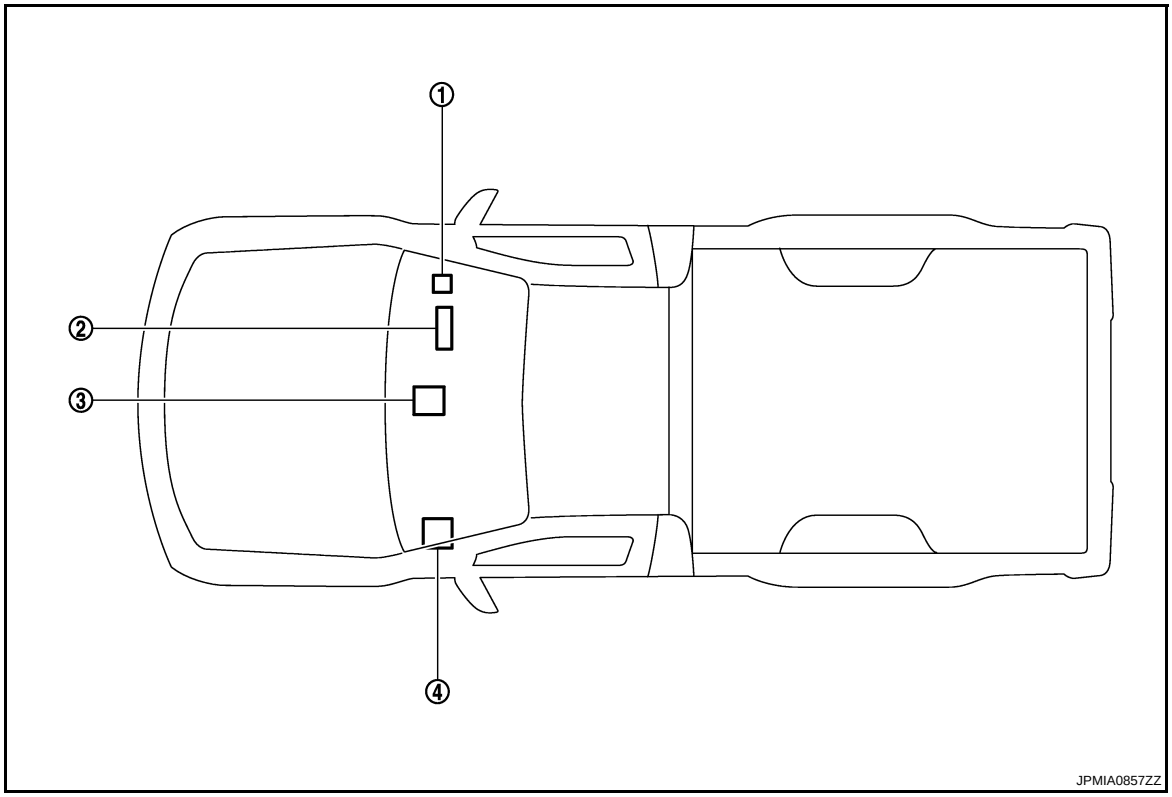

1. Data link connector M11
2. Combination meter N17
3. ECM M33
4. BCM M55

Malfunction Area Chart

INFOID:0000000003497938

MAIN LINE

Malfunction Area	Reference
Main line between ECM and combination meter	EL-117, "Main Line Between ECM and Combination Meter"
Main line between BCM and data link connector	EL-117, "Main Line Between BCM and Data Link Connector"

BRANCH LINE

Malfunction Area	Reference
ECM branch line circuit	EL-118, "ECM Branch Line Circuit"
BCM branch line circuit	EL-118, "BCM Branch Line Circuit"
Data link connector branch line circuit	EL-119, "Data Link Connector Branch Line Circuit"
Combination meter branch line circuit	EL-119, "Combination Meter Branch Line Circuit"

SHORT CIRCUIT

Malfunction Area	Reference
CAN communication circuit	EL-120, "CAN Communication Circuit"

Main Line Between ECM and Combination Meter

INFOID:0000000003794364

INSPECTION PROCEDURE

1. CHECK HARNESS CONTINUITY (OPEN CIRCUIT)

1. Turn the ignition switch OFF.
2. Disconnect the battery cable from the negative terminal.
3. Disconnect the following harness connectors.
- ECM
- Combination meter
4. Check the continuity between the ECM harness connector and the combination meter harness connector.

ECM harness connector		Combination meter harness connector		Continuity
Connector No.	Terminal No.	Connector No.	Terminal No.	
M33	95	N17	40	Yes
	87		39	Yes

OK or NG

OK >> • Present error: Check the following items again.
- Decision of CAN system type.
- Not received CONSULT-III data [SELF-DIAG RESULTS, CAN DIAG SUPPORT MNTR ("ECU list" included)].
- Procedure for detecting root cause.
• Past error: Error was detected in the main line between the ECM and combination meter.

NG >> Repair the main line between the ECM and the combination meter.

Main Line Between BCM and Data Link Connector

INFOID:0000000003497939

INSPECTION PROCEDURE

1. CHECK HARNESS CONTINUITY (OPEN CIRCUIT)

1. Turn the ignition switch OFF.

2. Disconnect the battery cable from the negative terminal.
3. Disconnect the following harness connectors.
- ECM
- BCM
4. Check the continuity between the BCM harness connector and the data link connector.

BCM harness connector		Data link connector		Continuity
Connector No.	Terminal No.	Connector No.	Terminal No.	
M55	22	M11	6	Yes
	21		14	Yes

OK or NG

OK >> • Present error: Check the following items again.
- Decision of CAN system type.
- Not received CONSULT-III data [SELF-DIAG RESULTS, CAN DIAG SUPPORT MNTR ("ECU list" included)].
- Procedure for detecting root cause.
• Past error: Error was detected in the main line between the BCM and data link connector.

NG >> Repair the main line between the BCM and the data link connector.

ECM Branch Line Circuit

INFOID:0000000003505365

INSPECTION PROCEDURE

1. CHECK CONNECTOR

1. Turn the ignition switch OFF.
2. Disconnect the battery cable from the negative terminal.
3. Check the terminals and connectors of the ECM for damage, bend and loose connection (unit side and connector side).

OK or NG

OK >> GO TO 2.
NG >> Repair the terminal and connector.

2. CHECK HARNESS FOR OPEN CIRCUIT

1. Disconnect the connector of ECM.
2. Check the resistance between the ECM harness connector terminals.

ECM harness connector			Resistance (Ω)
Connector No.	Terminal No.		
M33	95	87	Approx. 108 – 132

OK or NG

OK >> GO TO 3.
NG >> Repair the ECM branch line.

3. CHECK POWER SUPPLY AND GROUND CIRCUIT

Check the power supply and the ground circuit of the ECM. Refer to EC-78, "Diagnosis Procedure".

OK or NG

OK >> • Present error: Replace the ECM. Refer to EC-22, "Procedure After Replacing ECM".
• Past error: Error was detected in the ECM branch line.

NG >> Repair the power supply and the ground circuit.

BCM Branch Line Circuit

INFOID:0000000003505366

INSPECTION PROCEDURE

1. CHECK CONNECTOR

1. Turn the ignition switch OFF.
2. Disconnect the battery cable from the negative terminal.

3. Check the terminals and connectors of the BCM for damage, bend and loose connection (unit side and connector side).

OK or NG

OK >> GO TO 2.
NG >> Repair the terminal and connector.

2. CHECK HARNESS FOR OPEN CIRCUIT

1. Disconnect the connector of BCM.
2. Check the resistance between the BCM harness connector terminals.

BCM harness connector			Resistance (Ω)
Connector No.	Terminal No.		
M55	22	21	Approx. 54 – 66

OK or NG

OK >> GO TO 3.
NG >> Repair the BCM branch line.

3. CHECK POWER SUPPLY AND GROUND CIRCUIT

Check the power supply and the ground circuit of the BCM.

OK or NG

OK >> • Present error: Replace the BCM. Refer to EL-95, "Component Parts and Harness Connector Location"
• Past error: Error was detected in the BCM branch line.
NG >> Repair the power supply and the ground circuit.

Data Link Connector Branch Line Circuit

INFOID:0000000003505367

INSPECTION PROCEDURE

1. CHECK CONNECTOR

1. Turn the ignition switch OFF.
2. Disconnect the battery cable from the negative terminal.
3. Check the terminals and connectors of the data link connector for damage, bend and loose connection (connector side and harness side).

OK or NG

OK >> GO TO 2.
NG >> Repair the terminal and connector.

2. CHECK HARNESS FOR OPEN CIRCUIT

Check the resistance between the data link connector terminals.

Data link connector			Resistance (Ω)
Connector No.	Terminal No.		
M11	6	14	Approx. 54 – 66

OK or NG

OK >> • Present error: Check the following items again.
- Decision of CAN system type.
- Not received CONSULT-III data [SELF-DIAG RESULTS, CAN DIAG SUPPORT MNTR (“ECU list” included)].
- Procedure for detecting root cause.
• Past error: Error was detected in the data link connector branch line circuit.
NG >> Repair the data link connector branch line.

Combination Meter Branch Line Circuit

INFOID:0000000003505368

INSPECTION PROCEDURE

1.CHECK CONNECTOR

1. Turn the ignition switch OFF.
2. Disconnect the battery cable from the negative terminal.
3. Check the following terminals and connectors for damage, bend and loose connection (unit side and connector side).

- Combination meter
- Harness connector N2
- Harness connector M7

OK or NG

OK >> GO TO 2.
NG >> Repair the terminal and connector.

2.CHECK HARNESS FOR OPEN CIRCUIT

1. Disconnect the connector of combination meter.
2. Check the resistance between the combination meter harness connector terminals.

Combination meter harness connector			Resistance (Ω)
Connector No.	Terminal No.		
N17	40	39	Approx. 108 – 132

OK or NG

OK >> GO TO 3.
NG >> Repair the combination meter branch line.

3.CHECK POWER SUPPLY AND GROUND CIRCUIT

Check the power supply and the ground circuit of the combination meter. Refer to EL-56, "Power Supply and Ground Circuit Inspection".

OK or NG

OK >> • Present error: Replace the combination meter.
• Past error: Error was detected in the combination meter branch line.
NG >> Repair the power supply and the ground circuit.

CAN Communication Circuit

INFOID:0000000003702868

INSPECTION PROCEDURE

1.CONNECTOR INSPECTION

1. Turn the ignition switch OFF.
2. Disconnect the battery cable from the negative terminal.
3. Disconnect all the unit connectors on CAN communication system.
4. Check terminals and connectors for damage, bend and loose connection.

OK or NG

OK >> GO TO 2.
NG >> Repair the terminal and connector.

2.CHECK HARNESS CONTINUITY (SHORT CIRCUIT)

• Models without NATS
- Check the continuity between the ECM harness connector terminals.

ECM harness connector			Continuity
Connector No.	Terminal No.		
M33	95	87	No

• Models with NATS
- Check the continuity between the data link connector terminals.

Data link connector			Continuity
Connector No.	Terminal No.		
M11	6	14	No

OK or NG

OK >> GO TO 3.
NG >> Check the harness and repair the root cause.

3. CHECK HARNESS CONTINUITY (SHORT CIRCUIT)

- Models without NATS
- Check the continuity between the ECM harness connector and the ground.

ECM harness connector		Ground	Continuity
Connector No.	Terminal No.		
M33	95		No
	87		No

- Models with NATS
- Check the continuity between the data link connector and ground.

Data link connector		Ground	Continuity
Connector No.	Terminal No.		
M11	6		No
	14		No

OK or NG

OK >> GO TO 4.
NG >> Check the harness and repair the root cause.

4. CHECK ECM AND COMBINATION METER TERMINATION CIRCUIT

1. Remove the ECM and the combination meter.
2. Check the resistance between the ECM terminals.

ECM		Resistance (Ω)
Terminal No.		
95	87	Approx. 108 – 132

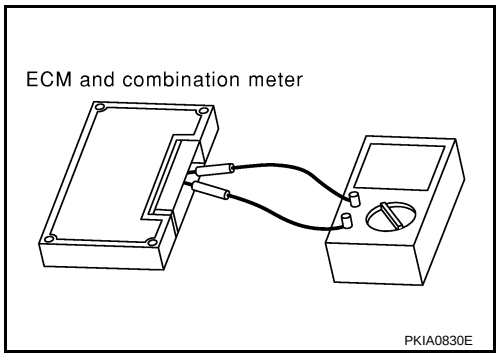

3. Check the resistance between the combination meter terminals.

Combination meter		Resistance (Ω)
Terminal No.		
40	39	Approx. 108 – 132

OK or NG

OK >> GO TO 5.
NG >> Replace the ECM and/or the combination meter.

5. CHECK SYMPTOM

Connect all the connectors. Check if the symptoms described in the “Symptom (Results from interview with customer)” are reproduced.

Inspection result

Reproduced>>•Models without NATS: Diagnose again. Refer to EL-110, "CAN System Specification Chart".
• Models with NATS: GO TO 6.
Non-reproduced>>Start the diagnosis again. Follow the trouble diagnosis procedure when past error is detected.

6. CHECK UNIT REPRODUCTION

Perform the reproduction test as per the following procedure for each unit.

1. Turn the ignition switch OFF
2. Disconnect the battery cable from the negative terminal.
3. Disconnect one of the unit connectors of CAN communication system.
   NOTE:
   ECM and combination meter have a termination circuit. Check other units first.
4. Connect the battery cable to the negative terminal. Check if the symptoms described in the “Symptom (Results from interview with customer)” are reproduced.
   NOTE:
   Although unit-related error symptoms occur, do not confuse them with other symptoms.

Inspection result

Reproduced>>Connect the connector. Check other units as per the above procedure.
Non-reproduced>>Replace unit whose connector was disconnected.

HARNESS LAYOUT

Outline

INFOID:0000000003777390

RHD MODELS

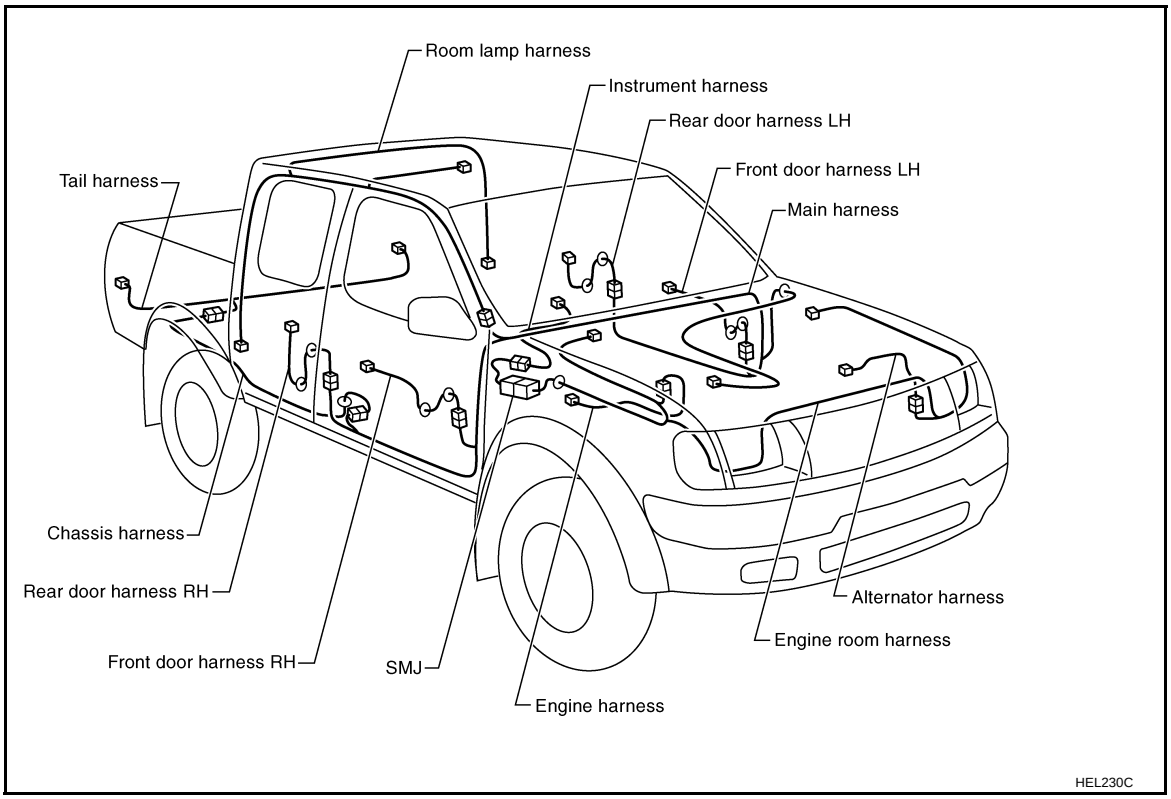

Main Harness

INFOID:0000000003777391

INSTRUMENT PANEL — LHD MODELS

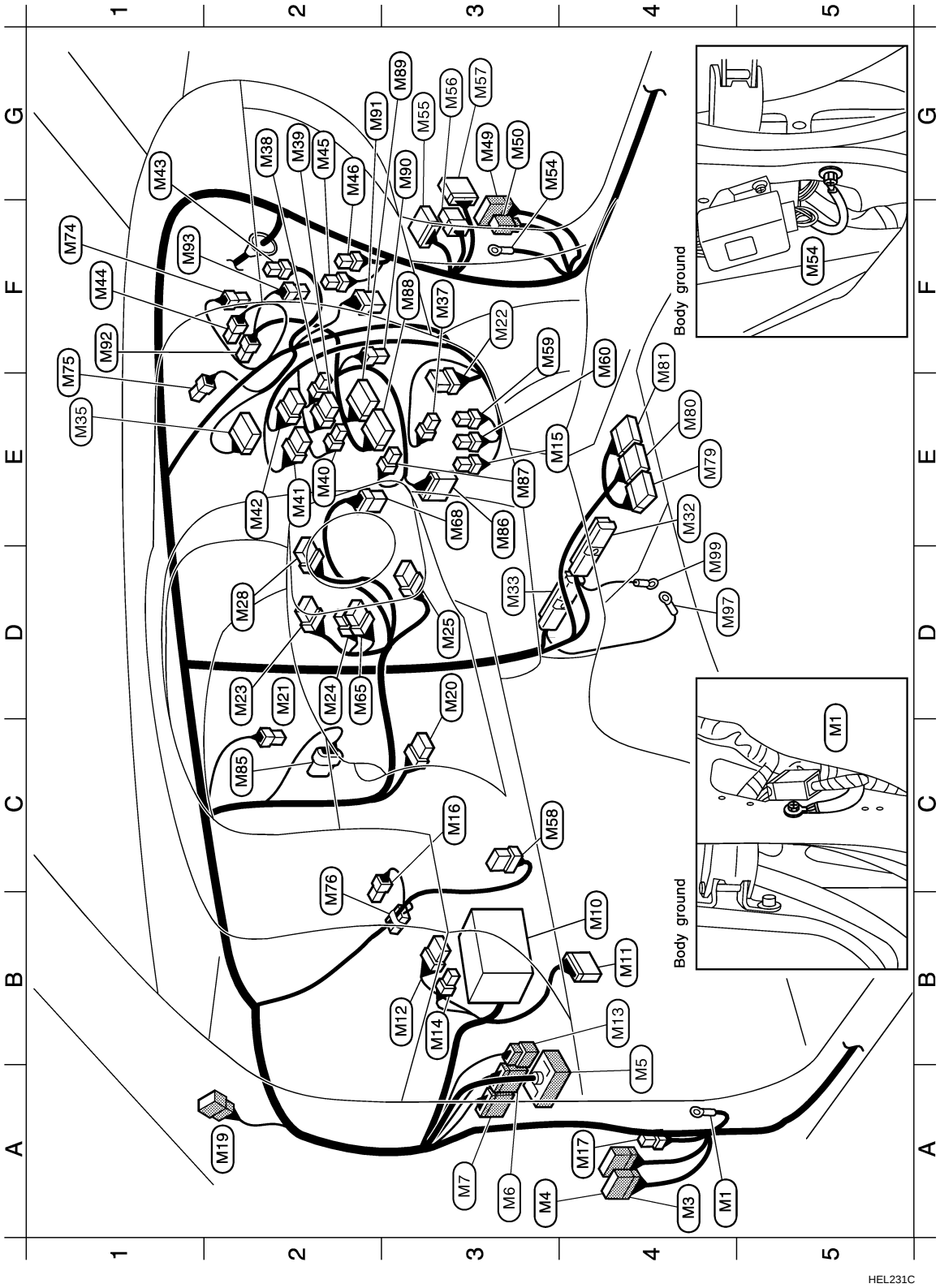

A4	M1	—	:	Body ground
A4	M3	W/16	:	To D1
A3	M4	W/12	:	To D2 (With power window)
A4	M5	SMJ	:	To E101
A3	M6	W/16	:	To N1
A3	M7	W/24	:	To N2
B4	M10	—	:	Fuse block
B4	M11	W/16	:	Data link connector
B3	M12	W/6	:	Fuse block
B4	M13	W/6	:	To E102
B3	M14	W/4	:	Fuse block
E3	M15	B/3	:	Combination flasher unit
C3	M16	B/2	:	Stop lamp switch
A4	M17	L/4	:	Front fog lamp relay
A2	M19	W/6	:	To R1
D3	M20	W/6	:	Ignition switch
D2	M21	W/1	:	Parking brake switch (Stick type)
F3	M22	W/6	:	Door lock relay (With power window)
D2	M23	BR/8	:	Lighting switch • Turn signal lamp switch
D2	M24	BR/4	:	Lighting switch
D3	M25	Y/7	:	Spiral cable
D2	M28	GY/8	:	Wiper and washer switch
E4	M32	SMJ	:	ECM
D3	M33	SMJ	:	ECM
E1	M35	W/20	:	Audio unit
F3	M37	B/2	:	Cigarette lighter
G2	M38	W/3	:	A/C switch (Without auto A/C)
G2	M39	W/6	:	Fan switch (Without auto A/C)
E2	M40	W/2	:	Fan switch illumination (Without auto A/C)
E2	M41	W/8	:	Hazard switch
E2	M42	W/6	:	Defogger switch
G1	M43	Y/2	:	Front passenger air bag module
F1	M44	BR/4	:	Thermo control amplifier (Without auto A/C)
G2	M45	BR/4	:	Fan resister (Without auto A/C)
G2	M46	W/2	:	Blower motor
G3	M49	W/10	:	To D31
G3	M50	W/4	:	To D32
G3	M54	—	:	Body ground
G3	M55	B/40	:	BCM (Body control module) (With theft warning system)
G3	M56	B/8	:	BCM (Body control module) (With theft warning system)
G3	M57	BR/12	:	BCM (Body control module) (With theft warning system)
C3	M58	BR/8	:	Multi-remote control unit (With power window)
F3	M59	BR/6	:	Defogger relay (With rear defogger or mirror defogger)
F4	M60	L/4	:	Rear fog lamp relay
D2	M65	W/6	:	Fog lamp switch
E3	M68	W/4	:	NATS antenna amp. (With theft warning system)
F1	M74	W/2	:	Intake air temperature sensor (With auto A/C)
F1	M75	B/2	:	Sunload sensor (With auto A/C)
C2	M76	W/6	:	Option connector (With theft warning system)
E4	M79	Y/12	:	Air bag diagnosis sensor unit (For pre-tensioner seat belt)
E4	M80	Y/20	:	Air bag diagnosis sensor unit
F4	M81	Y/12	:	Air bag diagnosis sensor unit (For pre-tensioner seat belt)
C2	M85	GY/6	:	Accelerator pedal position sensor
E3	M86	BR/10	:	Mode door motor (With auto A/C)
E3	M87	W/2	:	In-vehicle sensor (With auto A/C)
F3	M88	GY/20	:	A/C auto amp. (With auto A/C)
G3	M89	GY/16	:	A/C auto amp. (With auto A/C)
G3	M90	L/2	:	Aspirator motor (With auto A/C)
G2	M91	B/6	:	Air mix door motor (With auto A/C)
F1	M92	W/4	:	Fan control amp. (With auto A/C)
F1	M93	W/4	:	Intake door motor (With auto A/C)
D4	M97	—	:	Body ground
D4	M99	—	:	Body ground

HEL232C

INSTRUMENT PANEL — RHD MODELS

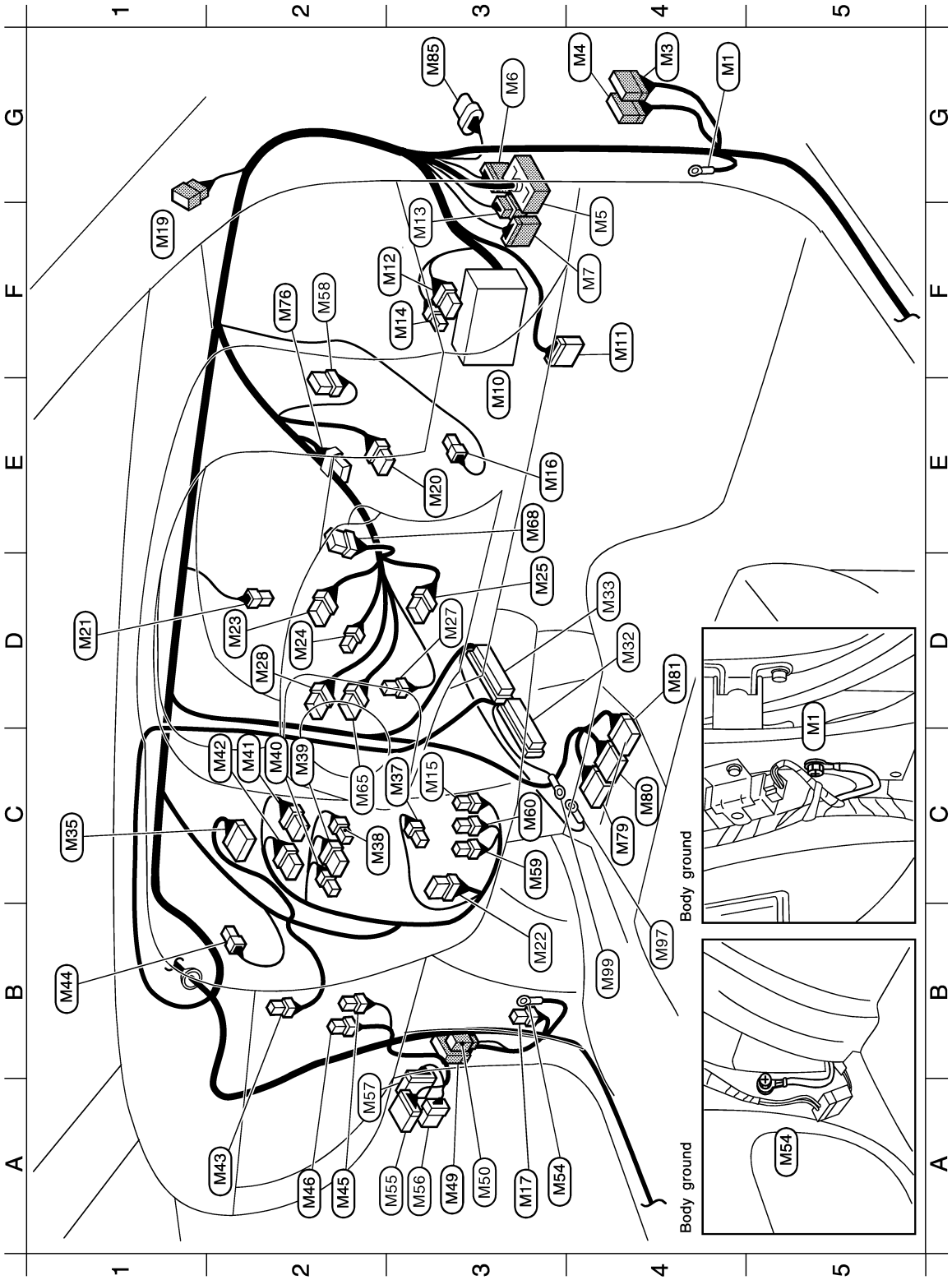

G4	M1	—	:	Body ground
G4	M3	W/16	:	To D1
G4	M4	W/12	:	To D2 (For power window)
F4	M5	SMJ	:	To E101
G3	M6	W/16	:	To N1
F4	M7	W/24	:	To N2
E3	M10	—	:	Fuse block
F4	M11	W/16	:	Data link connector
F3	M12	W/6	:	Fuse block
F3	M13	W/6	:	To E102
F3	M14	W/4	:	Fuse block
C3	M15	B/3	:	Combination flasher unit
E3	M16	B/2	:	Stop lamp switch
A3	M17	L/4	:	Front fog lamp relay (For Europe)
F1	M19	W/6	:	To R1
E3	M20	W/6	:	Ignition switch
D1	M21	W/1	:	Parking brake switch (Stick type)
B3	M22	W/6	:	Door lock relay (With power window)
D2	M23	BR/8	:	Lighting switch • Turn signal lamp switch
D2	M24	BR/4	:	Lighting switch
D3	M25	Y/7	:	Spiral cable (With air bag)
D3	M27	B/1	:	Horn switch (Without air bag)
D2	M28	GY/8	:	Wiper and washer switch
D4	M32	SMJ	:	ECM
D4	M33	SMJ	:	ECM
C1	M35	W/20	:	Audio unit
C3	M37	B/2	:	Cigarette lighter
C2	M38	W/3	:	A/C switch
C2	M39	W/6	:	Fan switch
C2	M40	W/2	:	Fan switch illumination
C2	M41	W/8	:	Hazard switch
C2	M42	W/6	:	Defogger switch
A2	M43	Y/2	:	Front passenger air bag module
B1	M44	BR/4	:	Thermo control amplifier
A2	M45	BR/4	:	Fan resistor
A2	M46	W/2	:	Blower motor
A3	M49	W/10	:	To D31
A3	M50	W/4	:	To D32 (For power window)
A3	M54	—	:	Body ground
A3	M55	B/40	:	BCM (Body control module) (For Europe)
A3	M56	B/8	:	BCM (Body control module) (For Europe)
A2	M57	BR/12	:	BCM (Body control module) (For Europe)
F2	M58	BR/8	:	Multi-remote control unit (With power window)
C3	M59	BR/6	:	Defogger relay (With rear defogger or mirror defogger)
C3	M60	L/4	:	Rear fog lamp relay (For Europe)
C2	M65	W/6	:	Front and rear fog lamp switch (For Europe)
E3	M68	W/4	:	NATS antenna amp. (For Europe)
F2	M76	W/6	:	Option connector for theft warning system (For Europe)
C4	M79	Y/12	:	Air bag diagnosis sensor unit (With air bag)
C4	M80	Y/20	:	Air bag diagnosis sensor unit (With air bag)
D4	M81	Y/12	:	Air bag diagnosis sensor unit (With air bag)
G3	M85	GY/6	:	Accelerator pedal position sensor
B4	M97	—	:	Body ground
B4	M99	—	:	Body ground

HEL234C

BODY SIDE — LHD MODELS

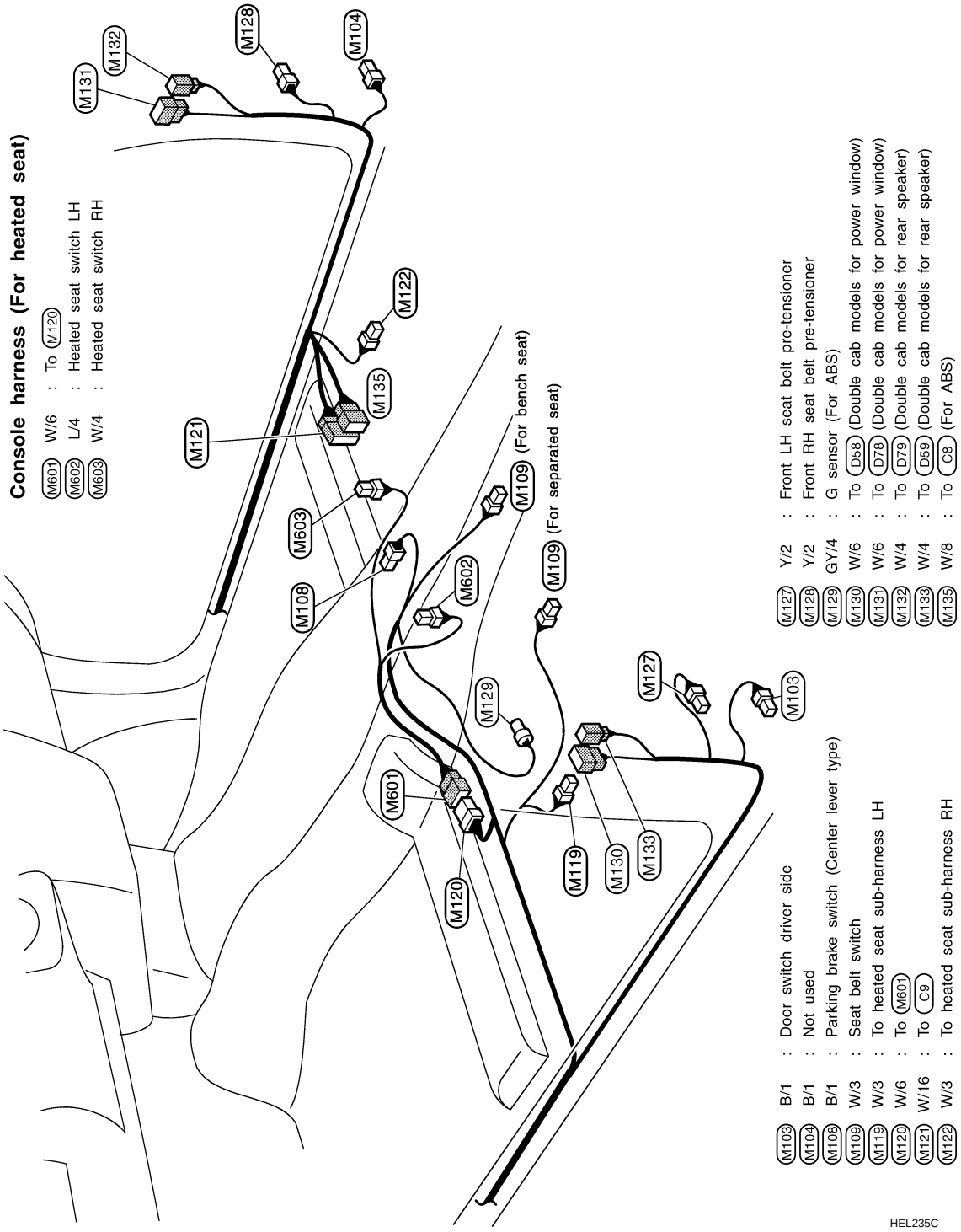

BODY SIDE — RHD MODELS

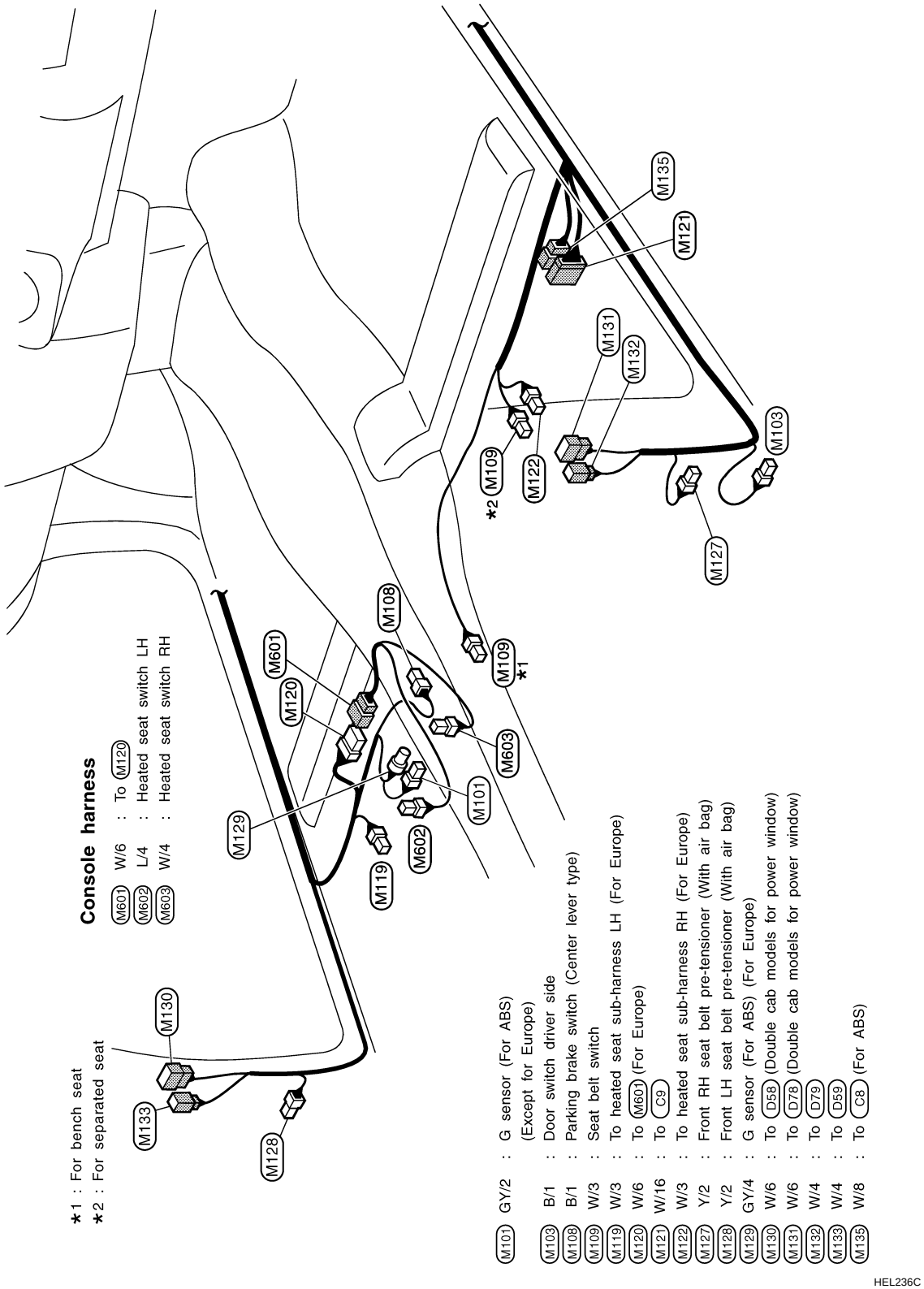

ENGINE COMPARTMENT — LHD MODELS

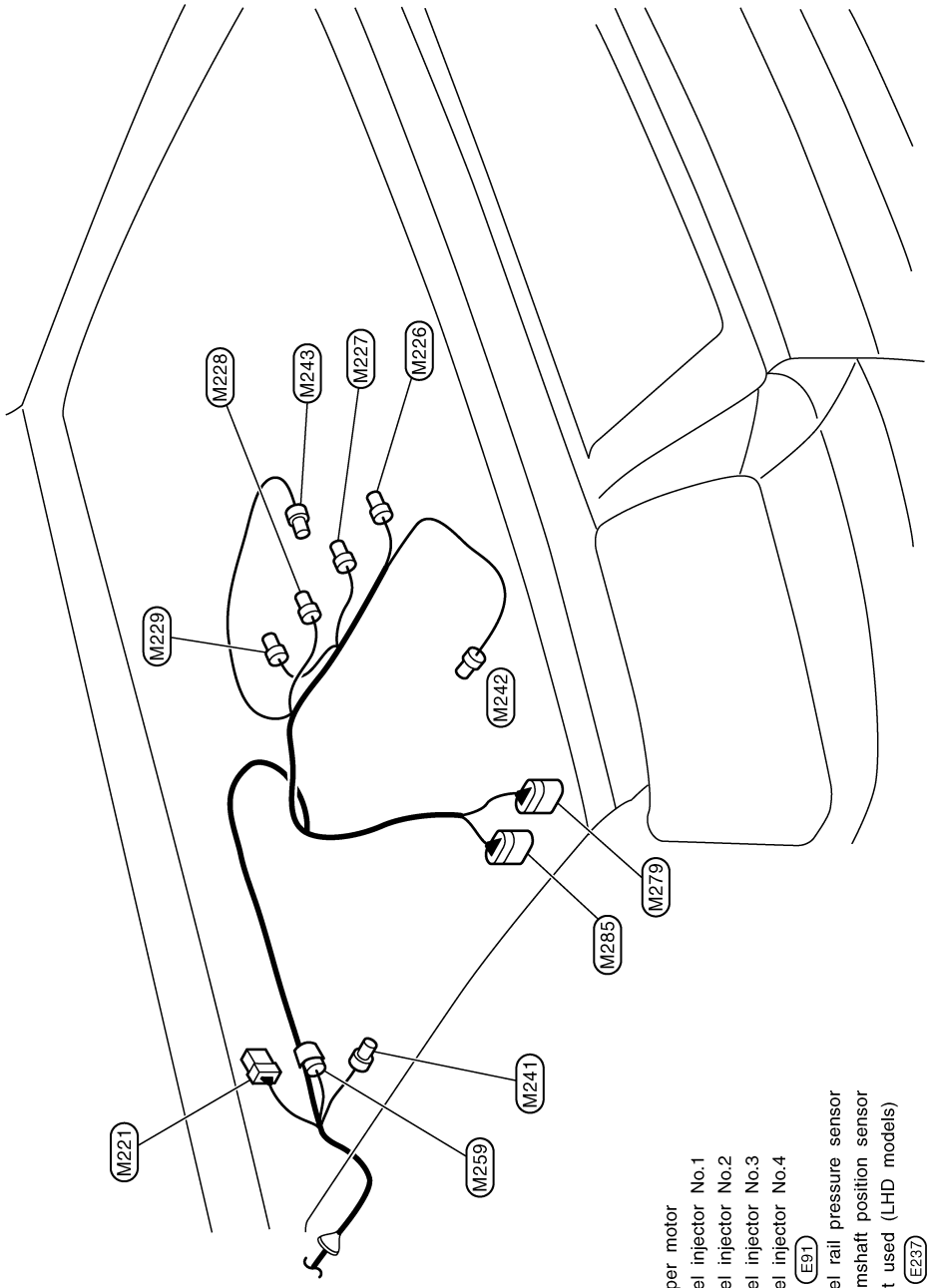

M221	W/6	: Wiper motor
M226	GY/2	: Fuel injector No.1
M227	GY/2	: Fuel injector No.2
M228	GY/2	: Fuel injector No.3
M229	GY/2	: Fuel injector No.4
M241	B/2	: To E91
M242	–/3	: Fuel rail pressure sensor
M243	B/3	: Camshaft position sensor
M259	BR/2	: Not used (LHD models)
M279	GY/10	: To E237
M285	B/10	: To E254

HEL237C

ENGINE COMPARTMENT — RHD MODELS

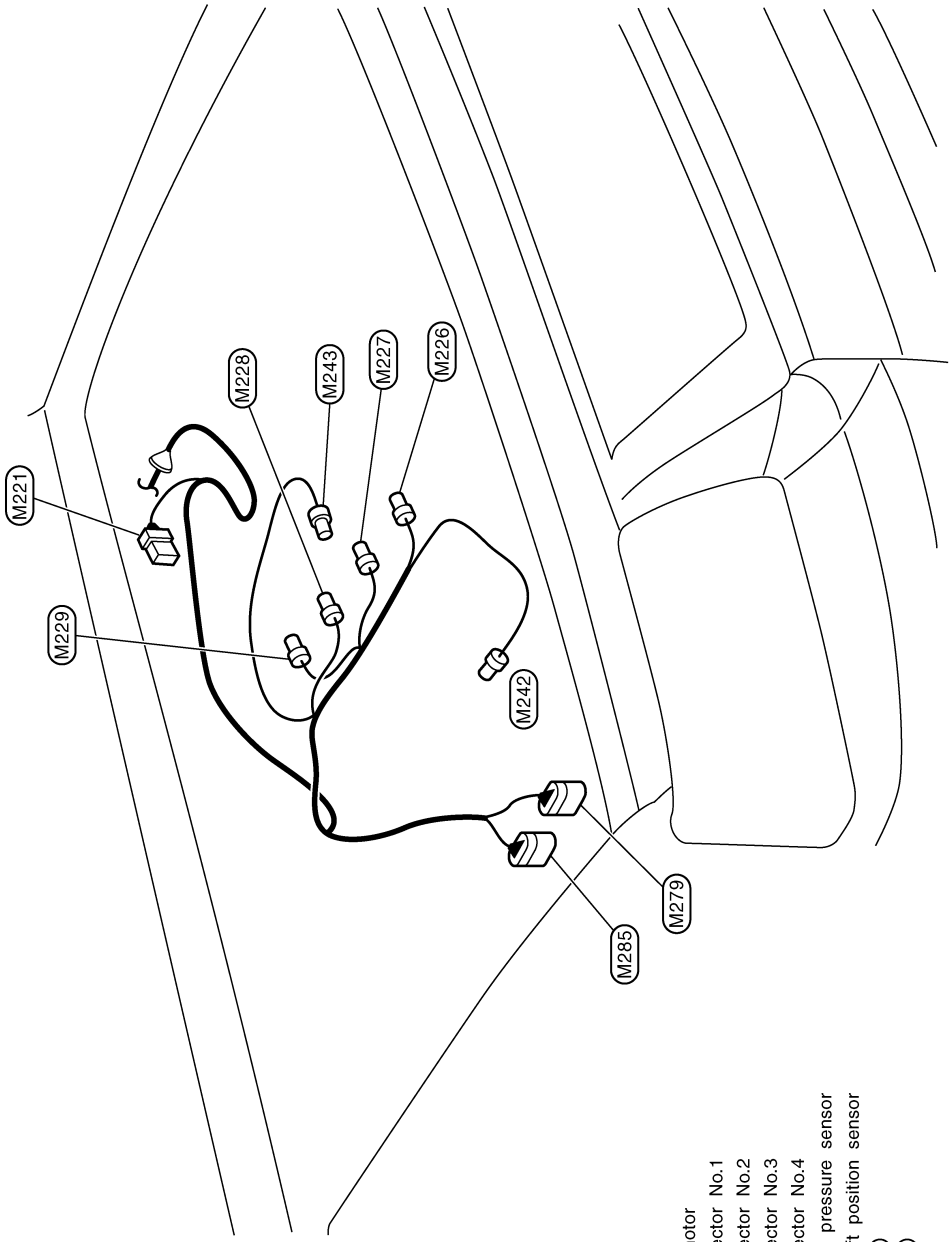

M221	W/6	: Wiper motor
M226	GY/2	: Fuel injector No.1
M227	GY/2	: Fuel injector No.2
M228	GY/2	: Fuel injector No.3
M229	GY/2	: Fuel injector No.4
M242	–/3	: Fuel rail pressure sensor
M243	B/3	: Camshaft position sensor
M279	GY/10	: To E237
M285	B/10	: To E254

HEL238C

Engine Room Harness

INFOID:0000000003777392

LHD MODELS

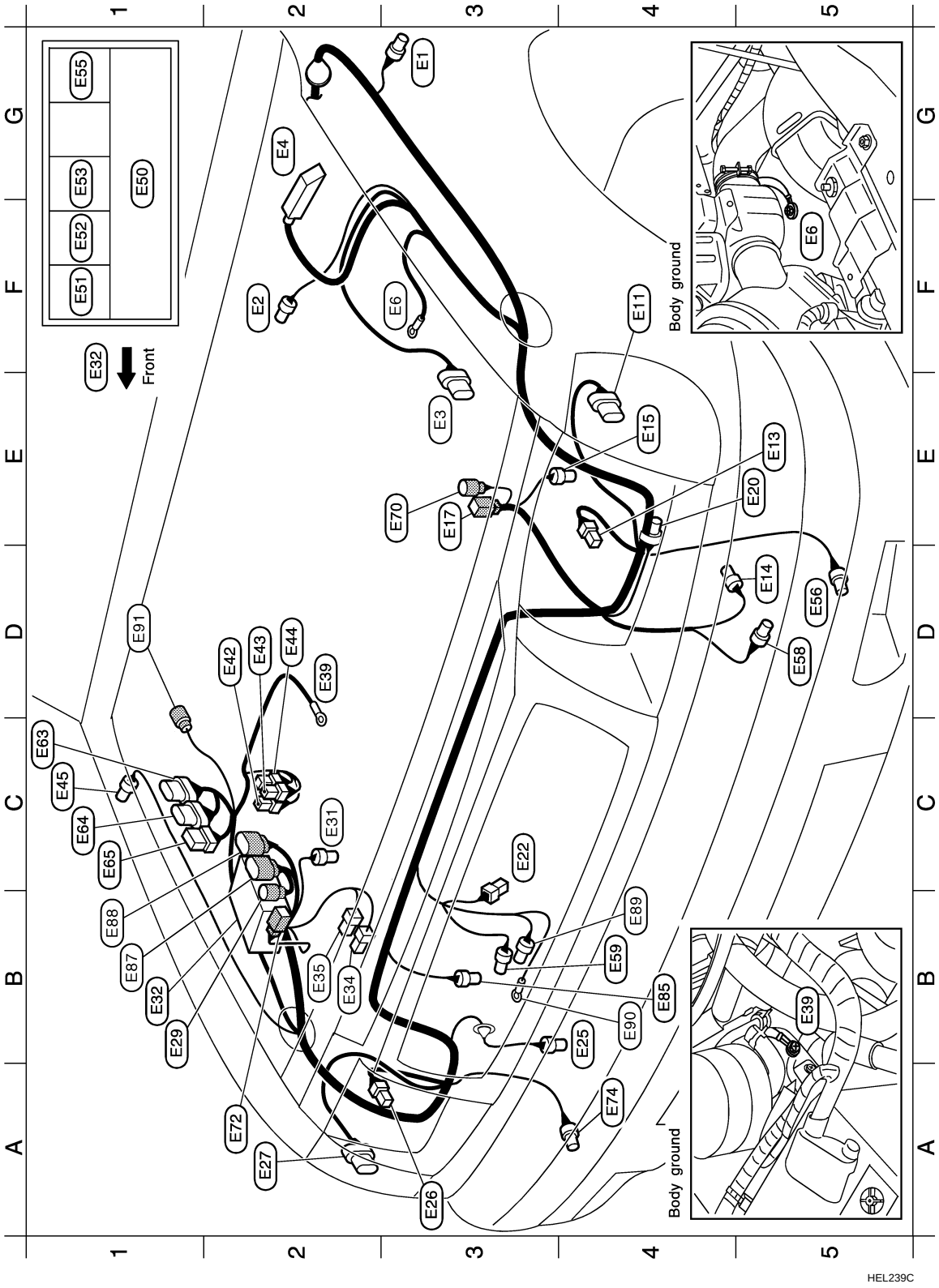

HEL239C

HARNESS LAYOUT

G3	E1	GY/2	:	Side turn signal lamp LH
F2	E2	GY/2	:	Brake fluid level switch
E3	E3	B/6	:	Mass air flow sensor
G2	E4	B/31	:	ABS actuator and electric unit (For ABS)
F3	E6	—	:	Body ground
F4	E11	GY/6	:	Front combination lamp LH
E5	E13	B/3	:	Headlamp LH
D5	E14	GY/2	:	Washer motor
E4	E15	BR/2	:	Front wheel sensor LH (For ABS)
E3	E17	B/2	:	To A2
E5	E20	GY/2	:	Option connector (For hood switch)
C3	E22	B/1	:	Horn low
B4	E25	B/4	:	Triple-pressure switch
A3	E26	B/3	:	Headlamp RH
A2	E27	GY/6	:	Front combination lamp RH
B1	E29	GY/2	:	To E204
C2	E31	GY/2	:	Front wheel sensor RH (For ABS)
B1	E32	—	:	Relay box (Fusible link and fuse box)
B2	E34	B/1	:	Battery
B2	E35	B/1	:	Battery
D2	E39	—	:	Body ground
D2	E42	W/1	:	Glow relay-1
D2	E43	W/1	:	Glow relay-1
D2	E44	G/2	:	Glow relay-1
C1	E45	GY/2	:	Side turn signal lamp RH
G1	E50	—	:	Fusible link and fuse box
F1	E51	L/4	:	Cooling fan relay
F1	E52	L/4	:	Air conditioner relay
G1	E53	W/3	:	Horn relay
G1	E55	L/4	:	ECM relay
D5	E56	B/2	:	Front fog lamp LH
D5	E58	GY/2	:	Headlamp washer motor
B4	E59	B/2	:	Ambient sensor (For auto A/C)
C1	E63	GY/6	:	Daytime light unit (With daytime light system)
C1	E64	GY/8	:	Daytime light unit (With daytime light system)
C1	E65	W/6	:	Headlamp washer amplifier
E3	E70	BR/3	:	To A14
A2	E72	B/1	:	To E232
A4	E74	B/2	:	Front fog lamp RH
B4	E85	GY/2	:	Cooling fan motor
B1	E87	GY/6	:	To E248
B1	E88	B/6	:	To E249
B4	E89	Y/2	:	Crash zone sensor
B4	E90	—	:	Body ground
D1	E91	B/2	:	To M241

PASSENGER COMPARTMENT

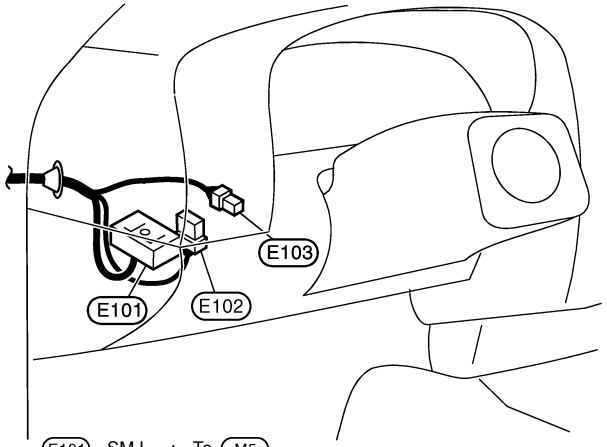

E101	SMJ	:	To M5
E102	W/6	:	To M13
E103	B/2	:	Fuse block

HEL240C

RHD MODELS

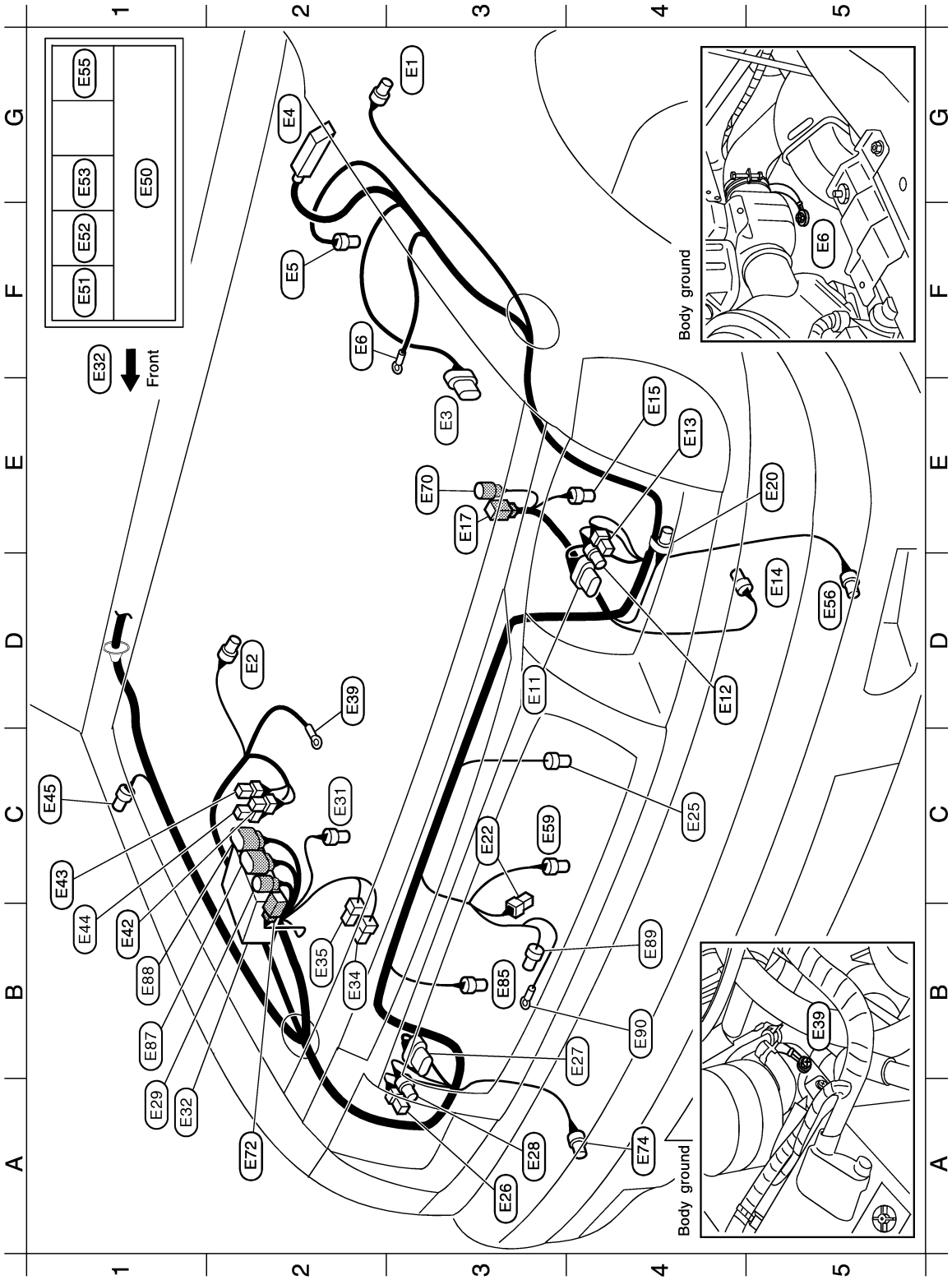

HEL241C

G3	E1	GY/2	:	Side turn signal lamp LH
D2	E2	GY/2	:	Brake fluid level switch
E3	E3	B/6	:	Mass air flow sensor
G2	E4	B/31	:	ABS actuator and electric unit (For ABS)
F2	E5	BR/2	:	Fuel filter switch (Except for Europe)
F2	E6	—	:	Body ground
D3	E11	GY/6	:	Front combination lamp LH (For Europe)
D4	E12	GY/3	:	Front combination lamp LH (Except for Europe)
E4	E13	B/3	:	Headlamp LH
D5	E14	GY/2	:	Washer motor
E4	E15	BR/2	:	Front wheel sensor LH (For ABS)
E3	E17	B/2	:	To A2
E5	E20	GY/2	:	Option connector (For hood switch) (For Europe)
C3	E22	B/1	:	Horn low
C4	E25	B/4	:	Triple-pressure switch
A3	E26	B/3	:	Headlamp RH
B4	E27	GY/6	:	Front combination lamp RH (For Europe)
A3	E28	GY/3	:	Front combination lamp RH (Except for Europe)
A1	E29	GY/2	:	To E204
C2	E31	GY/2	:	Front wheel sensor RH (For ABS)
A1	E32	—	:	Relay box (Fusible link and fuse box)
B2	E34	B/1	:	Battery
B2	E35	B/1	:	Battery
D2	E39	—	:	Body ground
B1	E42	W/1	:	Glow relay-1
C1	E43	W/1	:	Glow relay-1
B1	E44	G/2	:	Glow relay-1
C1	E45	GY/2	:	Side turn signal lamp RH
G1	E50	—	:	Fusible link and fuse box
F1	E51	L/4	:	Cooling fan relay
F1	E52	L/4	:	Air conditioner relay
G1	E53	W/3	:	Horn relay
G1	E55	L/4	:	ECM relay
D5	E56	B/2	:	Front fog lamp LH (For Europe)
C3	E59	B/2	:	Not used (For Europe)
E3	E70	BR/3	:	To A14
A2	E72	B/1	:	To E232
A4	E74	B/2	:	Front fog lamp RH (For Europe)
B3	E85	GY/2	:	Cooling fan motor
B1	E87	GY/6	:	To E248
B1	E88	B/6	:	To E249
B4	E89	Y/2	:	Crash zone sensor
B4	E90	—	:	Body ground

PASSENGER COMPARTMENT

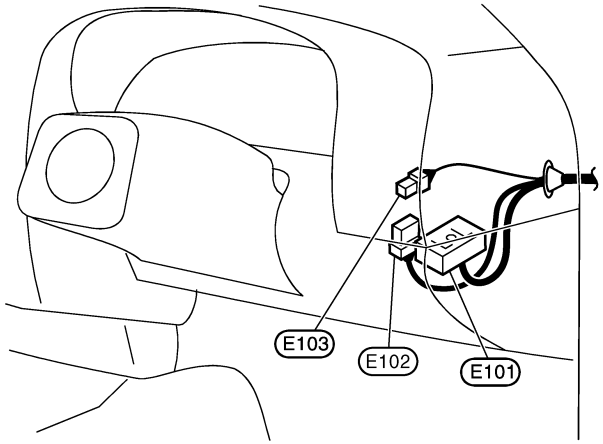

E101	SMJ	:	To M5
E102	W/6	:	To M13
E103	B/2	:	Fuse block

HEL242C

Engine Harness

INFOID:0000000003777393

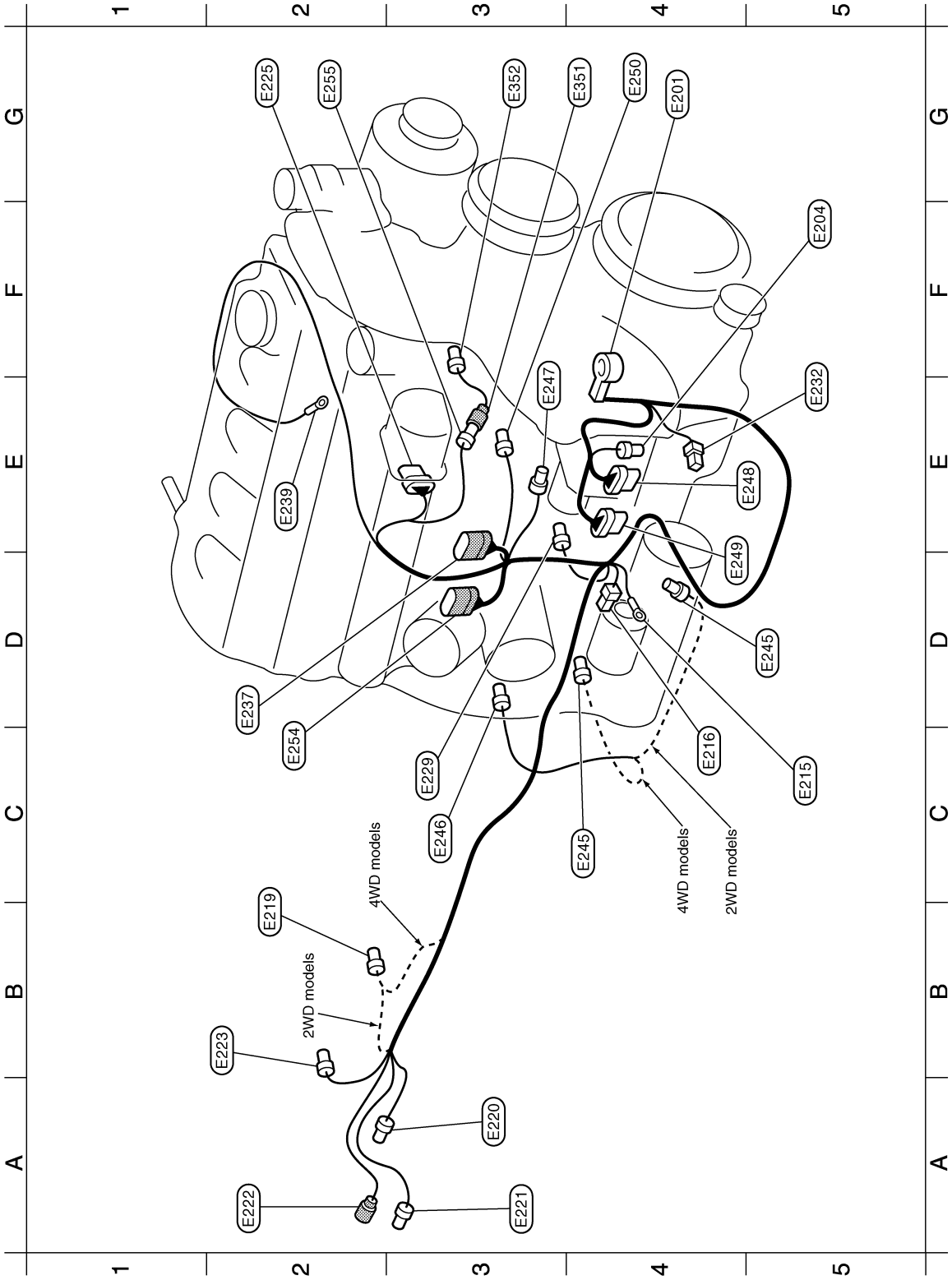

HEL243C

G4	E201	—	Battery
F5	E204	GY/2	To E29
C5	E215	—	Starter motor
C4	E216	B/1	Starter motor
B2	E219	GY/2	Back-up lamp switch
A3	E220	B/2	Park/Neutral position switch
A3	E221	GY/1	Transfer switch (4WD models)
A2	E222	GY/1	Transfer switch (4WD models)
B2	E223	GY/2	Vehicle speed sensor
G2	E225	-/5	EGR volume control valve
C3	E229	GY/1	Oil pressure switch
E5	E232	B/1	To E72
D2	E237	GY/10	To M279
E2	E239	—	Glow plug
C4,D5	E245	GY/3	Engine oil level sensor
C3	E246	-/3	Crankshaft position sensor
E3	E247	-/2	Fuel pump temperature sensor
E5	E248	GY/6	To E87
D4	E249	B/6	To E88
G4	E250	GY/2	Fuel pump
C2	E254	B/10	To M285
G2	E255	GY/2	To E351

Sub-harness

G4	E351	GY/2	To E255
G3	E352	GY/2	Engine coolant temperature sensor

HEL244C

Instrument Harness

INFOID:0000000003777397

LHD MODELS

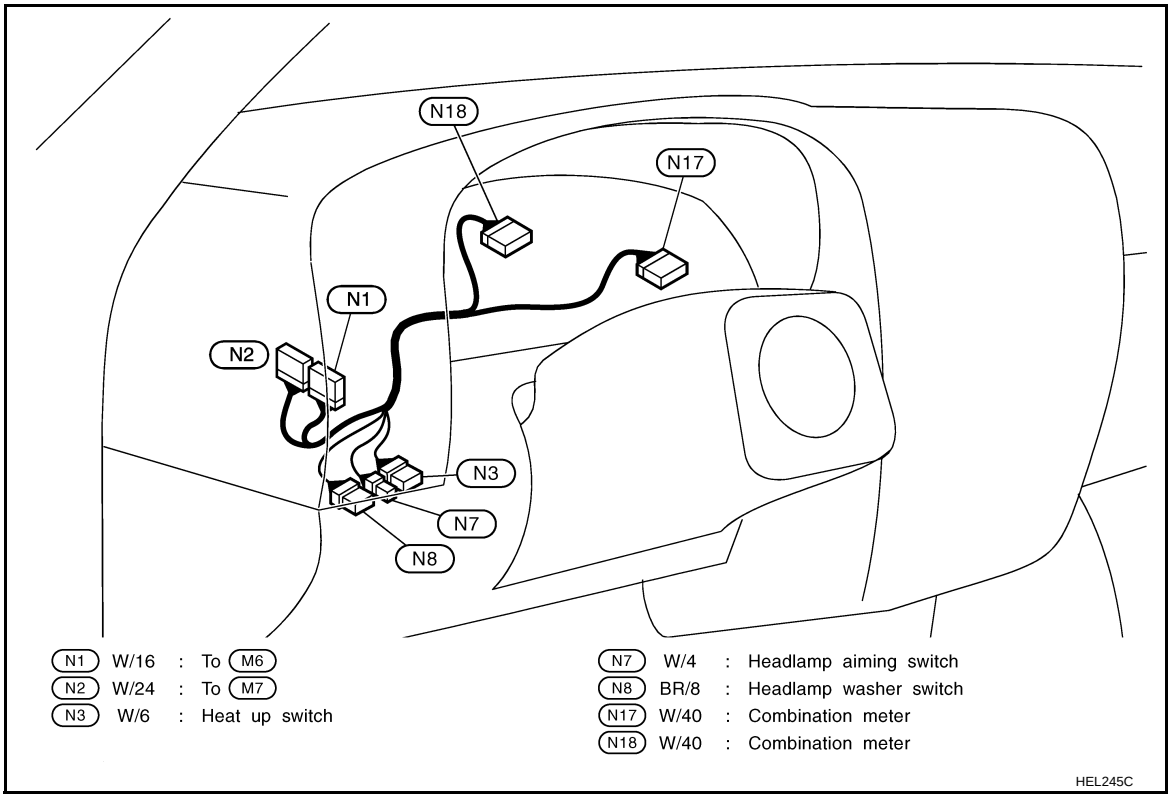

RHD MODELS

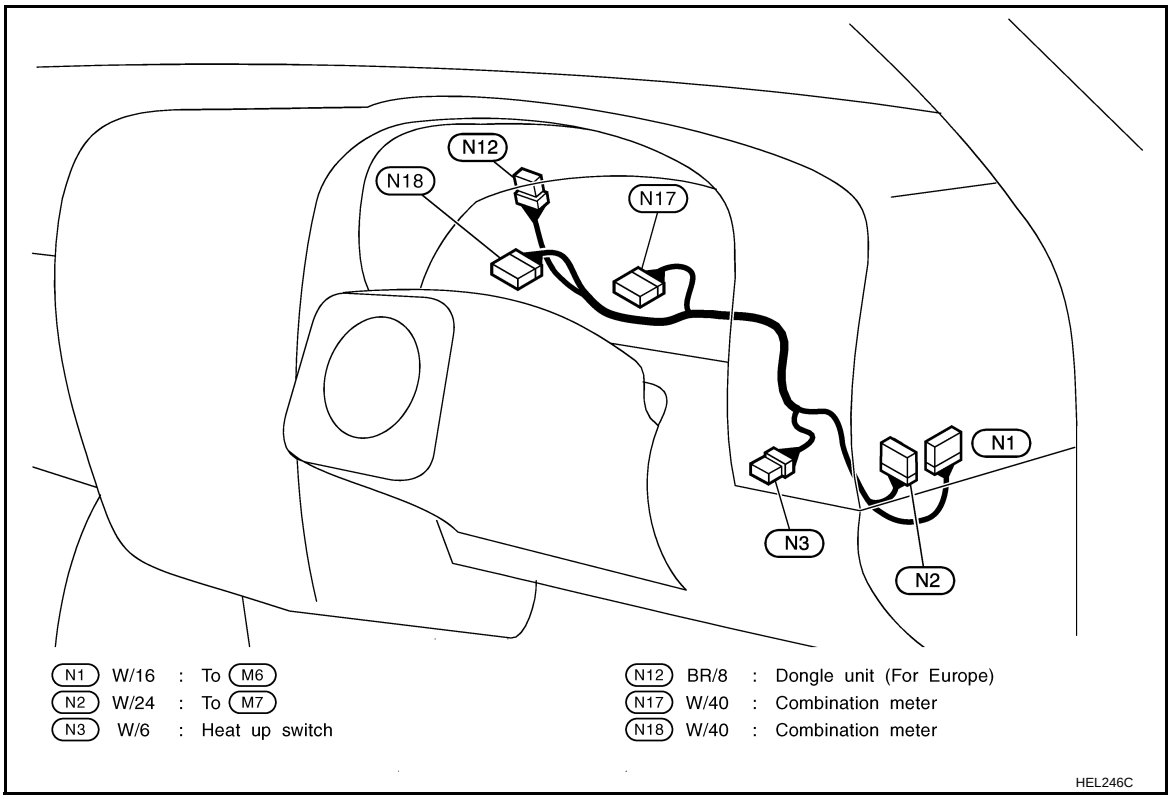

Chassis Harness and Tail Harness

INFOID:0000000003777637

Tail harness

T1	W/6	: Rear combination lamp RH (A-chassis models)
T2	W/8	: Rear combination lamp RH (Except A-chassis models)
T3	GY/2	: License plate lamp RH (With step bumper)
T4	GY/8	: To C7
T5	GY/2	: License plate lamp RH (Without step bumper)
T6	GY/2	: License plate lamp LH (Without step bumper)
T7	B/2	: License plate lamp LH (With step bumper)
T8	W/6	: Rear combination lamp LH (A-chassis models)
T9	W/8	: Rear combination lamp LH (Except A-chassis models)
T10	GY/2	: Rear fog lamp (RHD A-chassis models for Europe)
T12	GY/2	: Rear fog lamp (LHD A-chassis models for Europe)

Chassis harness

C3	GY/5	: Fuel level sensor unit
C5	GY/4	: To rear wheel sensor sub-harness (4WD models for ABS)
C6	GY/2	: Rear wheel sensor (2WD models for ABS)
C7	GY/8	: To T4
C8	W/8	: To M135
C9	W/16	: To M121

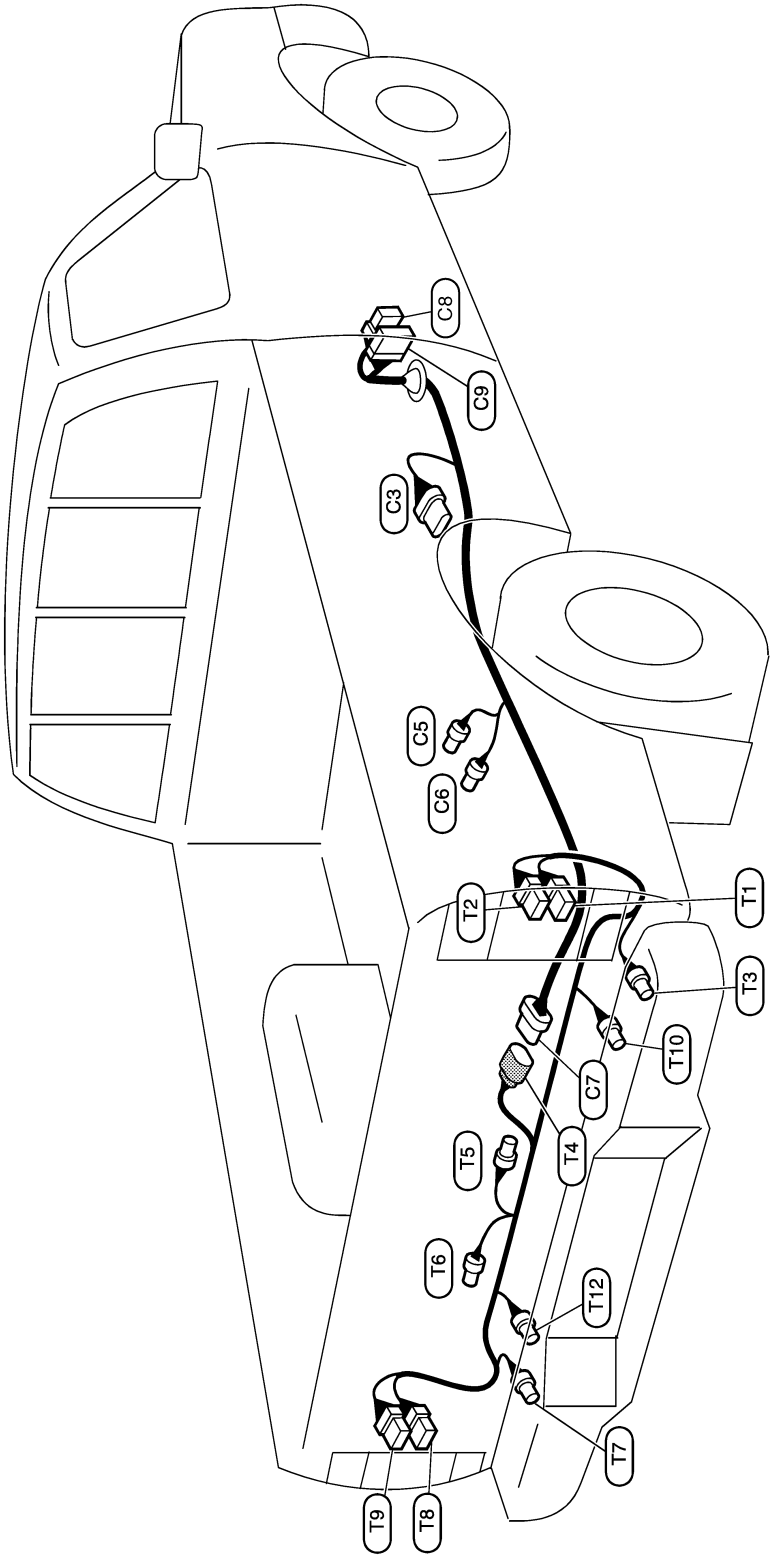

HEL247C

Room Lamp Harness/LHD Models

INFOID:0000000003777398

SINGLE AND KING CAB

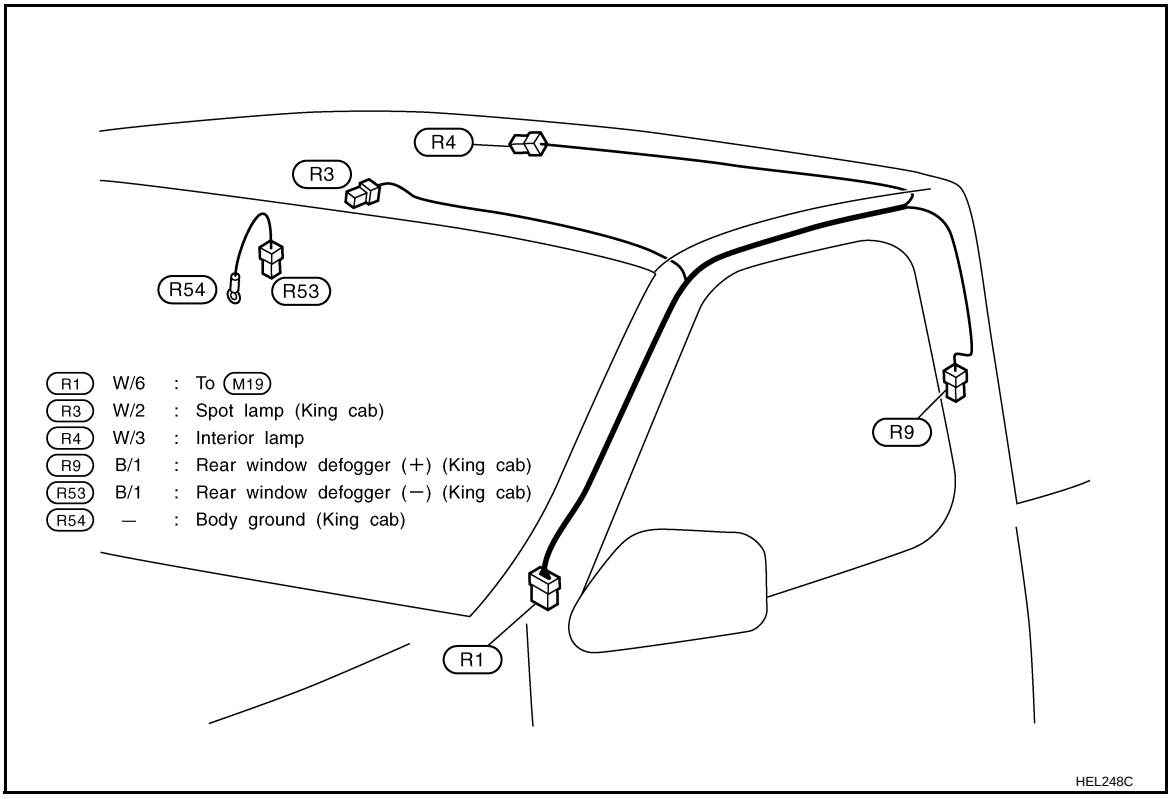

DOUBLE CAB

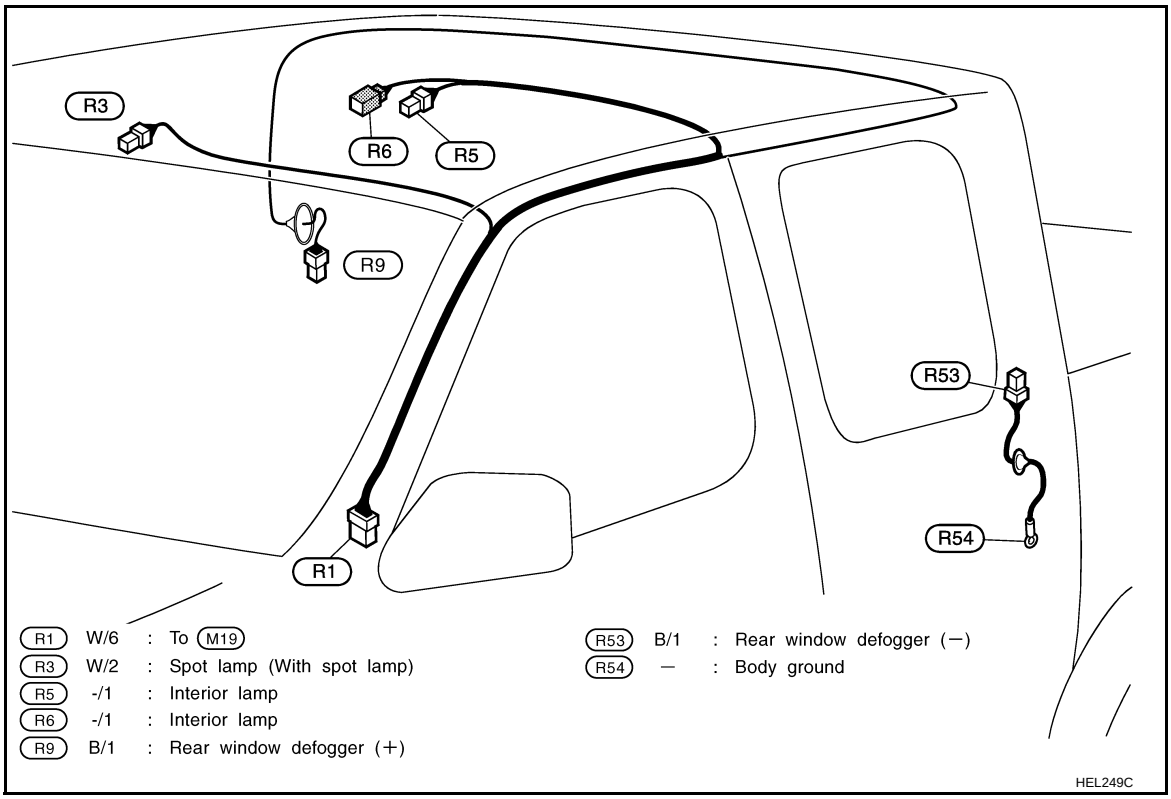

Room Lamp Harness/RHD Models

INFOID:0000000003794423

SINGLE AND KING CAB

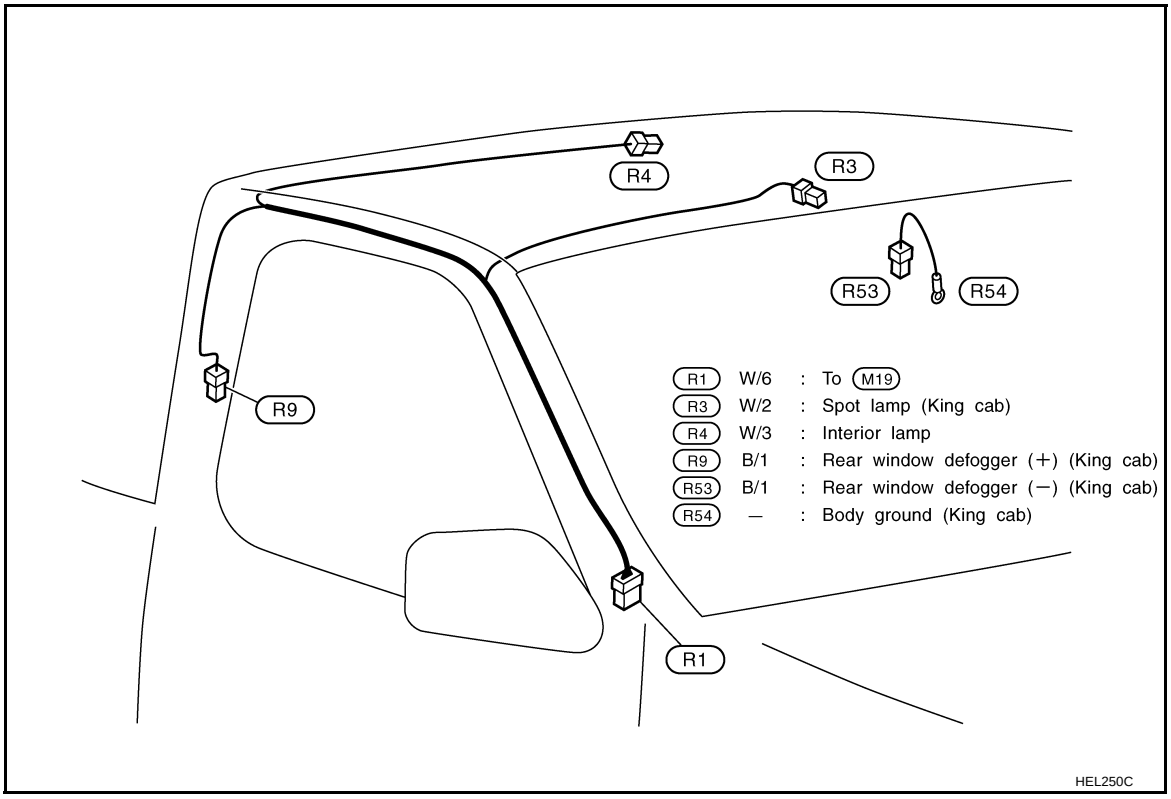

DOUBLE CAB

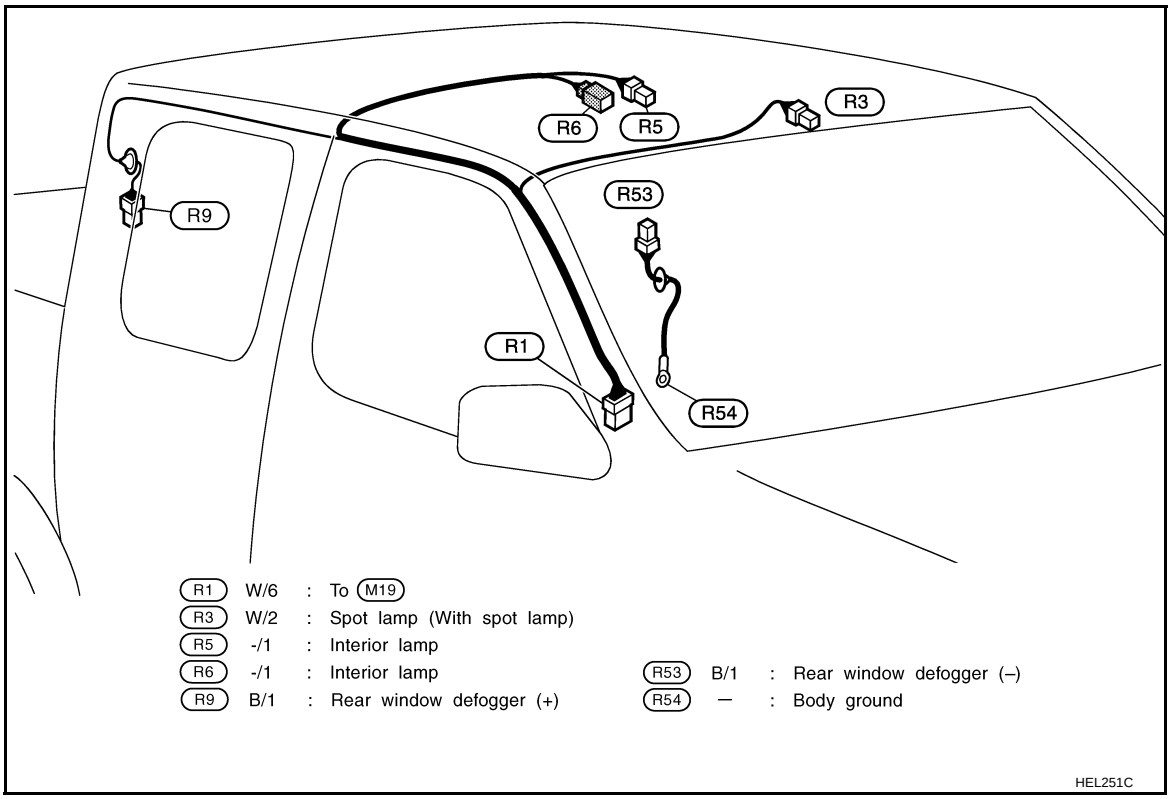

Front Door Harness (LH Side)

INFOID:0000000003777399

LHD MODELS

D1	W/16	:	To M3
D2	W/12	:	To M4 (With power window)
D3	BR/2	:	Front speaker
D4	GY/5	:	Door mirror actuator (For power door mirror)
D5	W/16	:	Power window main switch
D8	GY/2	:	Lock knob switch (With power door lock without multi-remote control system)
D9	BR/3	:	Door mirror defogger (For power door mirror)
D10	SB/4	:	Door lock actuator (With multi-remote control system)
D12	SB/6	:	Power window motor (With power window with interruption detection function)
D13	W/3	:	Power window main switch (With power window with interruption detection function)
D14	W/10	:	Door mirror remote control switch (For power door mirror)

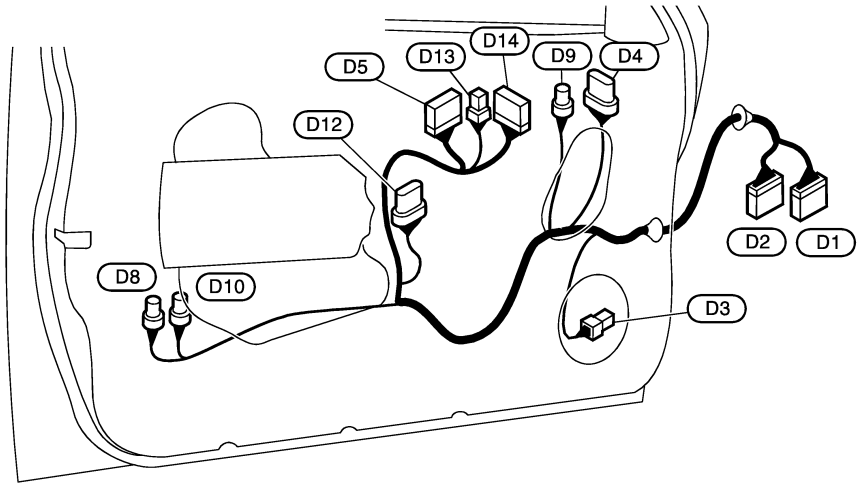

HEL252C

RHD MODELS

D31	W/10	:	To M49
D32	W/4	:	To M50 (With power window)
D33	BR/2	:	Front speaker
D34	GY/5	:	Door mirror actuator (For power door mirror)
D35	W/8	:	Power window sub-switch (With power window)
D37	B/2	:	Power window motor (With power window)
D38	GY/4	:	Door lock actuator (With power door lock)
D39	BR/3	:	Door mirror defogger (For power door mirror for Europe)

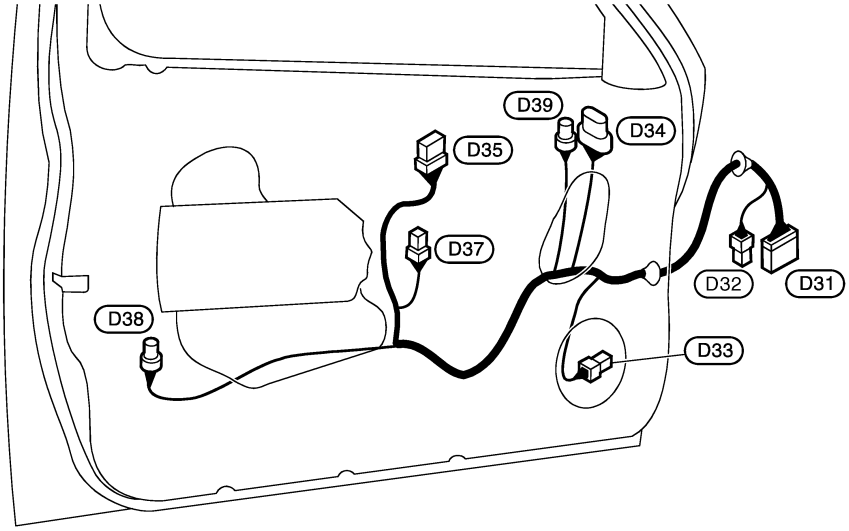

HEL253C

Front Door Harness (RH Side)

INFOID:0000000003794424

LHD MODELS

D31 W/10 : To M49
D32 W/4 : To M50 (With power window)
D33 BR/2 : Front speaker
D34 GY/5 : Door mirror actuator (For power door mirror)
D35 W/8 : Power window sub-switch (With power window)
D37 B/2 : Power window motor (With power window)
D38 GY/4 : Door lock actuator (With power door lock)
D39 BR/3 : Door mirror defogger (For power door mirror)

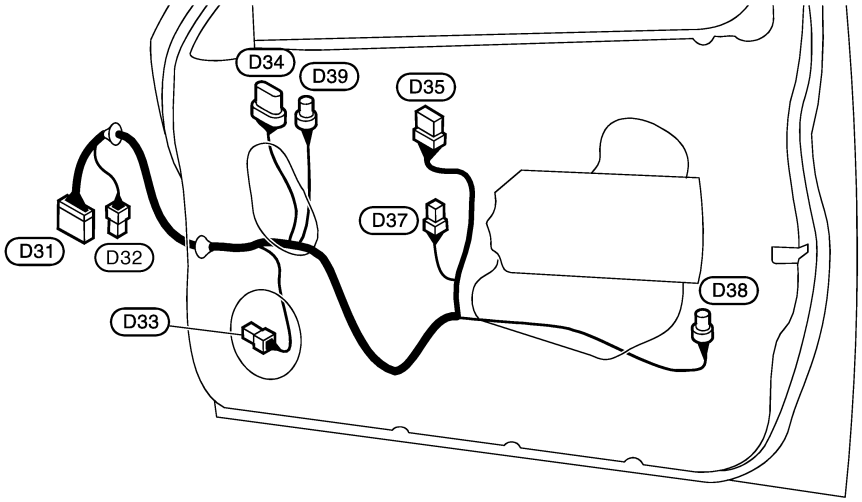

HEL254C

RHD MODELS

D1 W/16 : To M3
D2 W/12 : To M4 (With power window)
D3 BR/2 : Front speaker
D4 GY/5 : Door mirror actuator (For power door mirror)
D5 W/16 : Power window main switch
D8 GY/2 : Lock knob switch (With power door lock without multi-remote control system)
D9 BR/3 : Door mirror defogger (For power door mirror for Europe)
D10 SB/4 : Door lock actuator (With multi-remote control system)
D12 SB/6 : Power window motor (With power window)
D13 W/3 : Power window main switch (With power window)
D14 W/10 : Door mirror remote control switch (For power door mirror)

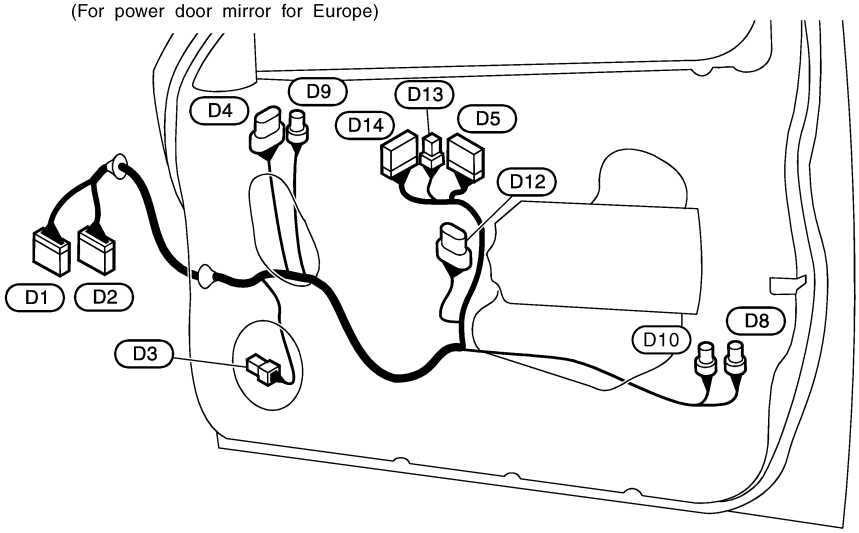

HEL255C

Rear Door Harness

INFOID:0000000003777400

LH SIDE

D54	B/2	:	Rear speaker
D55	B/2	:	Power window motor
D56	GY/4	:	Door lock actuator
D57	W/8	:	Power window sub-switch
D58	W/6	:	To M130
D59	W/4	:	To M133

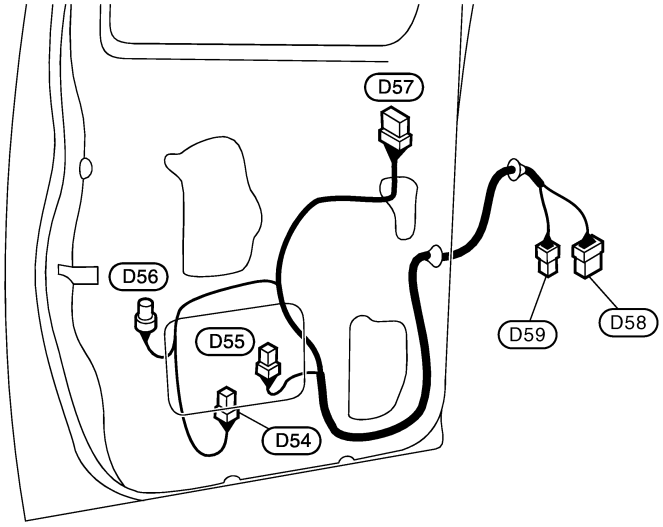

HEL256C

RH SIDE

D74	B/2	:	Rear speaker
D75	B/2	:	Power window motor
D76	GY/4	:	Door lock actuator
D77	W/8	:	Power window sub-switch
D78	W/6	:	To M131
D79	W/4	:	To M132

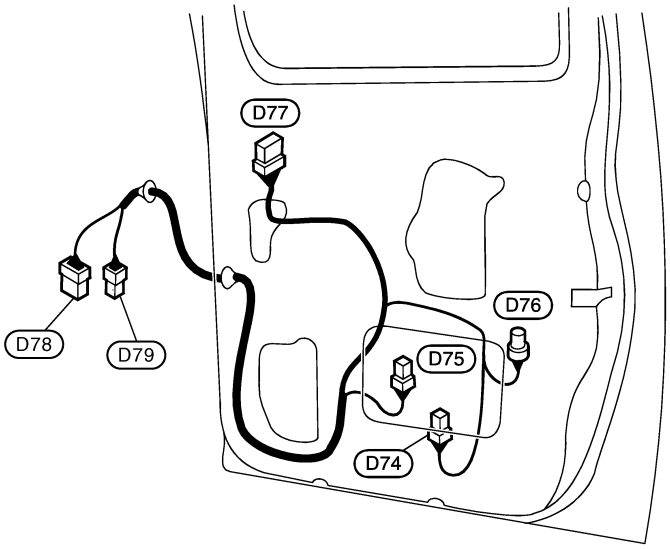

HEL257C

SMJ (SUPER MULTIPLE JUNCTION)

Terminal Arrangement

INFOID:0000000003774637

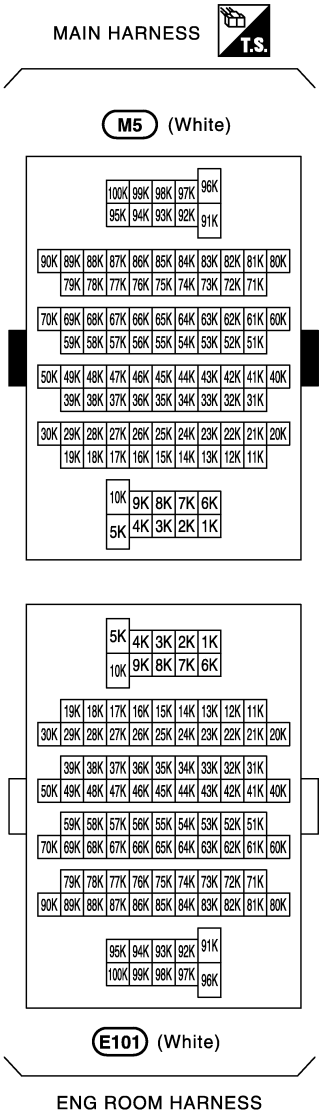

GEL227B

FUSE AND FUSIBLE LINK

Terminal Arrangement

INFOID:0000000003774794

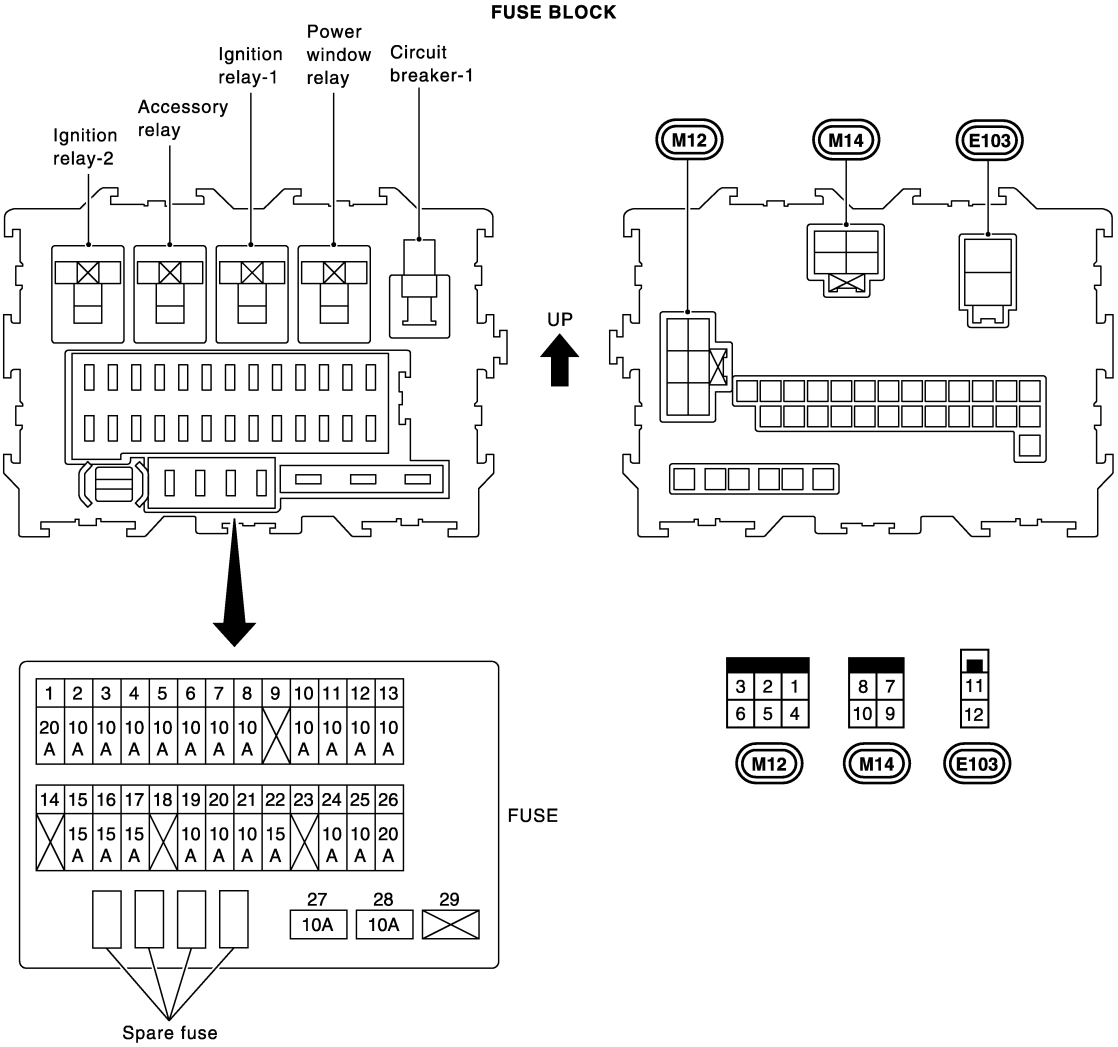

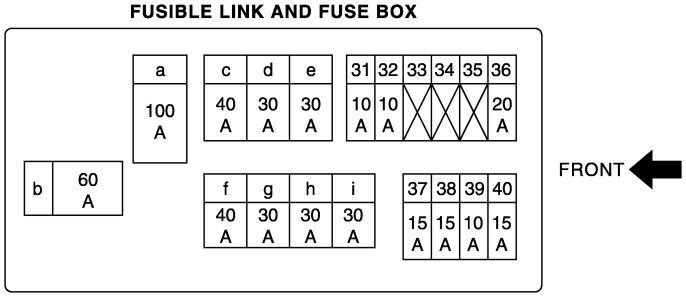

No. 31 - 40: Fuse a - i: Fusible link

GEL228B

CONTROL UNITS

Terminal Arrangement

INFOID:0000000003774795

ECM

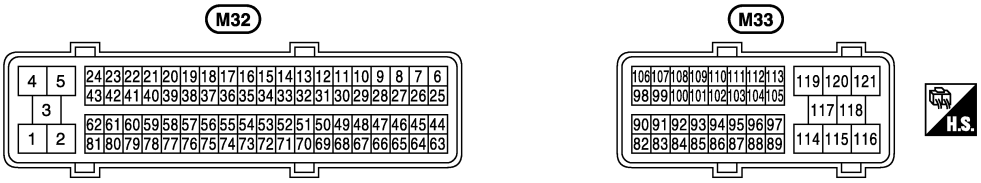

ABS actuator assembly E4

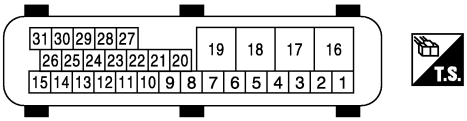

AUTO A/C CONTROL UNIT

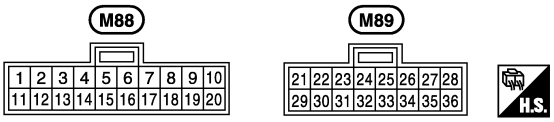

(Gray) (Gray)

BCM (BODY CONTROL MODULE)

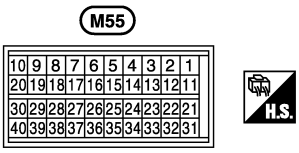

(Black)

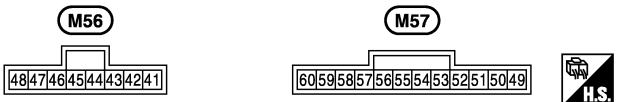

(Black) (Brown)

GEL229B