Go to SUP 7 Rev.2

BRAKE SYSTEM

SECTION BR

MODIFICATION NOTICE:

- Wiring diagrams have been changed.
- Service data and specifications (SDS) have been changed.

CONTENTS

TROUBLE DIAGNOSES 2
Schematic/4 Wheel Sensors Models.....2
Wiring Diagram - ABS -/4 Wheel Sensors LHD Models 3
Wiring Diagram - ABS -/4 Wheel Sensors RHD Models 6
SERVICE DATA AND SPECIFICATIONS (SDS) 9
General Specifications.....9

Schematic/4 Wheel Sensors Models

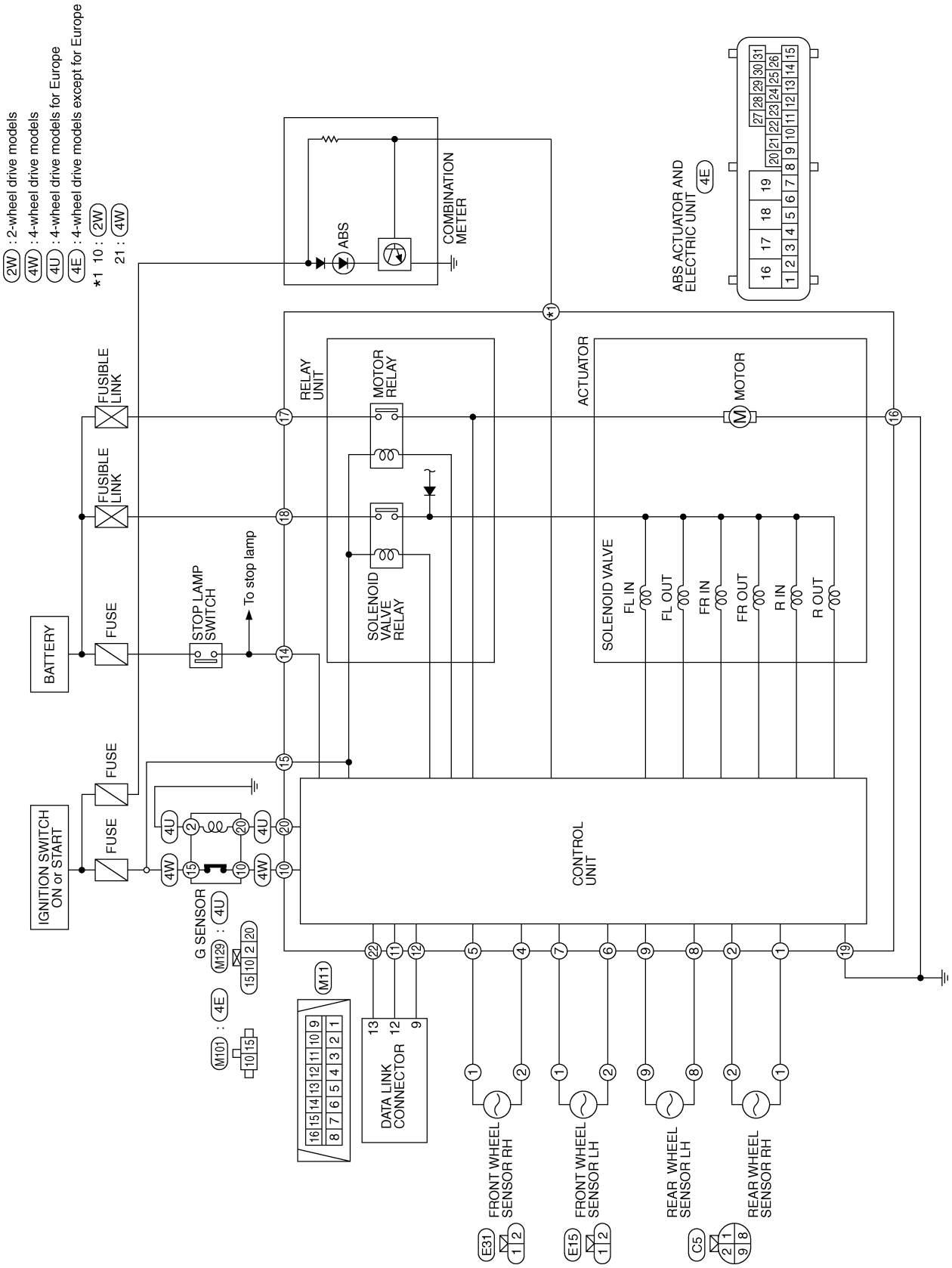

GBR060A

Wiring Diagram — ABS —/4 Wheel Sensors LHD Models

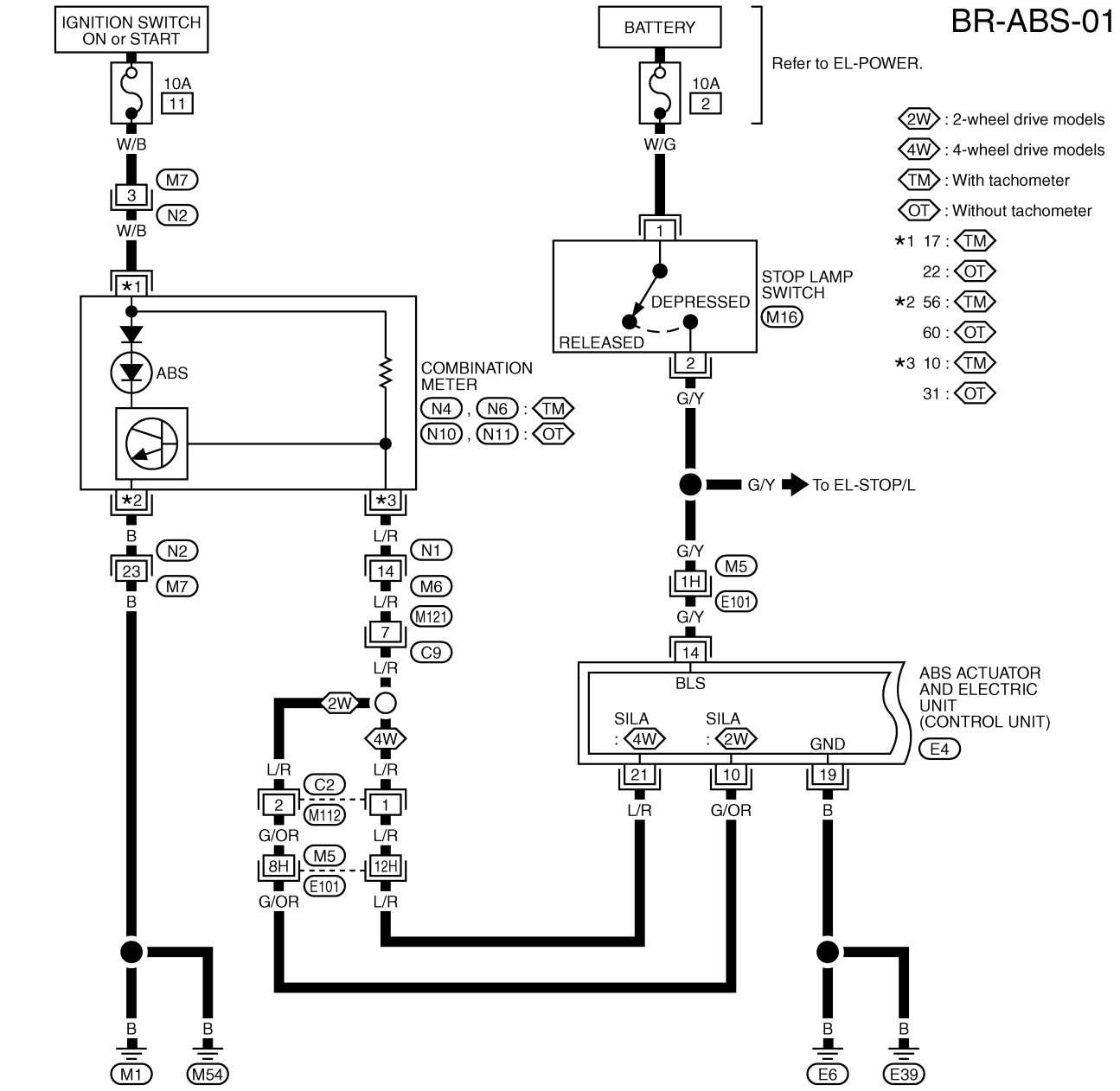

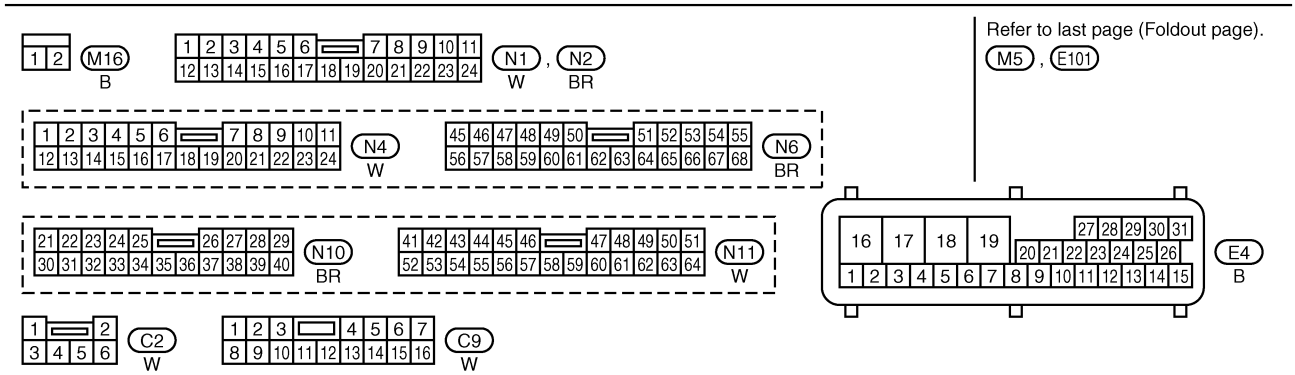

GBR061A

Wiring Diagram — ABS —/4 Wheel Sensors LHD Models (Cont'd)

BR-ABS-02

IGNITION SWITCH ON or START
BATTERY
Refer to EL-POWER.
10A 12
30A g
30A h
G/Y
L/Y
Y
4W : 4-wheel drive models
4W G/Y A Next page
G/Y
M5
12J
E101
G/Y
L/Y
Y
ABS ACTUATOR AND ELECTRIC UNIT
E4
15
17
18
MOTOR RELAY
SOLENOID VALVE RELAY
RELAY UNIT
MOTOR
M
FL IN
FL OUT
FR IN
FR OUT
R IN
R OUT
ACTUATOR
IGN
MOTOR RELAY ACT
ACTR RELAY ACT
MOTOR MON
FL IN
FL OUT
FR IN
FR OUT
R IN
R OUT
CONTROL UNIT
16
B
B
B
E6
E39

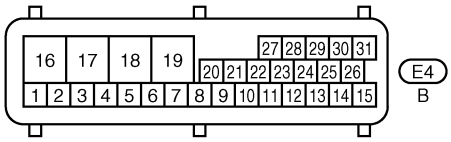

Refer to last page (Foldout page).
M5 , E101

GBR062A

Wiring Diagram — ABS —/4 Wheel Sensors LHD Models (Cont'd)

BR-ABS-03

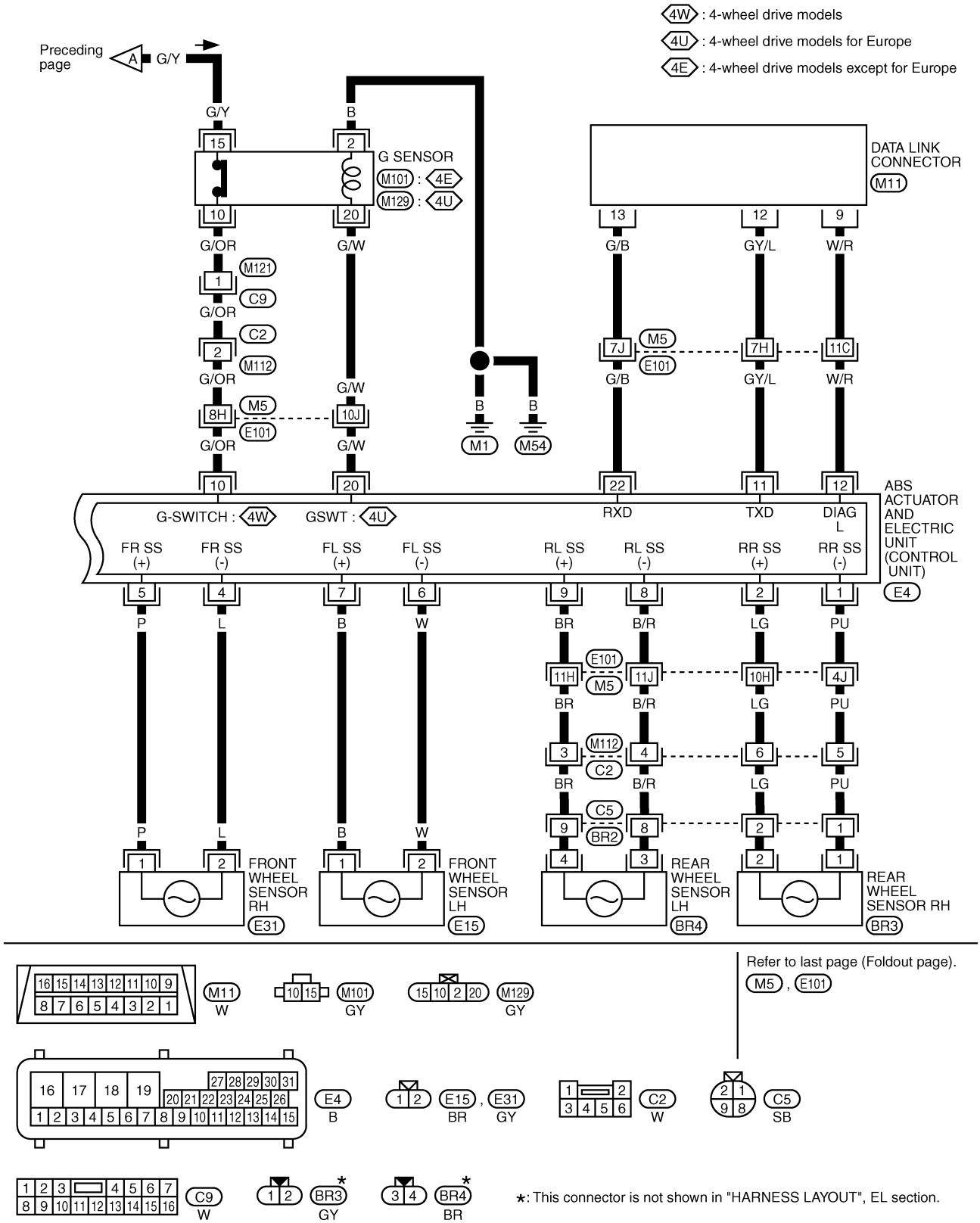

GBR063A

Wiring Diagram — ABS —/4 Wheel Sensors RHD Models

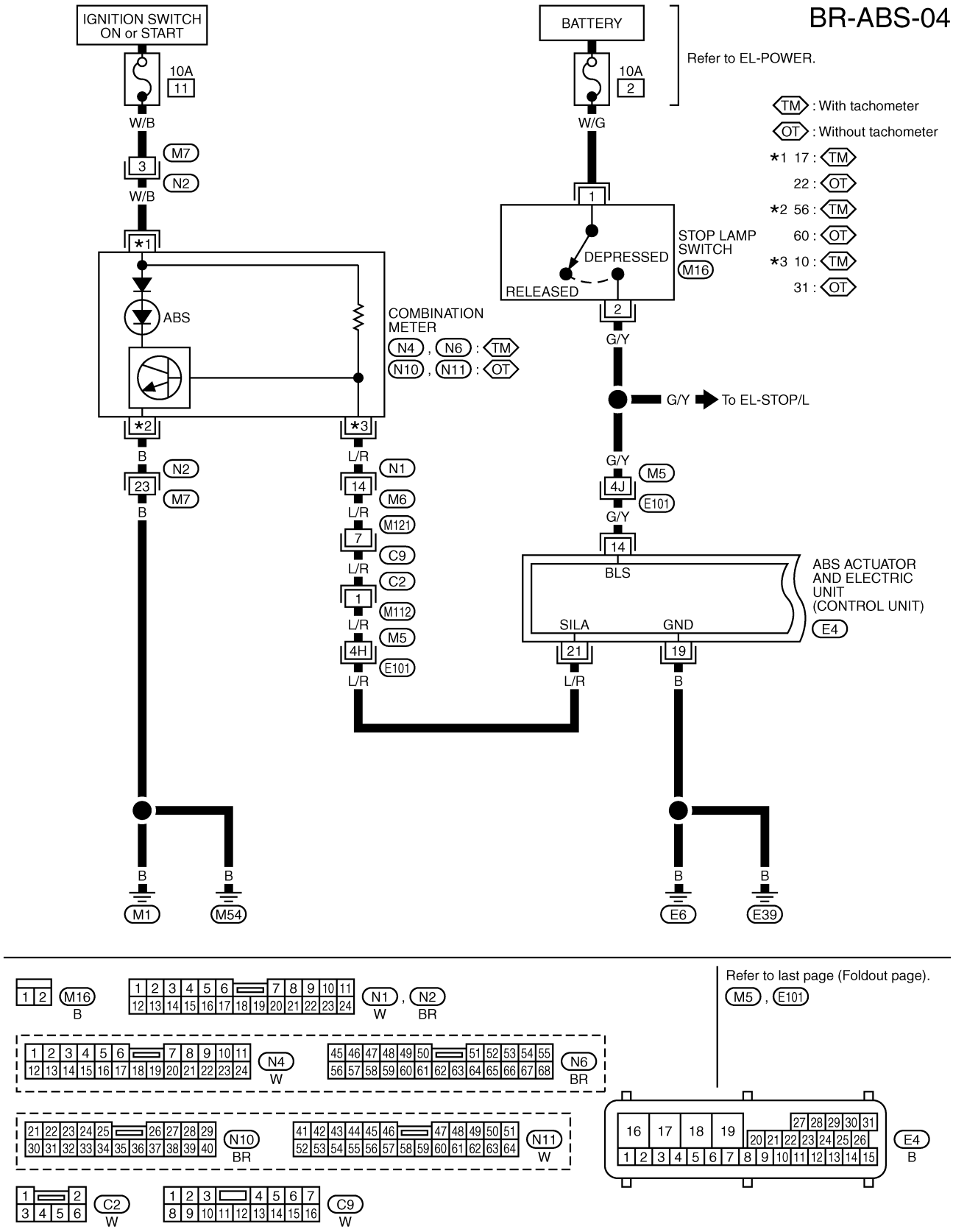

GBR064A

Wiring Diagram — ABS —/4 Wheel Sensors RHD Models (Cont'd)

BR-ABS-05

IGNITION SWITCH ON or START
BATTERY
Refer to EL-POWER.
10A 12
30A g
30A h
G/Y
L/Y
Y
G/Y B Next page
G/Y
4G
M5
E101
G/Y
L/Y
Y
ABS ACTUATOR AND ELECTRIC UNIT
E4
15
17
18
MOTOR RELAY
SOLENOID VALVE RELAY
RELAY UNIT
MOTOR
M
FL IN
FL OUT
FR IN
FR OUT
R IN
R OUT
ACTUATOR
IGN
MOTOR RELAY ACT
ACTR RELAY ACT
MOTOR MON
FL IN
FL OUT
FR IN
FR OUT
R IN
R OUT
CONTROL UNIT
16
B
B
B
E6
E39

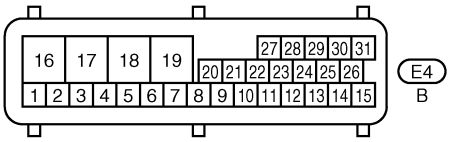

Refer to last page (Foldout page).
M5 , E101

GBR065A

Wiring Diagram — ABS —/4 Wheel Sensors RHD Models (Cont'd)

BR-ABS-06

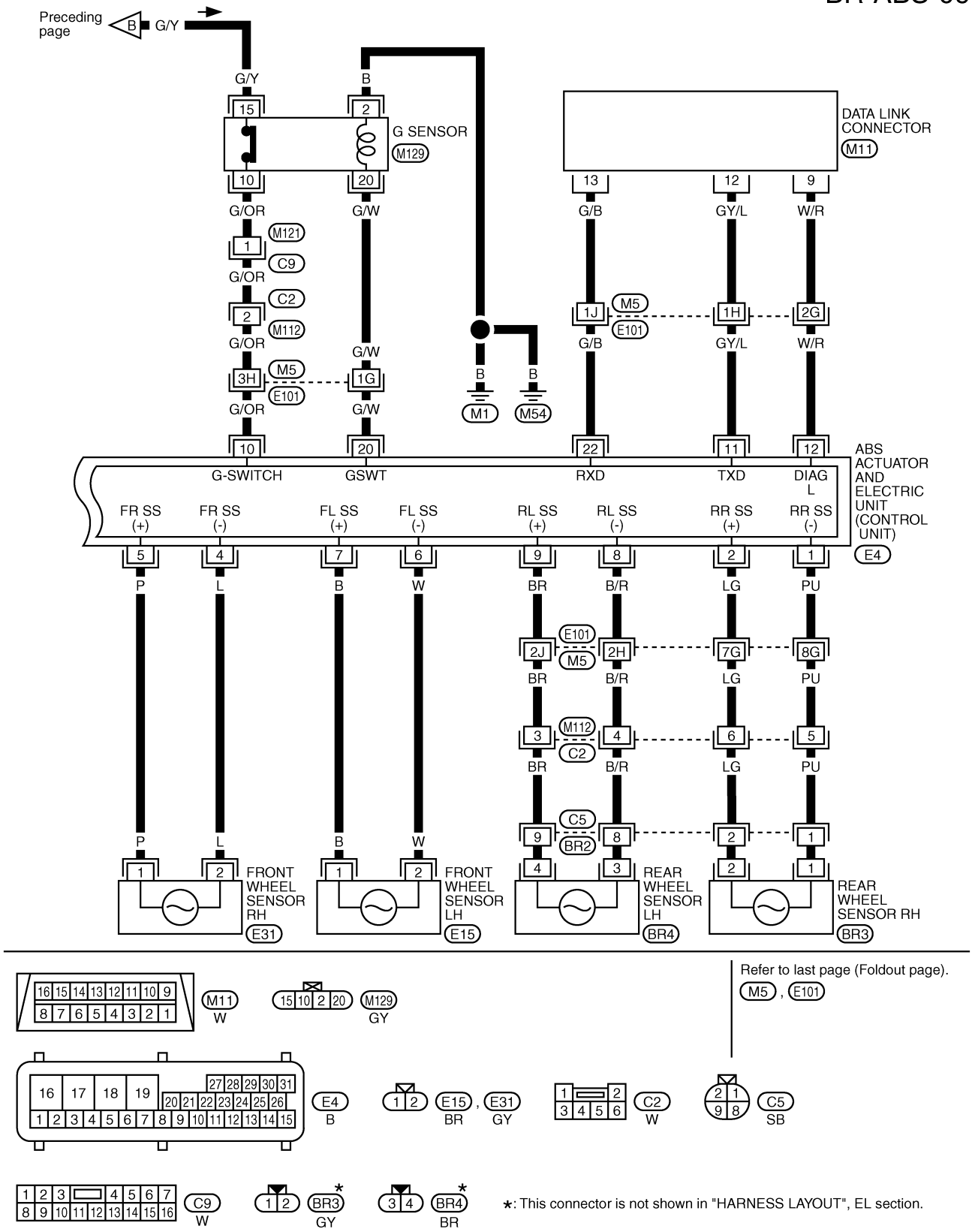

GBR066A

General Specifications

2WD MODELS

Destination	Australia	Except for Australia		
Applied model	KA24DE	TD27	YD25 (With ABS)	YD25 (Without ABS)
Front brake				
Type	CL28VD			CL33VD
Cylinder bore diameter mm (in)	42.8 (1.685) x 2			46.4 (1.827) x 2
Pad dimension mm (in) Length x width x thickness	146.6 x 48.5 x 10 (5.77 x 1.909 x 0.39)			132.0 x 52.5 x 11 (5.20 x 2.067 x 0.43)
Rotor outer diameter x thickness mm (in)	260 x 26 (10.24 x 1.02)			283 x 28 (11.14 x 1.10)
Rear brake				
Type	LT26B			LT30A
Wheel cylinder bore diameter mm (in)	22.22 (7/8)			
Lining dimension mm (in) Length x width x thickness	249.6 x 40 x 5.5 (9.83 x 1.57 x 0.217)			296 x 50 x 6.1 (11.65 x 1.97 x 0.240)
Drum inner diameter mm (in)	260.0 (10.24)			295.0 (11.61)
Master cylinder bore diameter mm (in)	23.81 (15/16)			25.4 (1)
Control valve				
Type	LSV			
Split point x reducing ratio kPa (bar, kg/cm^2, psi)	(Variable) x 0.15			
Brake booster				
Model	M195T	S230	M195T	M215T
Diaphragm diameter mm (in)	Primary: 205 (8.07) Secondary: 180 (7.09)	230 (9.06)	Primary: 205 (8.07) Secondary: 180 (7.09)	Primary: 230 (9.06) Secondary: 205 (8.07)
Recommended brake fluid	DOT 3			

General Specifications (Cont'd)

4WD MODELS

Destination	Australia		Except for Australia	
Applied model	VG33	ZD30	QD32	KA24DE
Front brake				
Type	CL33VD		CL28VD	
Cylinder bore diameter mm (in)	46.4 (1.827) x 2		42.8 (1.685) x 2	
Pad dimension mm (in) Length x width x thickness	132.0 x 52.5 x 11 (5.20 x 2.067 x 0.43)		146.6 x 48.5 x 10 (5.77 x 1.909 x 0.39)	
Rotor outer diameter x thickness mm (in)	283 x 28 (11.14 x 1.10)		260 x 26 (10.24 x 1.02)	
Rear brake				
Type	LT30A			
Wheel cylinder bore diameter mm (in)	22.22 (7/8)			
Lining dimension mm (in) Length x width x thickness	296.0 x 50.0 x 6.1 (11.65 x 1.969 x 0.240)			
Drum inner diameter mm (in)	295 (11.61)			
Master cylinder bore diameter mm (in)	25.4 (1)		23.81 (15/16)	
Control valve				
Type	LSV			
Split point x reducing ratio kPa (bar, kg/cm^2, psi)	(Variable) x 0.15			
Brake booster				
Model	M215T		M195T	
Diaphragm diameter mm (in)	Primary: 230 (9.06) Secondary: 205 (8.07)		Primary: 205 (8.07) Secondary: 180 (7.09)	
Recommended brake fluid	DOT 3			