Go to SUP6 1st Rev.Vol1

GENERAL INFORMATION

SECTION GI

MODIFICATION NOTICE:

- QD32 engine model with A/T has been added.
- KA24DE engine emission control system has been modified.
- VG33E engine model has been introduced for Australia.
- Auto A/C for Europe has been modified.

CONTENTS

CONSULT-II CHECKING SYSTEM 2
Function and System Application 2
Nickel Metal Hydride Battery Replacement.....2
Checking Equipment.....3
CONSULT-II Data Link Connector (DLC) Circuit 3

IDENTIFICATION INFORMATION.....4
Model Variation 4
Identification Number.....7
Dimensions 9

This modification has been included in production starting with the following vehicle identification numbers (Chassis number):

For the Middle East

JN6BD21S*3X080001
JN6BD22S*3X060001
JN6BD23S*3X130001
JN6DD21S*3X075001
JN6DD22S*3X070002
JN6DD23S*3X130003
JN6DD22Y*3X025003
JN6DD23Y*3X025001
JN6HD21S*3X045001
JN6HD23S*3X055001
JN6BD23S*3A750101
JN6DD23S*3A750101
JN6HD23S*3A750101
JN6DD23Y*3A750101

For Australia and New Zealand

JN1ADGD22A0031001
JN1AFGD22A0022001
JN1ANUD22A0015001
JN1BNUD22A0011001
JN1CDGD22A0031001
JN1CFGD22A0022001
JN1CRUD22A0010001
JN1CNUD22A0025001
JN1CPGD22A0010501

For Venezuela and Ecuador

JN1ADGD223X420101
JN1ADUD223X420101
JN1ANUD223X420101
JN1CDGD223X430101
JN1CPGD223X450101
JN1CDUD223X430201
JN1CNUD223X440101

For Peru

JN1ADGD223X420101
JN1ADUD223X420101
JN1ANUD223X420101
JN1CDGD223X430101
JN1CPGD223X450101
JN1CDUD223X430201
JN1CNUD223X440101

For Europe

JN1APGD22U0055001
JN1APUD22U0035001
JN1BPGD22U0032001
JN1BPUD22U0083001
JN1CPGD22U0045001
JN1CPUD22U0078001
JN1ADGD22U0021001
JN1BDGD22U0031001
JN1BDUD22U0031001
JN1CDUD22U0031001

Except for the Middle East, Europe, Israel, Australia, New Zealand, Venezuela, Ecuador and Peru

JN1ADGD22Z0030201
JN1AHGD22Z0030801
JN1ADUD22Z0020301
JN1AJUD22Z0030801
JN1ANUD22Z0000201
JN1CDGD22Z0040301
JN1CHGD22Z0071401
JN1CPGD22Z0000501
JN1CDUD22Z0020801
JN1CJUD22Z0053001
JN1CNUD22Z0001501

Function and System Application

Diagnostic test mode	Function	ENGINE	A/T	ABS	AIR BAG
Work support	This mode enables a technician to adjust some devices faster and more accurate by following the indications on CONSULT-II.	x	x	—	—
Self-diagnostic results	Self-diagnostic results can be read and erased quickly.	x	x	x	x
Trouble diagnostic record	Current self-diagnostic results and all trouble diagnostic records previously stored can be read.	—	—	—	x
ECU discriminated No.	Classification number of a replacement ECU can be read to prevent an incorrect ECU from being installed.	—	—	—	x
Data monitor	Input/Output data in the ECU (ECM) can be read.	x	x	x	—
DTC work support	This mode enables a technician to set operating conditions to confirm self-diagnosis status/results.	—	x	—	—
Active test	Diagnostic Test Mode in which CONSULT-II drives some actuators apart from the ECMs and also shifts some parameters in a specified range.	x	—	x	—
ECU (ECM) part number	ECU (ECM) part number can be read.	x	x	x	—
Function test	Conducted by CONSULT-II instead of a technician to determine whether each system is “OK” or “NG” (No Good).	x	x	x	x

x: Applicable

Nickel Metal Hydride Battery Replacement

CONSULT-II contains a nickel metal hydride battery. When replacing the battery obey the following:

WARNING:

Replace the nickel metal hydride battery with Genuine CONSULT-II battery only. Use of another battery may present a risk of fire or explosion. The battery may present a fire or chemical burn hazard if mistreated. Do not recharge, disassemble of dispose of in fire.

Keep the battery out of reach of children and discard used battery conforming to the local regulations.

Checking Equipment

When ordering the below equipment, contact your NISSAN distributor.

Tool name	Description
NISSAN CONSULT-II ① CONSULT-II unit (Tester internal soft: Resident version 3.3.0) and accessories ② Program card AED01C for diagnostic, AEN00A/00B for NATS. To confirm the best combination of those softwares, refer to CONSULT-II Operation Manual.	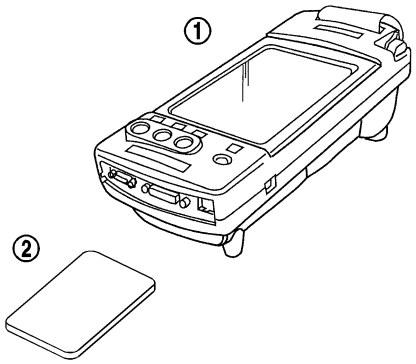 SGI083A

NOTE:
- **The CONSULT-II must be used in conjunction with a program card. CONSULT-II does not require loading (Initialization) procedure.**
- **Be sure the CONSULT-II is turned off before installing or removing a program card.**

CONSULT-II Data Link Connector (DLC) Circuit

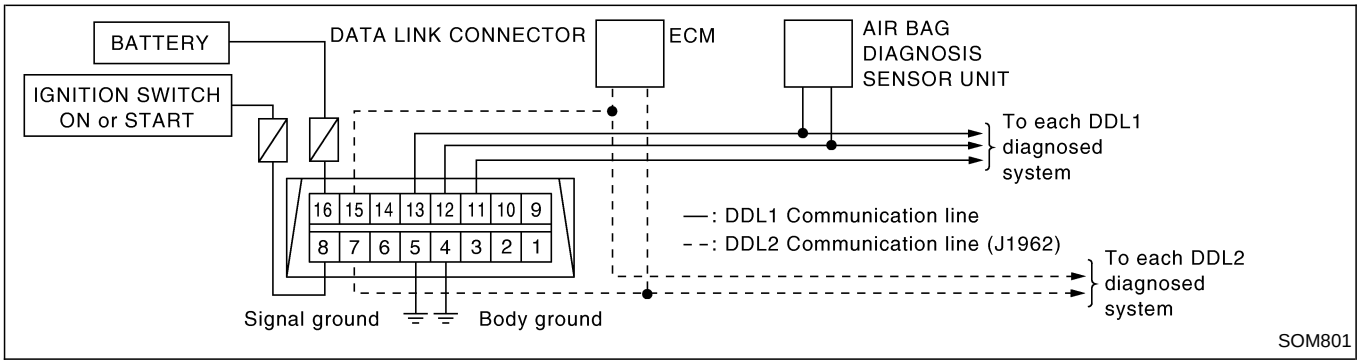

INSPECTION PROCEDURE

If the CONSULT-II cannot diagnose the system properly, check the following items.

Symptom	Check item
CONSULT-II cannot access any system.	● CONSULT-II DLC power supply circuit (Terminal 8) and ground circuit (Terminal 4) (For detailed circuit, refer to EC section “MIL & Data Link Connectors”.) ● CONSULT-II DDL cable
CONSULT-II cannot access individual system. (Other systems can be accessed.)	● CONSULT-II program card (Check the appropriate CONSULT-II program card for the system. Refer to “Checking Equipment” above.) ● Power supply and ground circuit for the control unite of the system (For detailed circuit, refer to wiring diagram for each system.) ● Open or short circuit between the system and CONSULT-II DLC (For detailed circuit, refer to wiring diagram for each system.)

Model Variation

PICKUP (2WD)

Destination	Class			Model		Engine	Transmission	Differential carrier
	Cab	Wheelbase	Grade	LH drive	RH drive			
General areas (Except for the Middle East, Australia and Europe)	Single Cab	Long	STD	ABGGLCFD22EWL	ABGGRCFD22EWL	KA24DE	FS5W71C	C200
				AVPGLCFD22NWL	AVPGRCFD22NWL	TD27		
	Double Cab		STD	CBGGLCFD22EWL	CBGGRCFD22EWL	KA24DE		
				CVPGLCFD22NWL	CVPGRCFD22NWL	TD27		
				CBGGLCAD22EWN	—	KA24DE	RE4R01A	
			ST	CBGGLEFD22EWL	—		FS5W71C	
			SE	CBGGLFFD22EWN	—			
				CBGGLFAD22EWN			RE4R01A	
				CVPGLFFD22NWN		TD27	FS5W71C	
	4WD appearance			CVLGLFFD22UWG	CVLGRFFD22UWG	YD25DDTi	FS5R30A	
Australia	Single Cab	Long	STD	—	ABGGRCFD22EML	KA24DE	FS5W71C	C200
			DX	—	ABGGRDFD22EML			
					ABGGRDBD22EML		RE4R01A	
					ALBGRDFD22EML	VG30E	FS5R30A	
					ALBGRDAD22EML		RE4R01A	
	Double Cab		DX	—	CBGGRDFD22EML	KA24DE	FS5W71C	
					CBGGRDBD22EML		RE4R01A	
					CLBGRDFD22EML	VG30E	FS5R30A	
					CLBGRDAD22EML		RE4R01A	
			ST	—	CBGGREFD22EML	KA24DE	FS5W71C	
					CLBGREFD22EML	VG30E	FS5R30A	
					CLBGREAD22EML		RE4R01A	
Middle East	Single Cab	Short	DX	ABEALDFD22SKL	—	Z24S	FS5W71C	C200
				AVPALDFD22NKL		TD27		
				ABGALDFD22EKL		KA24DE		
			ST	ABEALEFD22SKL	—	Z24S		
				ABGALEFD22EKL		KA24DE		
		Long	STD	ABEGLCFD22SKL	—	Z24S		
				ABGGLCFD22EKL		KA24DE		
	Double Cab		DX	CBEGLDFD22SKL	—	Z24S	FS5W71C	
				CVPGLDFD22NKL		TD27		
				CBGGLDFD22EKL		KA24DE		
			ST	CBEGLEFD22SKL	—	Z24S		
				CBGGLEFD22EKL		KA24DE		
				CBGGLEAD22EKL			RE4R01A	
			SE	CBGGLFFD22EKL	—	KA24DE	FS5W71C	
				CBGGLFAD22EKL			RE4R01A	
Europe	Single Cab	Long	STD	ABGGLCFD22EQL	—	KA24DE	FS5W71C	C200*
				AVLGLCFD22UQL		YD25DDTi	FS5R30A	
			DX	ABGGLDFD22EQL	—	KA24DE	FS5W71C	
				AVLGLDFD22UQL	AVLGRDFD22UQL	YD25DDTi	FS5R30A	
	King Cab		DX	BBGGLDFD22EQN	—	KA24DE	FS5W71C	
				BVLGLDFD22UQN	BVLGRDFD22UQN	YD25DDTi	FS5R30A	
	4WD appearance		DX	BVLGLDFD22UQG	—	YD25DDTi	FS5R30A	
			ST	BVLGLEFD22UQG	—			
	Double Cab		DX	CVLGLDFD22UQN	CVLGRDFD22UQN			
	4WD appearance		DX	CVLGLDFD22UQG	—			
			ST	CVLGLEFD22UQG	—			

PICKUP (4WD)

Destination	Class			Model		Engine	Transmission	Differential carrier		Transfer
	Cab	Wheelbase	Grade	LH drive	RH drive			Front	Rear	
General areas (Except for the Middle East, Australia and Europe)	Single Cab	Long	STD	ABGULCFD22EWL	ABGURCFD22EWL	KA24DE	FS5W71C	R180	C200	TX10
				AWSULCFD22TWL	AWSURCFD22TWL	ZD30DDT	FS5R30A			
				AVRULCFD22NWL	AVRURCFD22NWL	QD32				
	Double Cab		STD	CBGULCFD22EWN	CBGURCFD22EWN	KA24DE	FS5W71C			
				CWSULCFD22TWN	CWSURCFD22TWN	ZD30DDT	FS5R30A			
				CVRULCFD22NWN	CVRURCFD22NWN	QD32				
				CVRULCAD22NWN	—	QD32	RE4R01A			
			SE	CBGULFFD22EWN	—	KA24DE	FS5W71C			
				CWSULFFD22TWN	CWSURFFD22TWN	ZD30DDT	FS5R30A			
				CVRULFFD22NWN	CVRURFFD22NWN	QD32				
				CVRULFAD22NWN	—	QD32	RE4R01A			
Australia	Single Cab	Long	STD	—	AWSURCFD22TML	ZD30DDT	FS5R30A	R180	C200	
			DX	—	AWSURDFD22TML					
	King Cab		ST	—	BWSUREFD22TMN					
	Double Cab		DX	—	CLPURDFD22EMN	VG33E				
					CWSURDFD22TMN	ZD30DDT				
			ST	—	CLPUREFD22EMN	VG33E				
					CWSUREFD22TMN	ZD30DDT				
Middle East	Single Cab	Long	DX	ABGULDFD22EKL	—	KA24DE	FS5W71C	R180	C200	TX10
	Double Cab			CBGULDFD22EKN						
Europe	Single Cab	Long	STD	AVLULCFD22UQL	AVLURCFD22UQL	YD25DDTi	FS5R30A	R180	C200*	TX10
			DX	AVLULDFD22UQL	AVLURDFD22UQL					
	King Cab		DX	BBGULDFD22EQN	—	KA24DE	FS5W71C			
				BVLULDFD22UQN	BVLURDFD22UQN	YD25DDTi	FS5R30A			
			ST	BBGULEFD22EQN	—	KA24DE	FS5W71C			
				BVLULEFD22UQN	BVLUREFD22UQN	YD25DDTi	FS5R30A			
			SE	BVLULFFD22UQN	BVLURFFD22UQN					
	Double Cab		DX	CBGULDFD22EQN	—	KA24DE	FS5W71C			
				CVLULDFD22UQN	CVLURDFD22UQN	YD25DDTi	FS5R30A			
			ST	CBGULEFD22EQN	—	KA24DE	FS5W71C			
				CVLULEFD22UQN	CVLUREFD22UQN	YD25DDTi	FS5R30A			
			SE	CVLULFFD22UQN	CVLURFFD22UQN					

Model Variation (Cont'd)

Prefix and suffix designations (Pickup)

A BG G L C F D22 E W L

L: Regular rear body
N: Smooth rear body
G: 4WD appearance model (2WD)

W: Except for Australia, the Middle East and Europe
M: Australia
K: Middle East
Q: Europe

S: Carburetor engine
E: Multiport fuel injection system engine
N: Diesel engine
T: Turbocharged engine
U: Turbocharged engine with intercooler

F: 5-speed floor shift manual transmission
B: 4-speed column shift automatic transmission
A: 4-speed floor shift automatic transmission

C: STD model D: DX model E: GL, ST model F: SGL, SE model

L: LH drive R: RH drive

A: Standard wheelbase (2WD) G: Long wheelbase (2WD)
U: Long wheelbase (4WD)

BE: Z24S engine BG: KA24DE engine LB: VG30E engine LP: VG33E engine
VL: YD25DDTi engine VP: TD27 engine WS: ZD30DDT engine VR: QD32 engine

A: Single Cab B: King Cab C: Double Cab

Identification Number

VEHICLE IDENTIFICATION NUMBER

Prefix and suffix designations

For the Middle East

JN6 D D22 S * 3 X XXXXXX

Vehicle serial number

Manufacturing plant
X: Hiratsuka A: Ageo

Model year
3: 2003 model year

Check digit (0 to 9 or X)
The code for the check digit is determined by mathematical computation.

Axle type
S: 2WD Y: 4WD

Model
D21 & D22: model D22 single cab
D23: model D22 double cab

Engine
B: Z24S engine D: KA24DE engine H: TD27 engine

JN6: Nissan, Japan produced vehicle

For Australia and New Zealand

JN1 A F G D22 A 0 XXXXXX

Vehicle serial number

0: Stopgap (no meaning)

A: For Australia and New Zealand

Model

G: Long wheelbase (2WD)
U: Long wheelbase (4WD)

D: KA24DE engine F: VG30E engine R: VG33E engine N: ZD30DDT engine P: YD25DDTi engine

A: Single Cab B: King Cab C: Double Cab

JN1: Japan produced vehicle

For Venezuela, Ecuador, Peru and Israel

JN1 A D G D22 3 X XXXXXX

Vehicle serial number

Manufacturing plant
X: Hiratsuka

Model year
3: 2003, 4: 2004 after June, '03 production

Model

G: Long wheelbase (2WD) U: Long wheelbase (4WD)

D: KA24DE engine N: ZD30DDT engine P: YD25DDTi engine

A: Single Cab C: Double Cab

JN1: Japan produced vehicle

Identification Number (Cont'd)

For Europe

JN1 B P U D22 U O XXXXXX

- XXXXXX: Vehicle serial number
- O: O: Stopgap (no meaning)
- U: U: For Europe
- D22: Model
- U: G: Long wheelbase (2WD) U: Long wheelbase (4WD)
- P: D: KA24DE engine P: YD25DDTi engine
- B: A: Single Cab B: King Cab C: Double Cab
- JN1: JN1: Japan produced vehicle

Except for the Middle East, Europe, Australia, New Zealand, Venezuela, Ecuador, Peru and Israel

JN1 A H G D22 Z 0 XXXXXX

- XXXXXX: Vehicle serial number
- 0: 0: Stopgap (no meaning)
- Z: Z: Except for the Middle East, Europe, Australia, New Zealand, Venezuela, Ecuador, Peru and Israel
- D22: Model
- G: G: Long wheelbase (2WD)
  U: U: Long wheelbase (4WD)
- H: D: KA24DE engine H: TD27 engine J: QD32 engine N: ZD30DDT engine
  P: P: YD25DDTi engine
- A: A: Single Cab C: Double Cab
- JN1: JN1: Japan produced vehicle

ENGINE SERIAL NUMBER

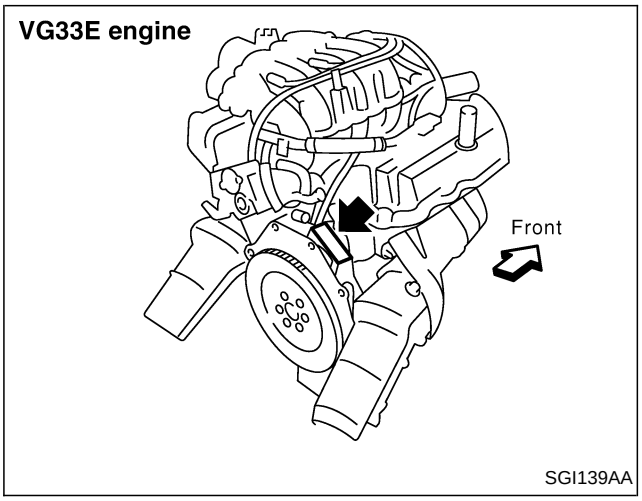

Dimensions

Destination			Australia and New Zealand				
	Vehicle type		2-wheel drive model		4-wheel drive model		
	Wheelbase		Long		Long		
Item	Cab or bed type		Single cab	Double cab	Single cab	King cab	Double cab
Overall length*1		mm (in)	5,010 (197.2) 4,795 (188.8)*3	4,920 (193.7) 5,080 (200.0)*1	5,010 (197.2) 4,795 (188.8)*3	5,035 (198.2)	4,945 (194.7) 5,080 (200.0)*1
Overall width		mm (in)	1,690 (66.5)	1,690 (66.5)	1,825 (71.9)	1,825 (71.9)	1,825 (71.9)
Overall height		mm (in)	1,610 (63.4) 1,620 (63.8)*2	1,625 (64.0) 1,635 (64.4)*2	1,700 (66.9) 1,705 (67.1)*4	1,700 (66.9)	1,710 (67.3) 1,715 (67.5)*4
Wheelbase		mm (in)	2,950 (116.1)	2,950 (116.1)	2,950 (116.1)	2,950 (116.1)	2,950 (116.1)
Tread	Front	mm (in)	1,395 (54.9)	1,395 (54.9)	1,525 (60.0)	1,525 (60.0)	1,525 (60.0)
	Rear	mm (in)	1,390 (54.7)	1,390 (54.7)	1,505 (59.3)	1,505 (59.3)	1,505 (59.3)
Ground clearance		mm (in)	155 (6.1) 175 (6.9)*2	160 (6.3) 180 (7.1)*2	220 (8.7)	215 (8.5)	220 (8.7)

*1: On step bumper equipped models
*2: VG30E engine models
*3: Cab and chassis model
*4: 255/70R16 tire equipped model

Destination			Europe					
Vehicle type			2-wheel drive model			4-wheel drive model		
Wheelbase			Long			Long		
Cab or bed type			Single cab	King cab	Double cab	Single cab	King cab	Double cab
Overall length*1		mm (in)	5,020 (197.6) 5,180 (203.9)*1	5,045 (198.6) 5,180 (203.9)*1	4,955 (195.1) 5,090 (200.4)*1	5,020 (197.6) 5,180 (203.9)*1	5,045 (198.6) 5,180 (203.9)*1	4,955 (195.1) 5,090 (200.4)*1
Overall width		mm (in)	1,690 (66.5)	1,690 (66.5) 1,825 (71.9)*2	1,690 (66.5) 1,825 (71.9)*2	1,825 (71.9)	1,825 (71.9)	1,825 (71.9)
Overall height		mm (in)	1,610 (63.4) 1,620 (63.8)*4	1,610 (63.4) 1,620 (63.8)*4 1,700 (66.9)*2	1,620 (63.8) 1,630 (64.2)*4 1,710 (67.3)*2 1,810 (71.3)*2, *6	1,700 (66.9)	1,700 (66.9) 1,705 (67.1)*3 1,695 (66.7)*5	1,715 (67.5) 1,815 (71.5)*6 1,720 (67.7)*3 1,820 (71.7)*6, *3 1,710 (67.3)*5 1,810 (71.3)*6, *5
Wheelbase		mm (in)	2,950 (116.1)	2,950 (116.1)	2,950 (116.1)	2,950 (116.1)	2,950 (116.1)	2,950 (116.1)
Tread	Front	mm (in)	1,395 (54.9)	1,395 (54.9) 1,525 (60.0)*2	1,395 (54.9) 1,525 (60.0)*2	1,525 (60.0)	1,525 (60.0)	1,525 (60.0)
	Rear	mm (in)	1,390 (54.7)	1,390 (54.7) 1,505 (59.3)*2	1,390 (54.7) 1,505 (59.3)*2	1,505 (59.3)	1,505 (59.3)	1,505 (59.3)
Ground clearance		mm (in)	180 (7.1) 190 (7.5)*4	180 (7.1) 190 (7.5)*4 240 (9.4)*2	180 (7.1) 190 (7.5)*4 240 (9.4)*2	230 (9.4)	230 (9.4) 240 (9.4)*3 225 (8.9)*5	230 (9.1) 240 (9.4)*3 225 (8.9)*5

*1: On step bumper equipped models
*2: 4WD appearance models
*3: With optional 255/70R16 tires
*4: With optional 195R15C tires
*5: With optional 255/60R17 tires
*6: Roof rail equipped models