Go to SUP6 1st Rev.Vol2

ELECTRICAL SYSTEM

SECTION EL

MODIFICATION NOTICE:

- Wiring diagrams have been changed.
- Harness layouts have been changed.
- Fog lamp system has been changed.
- CD auto-changer has been added.

CONTENTS

PRECAUTIONS 3
Supplemental Restraint System (SRS) "AIR BAG" and "SEAT BELT PRE-TENSIONER" 3
POWER SUPPLY ROUTING 4
Schematic 4
Wiring Diagram - POWER - 5
STARTING SYSTEM 12
Wiring Diagram - START -/LHD A/T Models for Diesel Engine 12
CHARGING SYSTEM 13
Wiring Diagram - CHARGE -/A/T Models for Diesel Engine 13
COMBINATION SWITCH 14
Check 14
HEADLAMP - Headlamp Aiming Control - 16
Wiring Diagram - H/AIM - 16
PARKING, LICENSE AND TAIL LAMPS 18
Wiring Diagram - TAIL/L -/LHD Models for Europe 18
BACK-UP LAMP 20
Wiring Diagram - BACK/L -/M/T Models for VG Engine 20
Wiring Diagram - BACK/L -/A/T Models for QD Engine 21
FRONT FOG LAMP 22
Wiring Diagram - F/FOG -/LHD Models for Europe 22
Wiring Diagram - F/FOG -/RHD Models for Europe 23
Wiring Diagram - F/FOG -/Except for Europe 24
REAR FOG LAMP 25
Wiring Diagram - R/FOG -/LHD Models without Front Fog Lamp 25
Wiring Diagram - R/FOG -/RHD Models without Front Fog Lamp 26
Wiring Diagram - R/FOG -/LHD Models with Front Fog Lamp 27
Wiring Diagram - R/FOG -/RHD Models with Front Fog Lamp 29
INTERIOR ROOM LAMP 30
Wiring Diagram - ROOM/L - 30
ILLUMINATION 31
Wiring Diagram - ILL -/LHD Models 31
Wiring Diagram - ILL -/RHD Models 33
METER AND GAUGES 35
Combination Meter/With Tachometer 35
Combination Meter/Without Tachometer 36
Schematic/With Tachometer 37
Schematic/Without Tachometer 38
Wiring Diagram - METER -/Gasoline Engine with Tachometer 39
Wiring Diagram - METER -/LHD Diesel Engine Models with Tachometer 41
Wiring Diagram - METER -/Diesel Engine without Tachometer 43
WARNING LAMPS 44
Schematic/With Tachometer 44
Schematic/Without Tachometer 45
Wiring Diagram - WARN -/Gasoline Engine with Tachometer 46
Wiring Diagram - WARN -/Gasoline Engine without Tachometer 50
Wiring Diagram - WARN -/Diesel Engine with Tachometer 54
Wiring Diagram - WARN -/Diesel Engine without Tachometer 58
WARNING CHIME 64
Wiring Diagram - CHIME -/LHD Models for Europe 64
AUDIO 65
Wiring Diagram - AUDIO -/LHD Models Except for Europe 65
Wiring Diagram - AUDIO -/LHD Models for Europe 66

CONTENTS (Cont'd)

Wiring Diagram - AUDIO -/RHD Models for Europe 68
NATS (Nissan Anti-Theft System).....70
Wiring Diagram - NATS -/LHD Models.....70
Wiring Diagram - NATS -/RHD Models.....71
HARNESS LAYOUT 72
Main Harness.....72
Engine Room Harness 80
Engine Control Harness 86
Engine Harness 89
Alternator Harness.....91
Instrument Harness 92
Chassis Harness and Tail Harness 93
Room Lamp Harness/LHD Models.....94
Room Lamp Harness/RHD Models.....95
WIRING DIAGRAM CODES (CELL CODES).....96
SUPER MULTIPLE JUNCTION (SMJ).....Foldout
Terminal Arrangement.....Foldout
FUSE AND FUSIBLE LINK.....Foldout
Terminal Arrangement.....Foldout
CONTROL UNITS.....Foldout
Terminal Arrangement.....Foldout

Supplemental Restraint System (SRS) “AIR BAG” and “SEAT BELT PRE-TENSIONER”

The Supplemental Restraint System such as “AIR BAG” and “SEAT BELT PRE-TENSIONER” used along with a seat belt, helps to reduce the risk or severity of injury to the driver and front passenger in a frontal collision. The SRS composition which is available to NISSAN MODEL D22 is as follows (The composition varies according to the destination and optional equipment.):
Driver air bag module (located in the center of the steering wheel), front passenger air bag module (located on the instrument panel on passenger side), seat belt pre-tensioner, a diagnosis sensor unit, warning lamp, wiring harness and spiral cable.

WARNING:

- **To avoid rendering the SRS inoperative, which could increase the risk of personal injury or death in the event of a collision which would result in air bag inflation, all maintenance must be performed by an authorized NISSAN dealer.**
- **Improper maintenance, including incorrect removal and installation of the SRS, can lead to personal injury caused by unintentional activation of the system.**
- **Do not use electrical test equipment on any circuit related to the SRS unless instructed to in this Service Manual. SRS wiring harnesses can be identified by yellow harness connector.**

Schematic

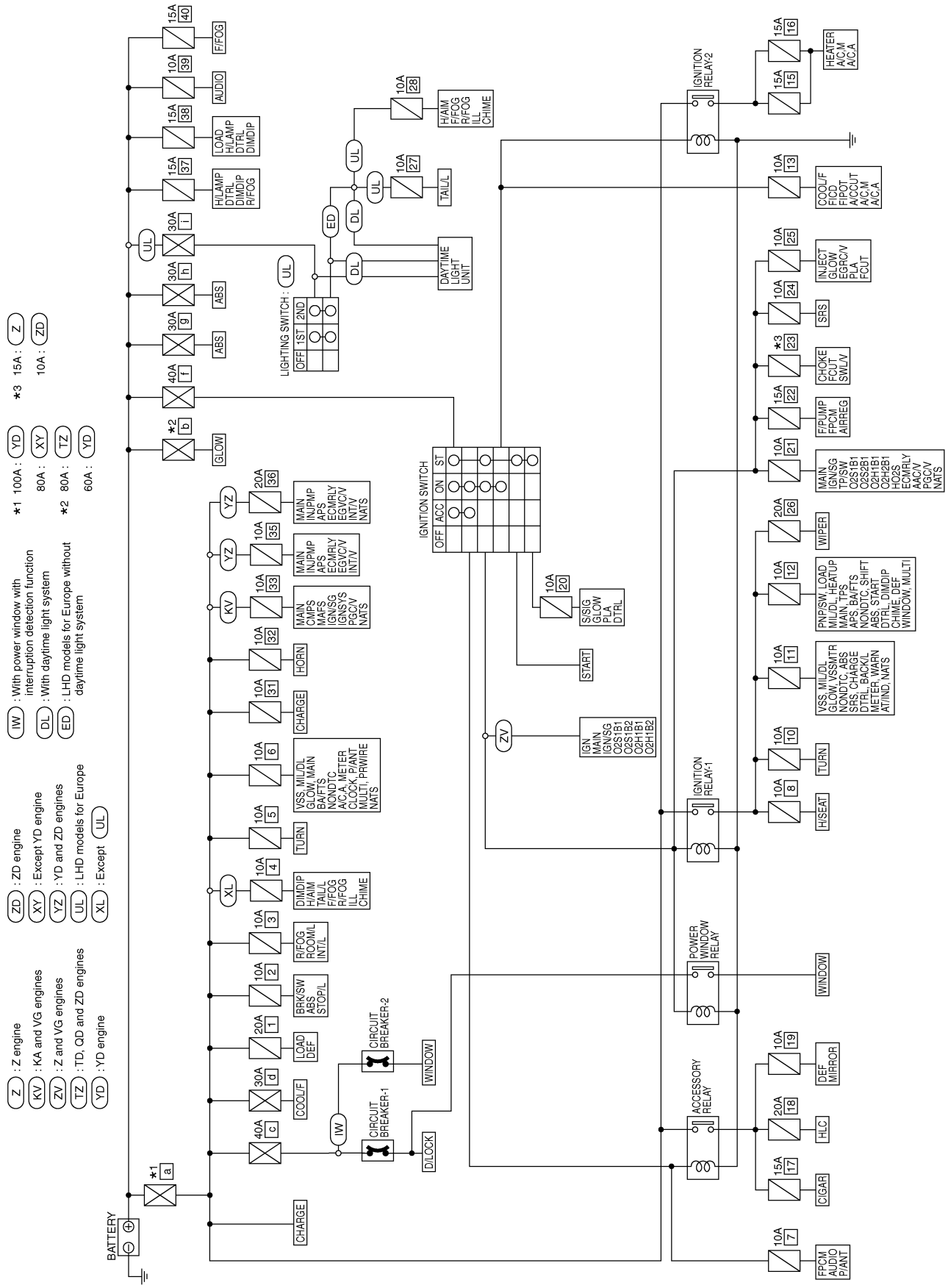

GEL847A

Wiring Diagram — POWER —

BATTERY POWER SUPPLY — IGNITION SWITCH IN ANY POSITION

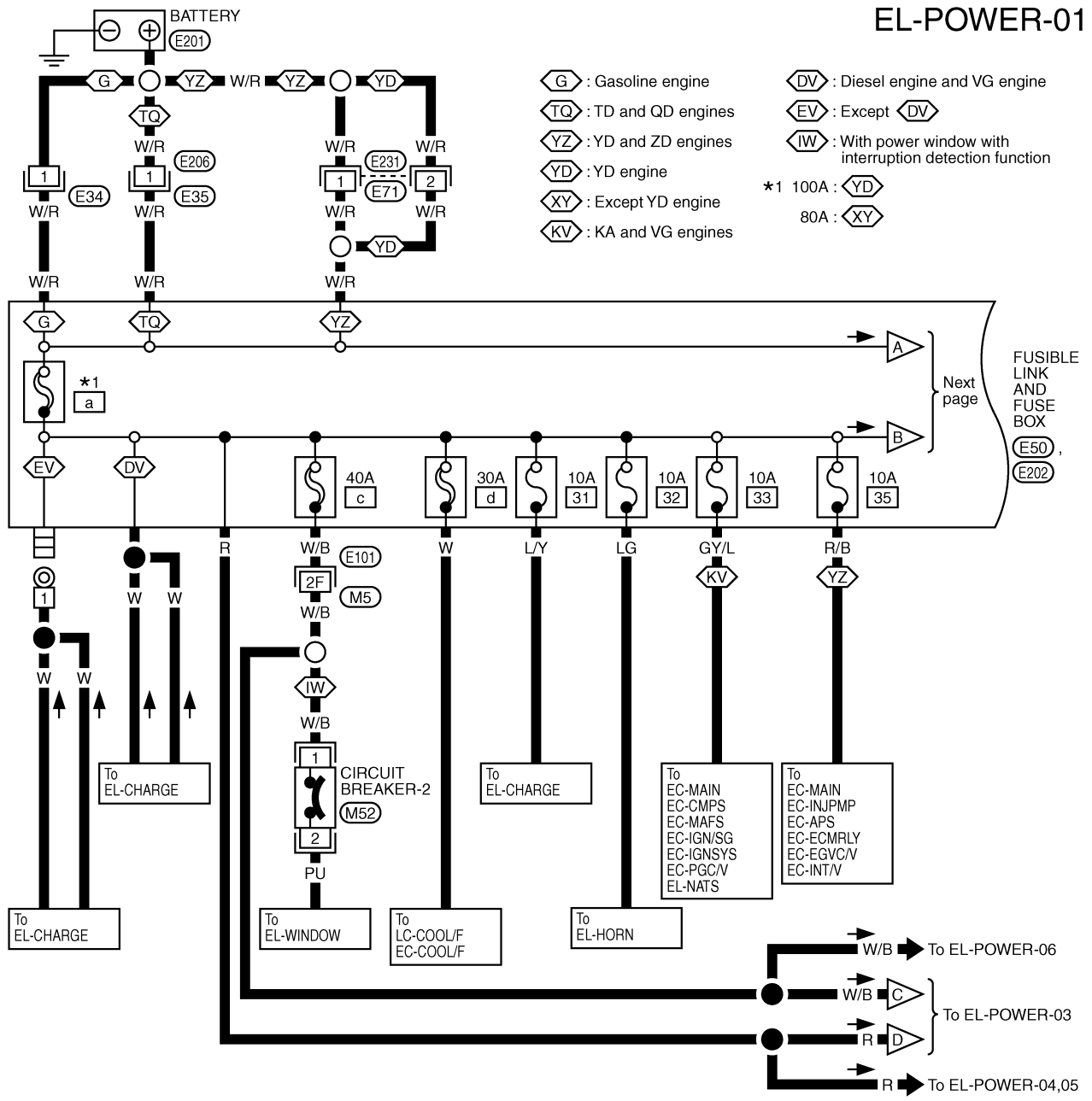

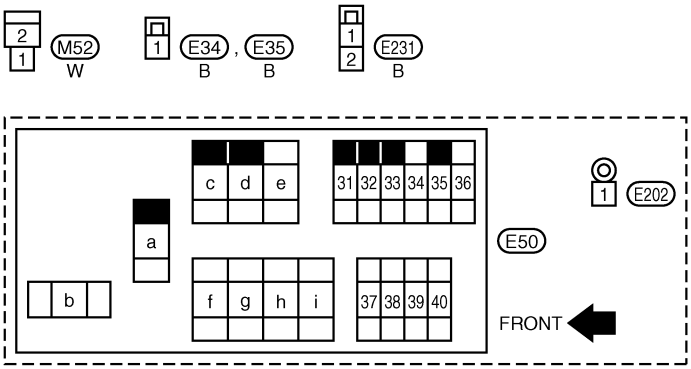

Refer to last page (Foldout page).
M5 , E101

GEL359A

Wiring Diagram — POWER — (Cont'd)

EL-POWER-02

YZ : YD and ZD engines
UL : LHD models for Europe
YD : YD engine
TZ : TD, QD and ZD engines
*1 80A : TZ
60A : YD

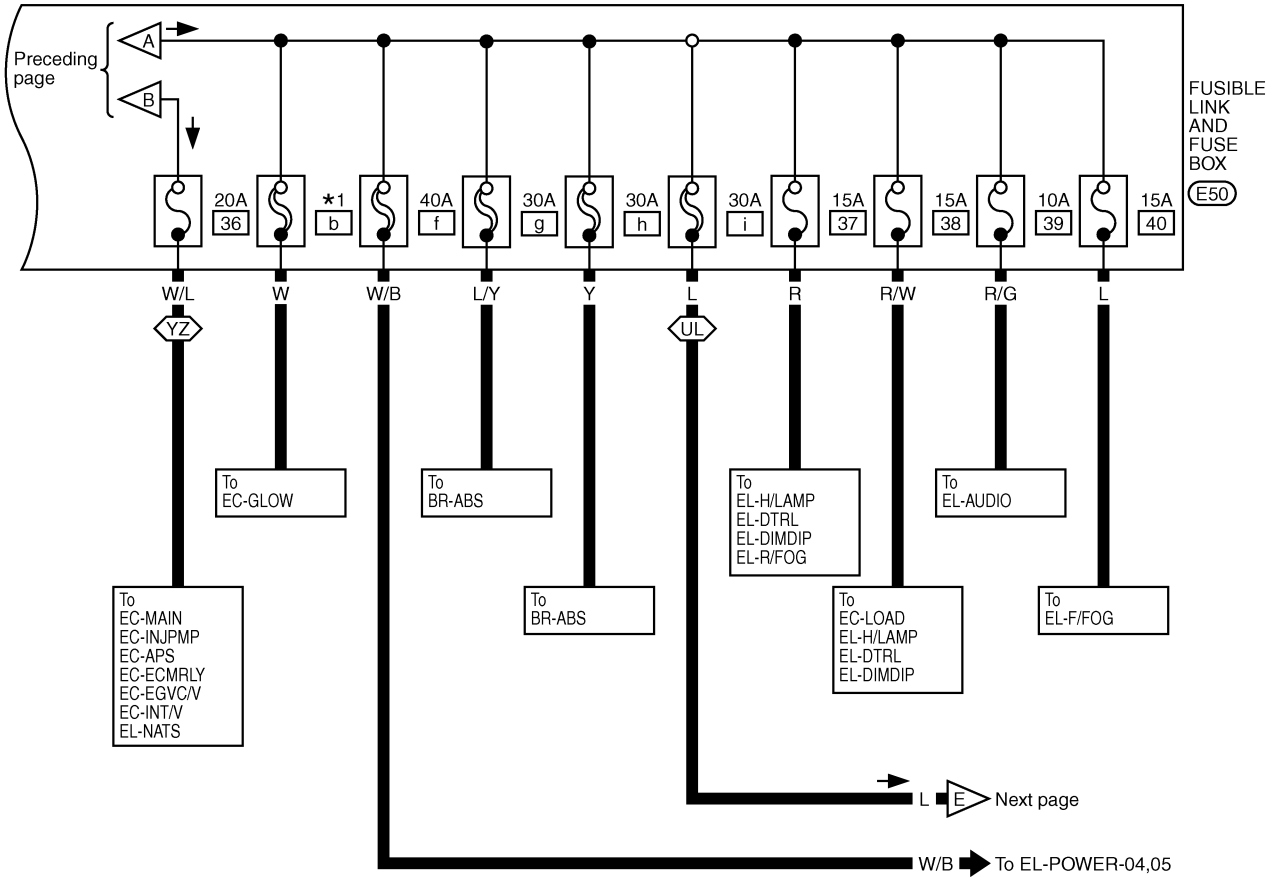

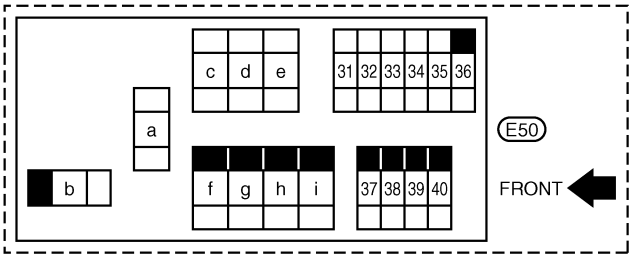

GEL662A

Wiring Diagram — POWER — (Cont'd)

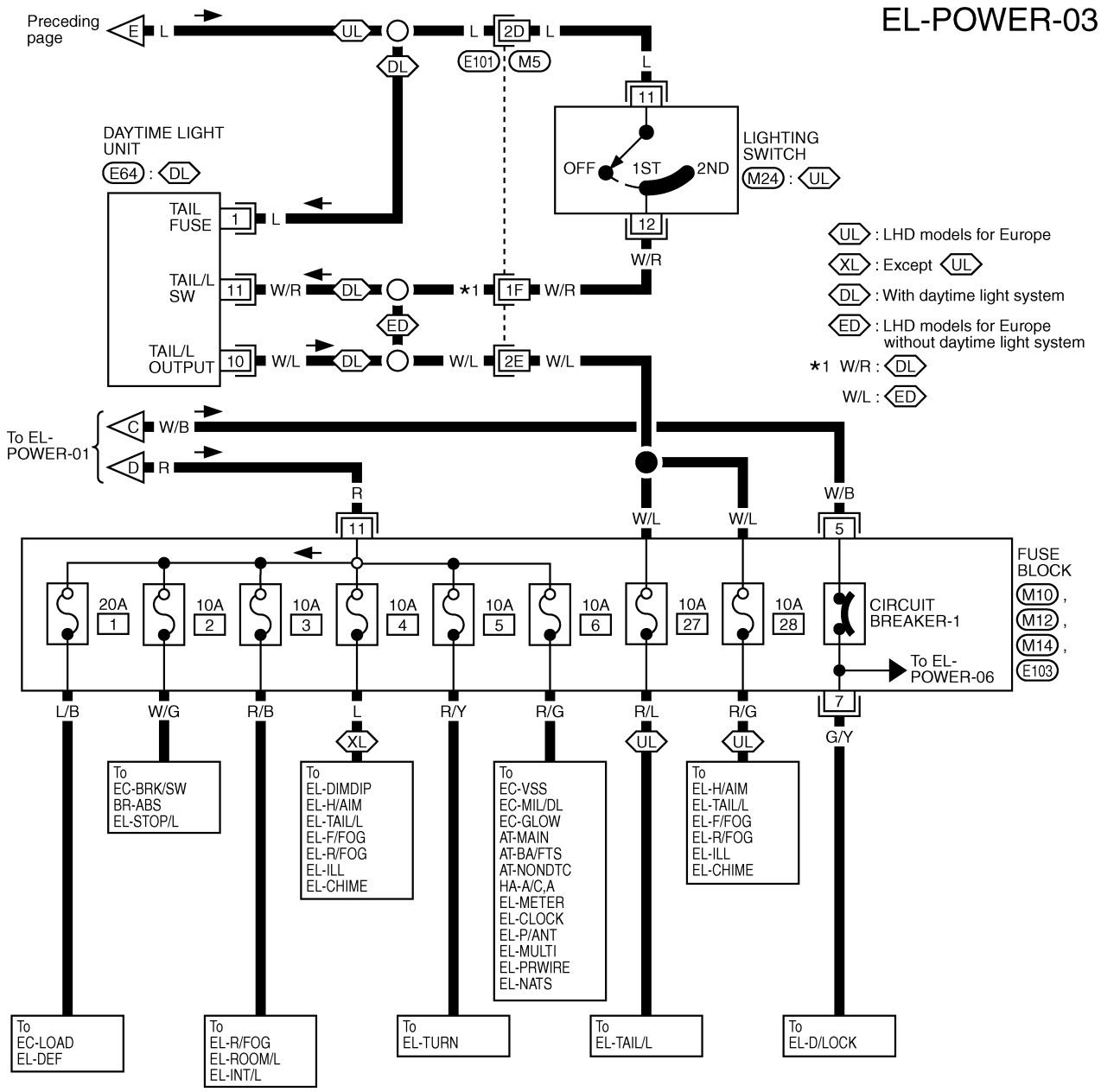

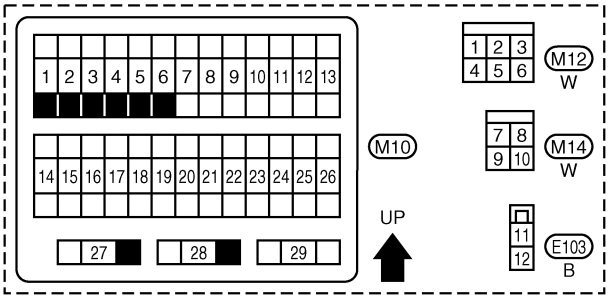

Refer to last page (Foldout page).
M5 , E101

GEL663A

Wiring Diagram — POWER — (Cont'd)

ACCESSORY POWER SUPPLY — IGNITION SW. IN "ACC" OR "ON"

EL-POWER-04

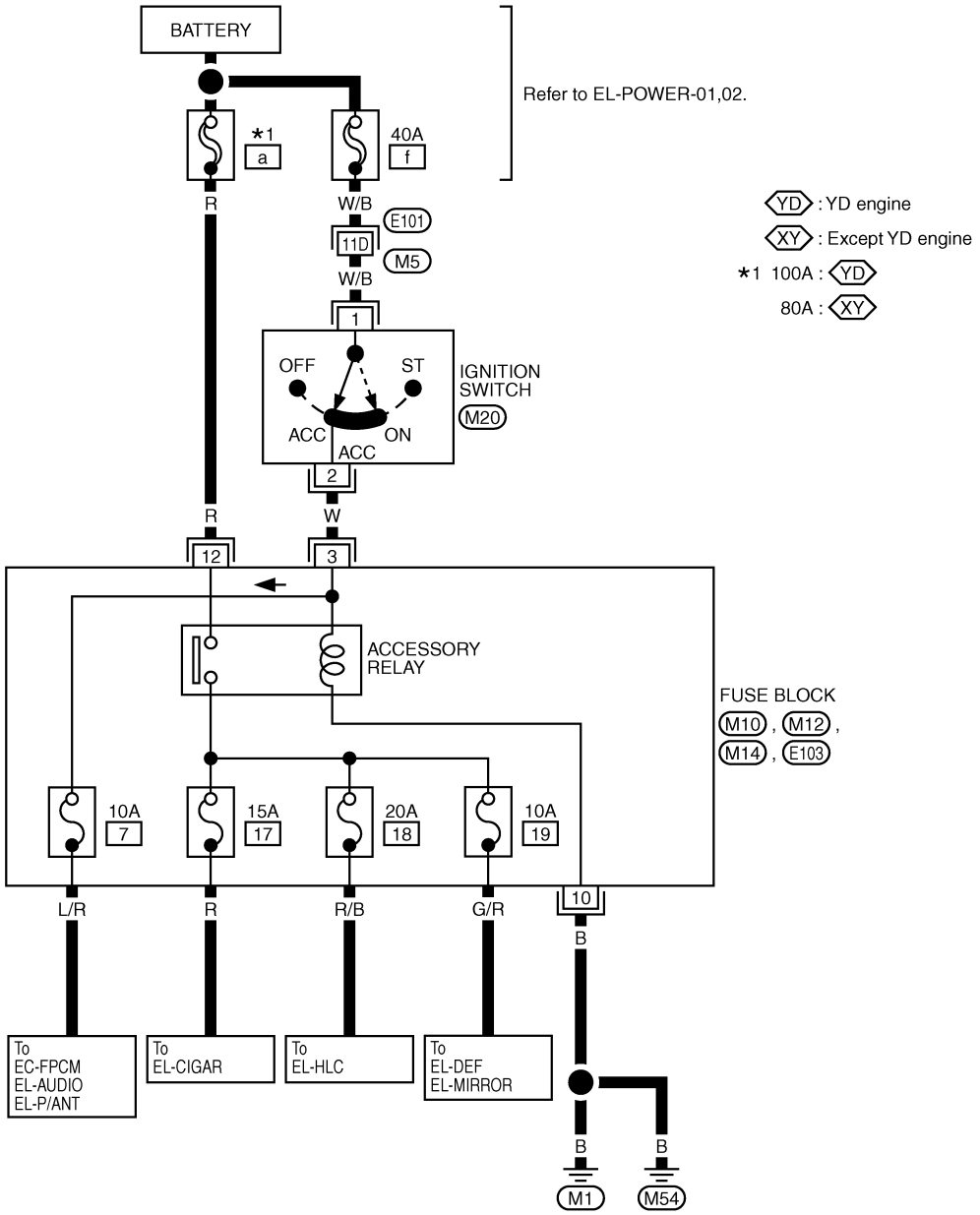

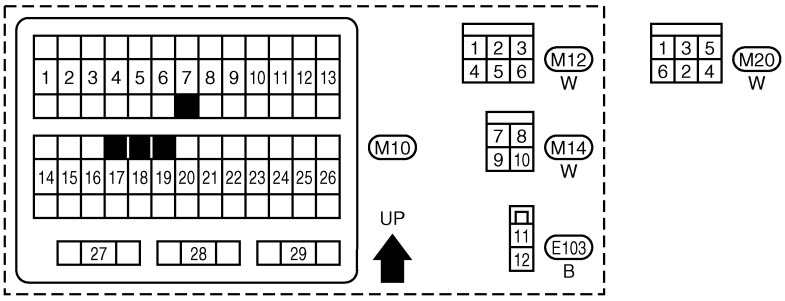

Refer to last page (Foldout page).
M5 , E101

GEL362A

Wiring Diagram — POWER — (Cont'd)

IGNITION POWER SUPPLY — IGNITION SW. IN "ON" AND/OR "START"

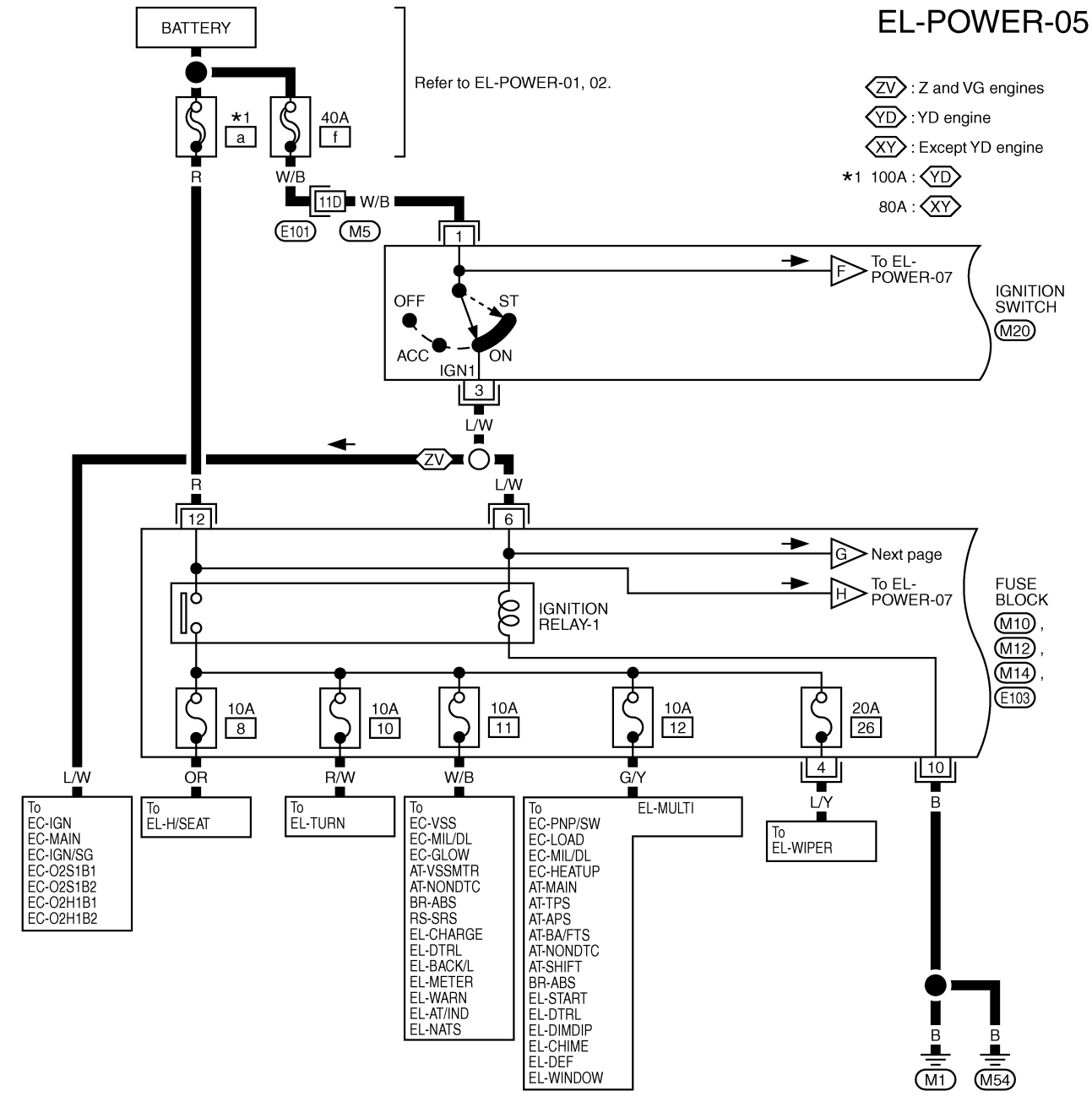

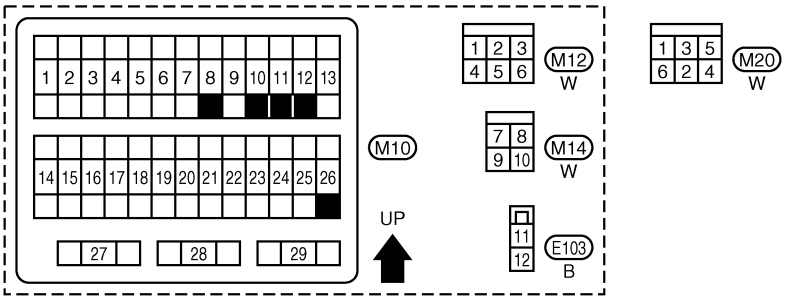

Refer to last page (Foldout page).
M5 , E101

GEL848A

Wiring Diagram — POWER — (Cont'd)

EL-POWER-06

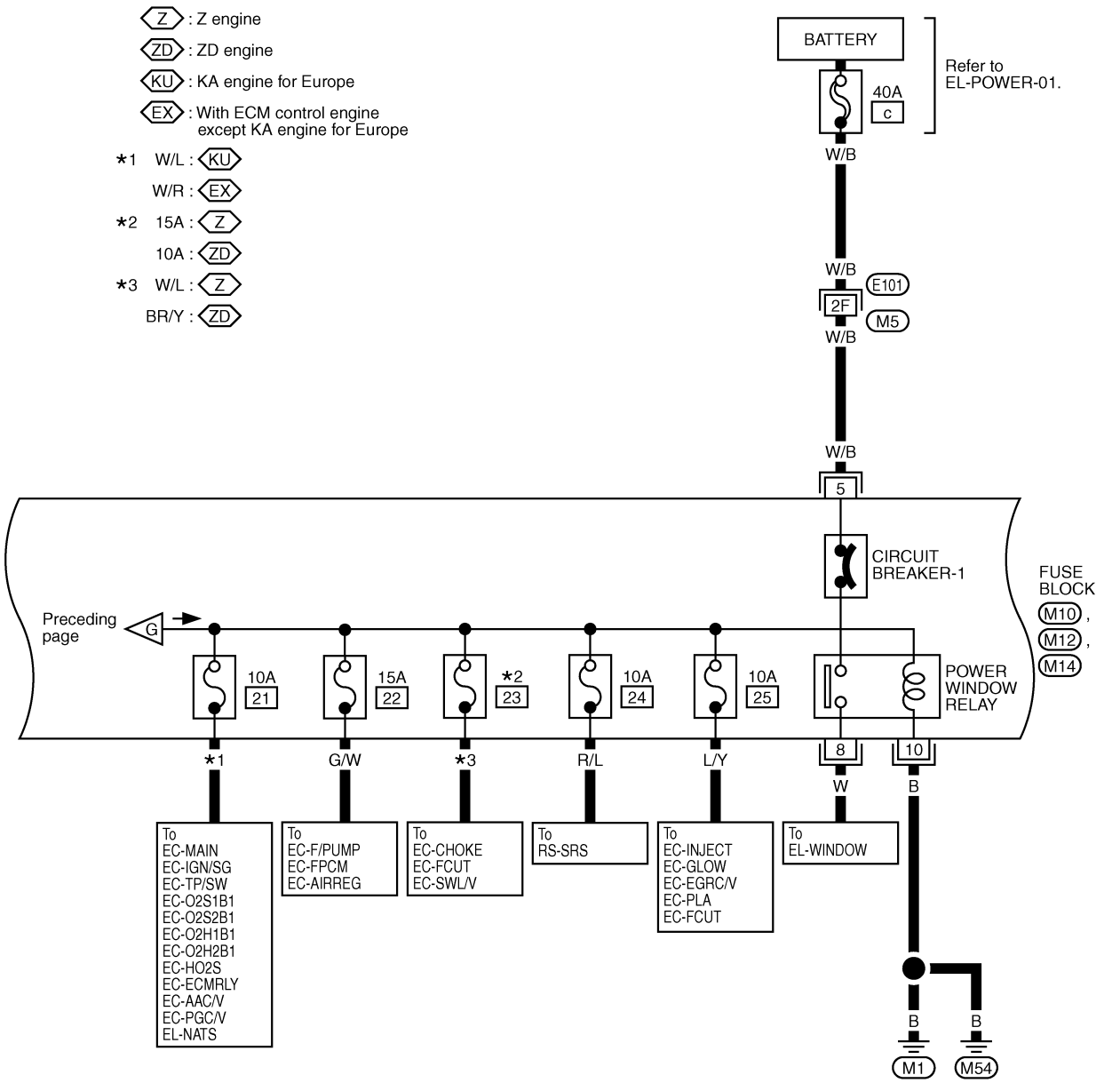

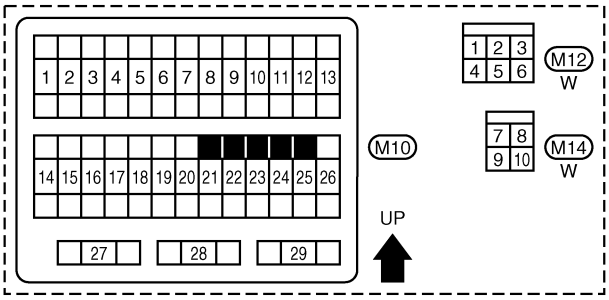

Refer to last page (Foldout page).
M5 , E101

GEL601A

Wiring Diagram — POWER — (Cont'd)

EL-POWER-07

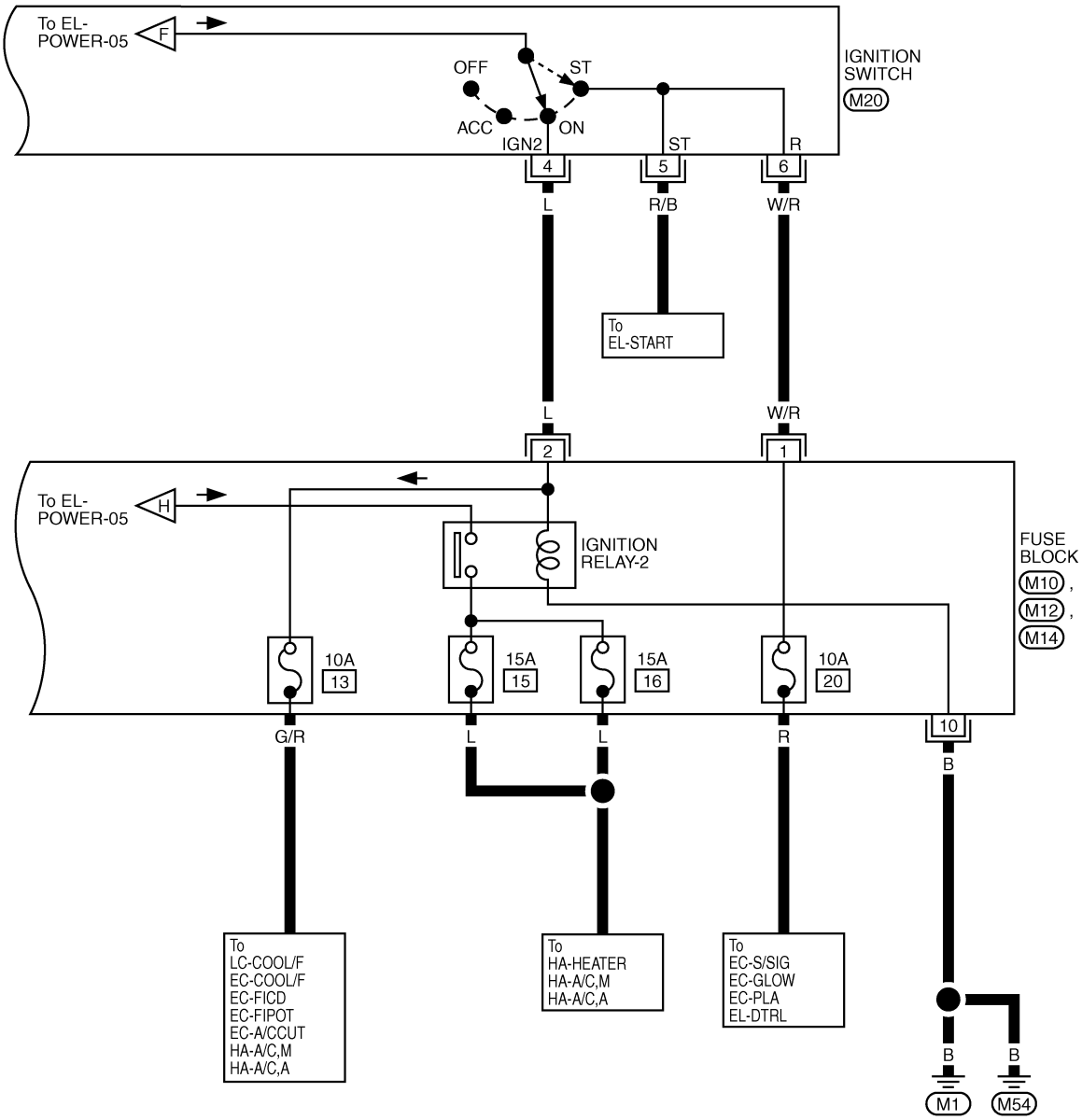

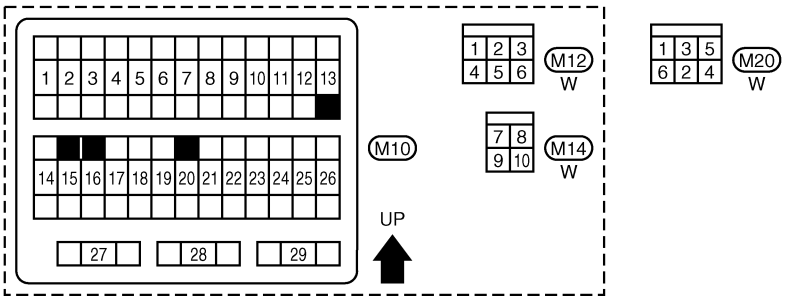

GEL365A

Wiring Diagram — START —/LHD A/T Models for Diesel Engine

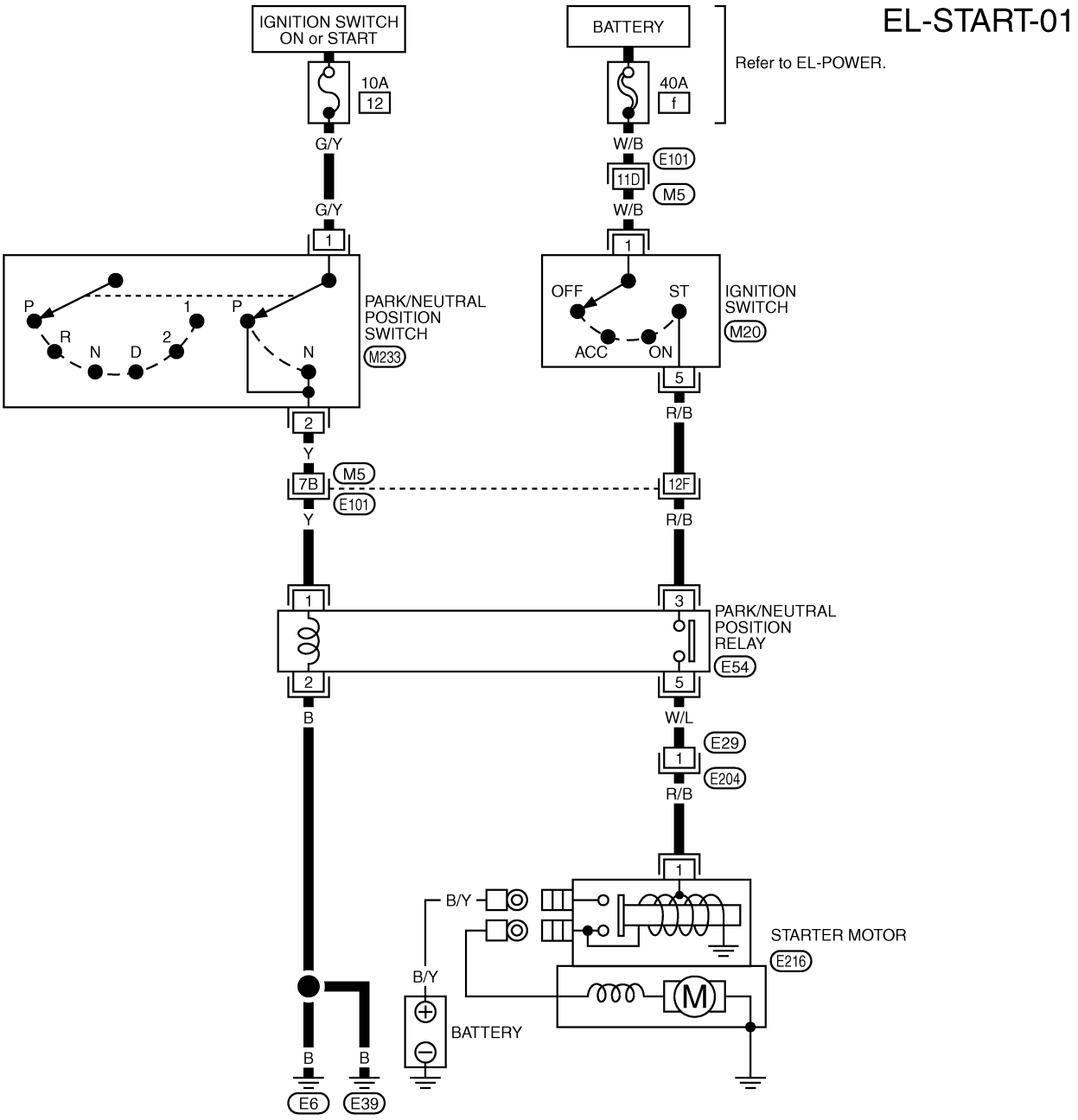

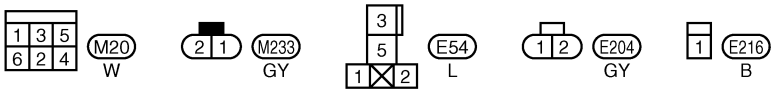

Refer to last page (foldout page).
M5 , E101

GEL813A

Wiring Diagram — CHARGE —/A/T Models for Diesel Engine

EL-CHARGE-01

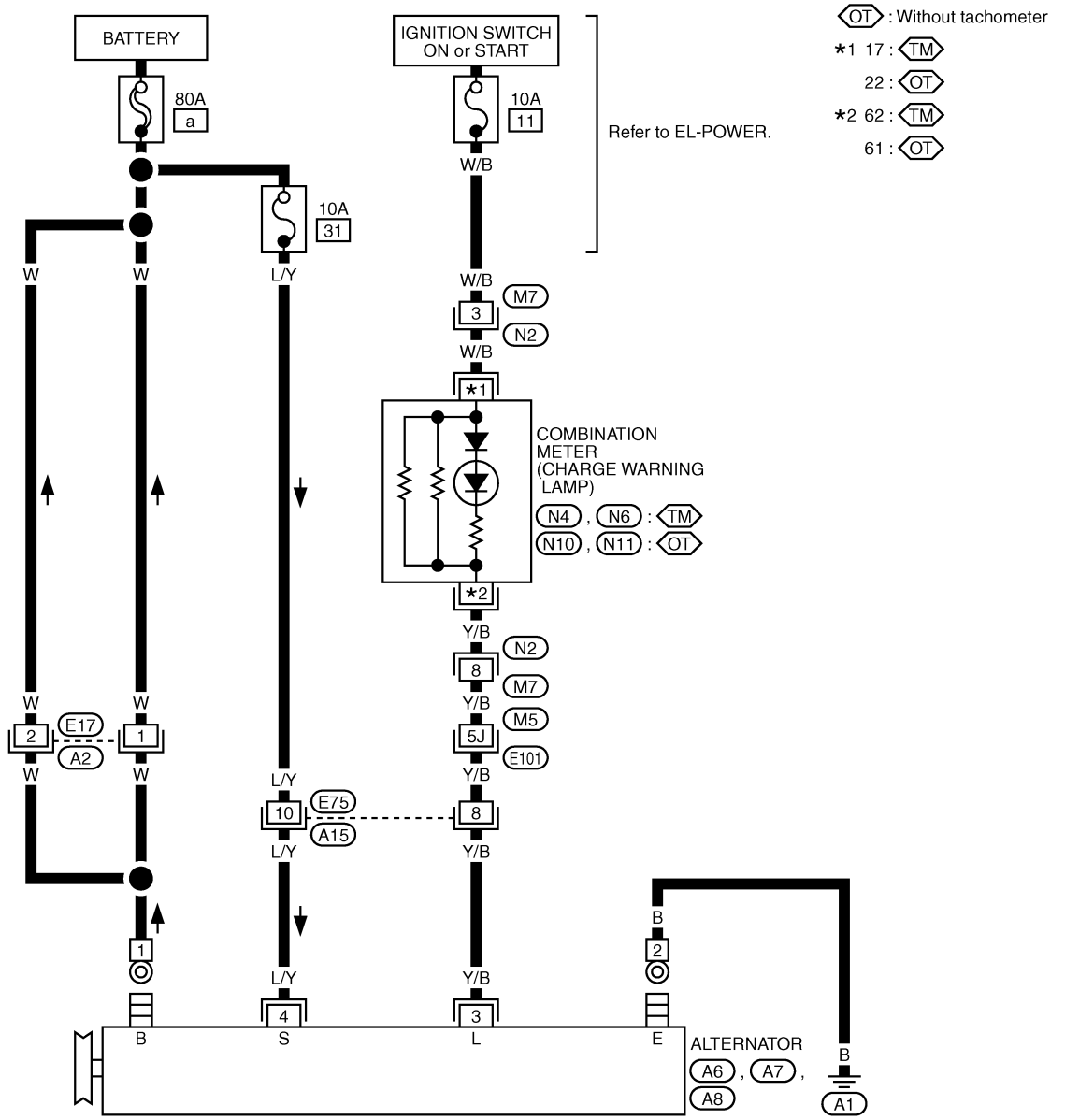

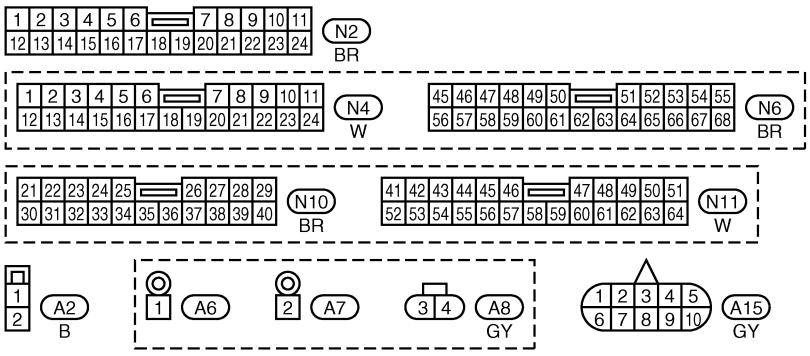

Refer to last page (Foldout page).
M5 , E101

GEL814A

Check

FOR EUROPE AND LHD MODELS

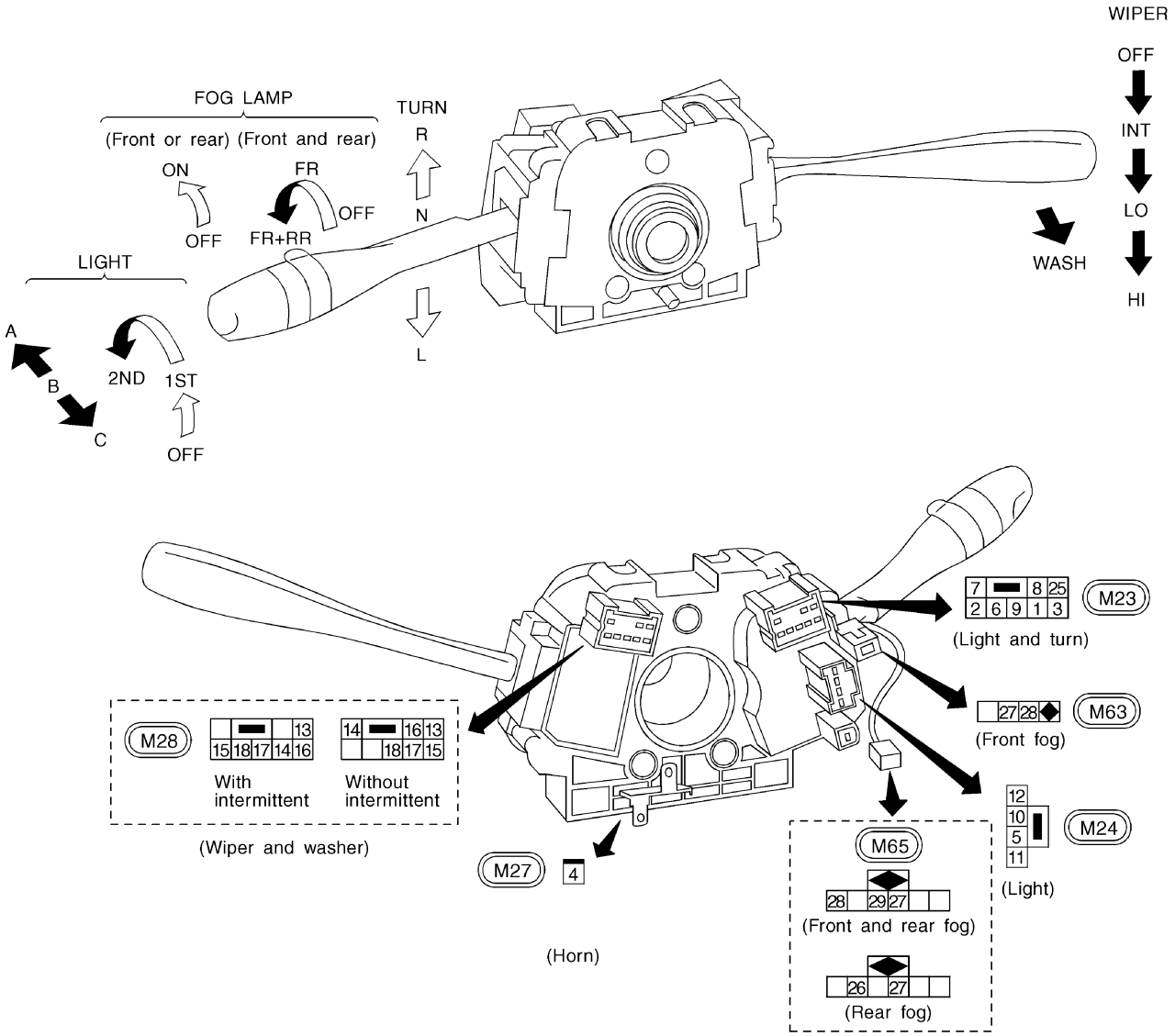

LIGHTING SWITCH

	OFF			1ST			2ND		
	A	B	C	A	B	C	A	B	C
5			○			○	○	○	○
6			○			○	○		○
7								○	
8			○			○	○	○	○
9			○			○	○		○
10								○	
11				○	○	○	○	○	○
12				○	○	○	○	○	○
25							○	○	○

WIPER AND WASHER SWITCH (With intermittent)

	OFF	INT	LO	HI	WASH
13					○
14	○	○	○		
	○	○			
		○			
15					○
16				○	
17		○	○	○	○
18					○

WIPER AMPLIFIRE (In combination switch)

WIPER AND WASHER SWITCH (Without intermittent)

	OFF	LO	HI	WASH
13	○			
14	○	○		
15				
16			○	
17		○	○	○
18				○

TURN SIGNAL LAMP SWITCH

	L	N	R
1	○		○
2			○
3	○		

FRONT FOG LAMP SWITCH

	OFF	ON
28		○
27		○

REAR FOG LAMP SWITCH

	OFF	ON
26		○
27		○

FOG LAMP SWITCH (Front and rear)

	OFF	FR	FR+RR
28		○	○
29		○	○
27			○

HORN SWITCH (Without air bag)

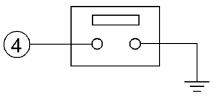

HEL022C

Check (Cont'd)

RHD MODELS EXCEPT FOR EUROPE

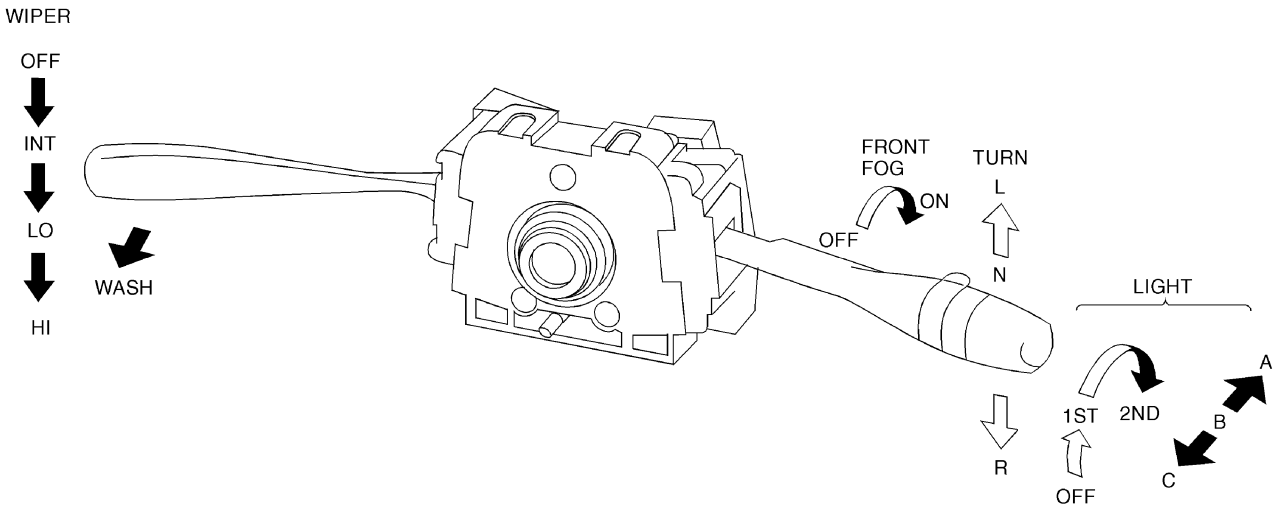

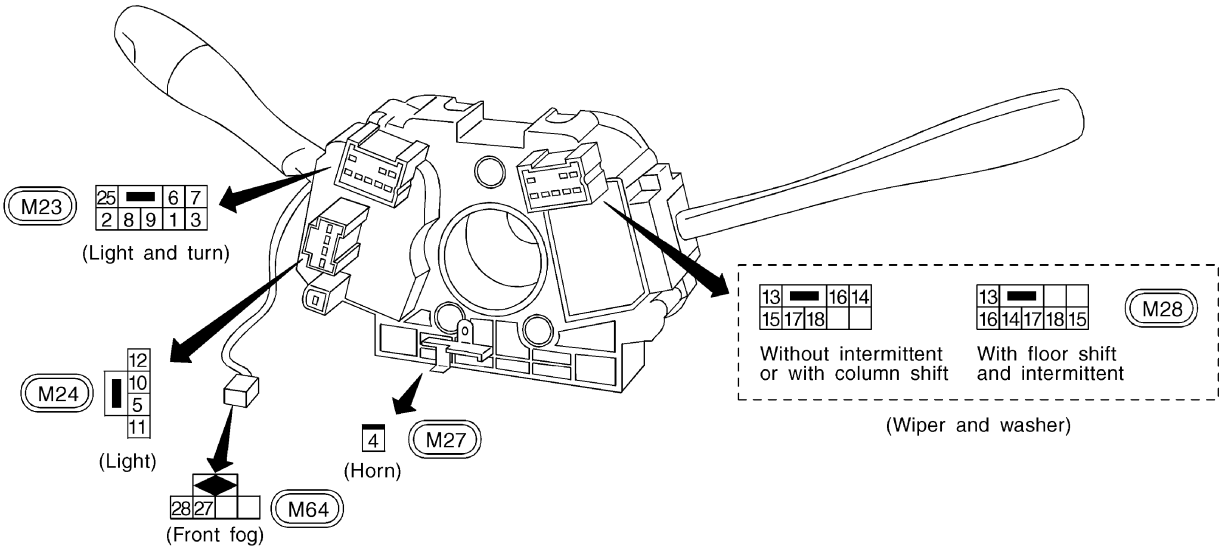

LIGHTING SWITCH

	OFF			1ST			2ND		
	A	B	C	A	B	C	A	B	C
5			○			○	○		○
6			○			○	○		○
7								○	
8			○			○	○		○
9			○			○	○		○
10								○	
11				○	○	○	○	○	○
12				○	○	○	○	○	○
25							○	○	○

WIPER AND WASHER SWITCH (With column shift and intermittent)

	OFF	INT	LO	HI	WASH
13	○	○			
14	○	○	○		
15		○			
16				○	
17		○	○	○	○
18					○

WIPER AND WASHER SWITCH (With floor shift and intermittent)

	OFF	INT	LO	HI	WASH
13					○
14	○	○	○		
╳	○	○			
╳		○			
15					○
16		○		○	
17		○	○	○	○
18					○

WIPER AMPLIFIRE (In combination switch)

WIPER AND WASHER SWITCH (Without intermittent)

	OFF	LO	HI	WASH
13	○			
14	○	○		
15				
16			○	
17		○	○	○
18				○

TURN SIGNAL LAMP SWITCH

	L	N	R
1	○		○
2			○
3	○		

FRONT FOG LAMP SWITCH

	OFF	ON
28		○
27		○

HORN SWITCH (Without air bag)

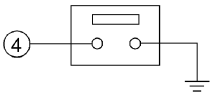

HEL023C

Wiring Diagram — H/AIM —

EL-H/AIM-01

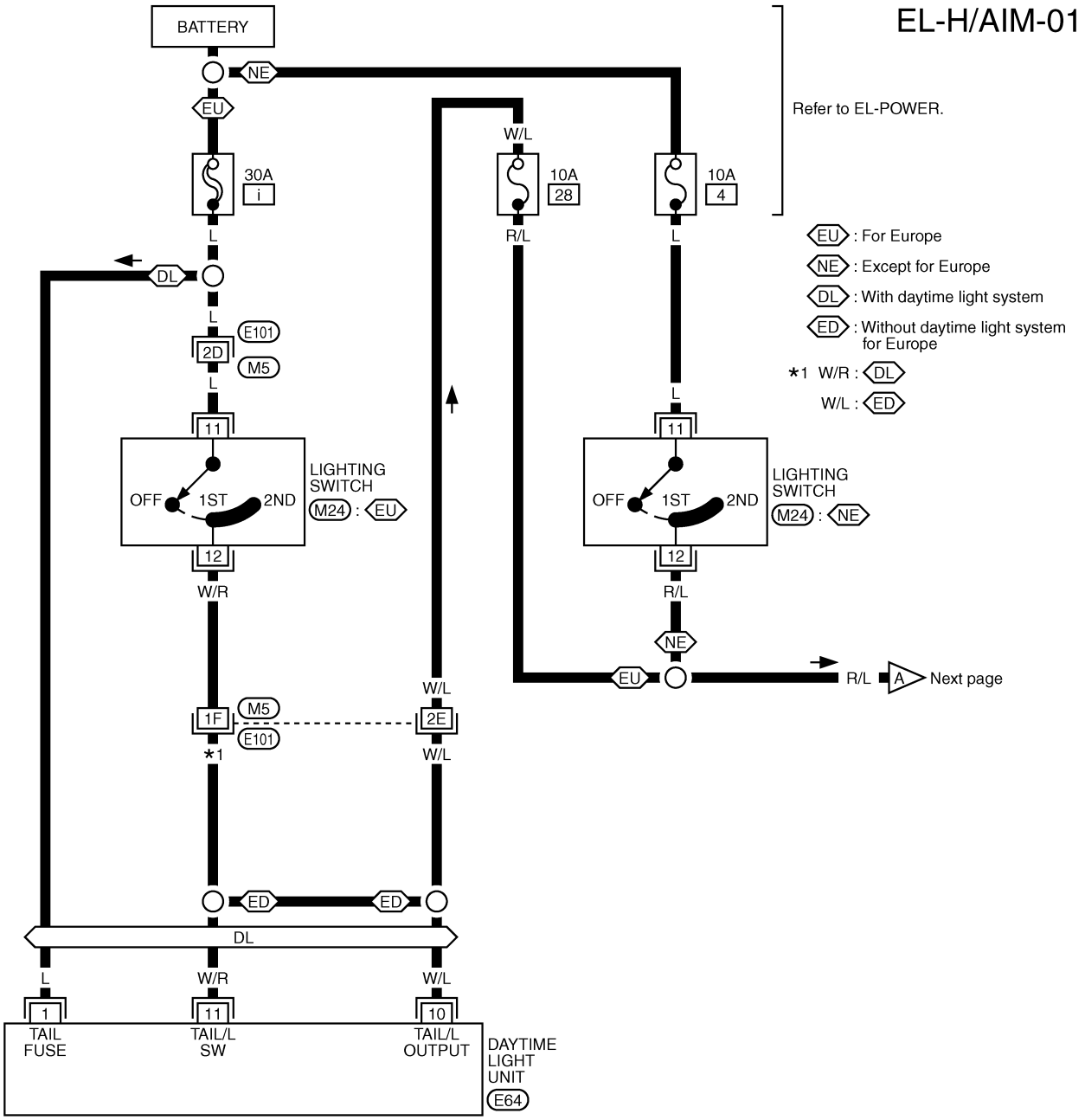

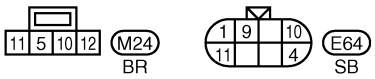

Refer to last page (Foldout page).
M5 , E101

GEL664A

Wiring Diagram — H/AIM — (Cont'd)

EL-H/AIM-02

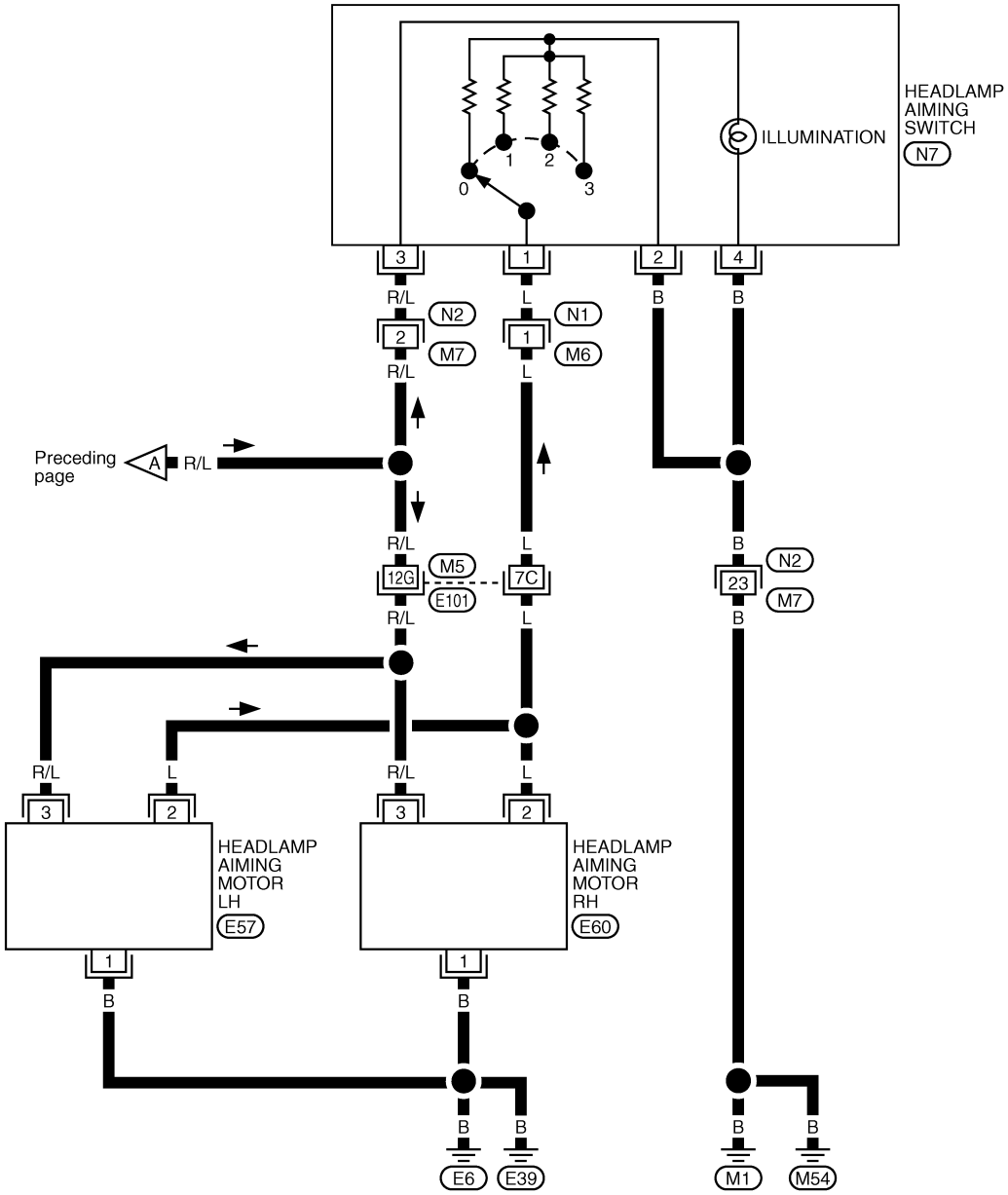

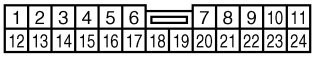

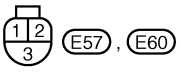

Refer to last page (Foldout page).

M5 , E101

GI MA EM LC EC FE CL MT AT TF PD FA RA BR ST RS BT HA EL IDX

GEL378A

Wiring Diagram — TAIL/L —/LHD Models for Europe

EL-TAIL/L-01

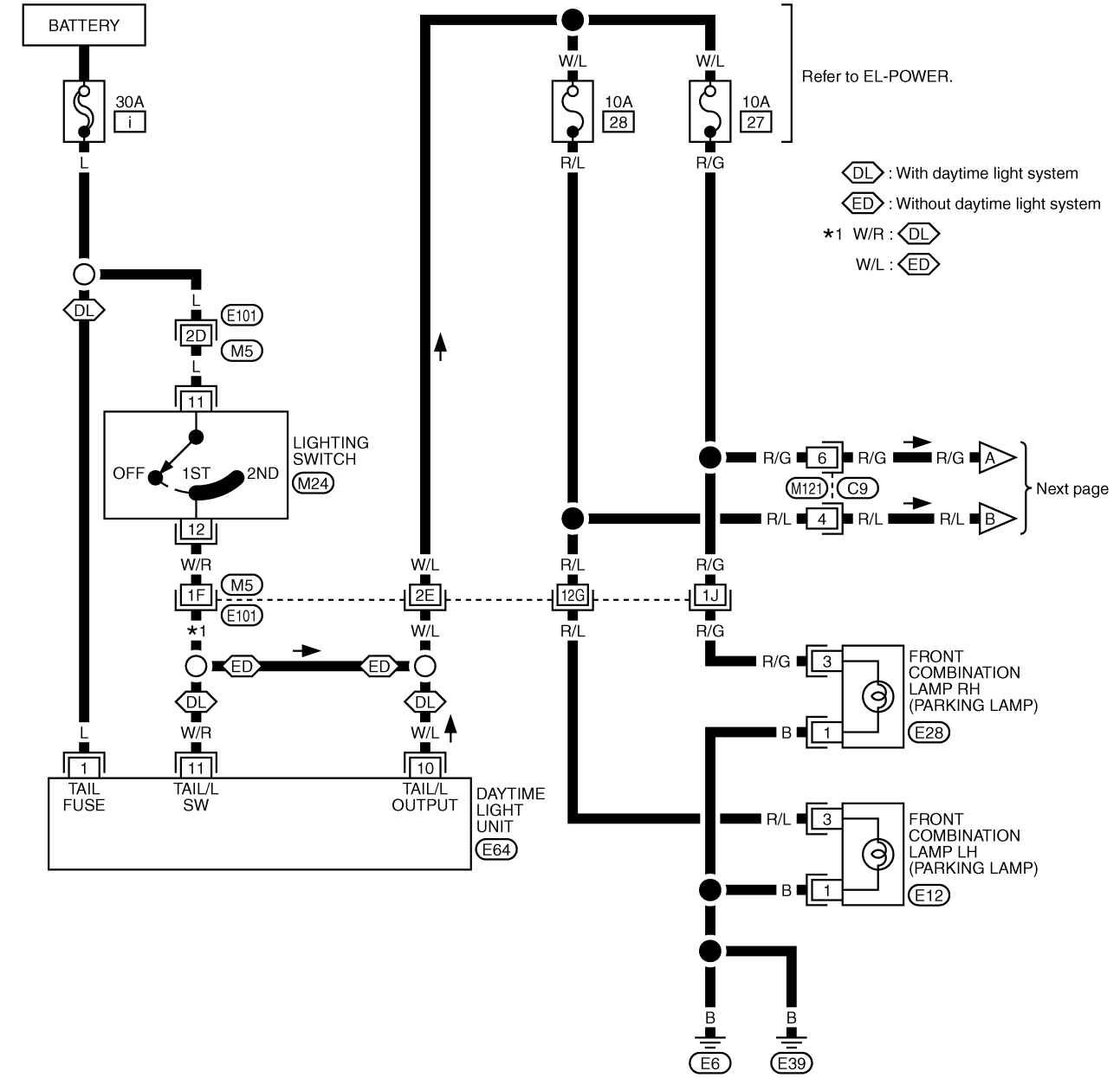

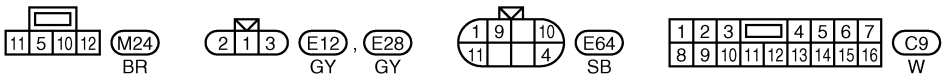

Refer to last page (Foldout page).
M5 , E101

GEL665A

Wiring Diagram — TAIL/L —/LHD Models for Europe (Cont'd)

EL-TAIL/L-02

CH : A-chassis models
XH : Except A-chassis models
SB : Models with step bumper
XB : Except SB
*1 4 : CH
5 : XH

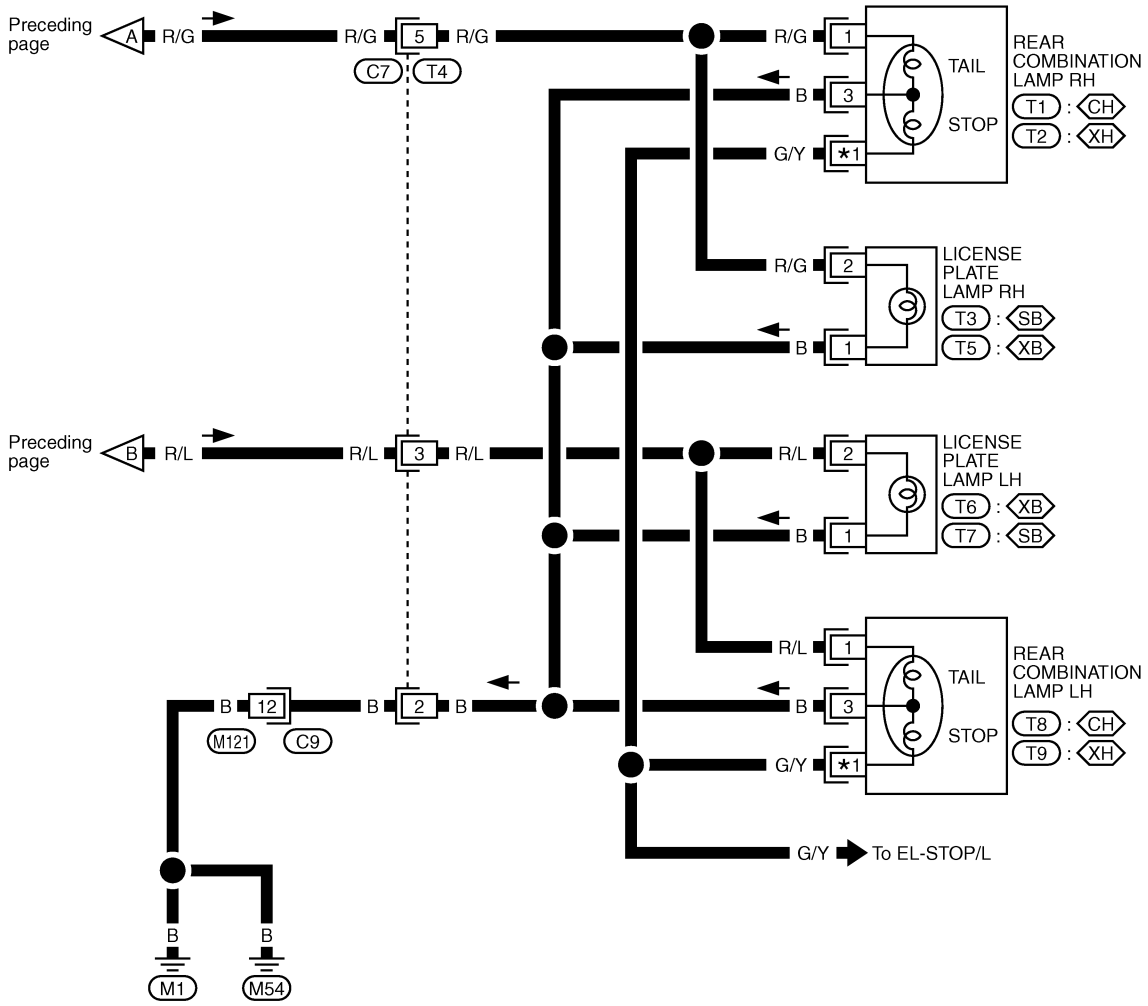

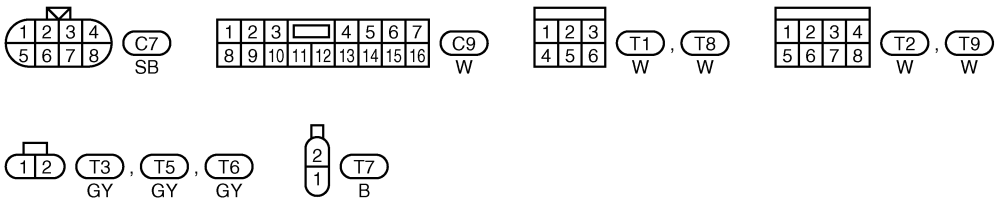

GEL666A

Wiring Diagram — BACK/L —/M/T Models for VG Engine

FOR VG ENGINE

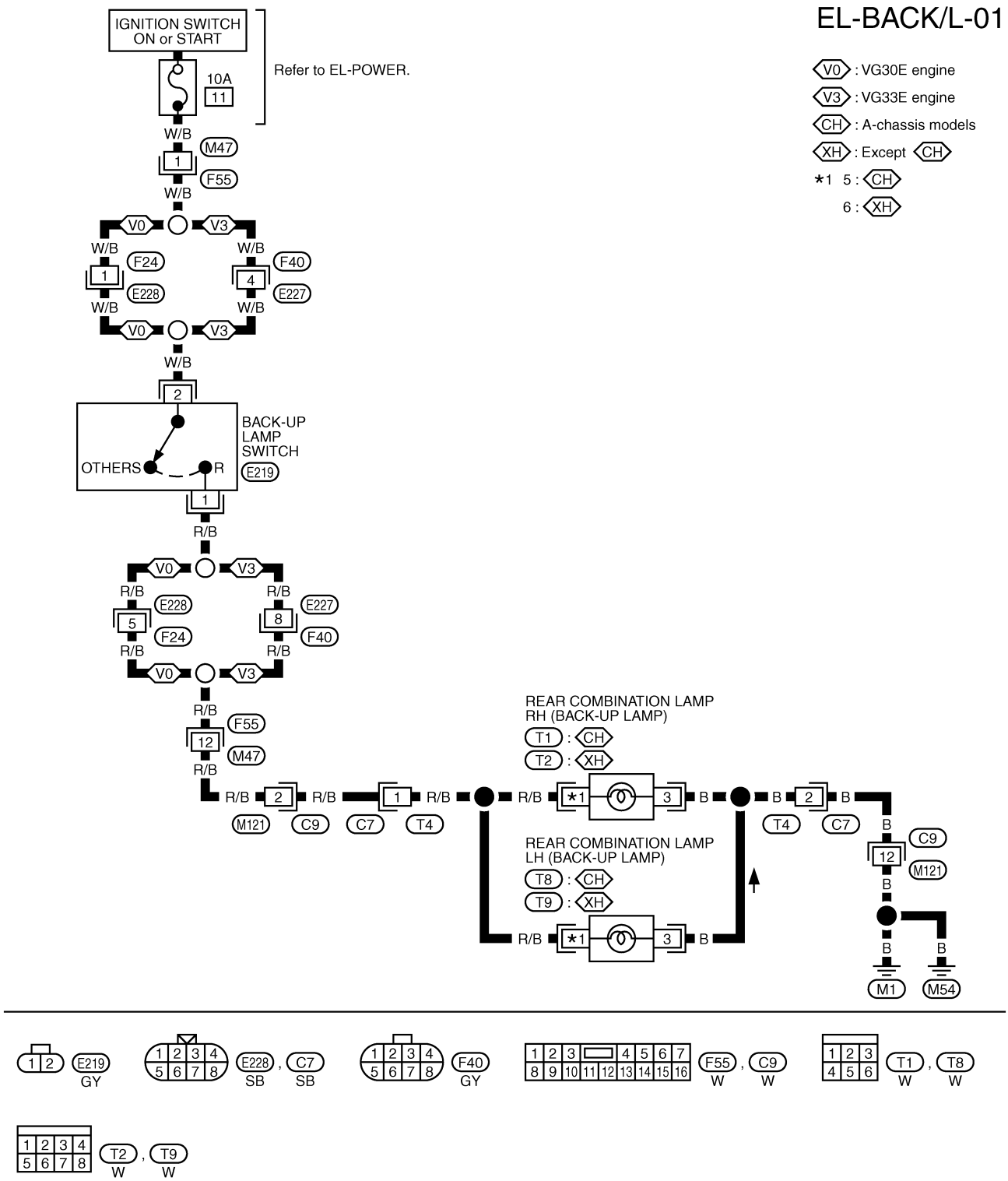

GEL539A

Wiring Diagram — BACK/L —/A/T Models for QD Engine

EL-BACK/L-02

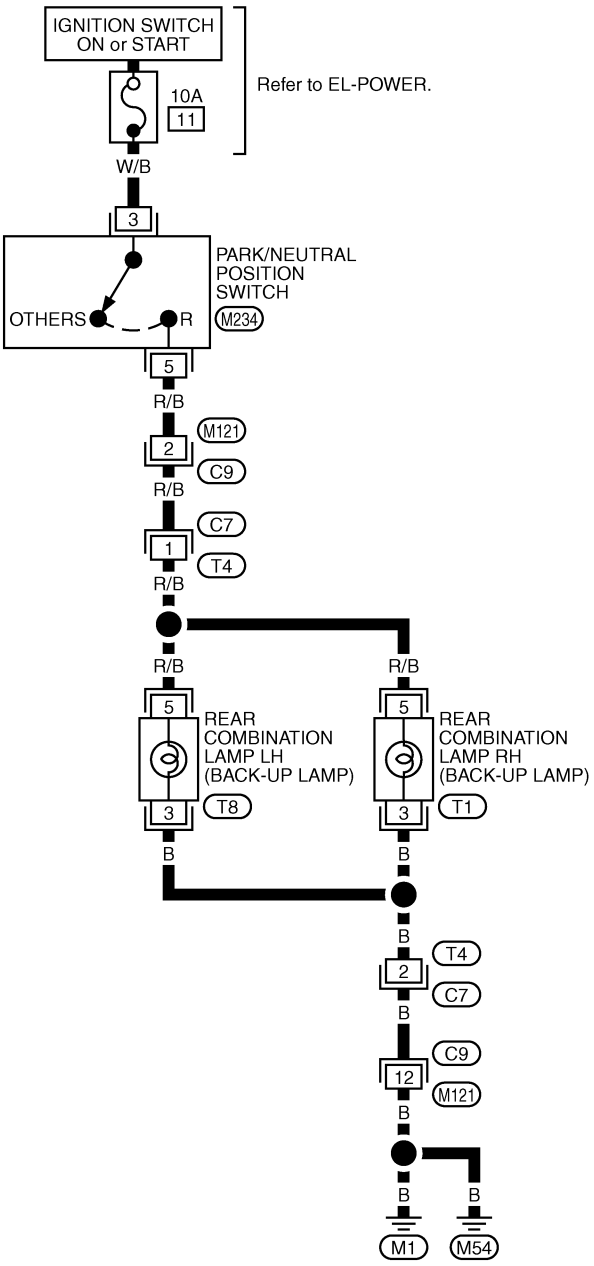

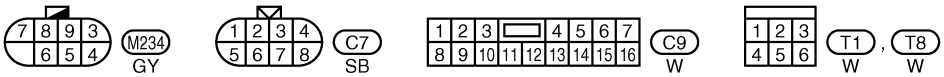

GEL815A

Wiring Diagram — F/FOG —/LHD Models for Europe

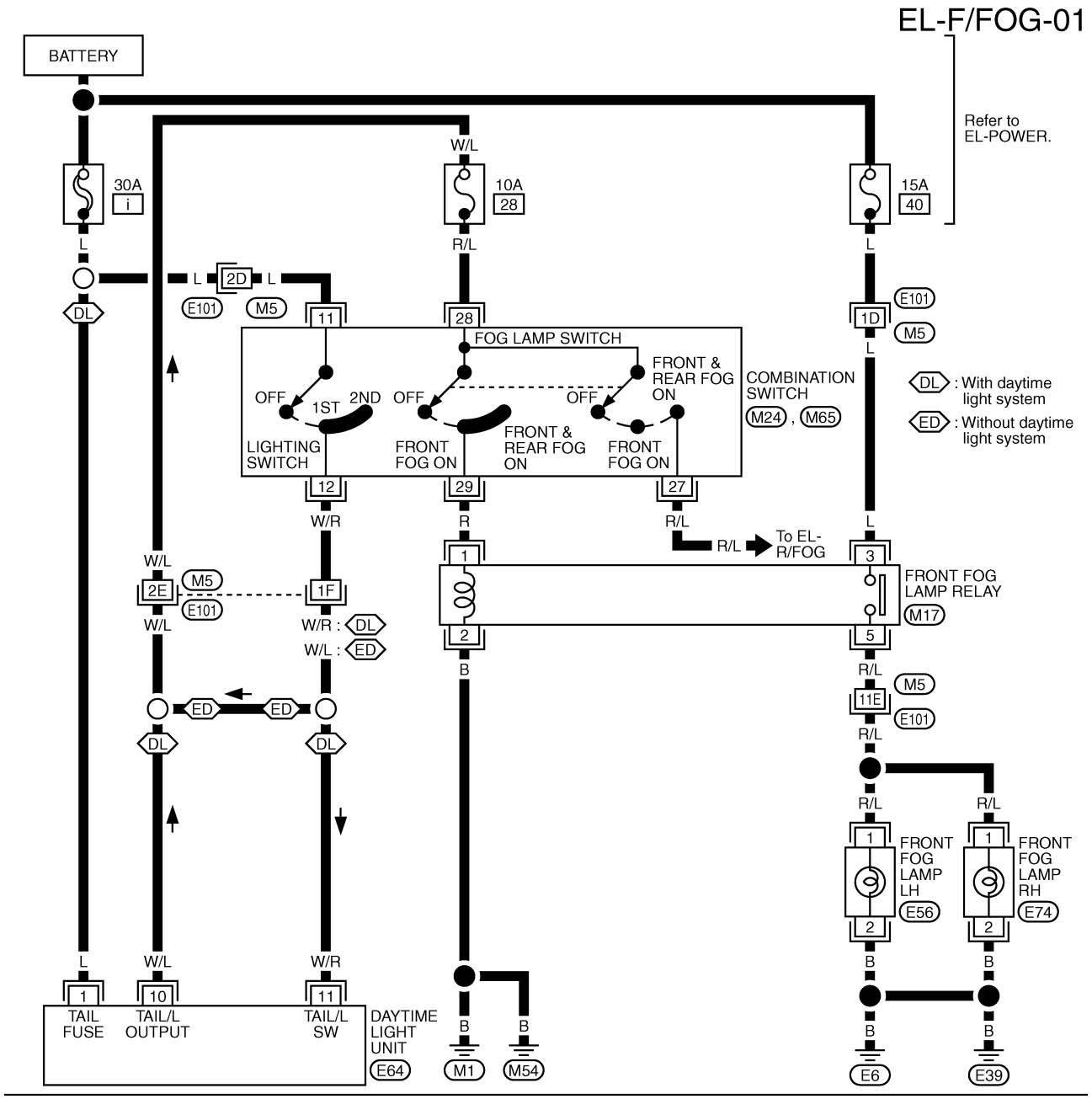

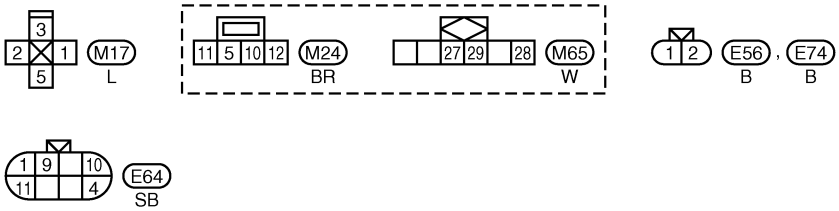

Refer to last page (Foldout page).

M5 , E101

GEL861A

Wiring Diagram — F/FOG —/RHD Models for Europe

EL-F/FOG-02

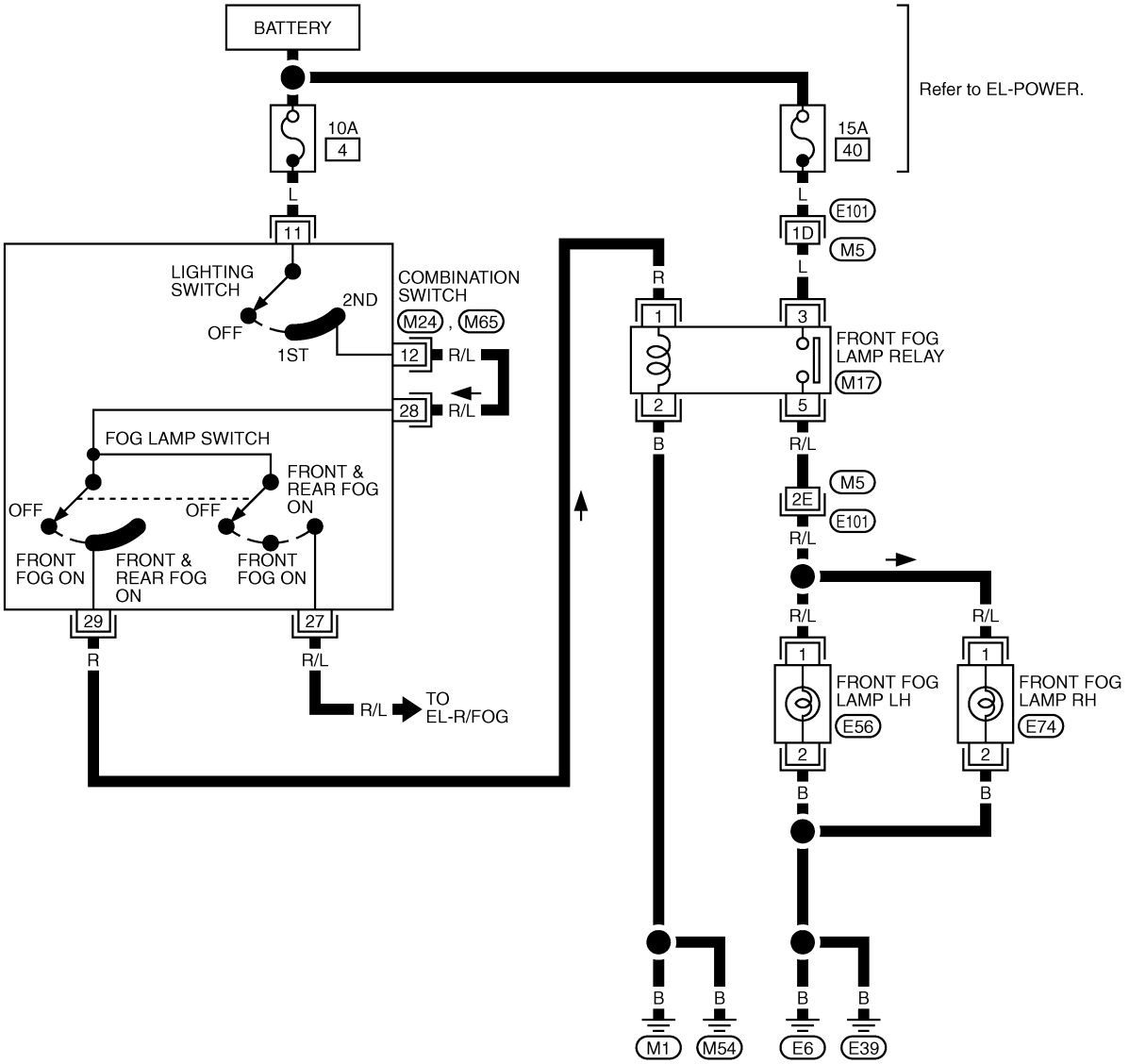

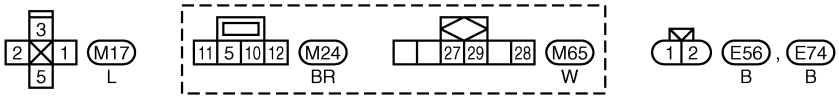

Refer to last page (Foldout page).
M5 , E101

GEL862A

Wiring Diagram — F/FOG —/Except for Europe

EL-F/FOG-03

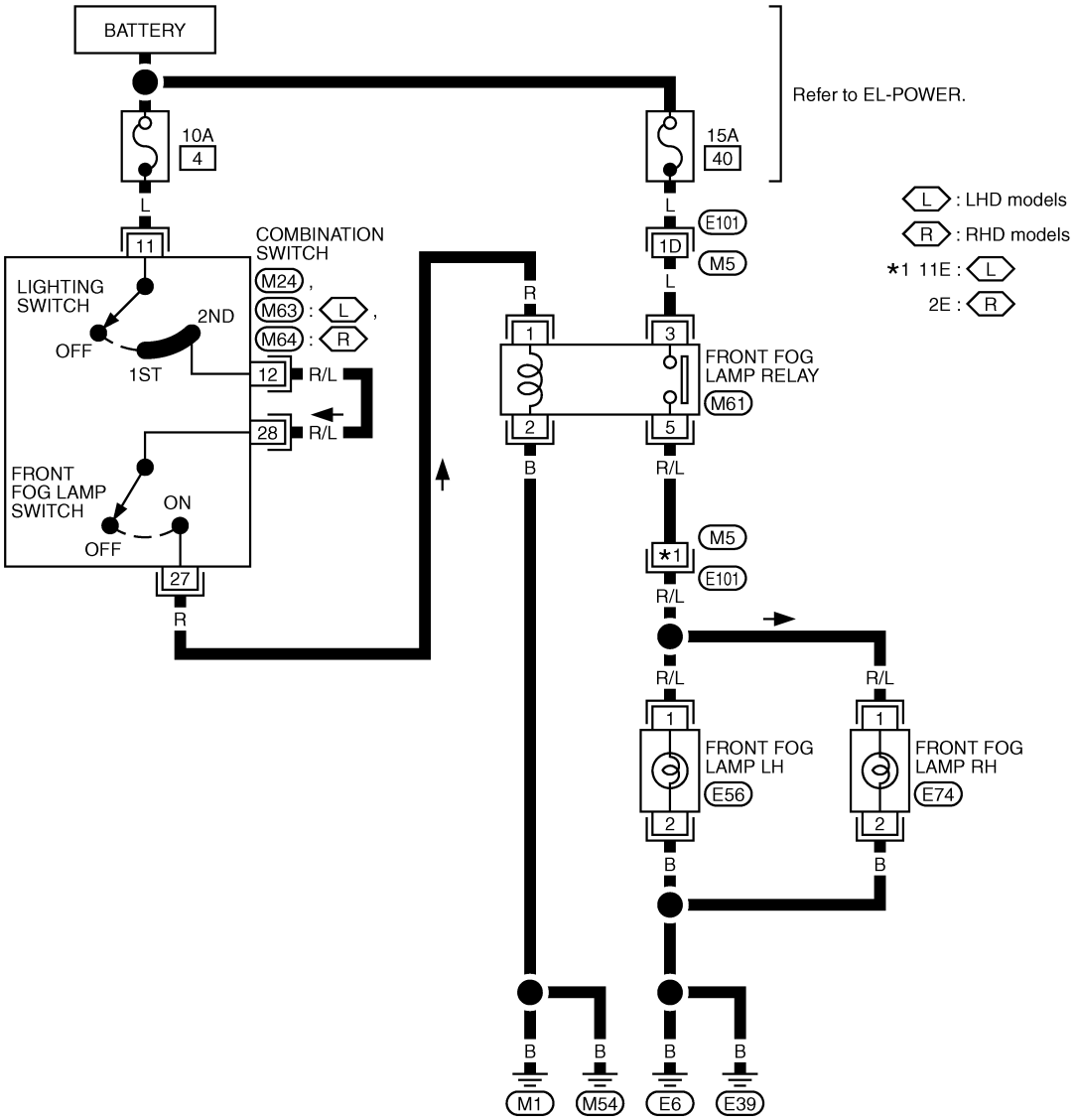

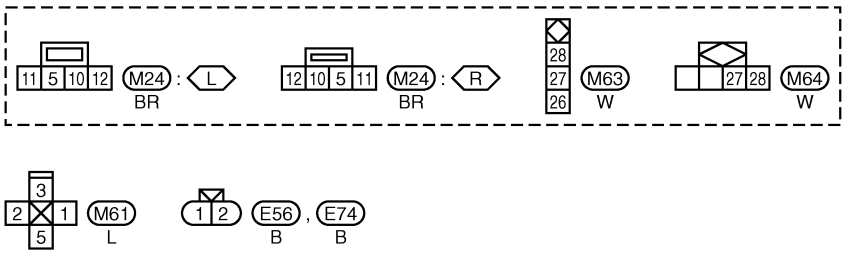

Refer to last page (Foldout page).
M5 , E101

GEL863A

Wiring Diagram — R/FOG —/LHD Models without Front Fog Lamp

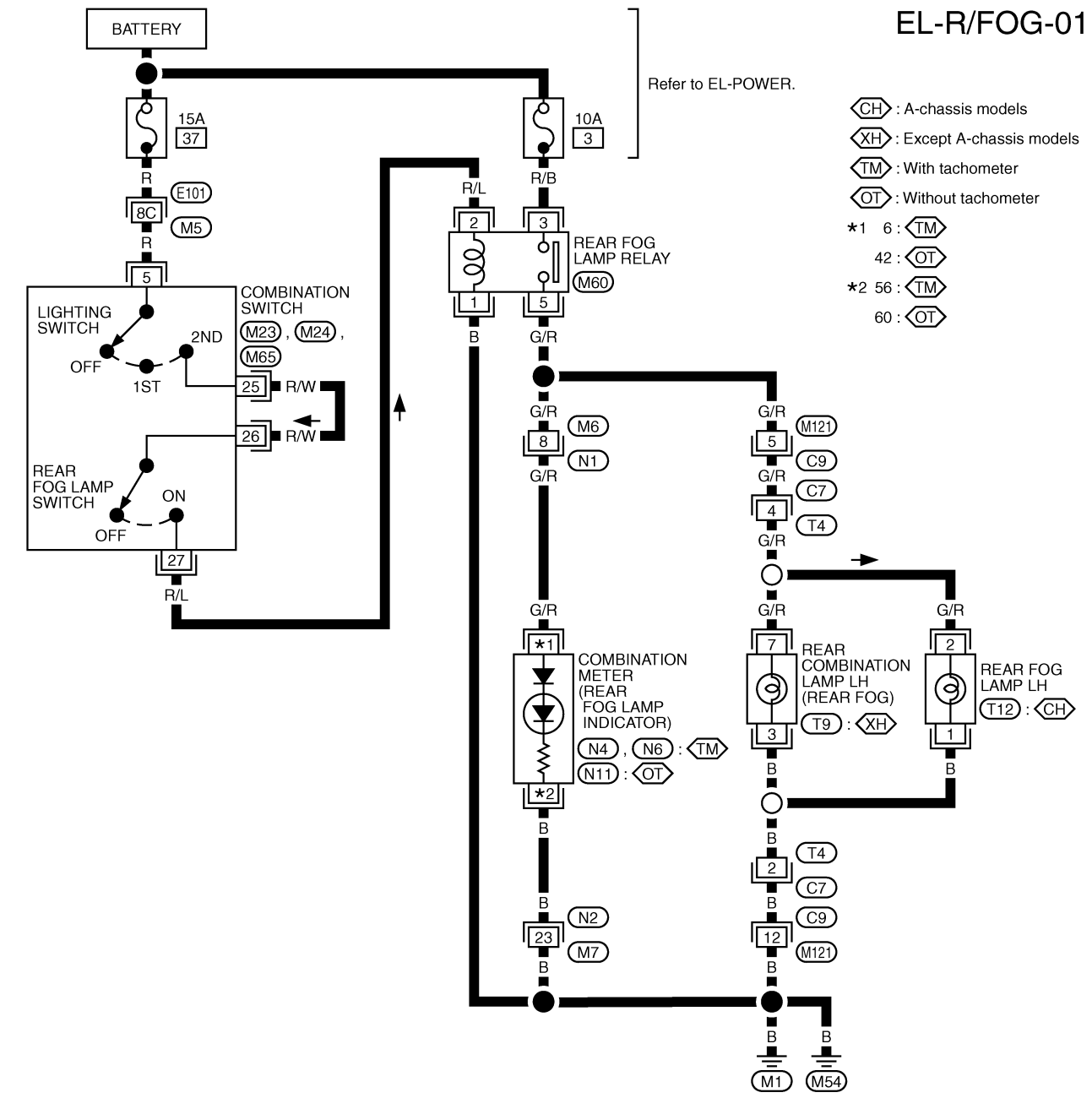

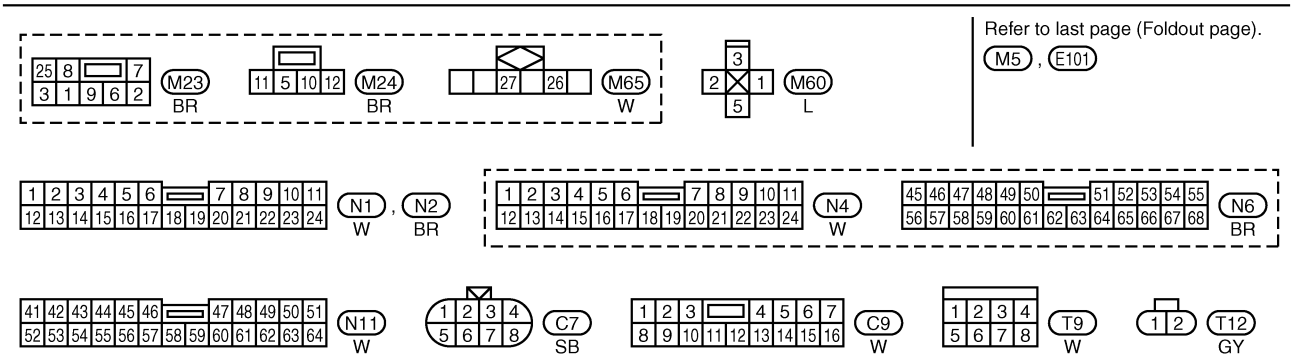

Refer to last page (Foldout page).
M5 , E101

GEL670A

Wiring Diagram — R/FOG —/RHD Models without Front Fog Lamp

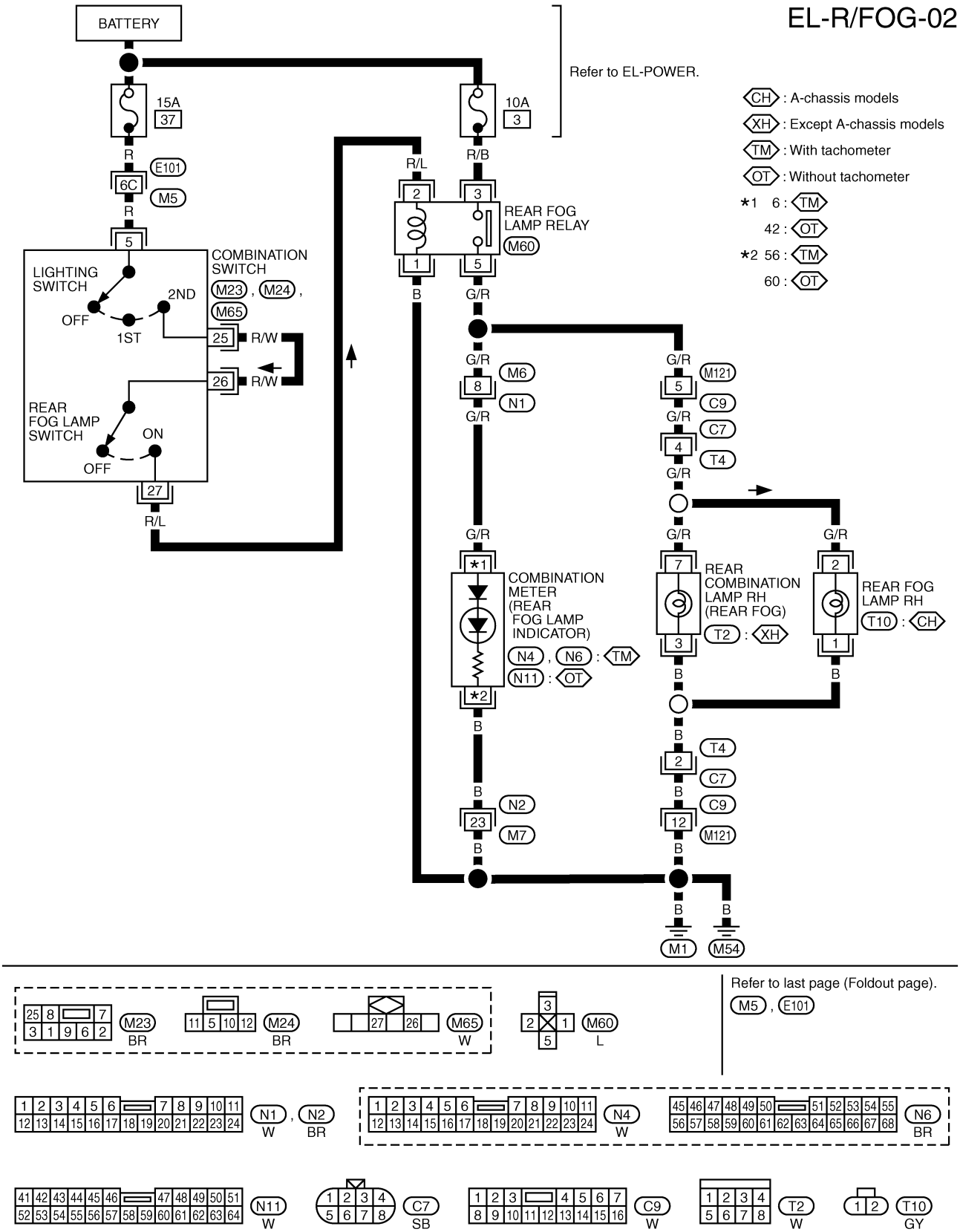

GEL671A

Wiring Diagram — R/FOG —/LHD Models with Front Fog Lamp

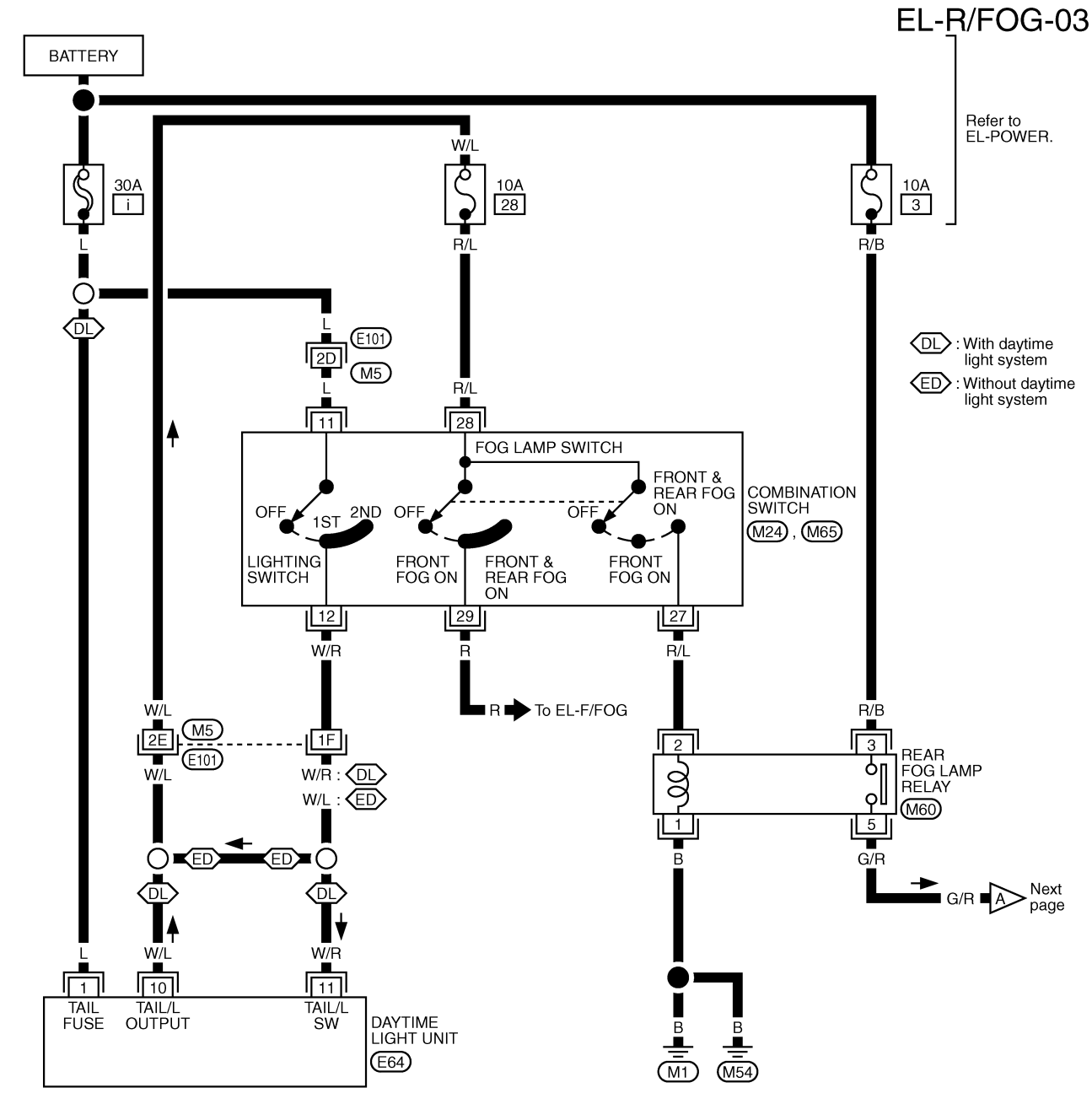

Refer to last page (Foldout page).
M5 , E101

GEL672A

Wiring Diagram — R/FOG —/LHD Models with Front Fog Lamp (Cont'd)

EL-R/FOG-04

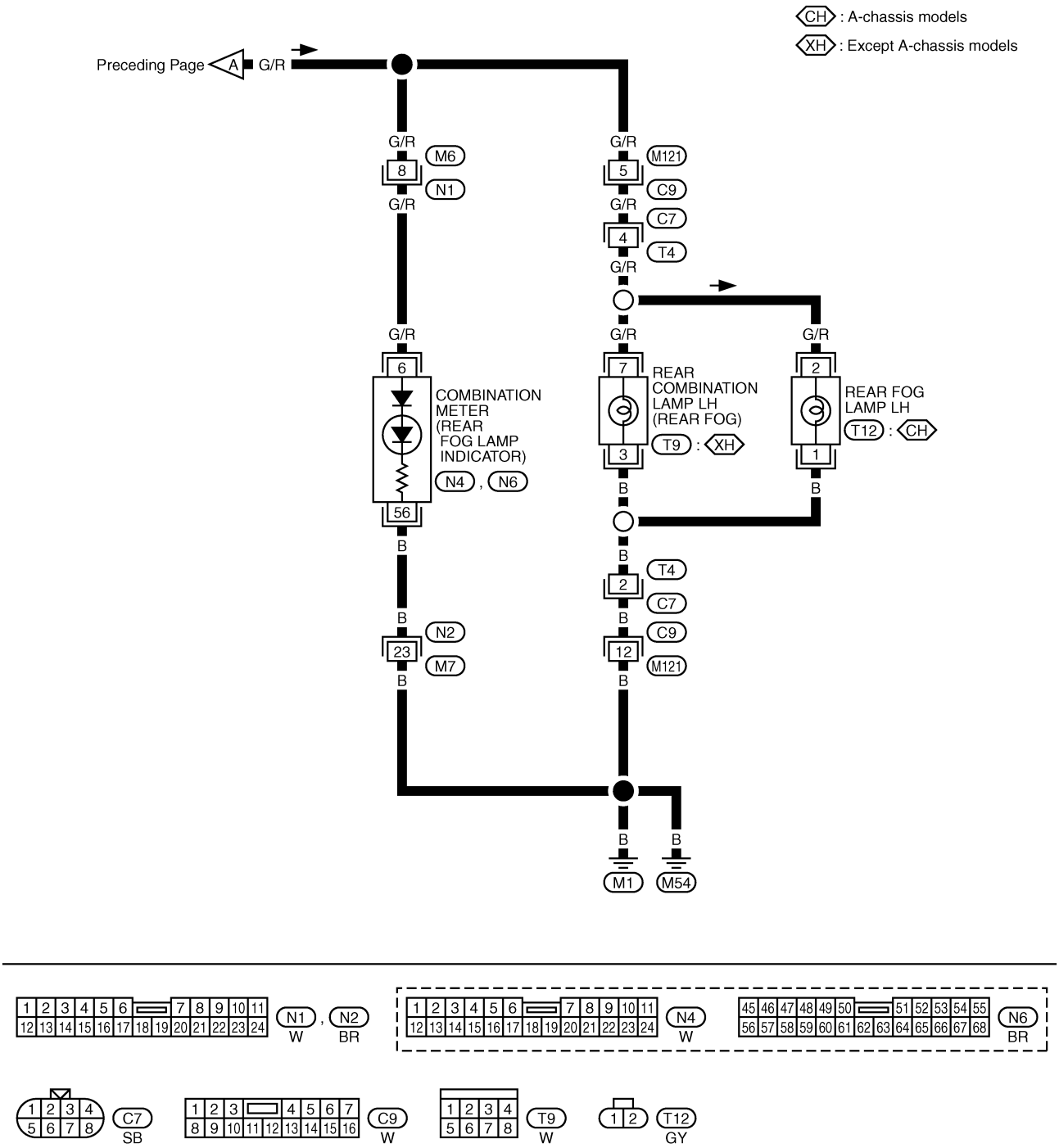

GEL673A

Wiring Diagram — R/FOG —/RHD Models with Front Fog Lamp

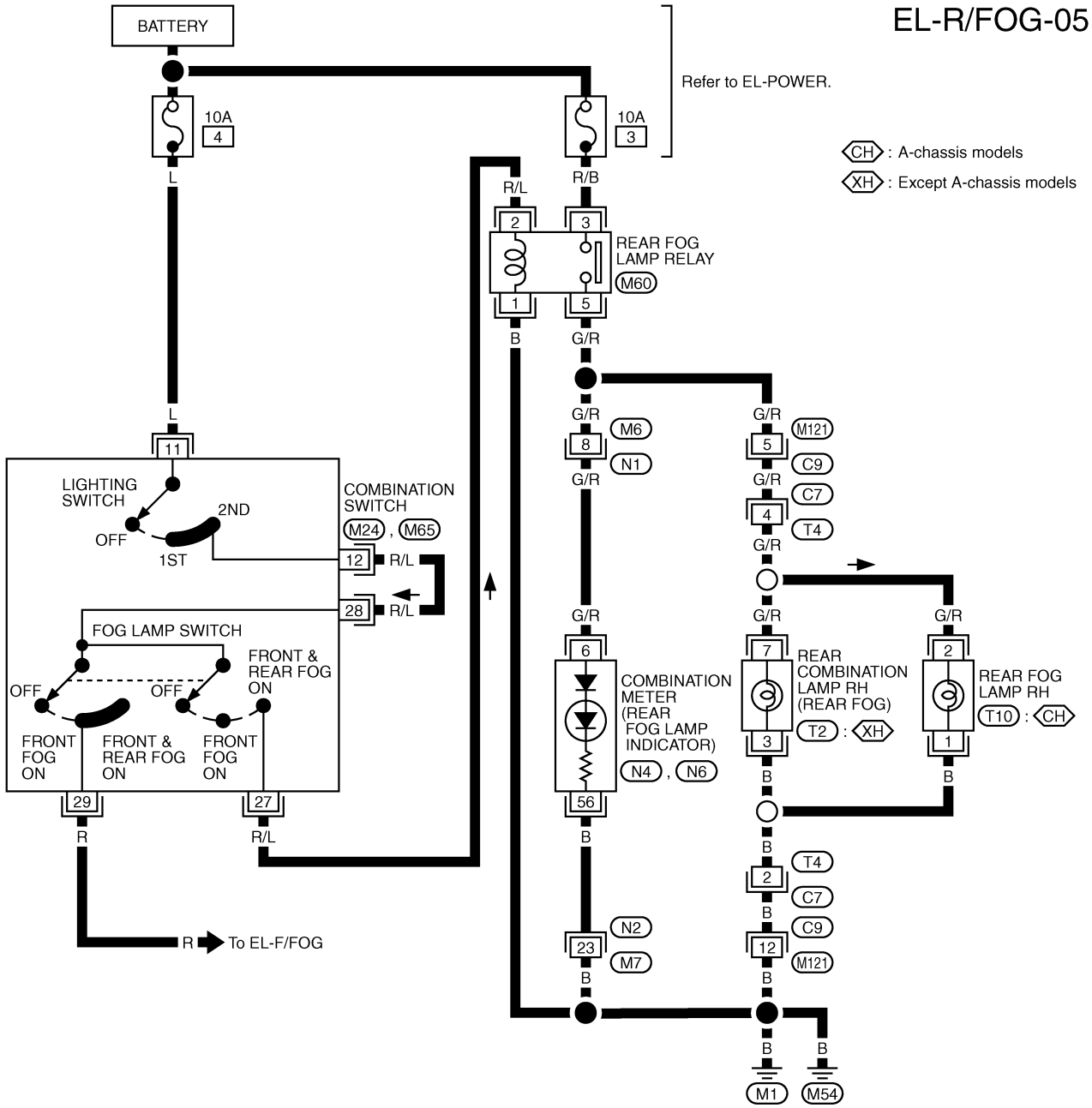

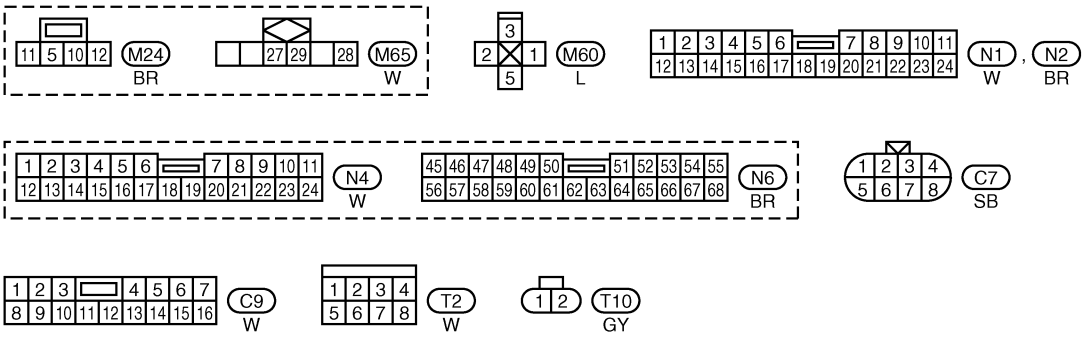

GEL674A

Wiring Diagram — ROOM/L —

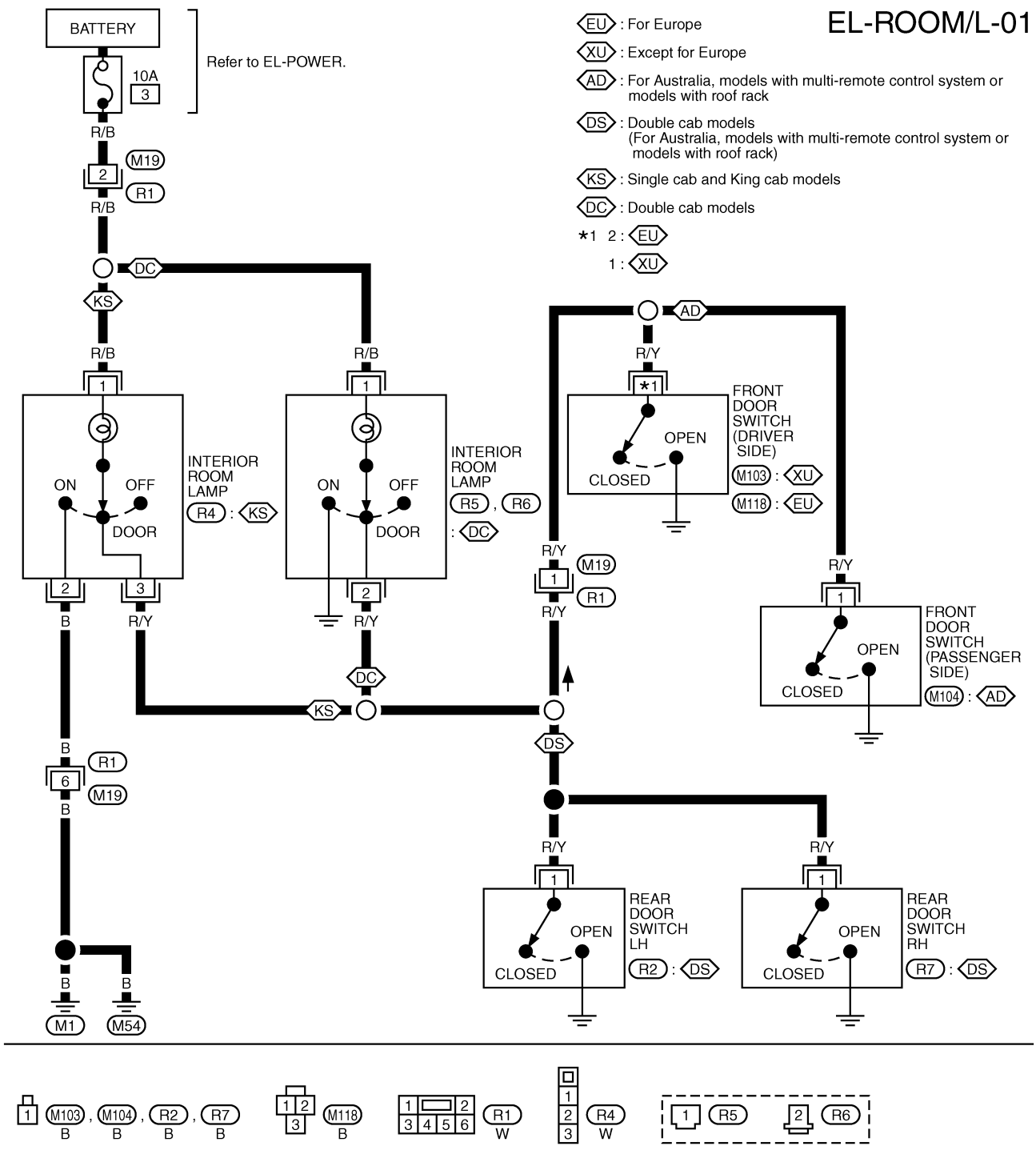

GEL602A

Wiring Diagram — ILL —/LHD Models

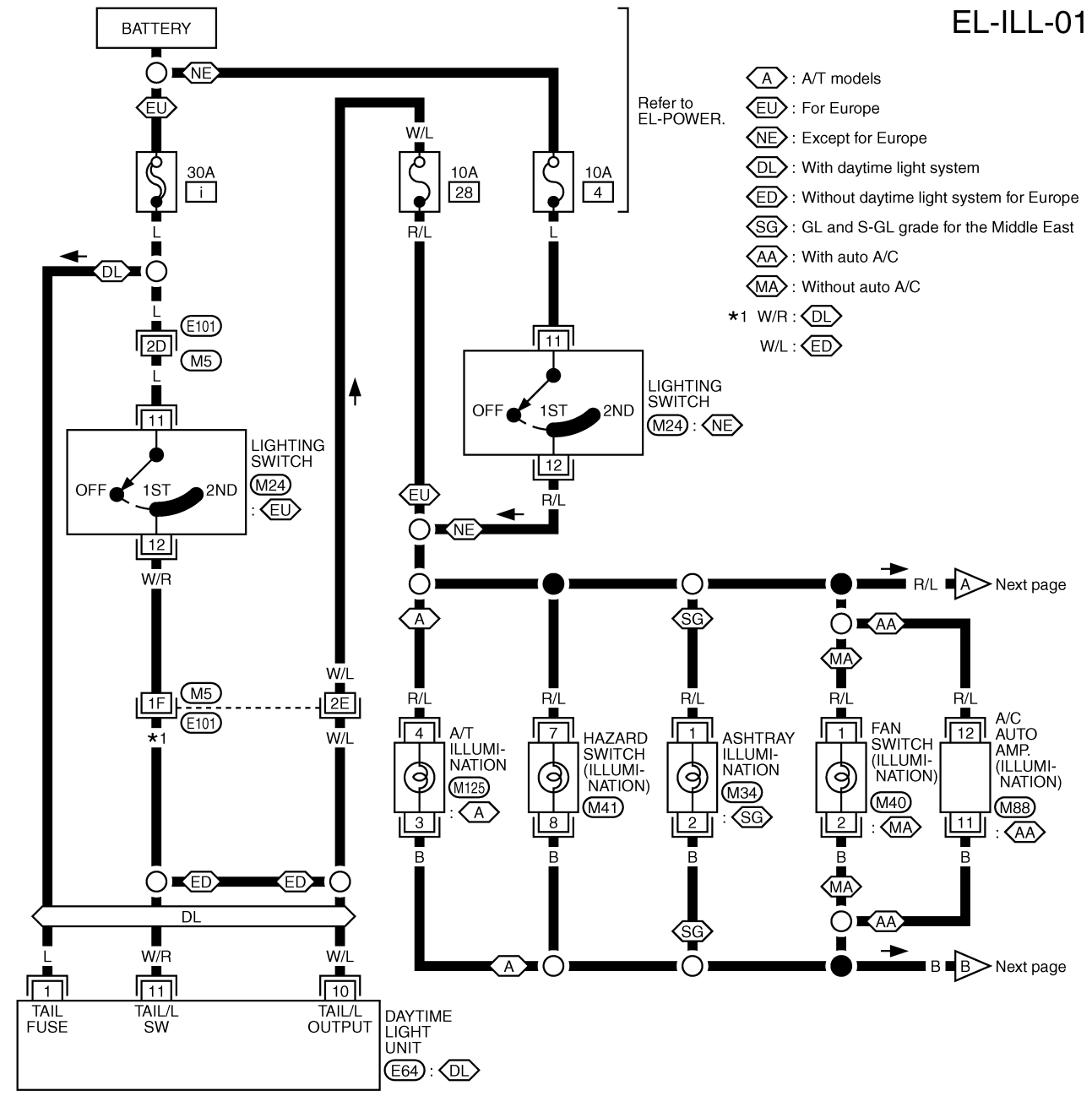

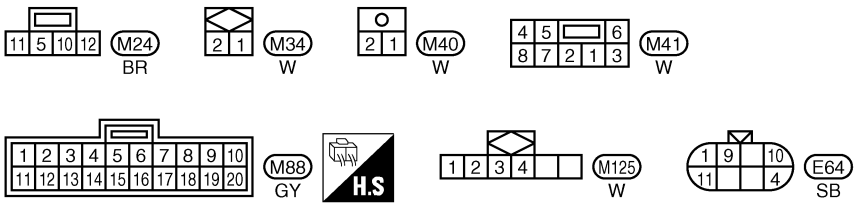

Refer to last page (Foldout page).
M5 , E101

GEL675A

Wiring Diagram — ILL —/LHD Models (Cont'd)

EL-ILL-02

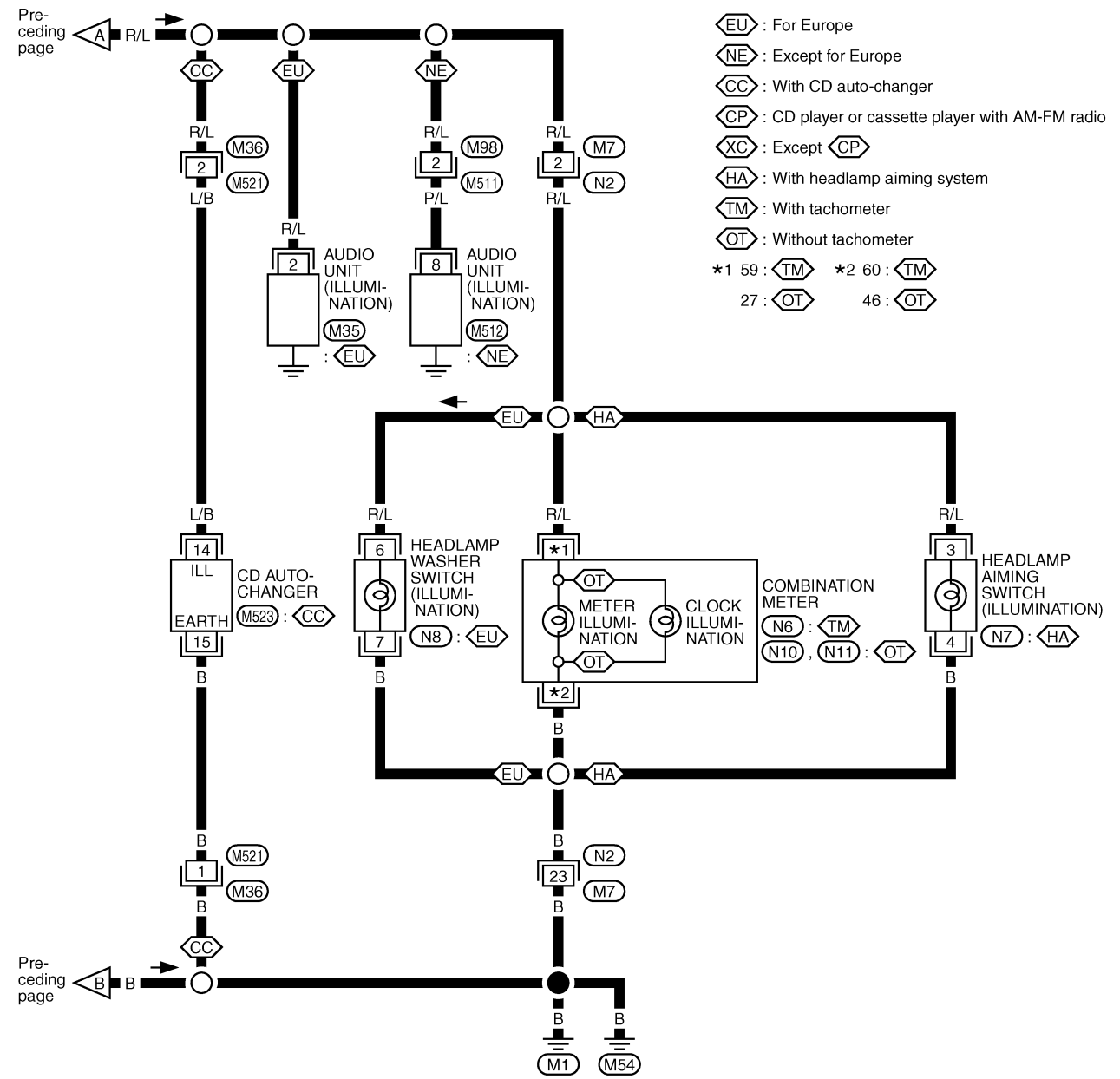

EU : For Europe
NE : Except for Europe
CC : With CD auto-changer
CP : CD player or cassette player with AM-FM radio
XC : Except CP
HA : With headlamp aiming system
TM : With tachometer
OT : Without tachometer
*1 59 : TM *2 60 : TM
27 : OT 46 : OT

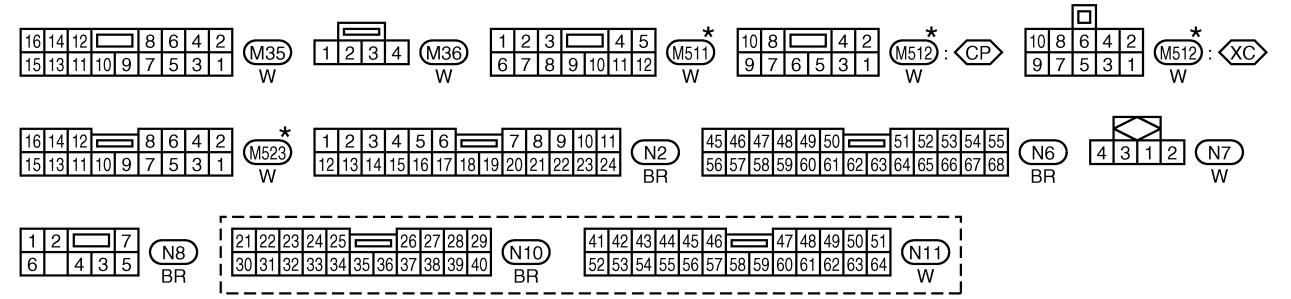

*: This connector is not shown in "HARNESS LAYOUT".

GEL676A

Wiring Diagram — ILL —/RHD Models

EL-ILL-03

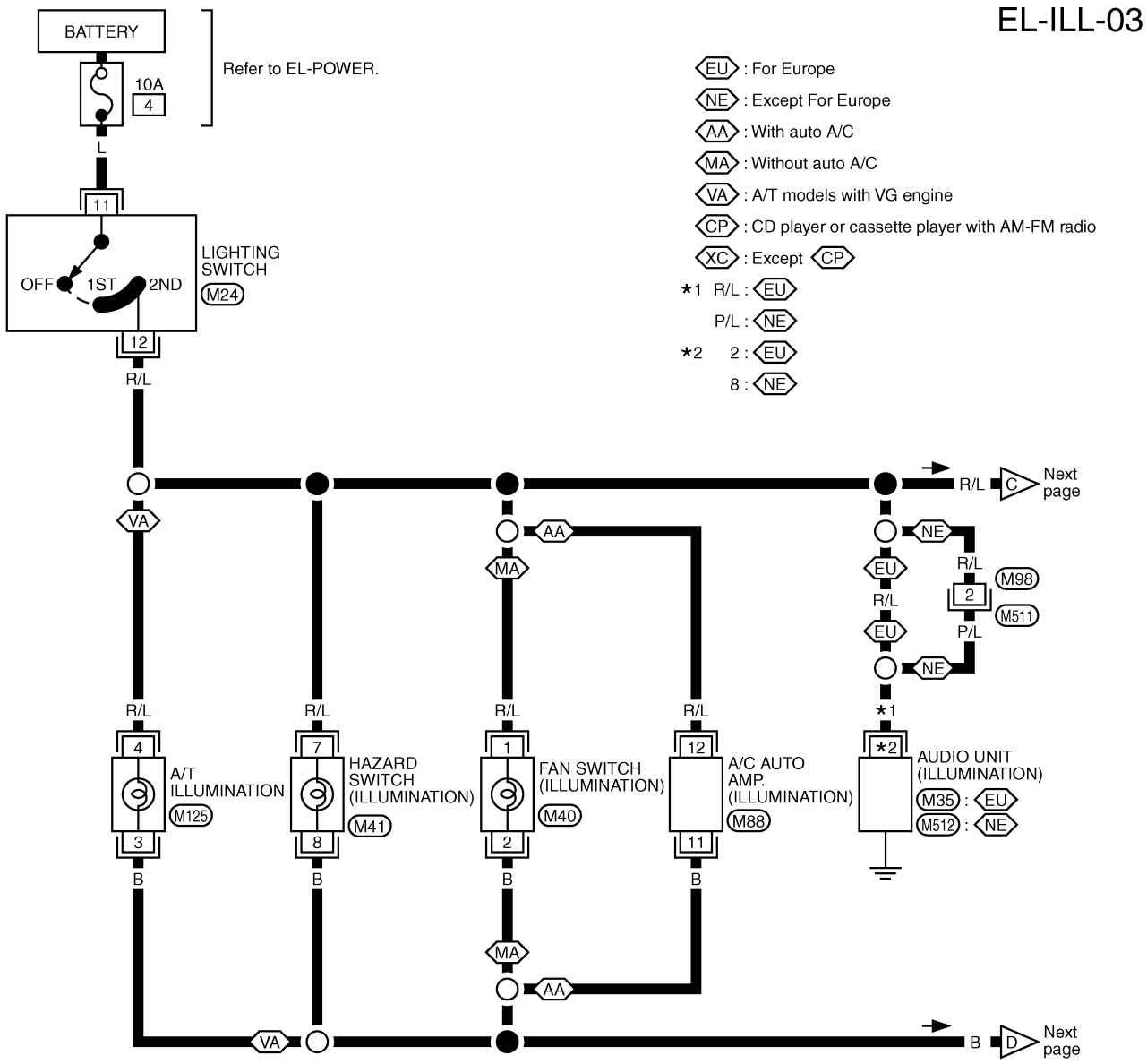

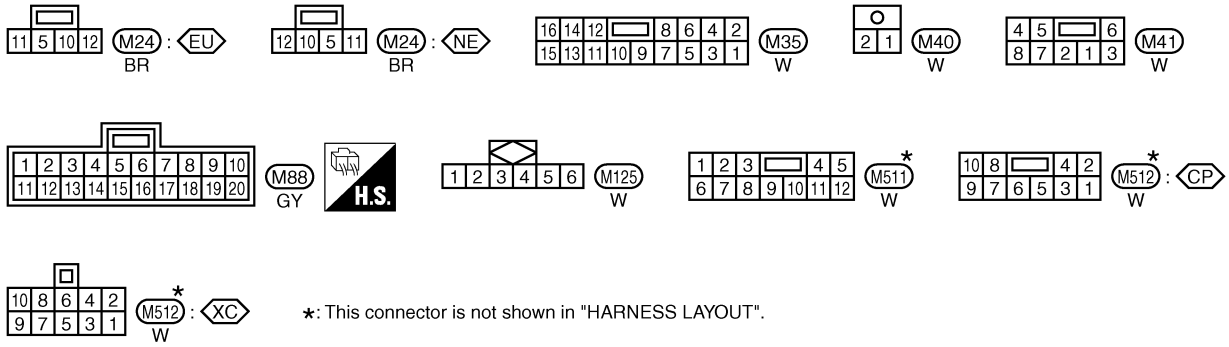

*: This connector is not shown in "HARNESS LAYOUT".

GEL387A

Wiring Diagram — ILL —/RHD Models (Cont'd)

EL-ILL-04

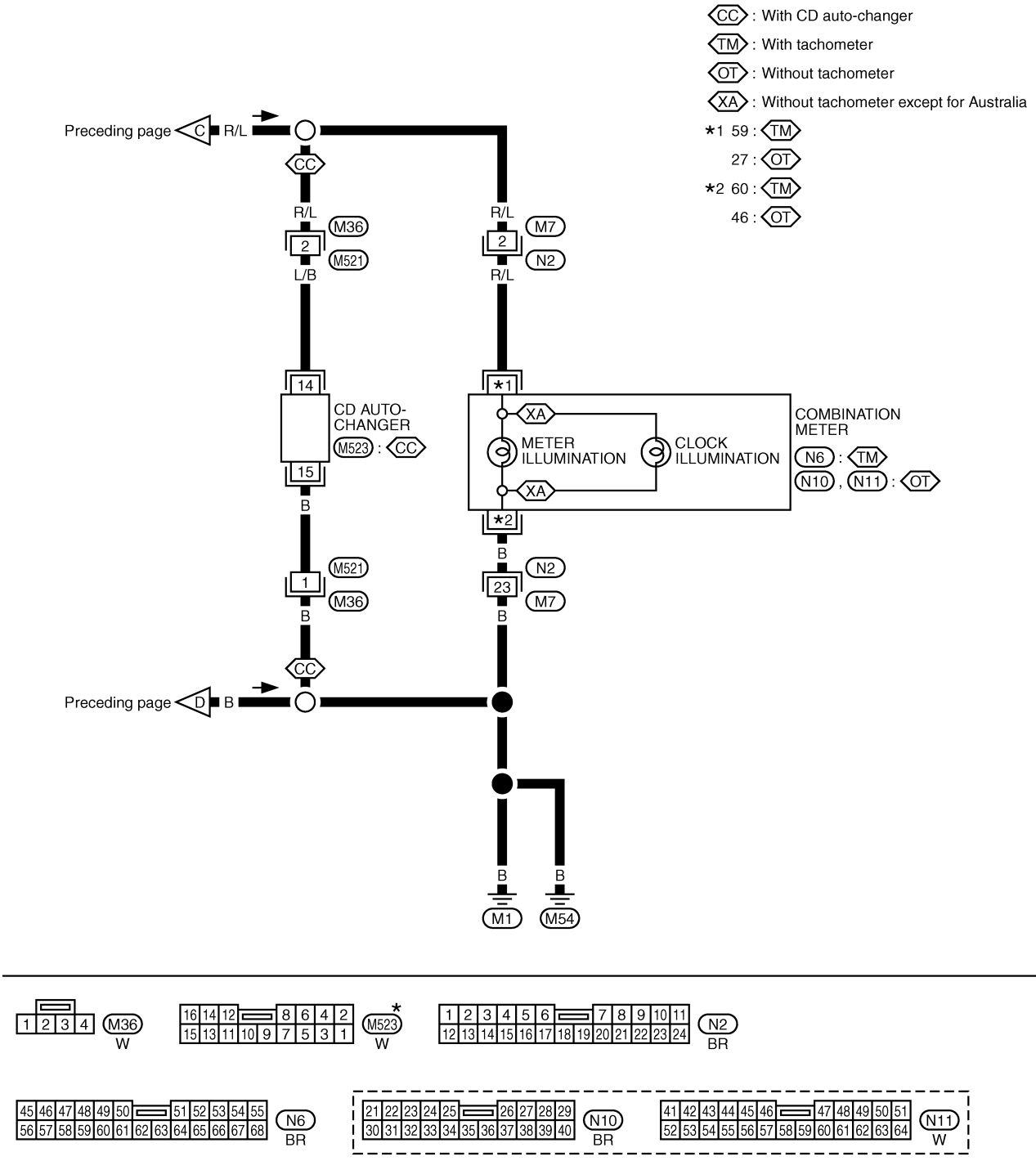

*: This connector is not shown in "HARNESS LAYOUT".

GEL677A

Combination Meter/With Tachometer

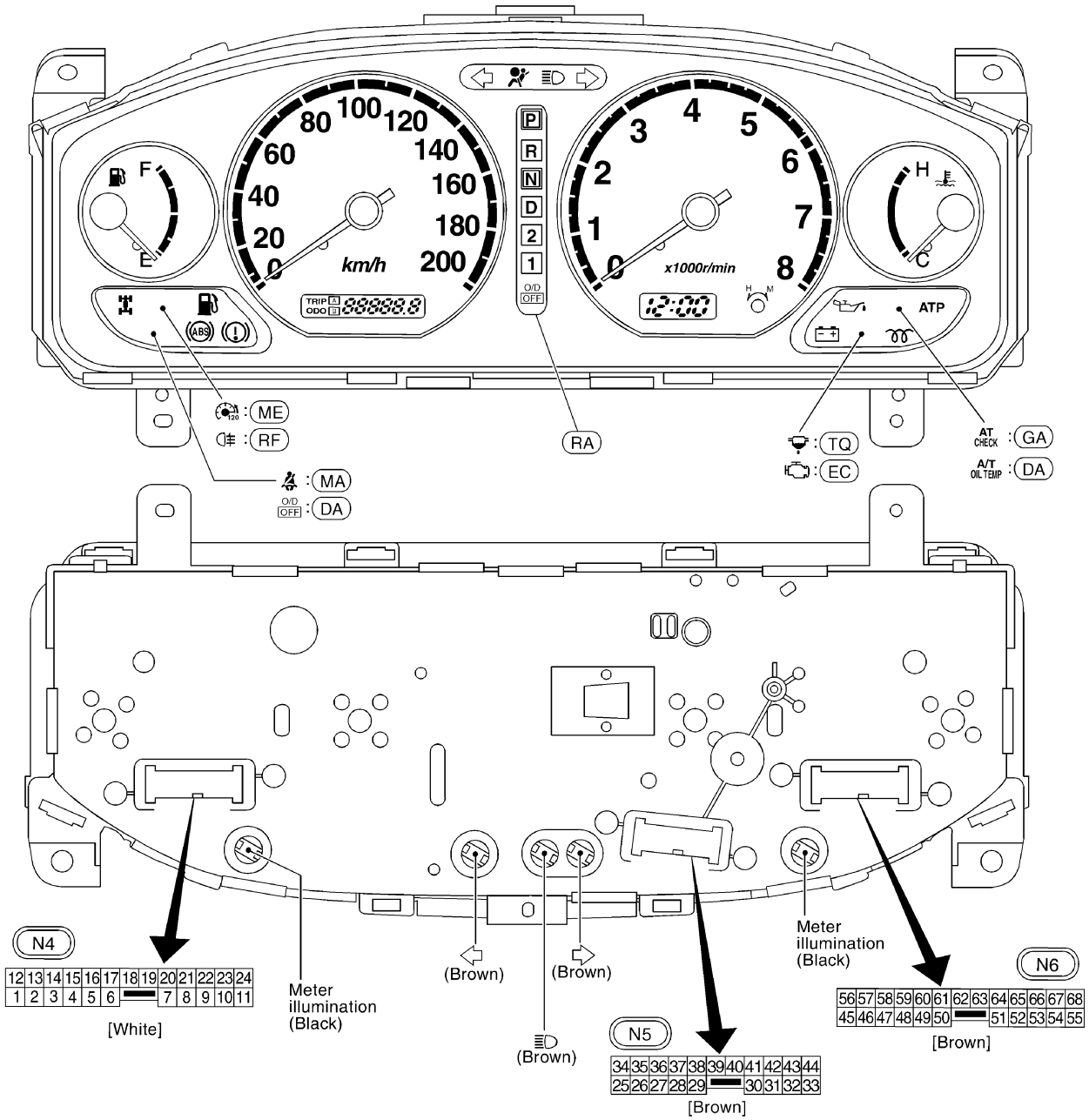

Bulb socket color	Bulb wattage
Brown	1.4W
Black	3.0W

( ) : Bulb socket color

(ME) : For the Middle East
(RF) : With rear fog lamp
(TQ) : TD and QD engines
(EC) : With ECM control engine
(DA) : With A/T and QD engine
(GA) : LHD models with A/T and KA engine
(RA) : RHD models with A/T
(MA) : For Australia and the Middle East

HEL038C

Combination Meter/Without Tachometer

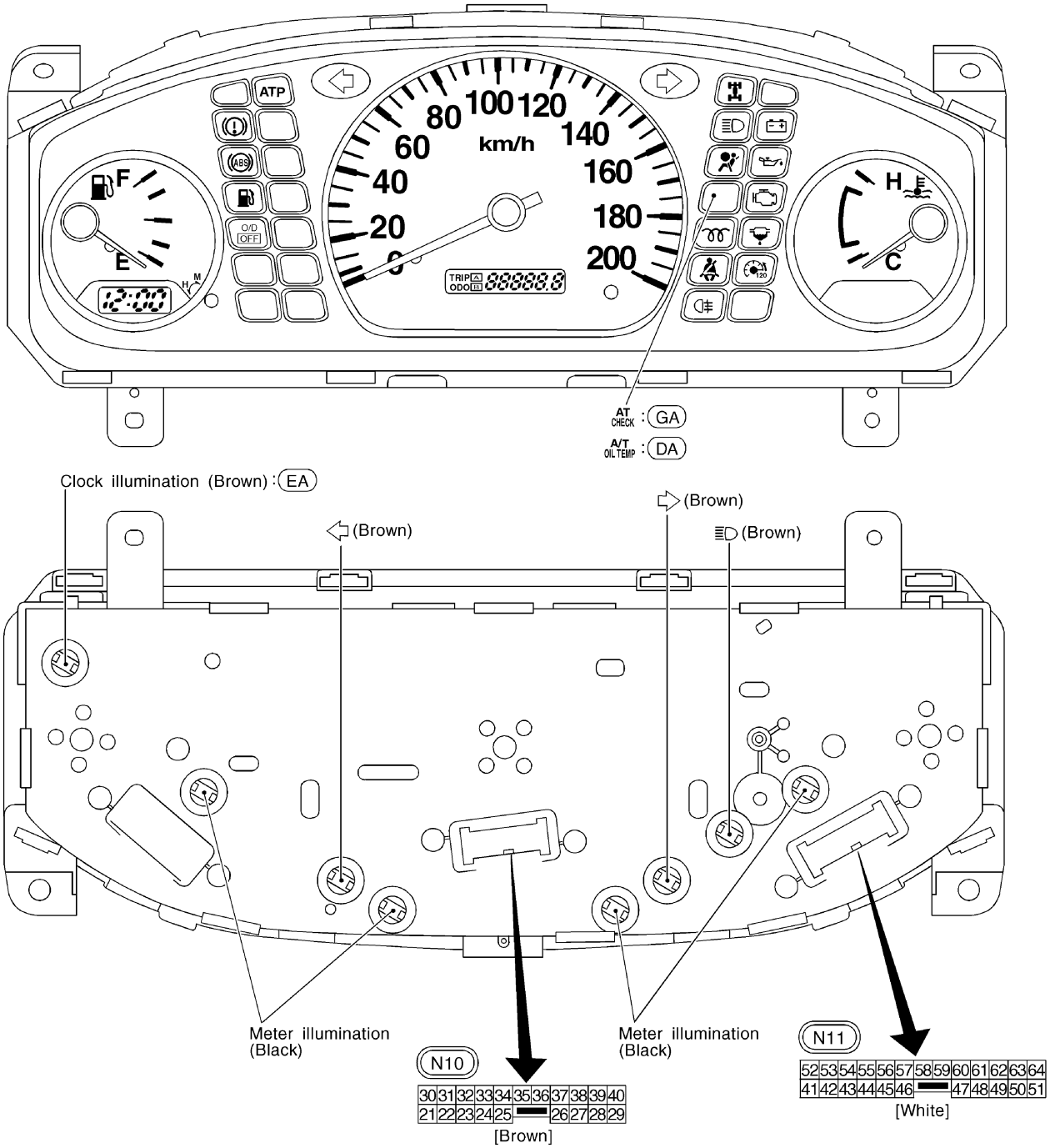

EA : Except for Australia

DA : With A/T and QD engine

GA : LHD models with A/T and KA engine

Bulb socket color	Bulb wattage
Brown	1.4W
Black	3.0W

( ) : Bulb socket color

HEL039C

Schematic/With Tachometer

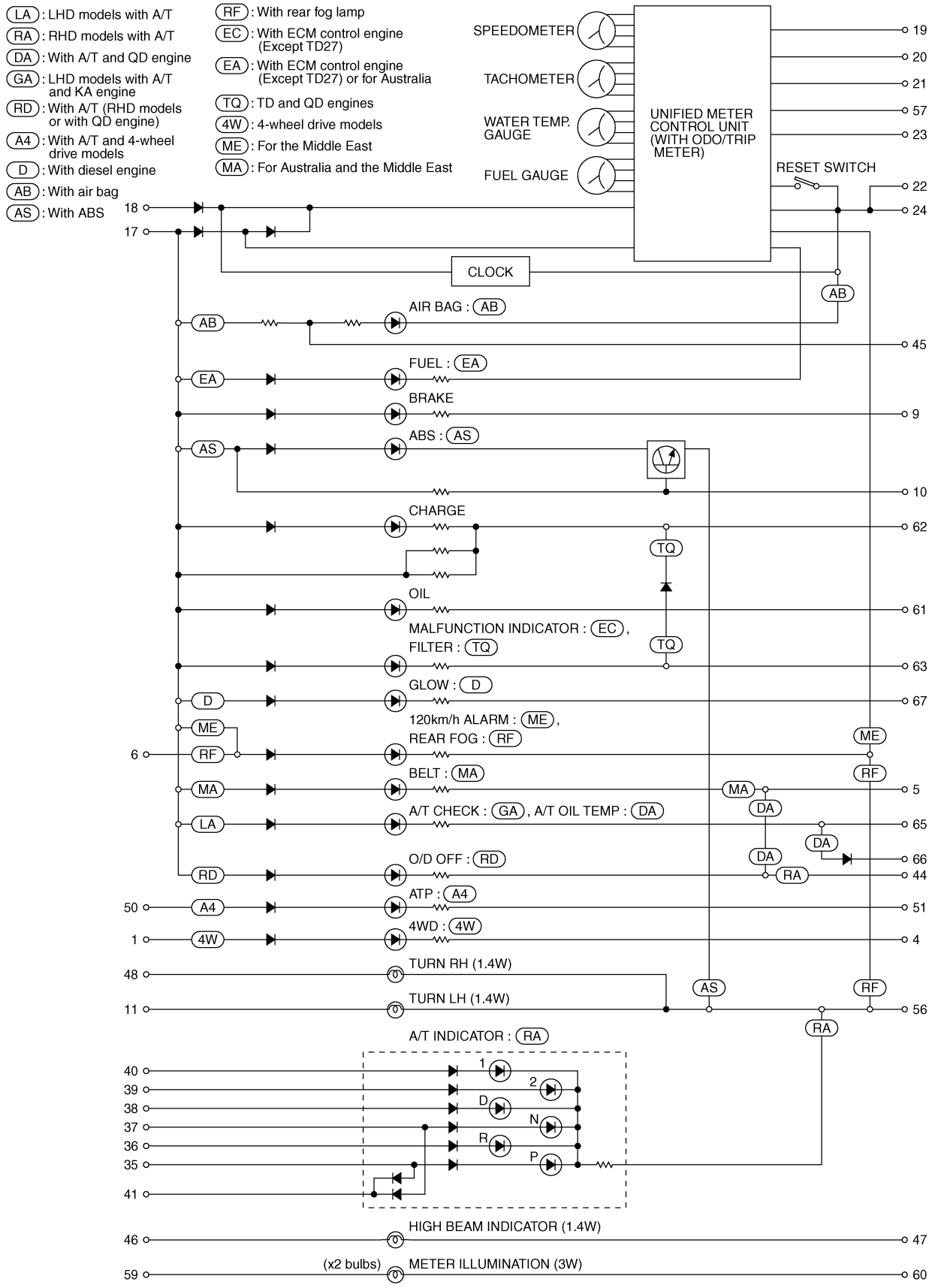

Schematic/Without Tachometer

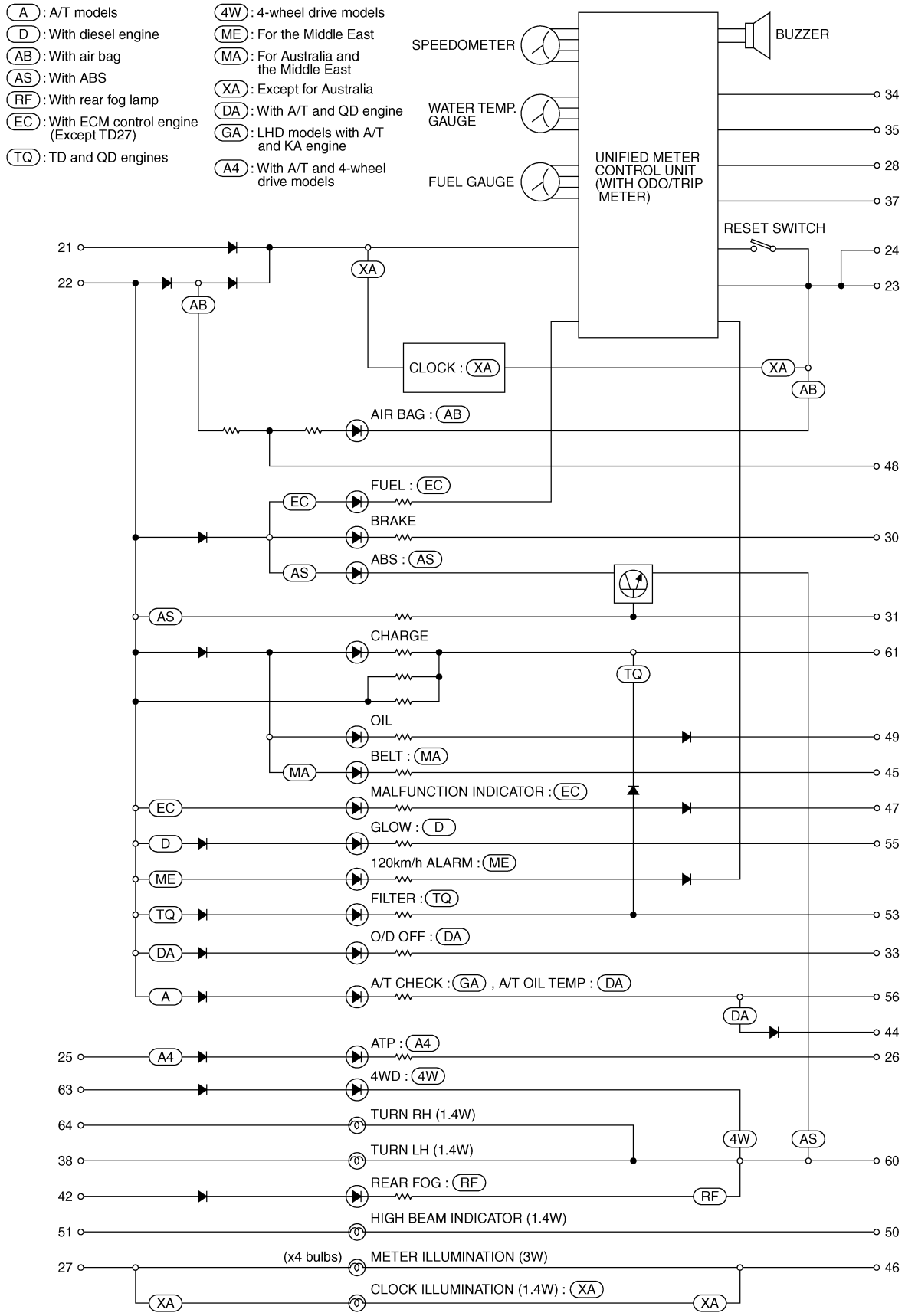

GEL817A

Wiring Diagram — METER —/Gasoline Engine with Tachometer

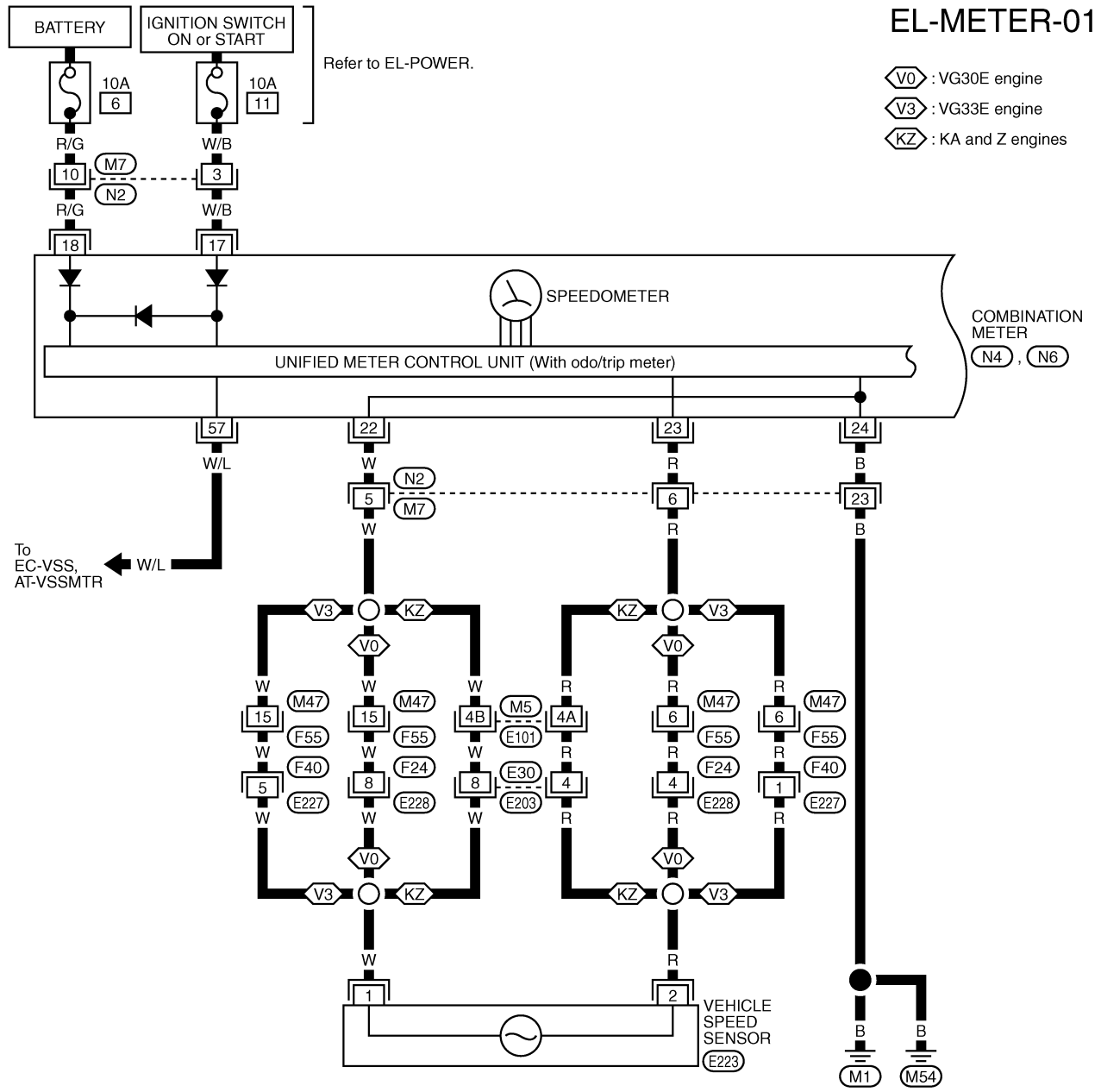

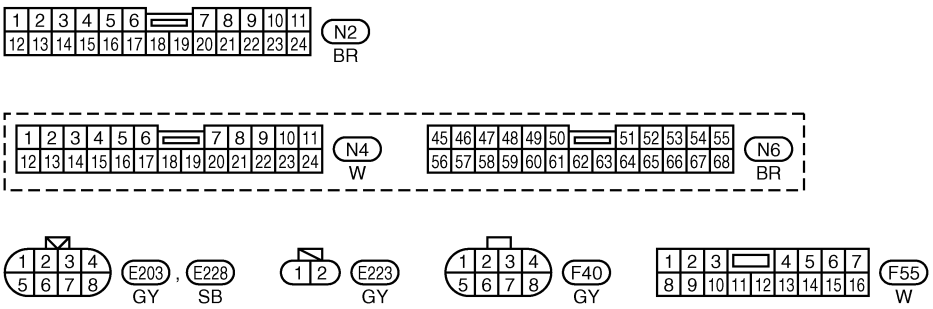

Refer to last page (Foldout page).
M5 , E101

GEL540A

Wiring Diagram — METER —/Gasoline Engine with Tachometer (Cont'd)

EL-METER-02

- L : LHD models
- R : RHD models
- EU : For Europe
- NE : Except for Europe
- CB : Carburetor engine
- VG : VG engine
- LK : LHD models with KA engine
- RK : RHD models with KA engine
- RV : RHD models with KA engine and VG engine
- *1 3C : L, 6A : R
- *2 3 : EU, 18 : NE
- *3 18 : RK, 7 : VG

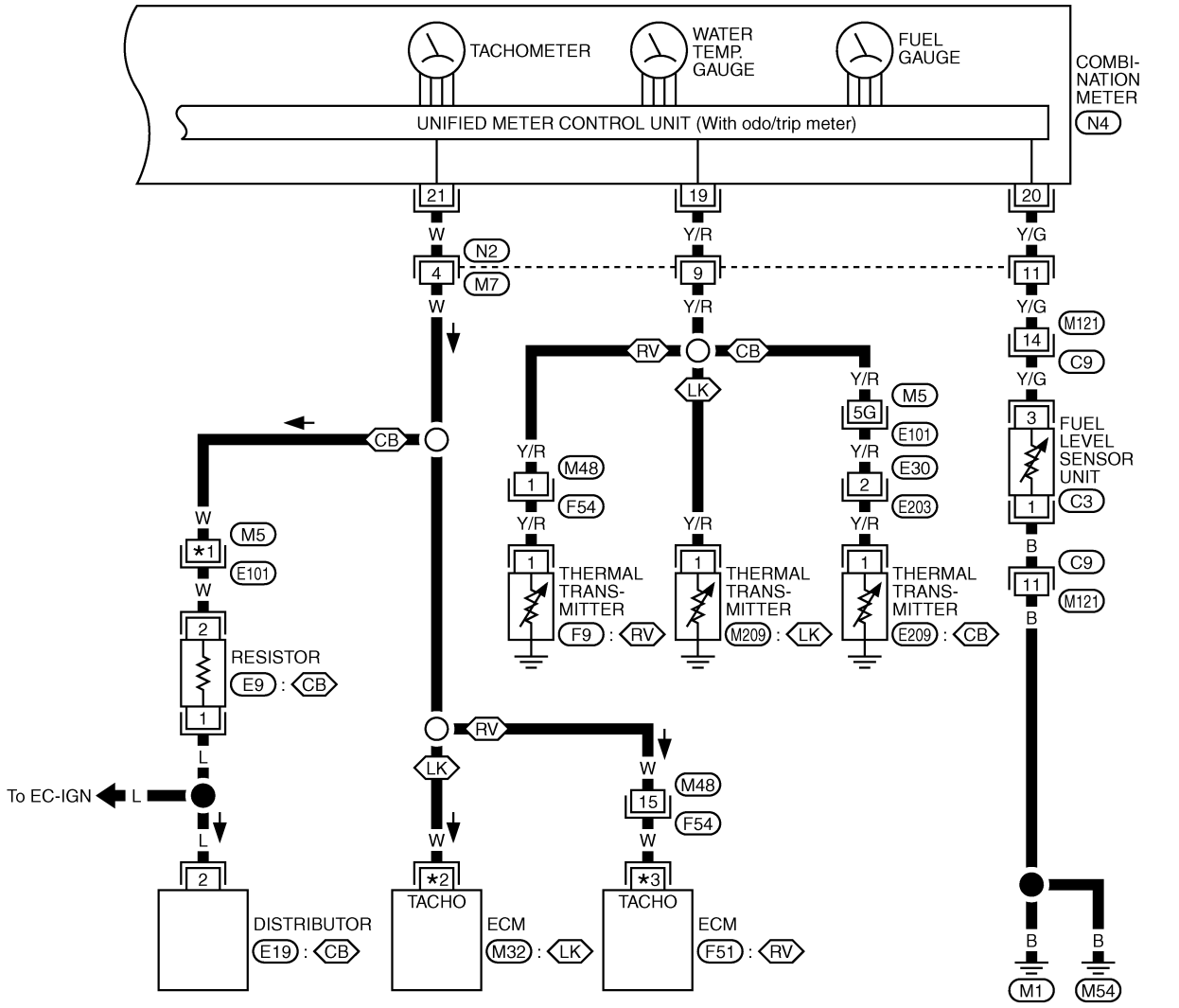

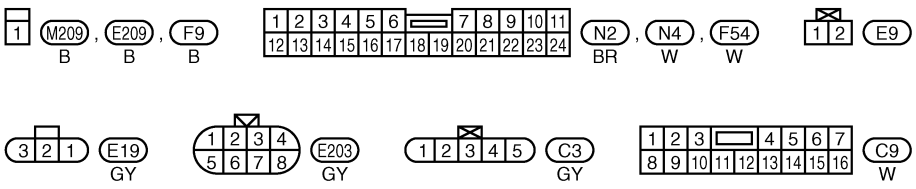

Refer to last page (Foldout page).
M5 , E101
M32
F51

GEL541A

Wiring Diagram — METER —/LHD Diesel Engine Models with Tachometer

EL-METER-03

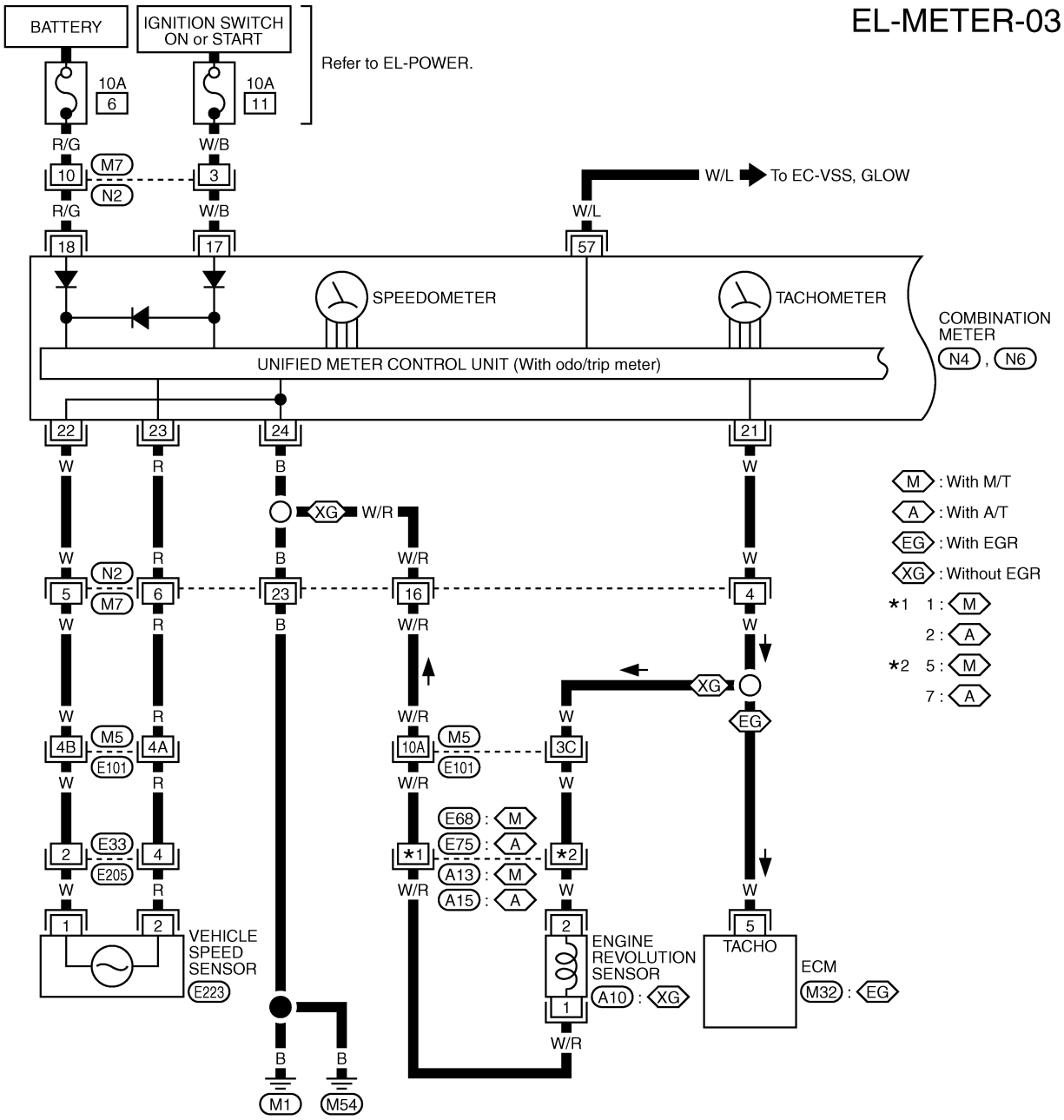

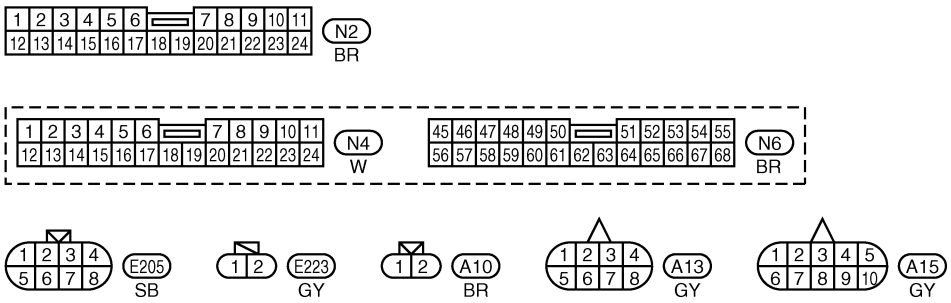

Refer to last page (Foldout page).
M5 , E101
M32

GEL818A

Wiring Diagram — METER —/LHD Diesel Engine Models with Tachometer (Cont'd)

EL-METER-04

M : With M/T
A : With A/T
YD : YD engine
ZD : ZD engine
YZ : YD and ZD engines
TQ : TD and QD engines

*1 7 : M
9 : A

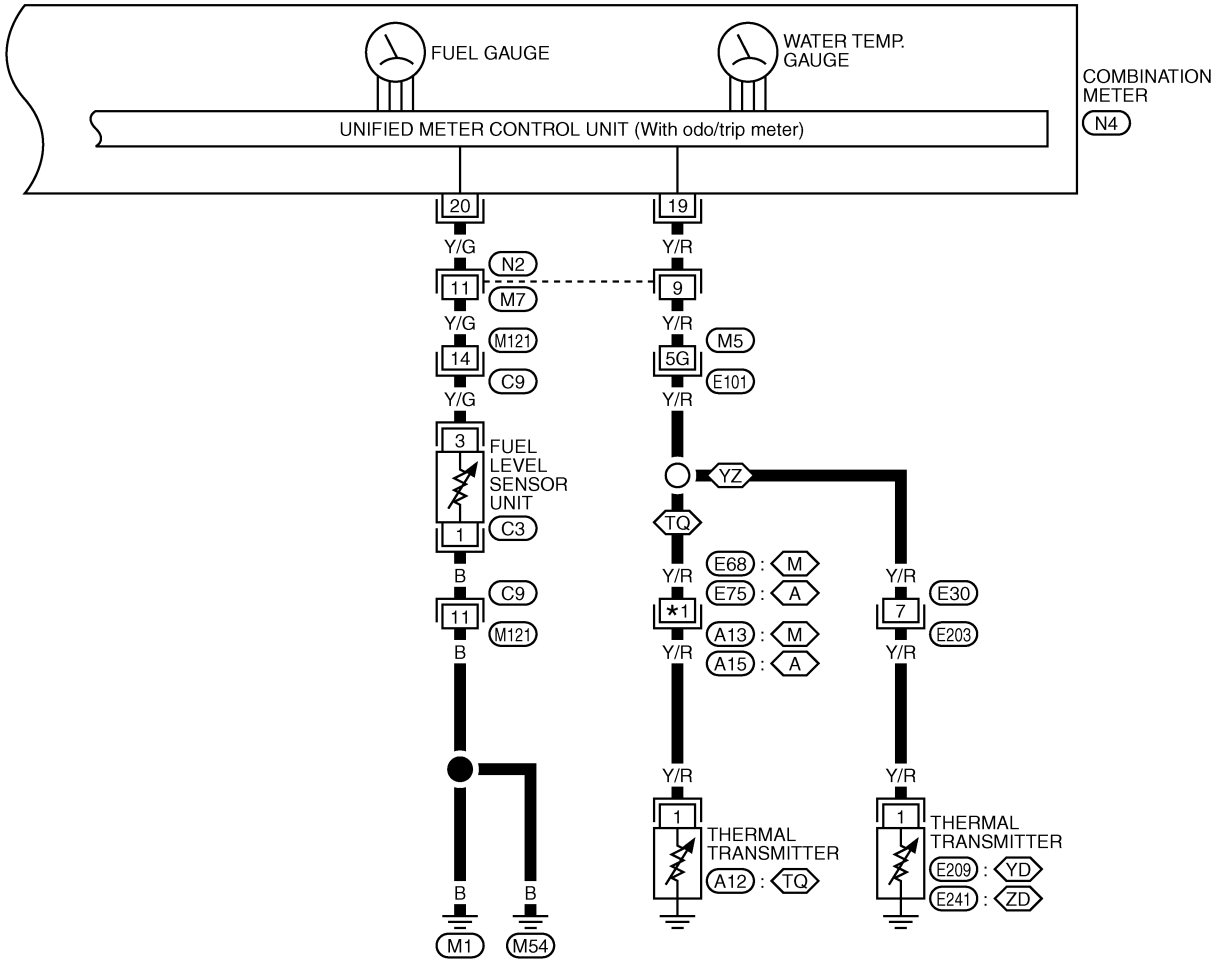

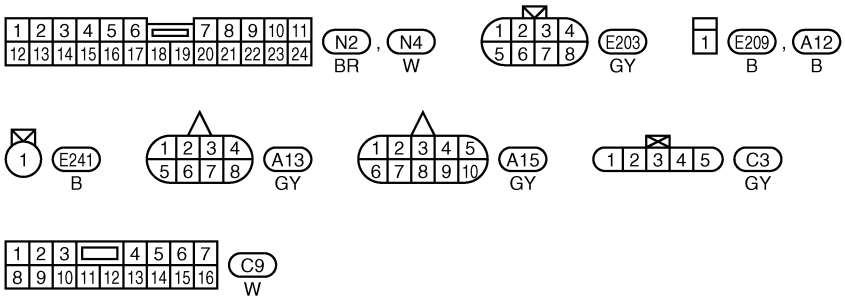

Refer to last page (Foldout page).
M5 , E101

GEL819A

Wiring Diagram — METER —/Diesel Engine without Tachometer

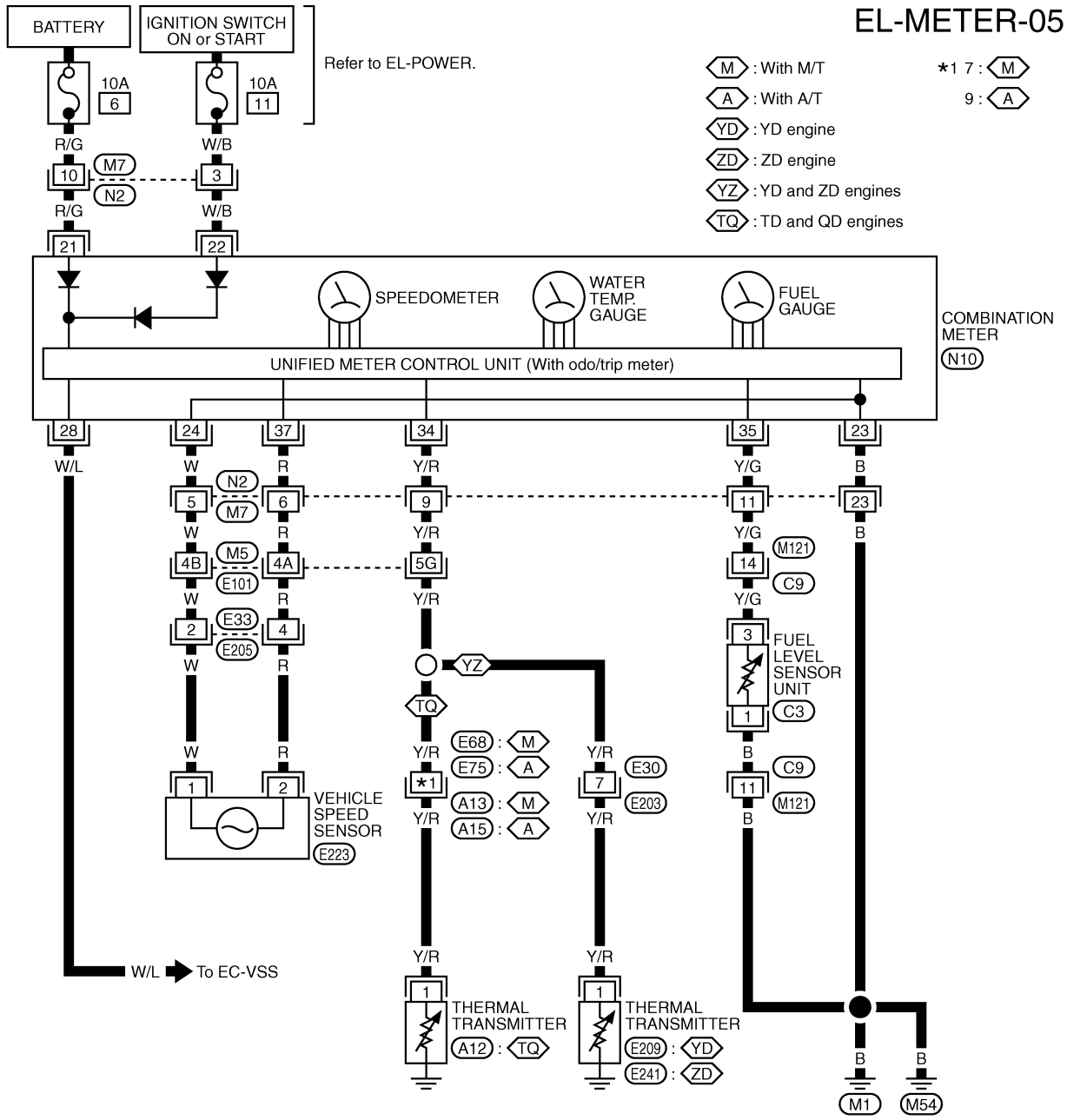

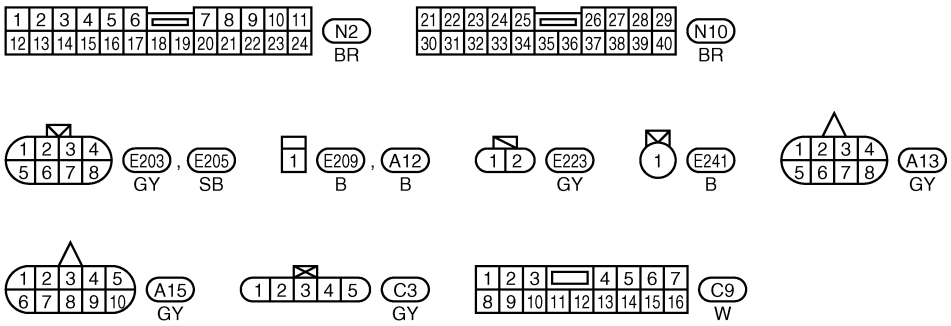

Refer to last page (Foldout page).
M5 , E101

GEL820A

Schematic/With Tachometer

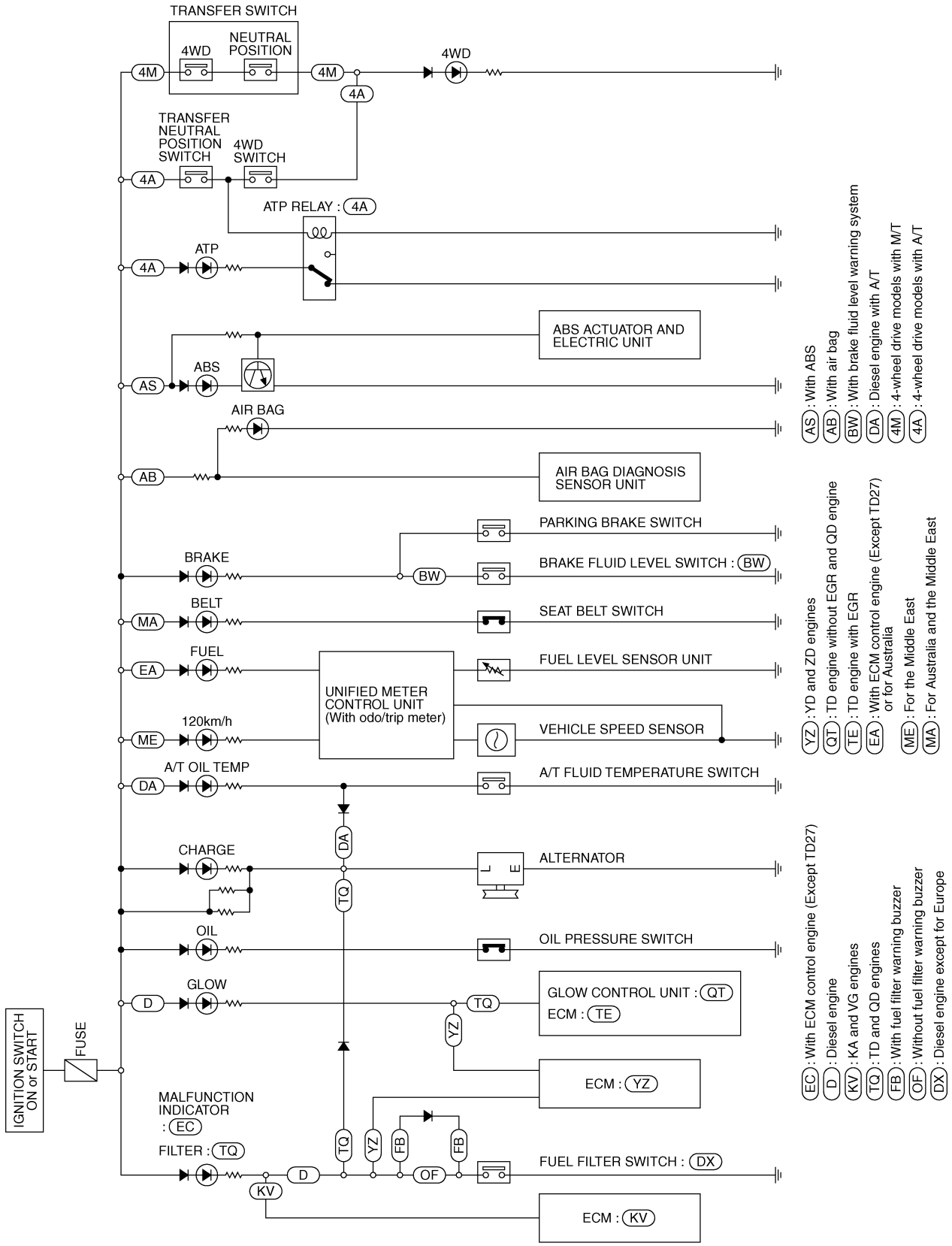

GEL833A

Schematic/Without Tachometer

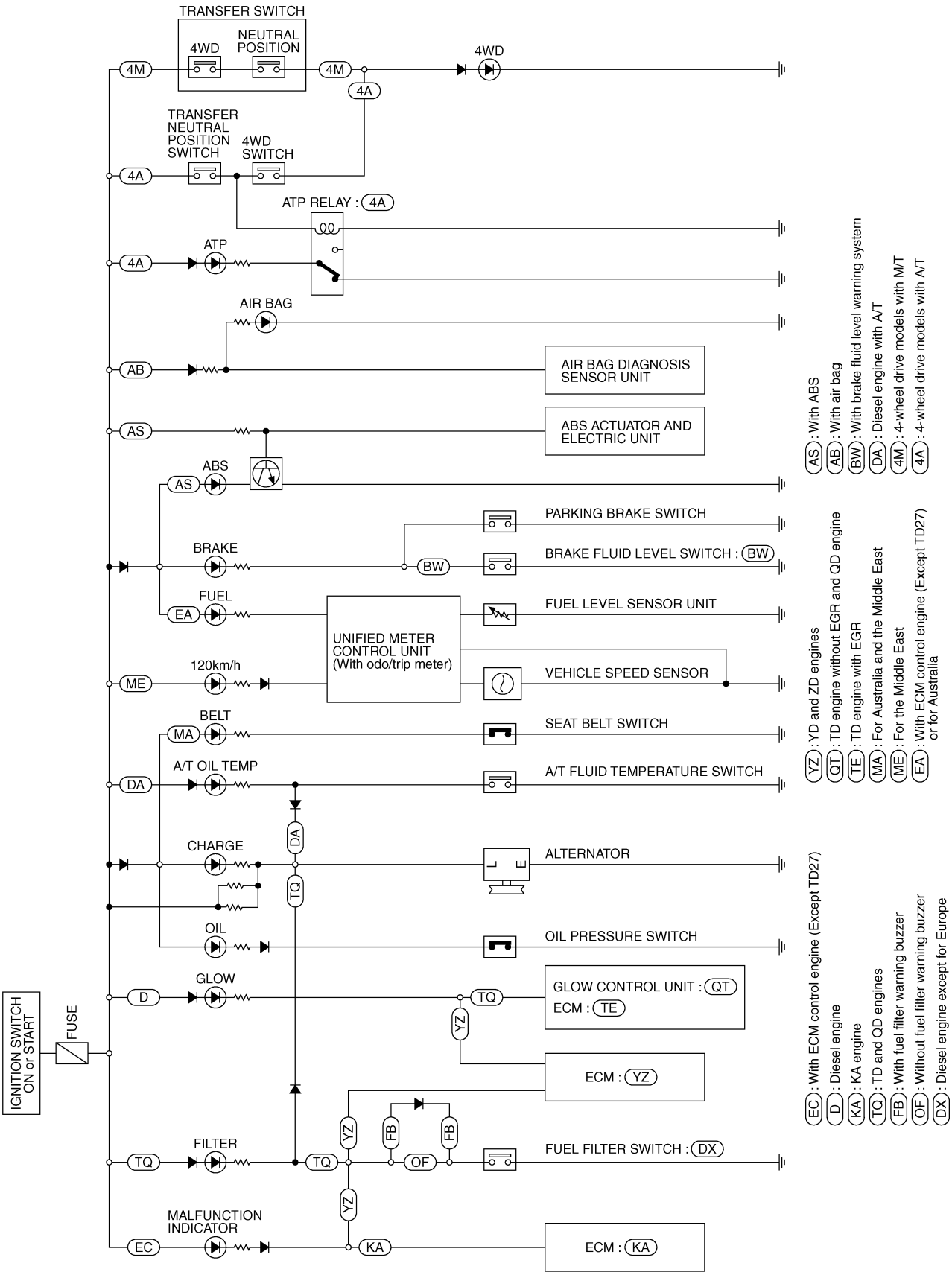

GEL834A

Wiring Diagram — WARN —/Gasoline Engine with Tachometer

EL-WARN-01

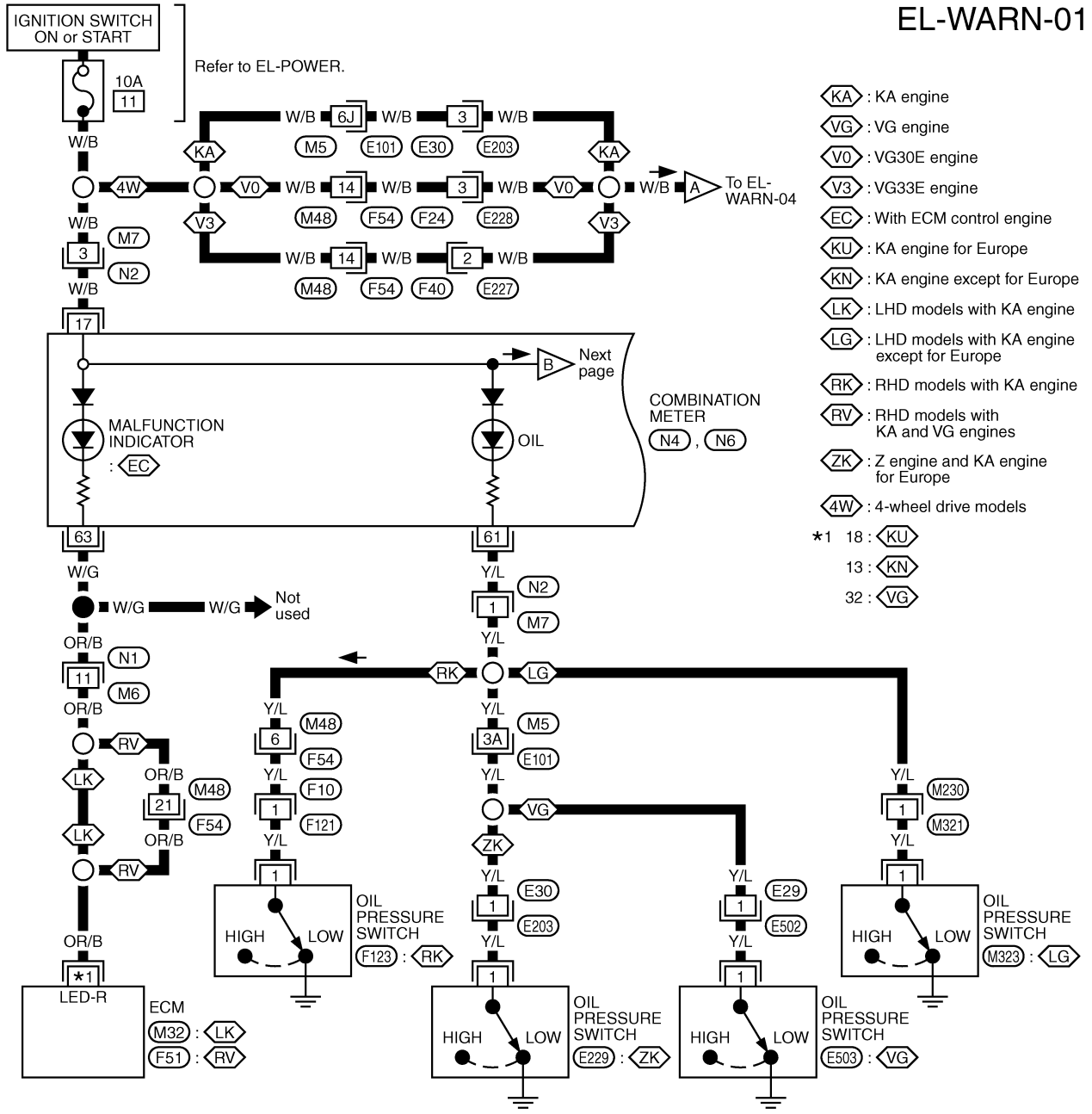

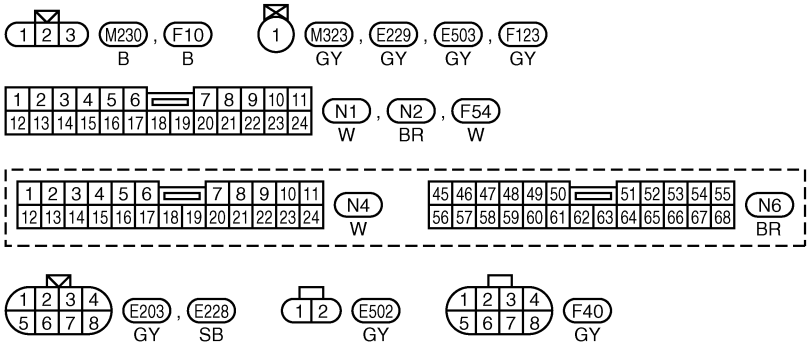

Refer to last page (Foldout page).

M5 , E101

M32

F51

GEL542A

Wiring Diagram — WARN —/Gasoline Engine with Tachometer (Cont'd)

EL-WARN-02

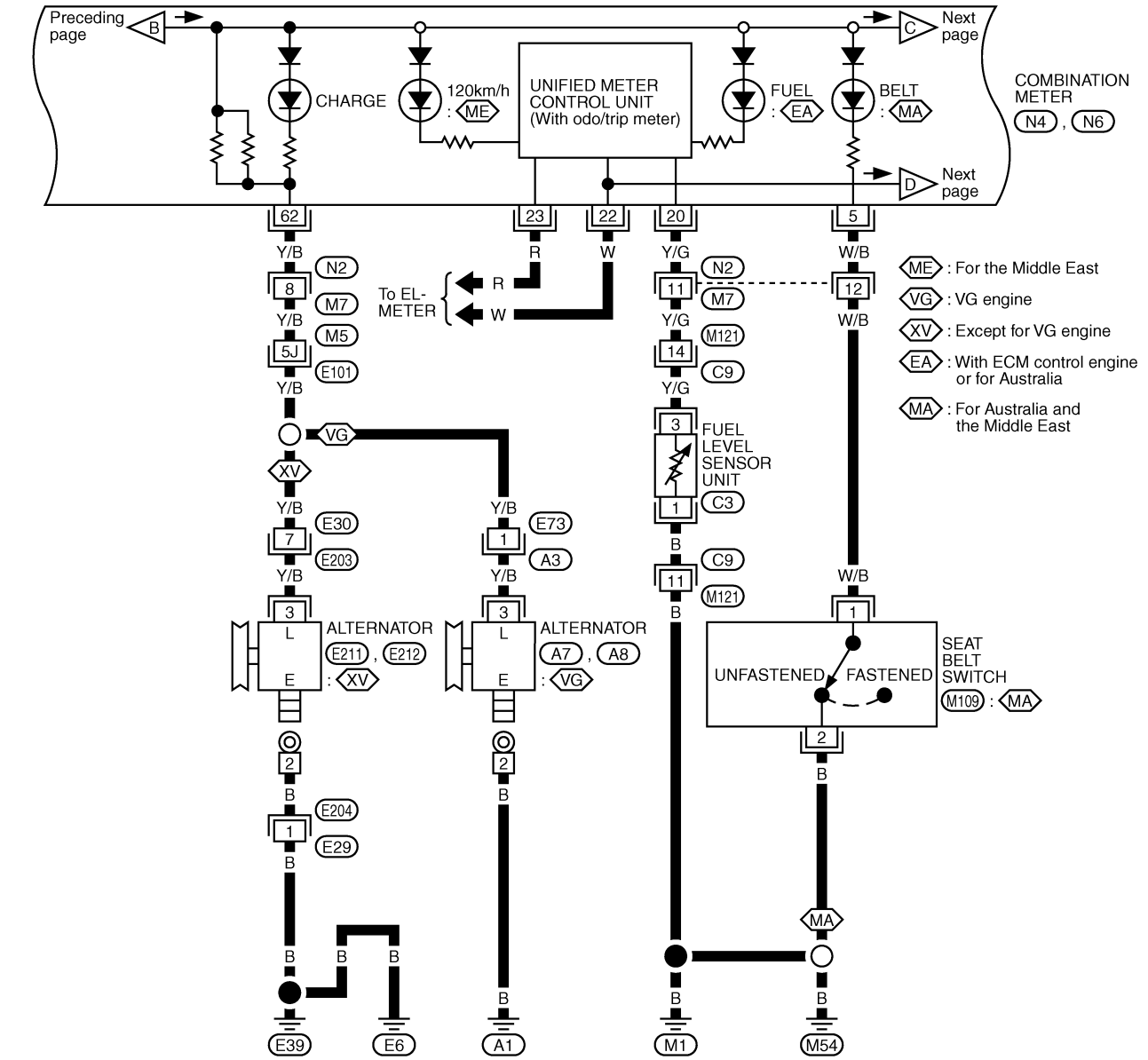

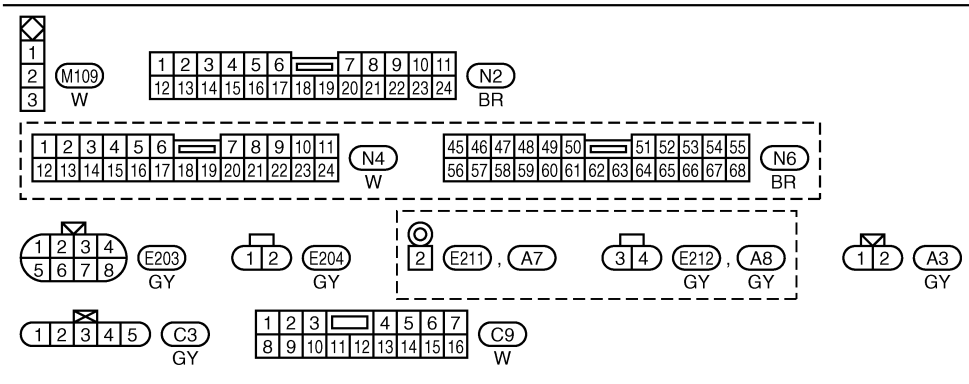

Refer to last page (Foldout page).
M5 , E101

GEL778A

Wiring Diagram — WARN —/Gasoline Engine with Tachometer (Cont'd)

EL-WARN-03

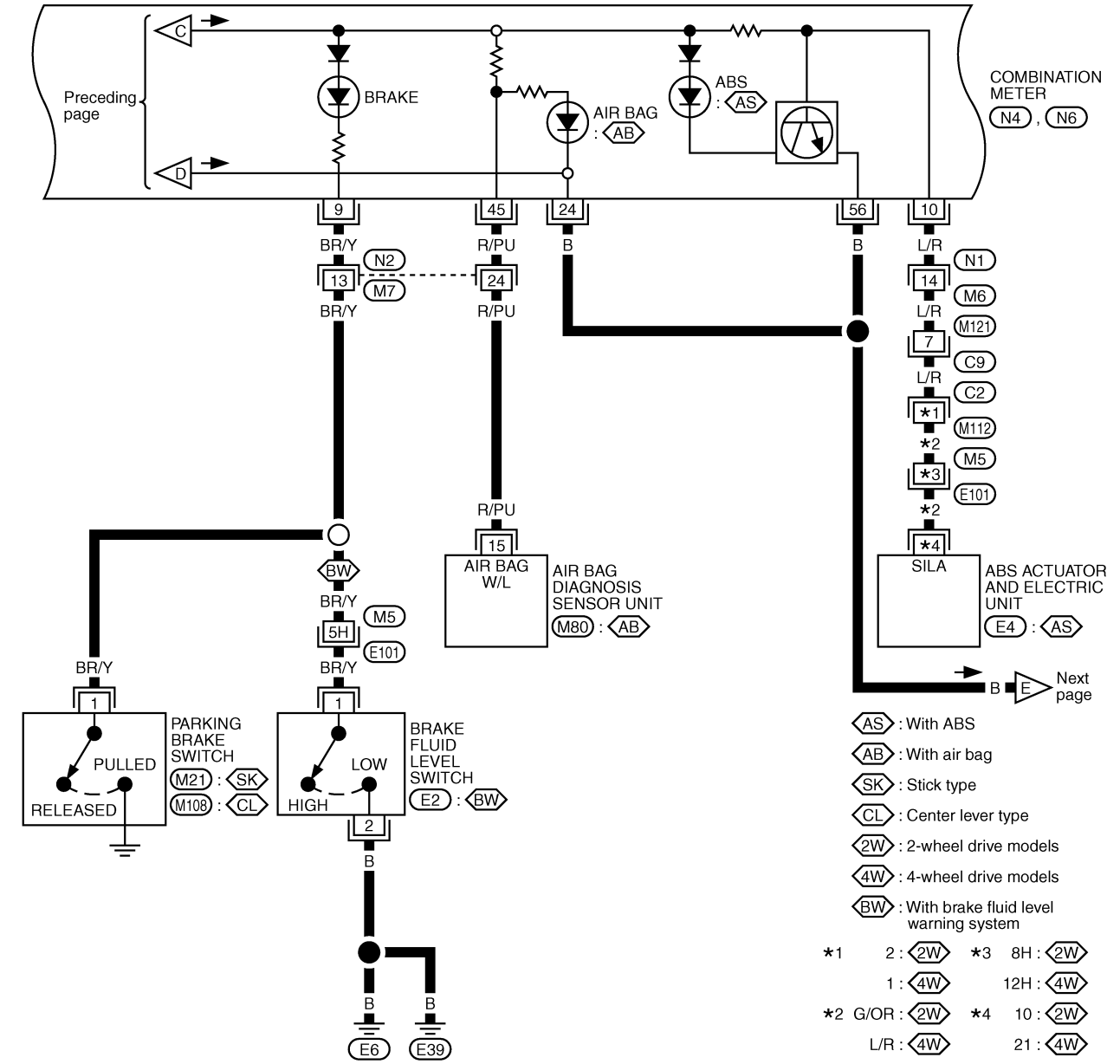

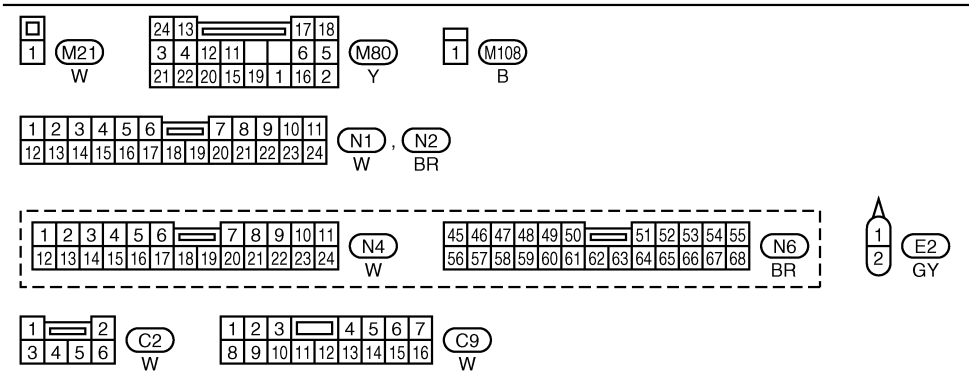

Refer to last page (Foldout page).
M5 , E101
E4

GEL823A

Wiring Diagram — WARN —/Gasoline Engine with Tachometer (Cont'd)

EL-WARN-04

KA : KA engine
V0 : VG30E engine
V3 : VG33E engine
4W : 4-wheel drive models

To EL-WARN-01 A W/B
1
OFF ON 4WD SWITCH
1 E421
2 E422
TRANSFER SWITCH
E221 , E222 : 4W
NEUTRAL OTHERS NEUTRAL POSITION SWITCH
2
Y/B
KA Y/B 4 Y/B 6H Y/B KA Y/B 18 Y/B
E205 E33 E101 M5 M7 N2
V0 Y/B 7 Y/B 4 Y/B V0
V3 E228 F24 F54 M48 V3
Y/B 6 Y/B 4 Y/B
E217 F40
Y/B
1
4WD : 4W
COMBINATION METER
N4
4
B
Preceding page E B
B
N2
23
M7
B
B B
M1 M54

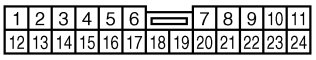

N2 , N4 , F54
BR W W

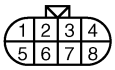

E205 , E228
SB SB

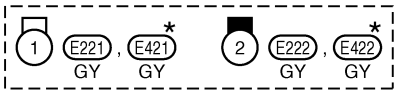

E221 , E421 ★ E222 , E422 ★
GY GY GY GY

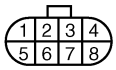

F40
GY

★: This connector is not shown in "HARNESS LAYOUT".

Refer to last page (Foldout page).
M5 , E101

GEL835A

Wiring Diagram — WARN —/Gasoline Engine without Tachometer

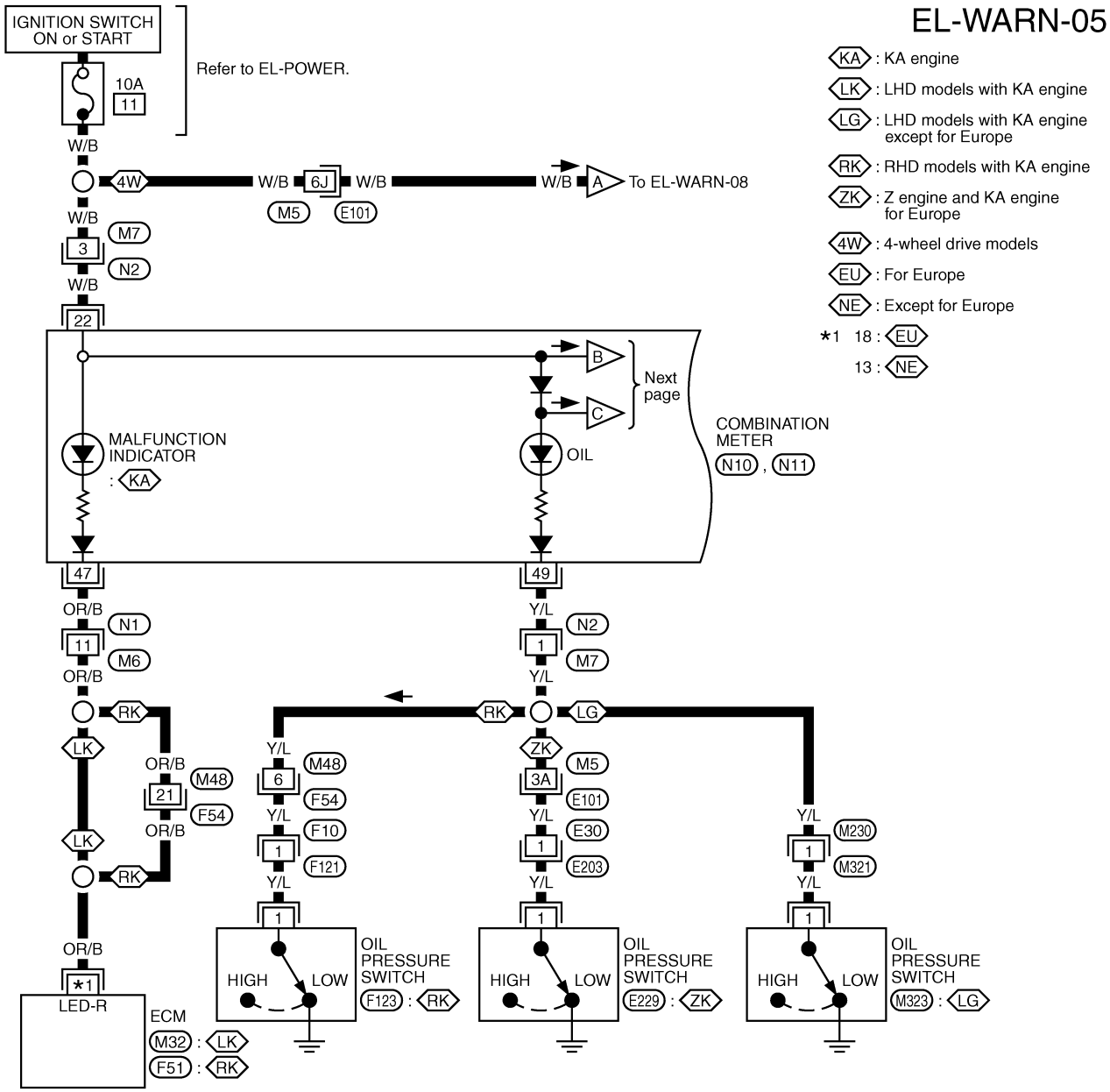

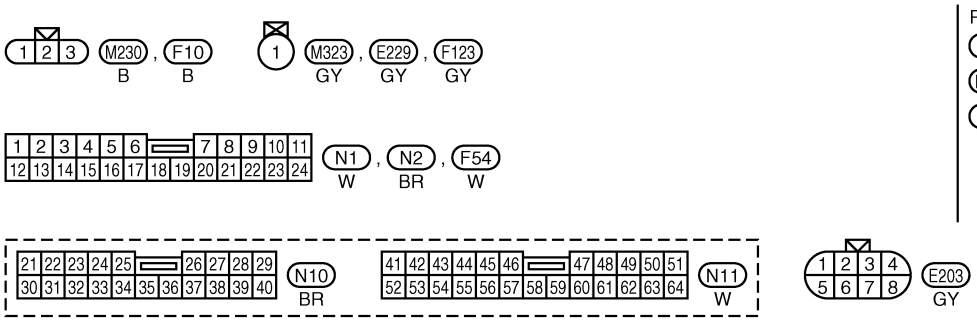

Refer to last page (Foldout page).
M5 , E101
M32
F51

GEL790A

Wiring Diagram — WARN —/Gasoline Engine without Tachometer (Cont'd)

EL-WARN-06

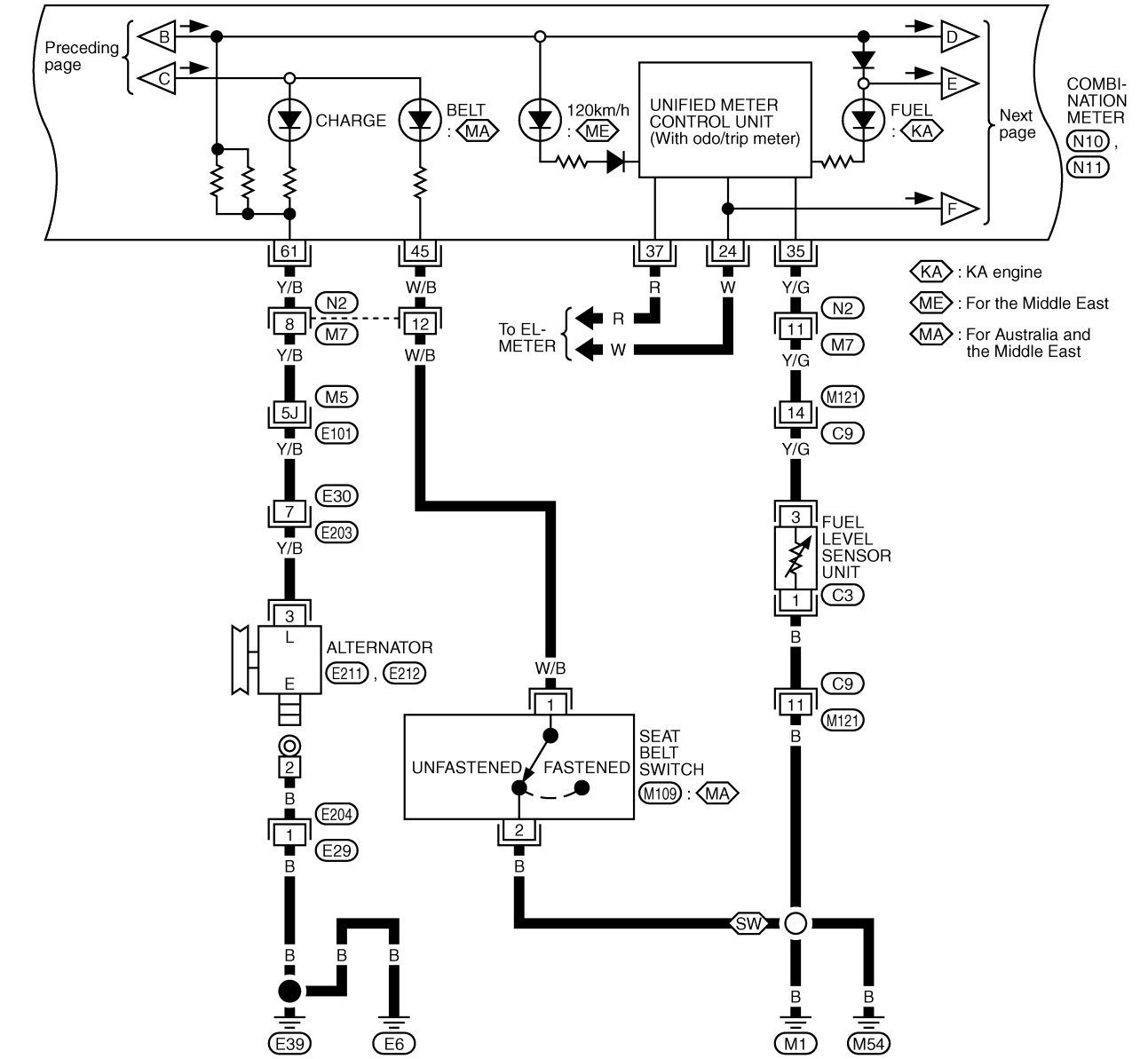

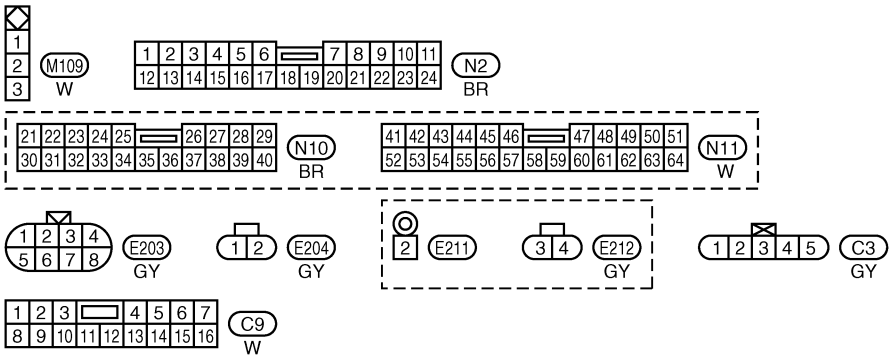

Refer to last page (Foldout page).
M5 , E101

GEL779A

Wiring Diagram — WARN —/Gasoline Engine without Tachometer (Cont'd)

EL-WARN-07

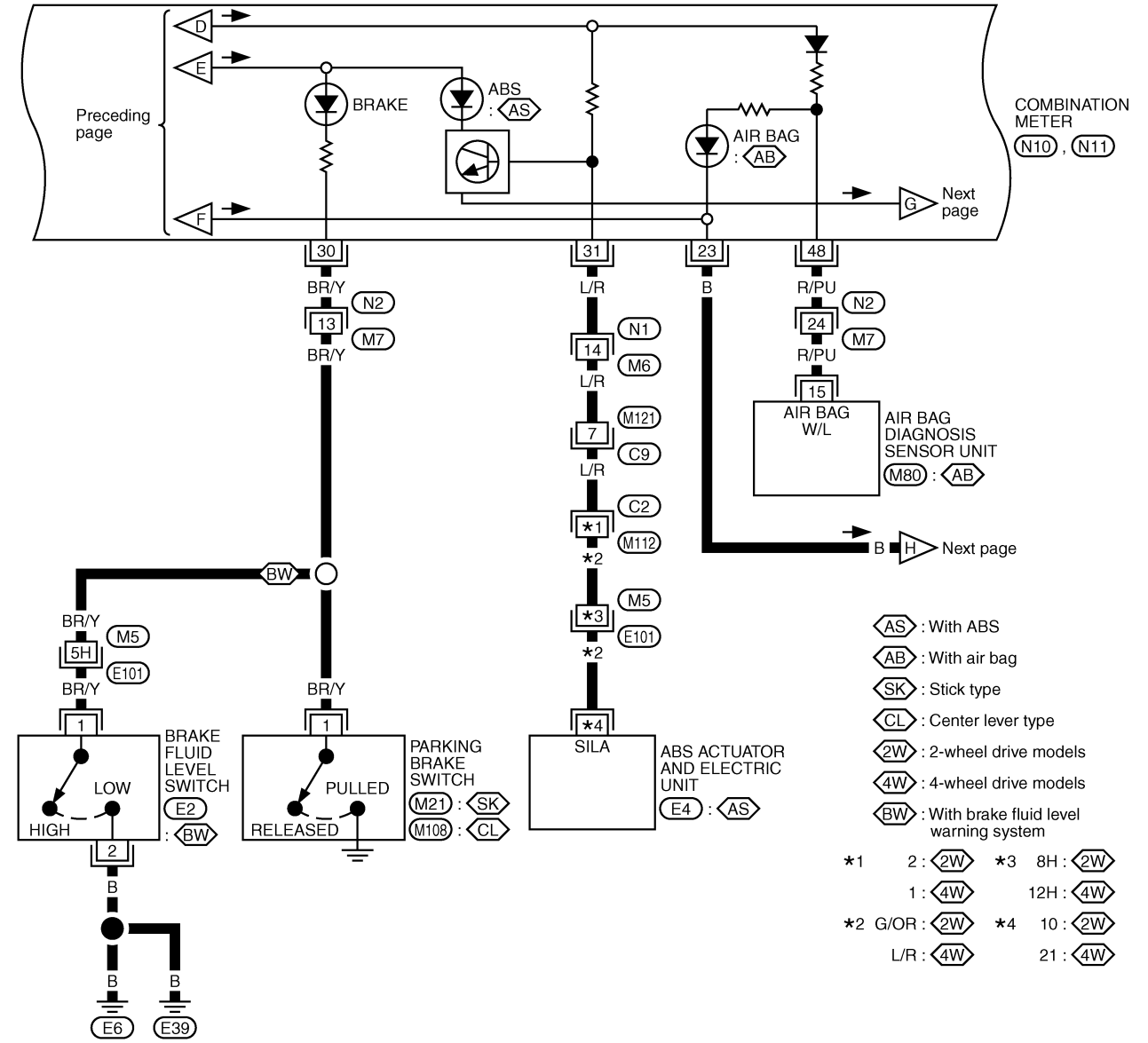

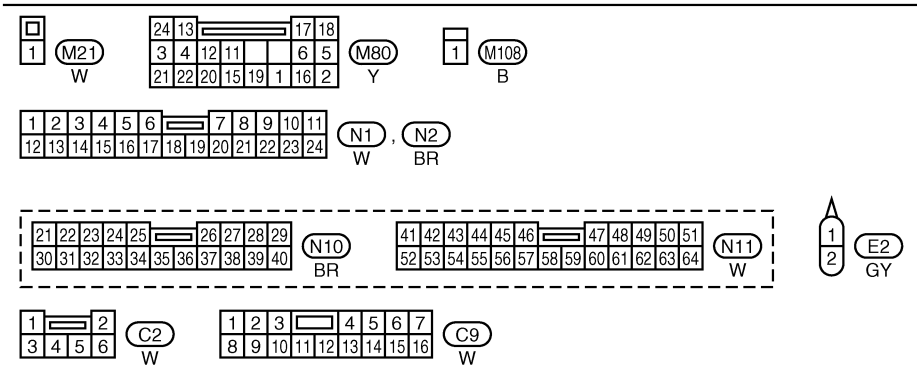

Refer to last page (Foldout page).

M5 , E101

E4

GEL824A

Wiring Diagram — WARN —/Gasoline Engine without Tachometer (Cont'd)

EL-WARN-08

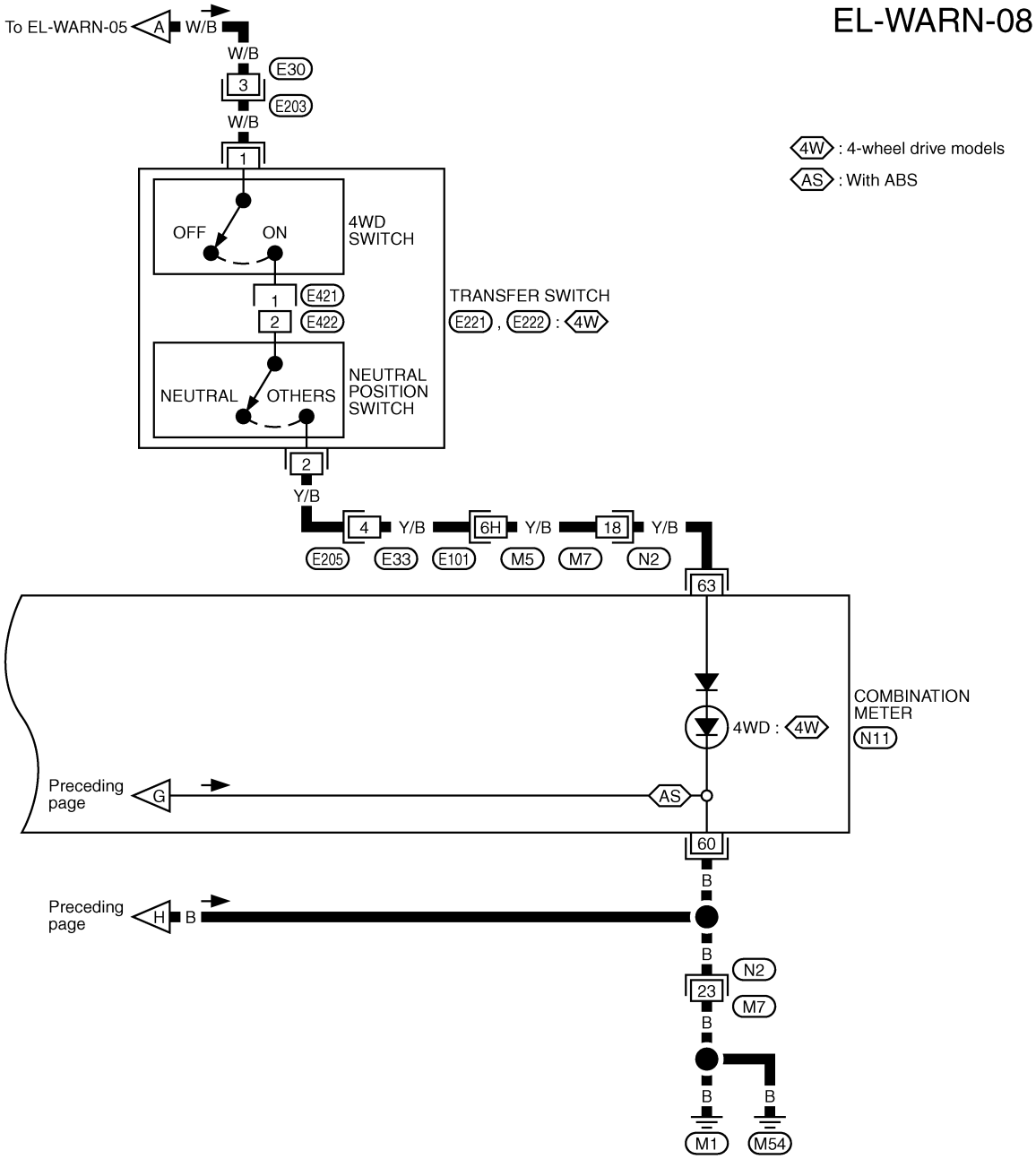

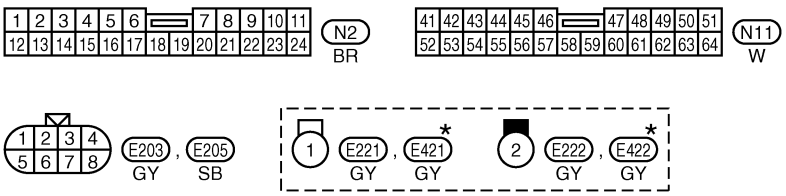

Refer to last page (Foldout page).
M5 , E101

*: This connector is not shown in "HARNESS LAYOUT".

GEL836A

Wiring Diagram — WARN —/Diesel Engine with Tachometer

EL-WARN-09

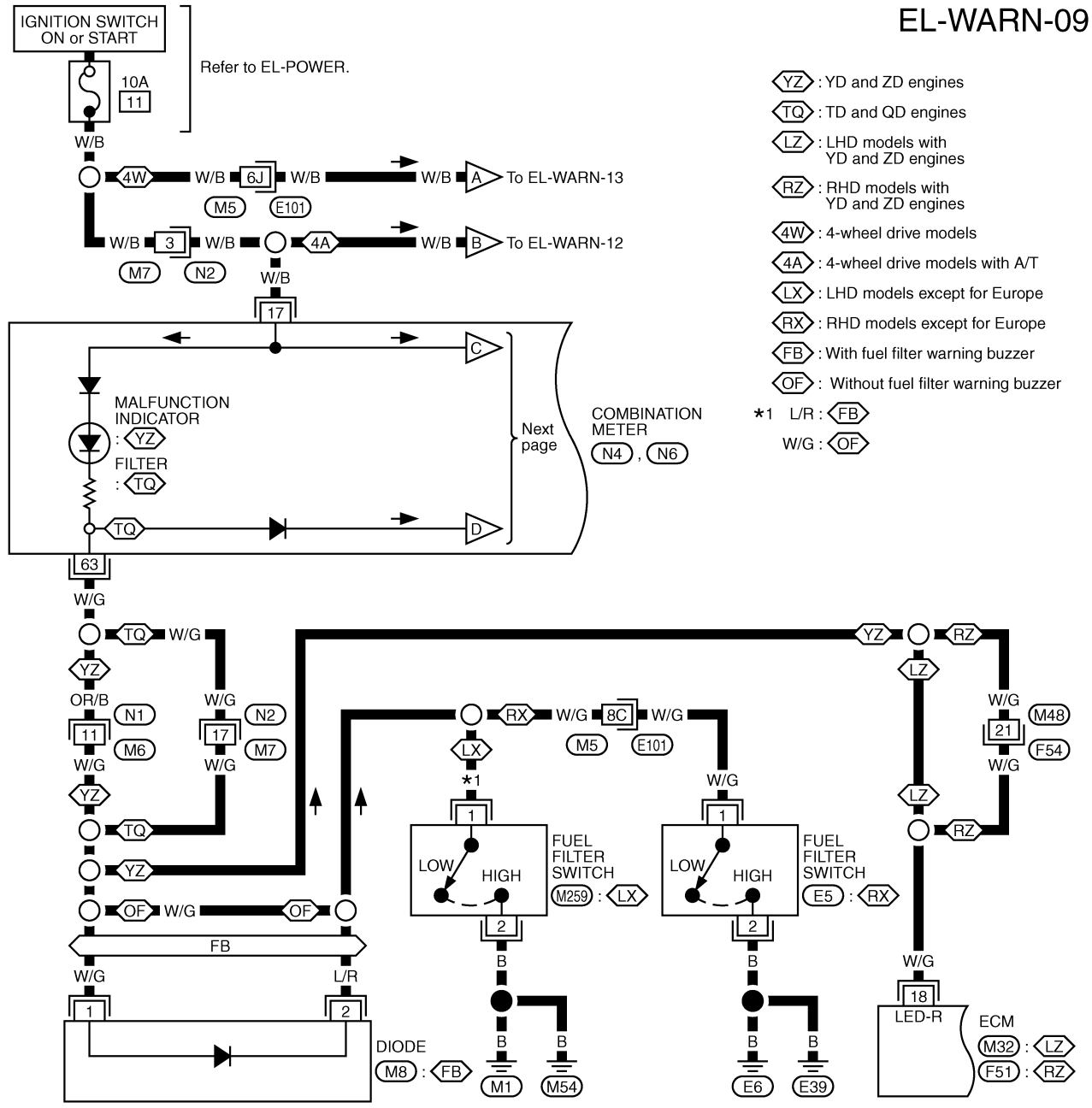

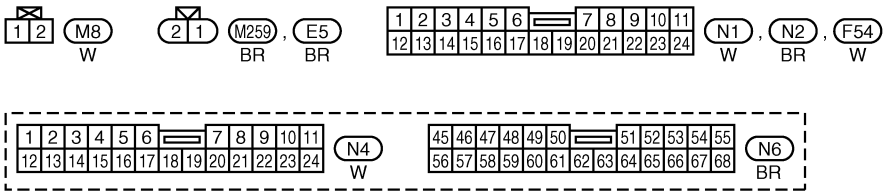

Refer to last page (Foldout page).
M5 , E101
M32
F51

GEL837A

Wiring Diagram — WARN —/Diesel Engine with Tachometer (Cont'd)

EL-WARN-10

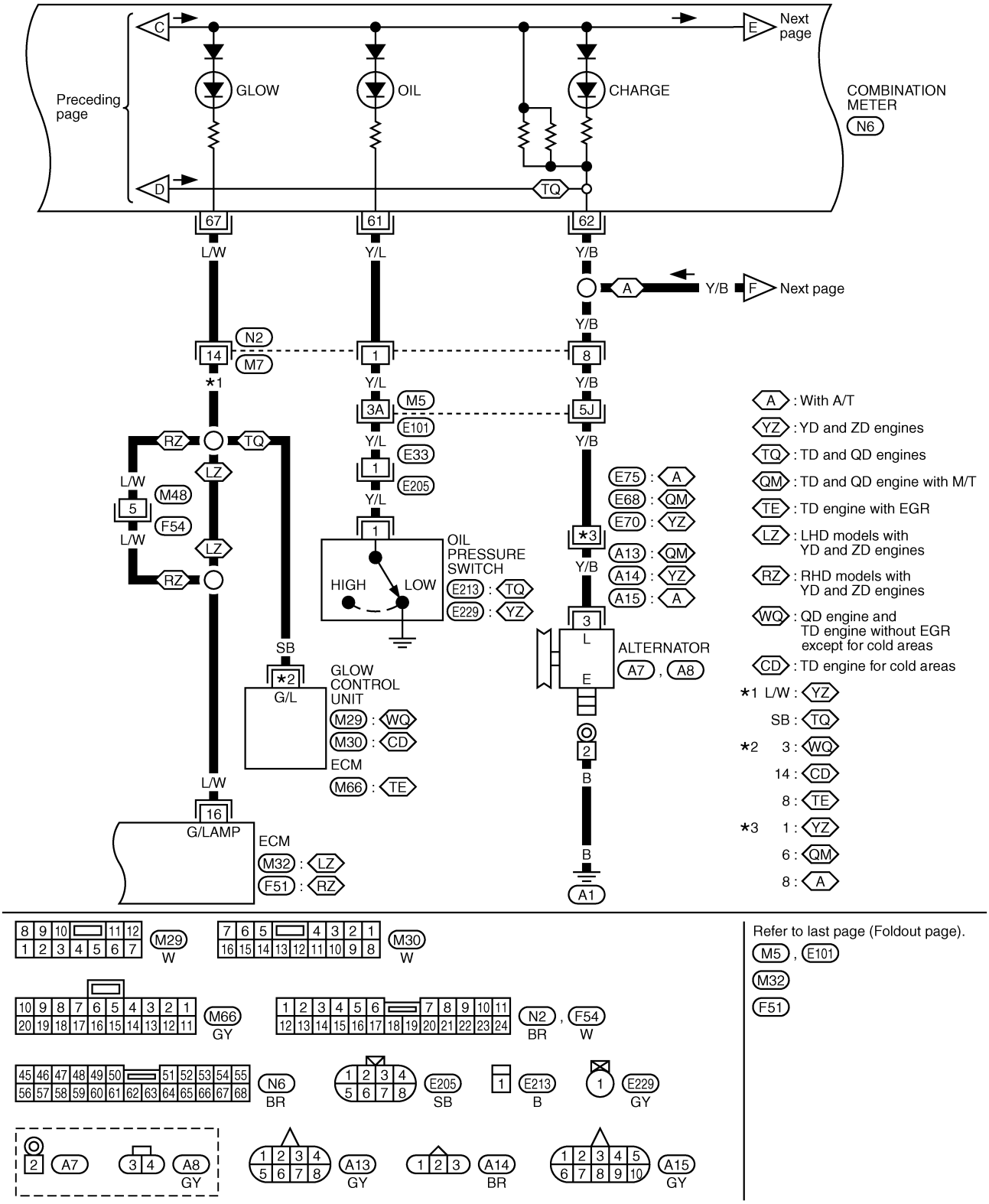

GEL838A

Wiring Diagram — WARN —/Diesel Engine with Tachometer (Cont'd)

EL-WARN-11

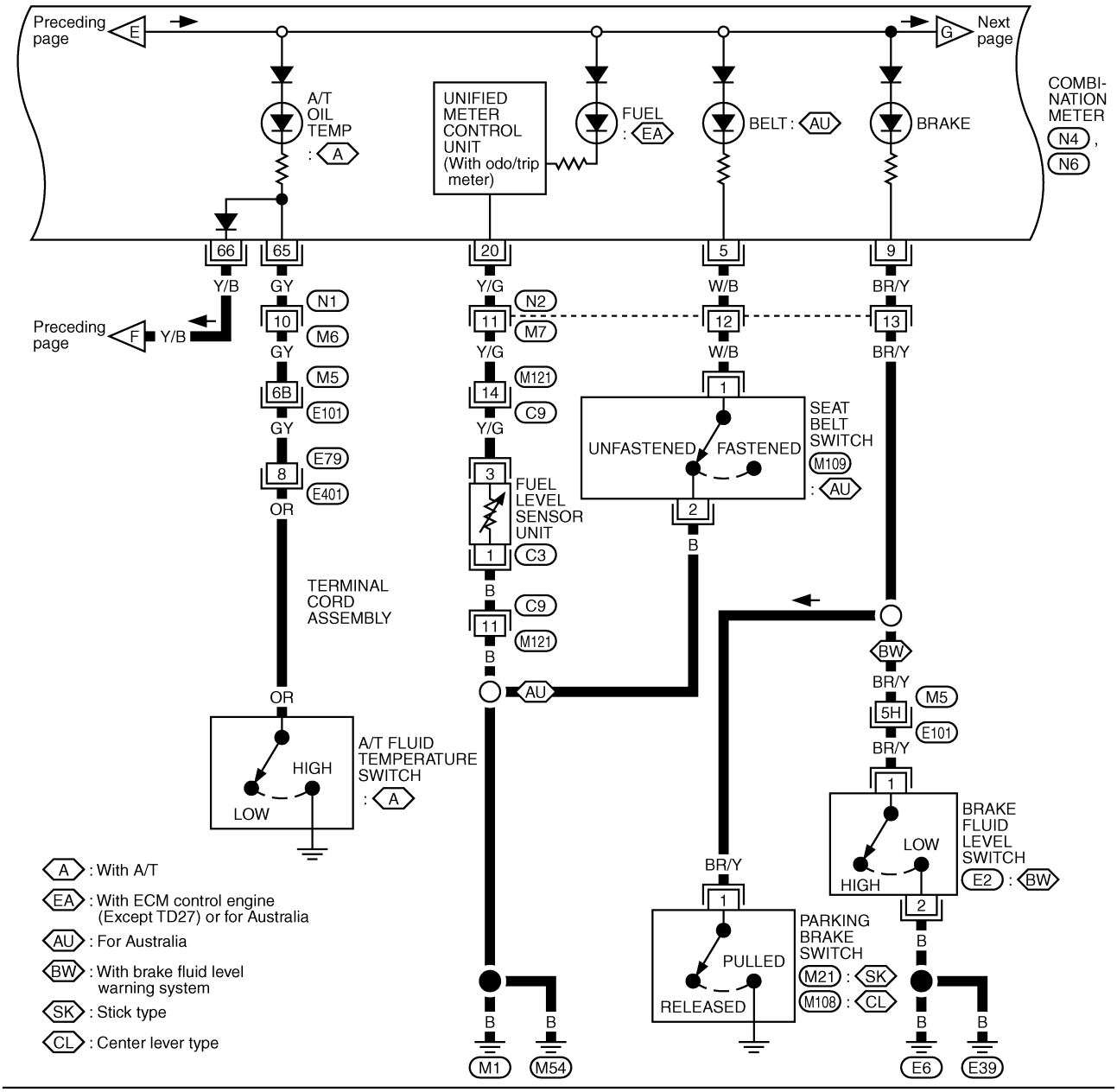

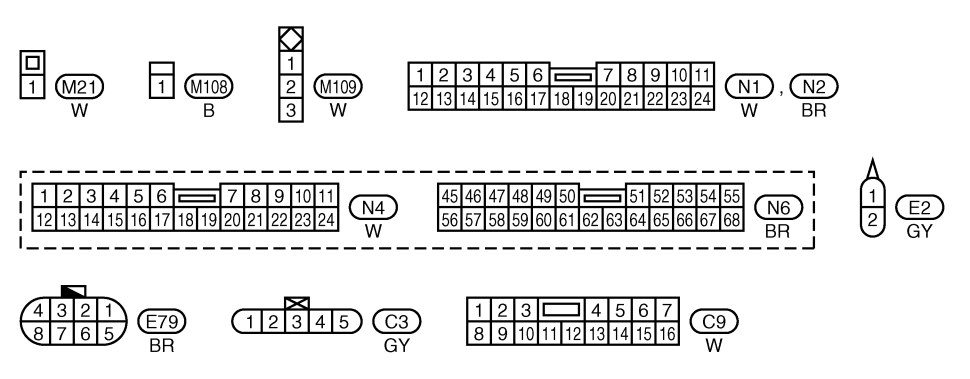

Refer to last page (Foldout page).
M5 , E101

GEL839A

Wiring Diagram — WARN —/Diesel Engine with Tachometer (Cont'd)

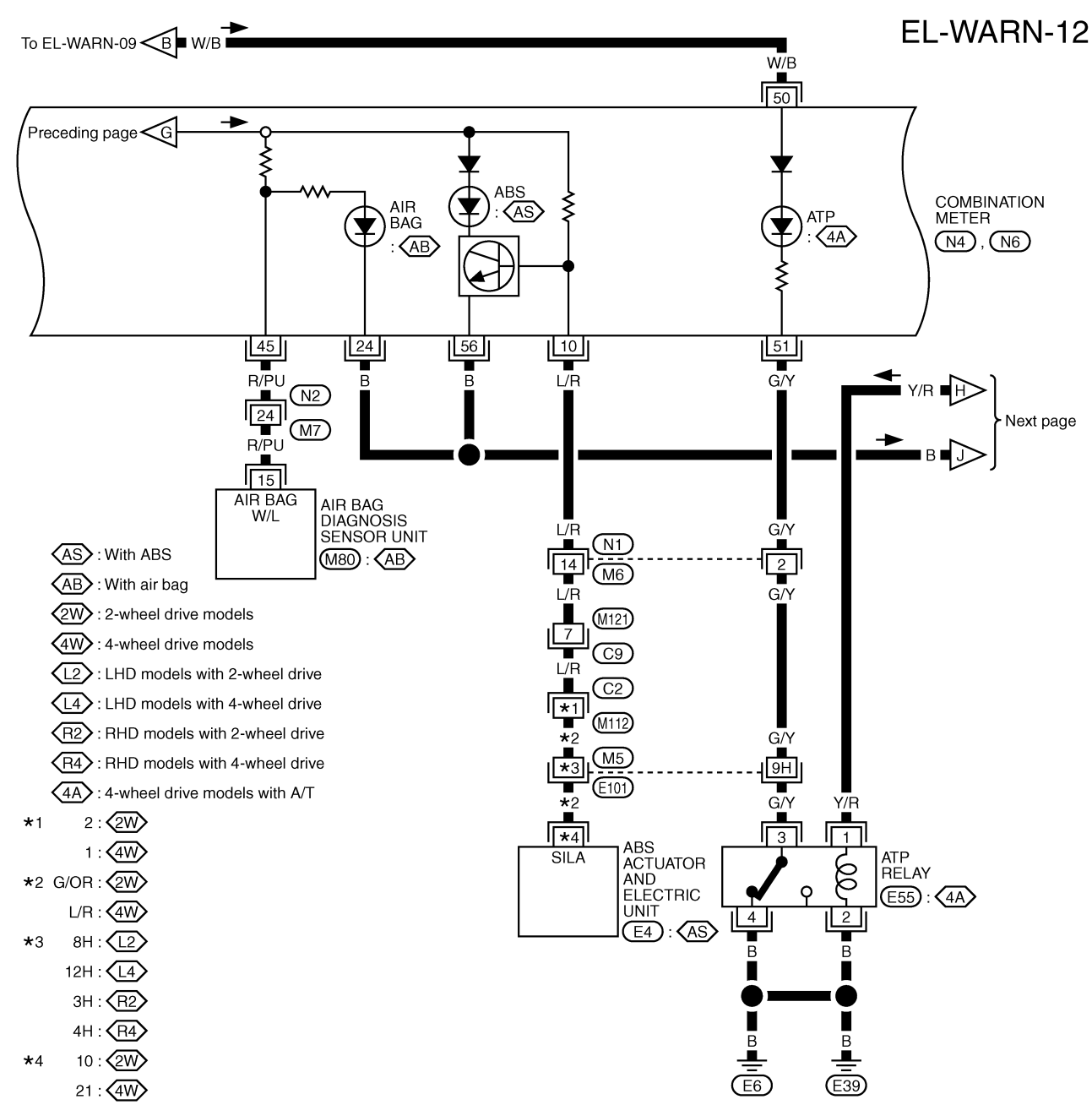

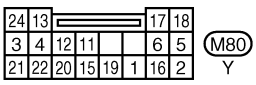

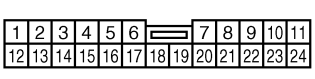

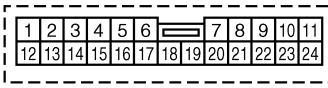

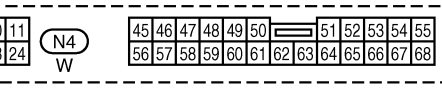

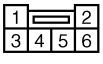

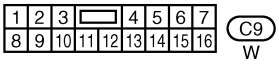

Refer to last page (Foldout page).
M5 , E101
E4

GEL840A

Wiring Diagram — WARN —/Diesel Engine without Tachometer

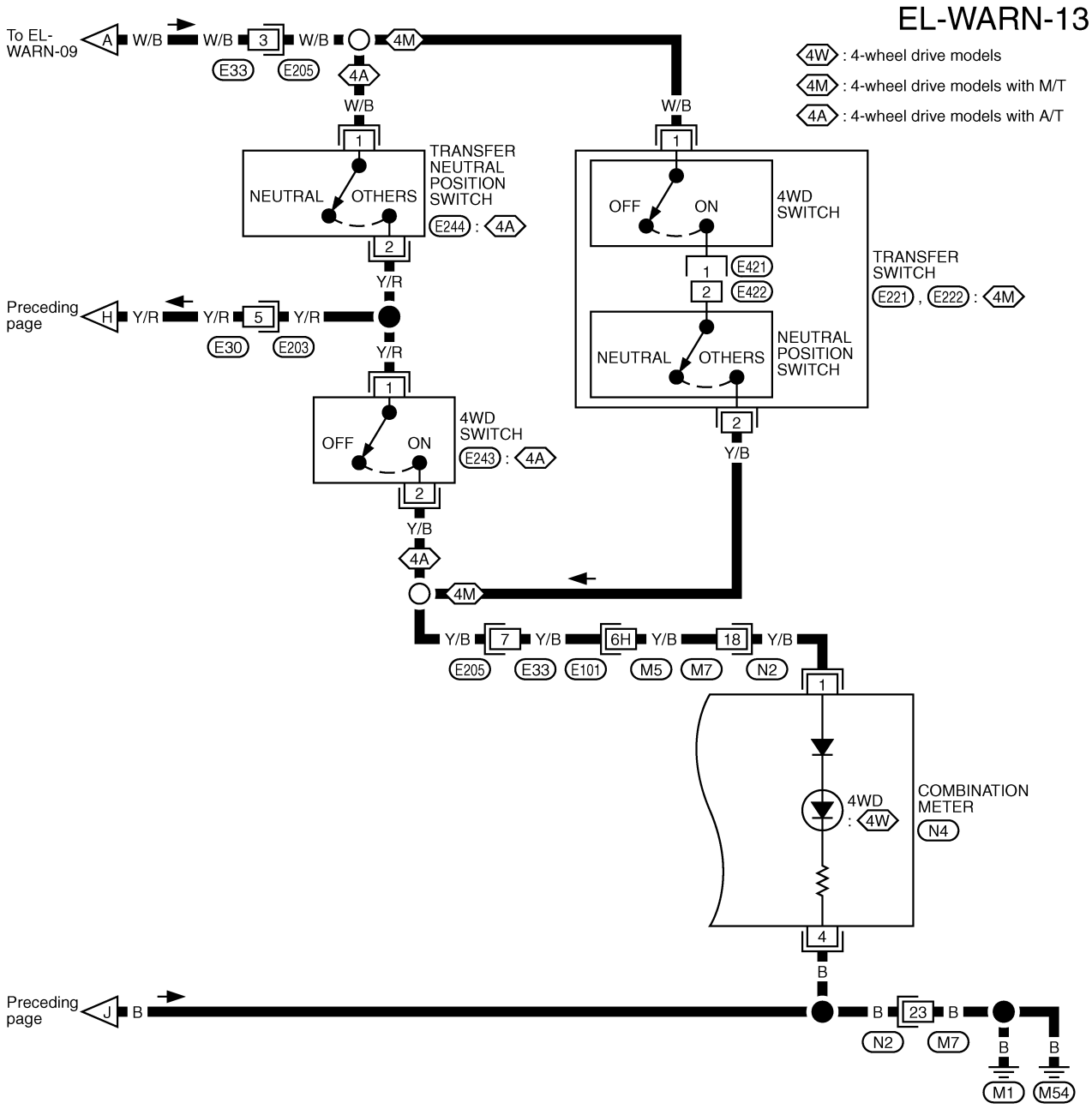

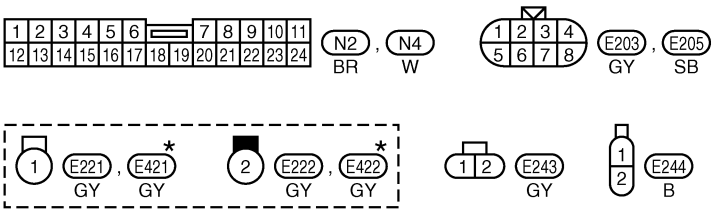

Refer to last page (Foldout page).
M5 , E101

*: This connector is not shown in "HARNESS LAYOUT".

GEL841A

Wiring Diagram — WARN —/Diesel Engine without Tachometer (Cont'd)

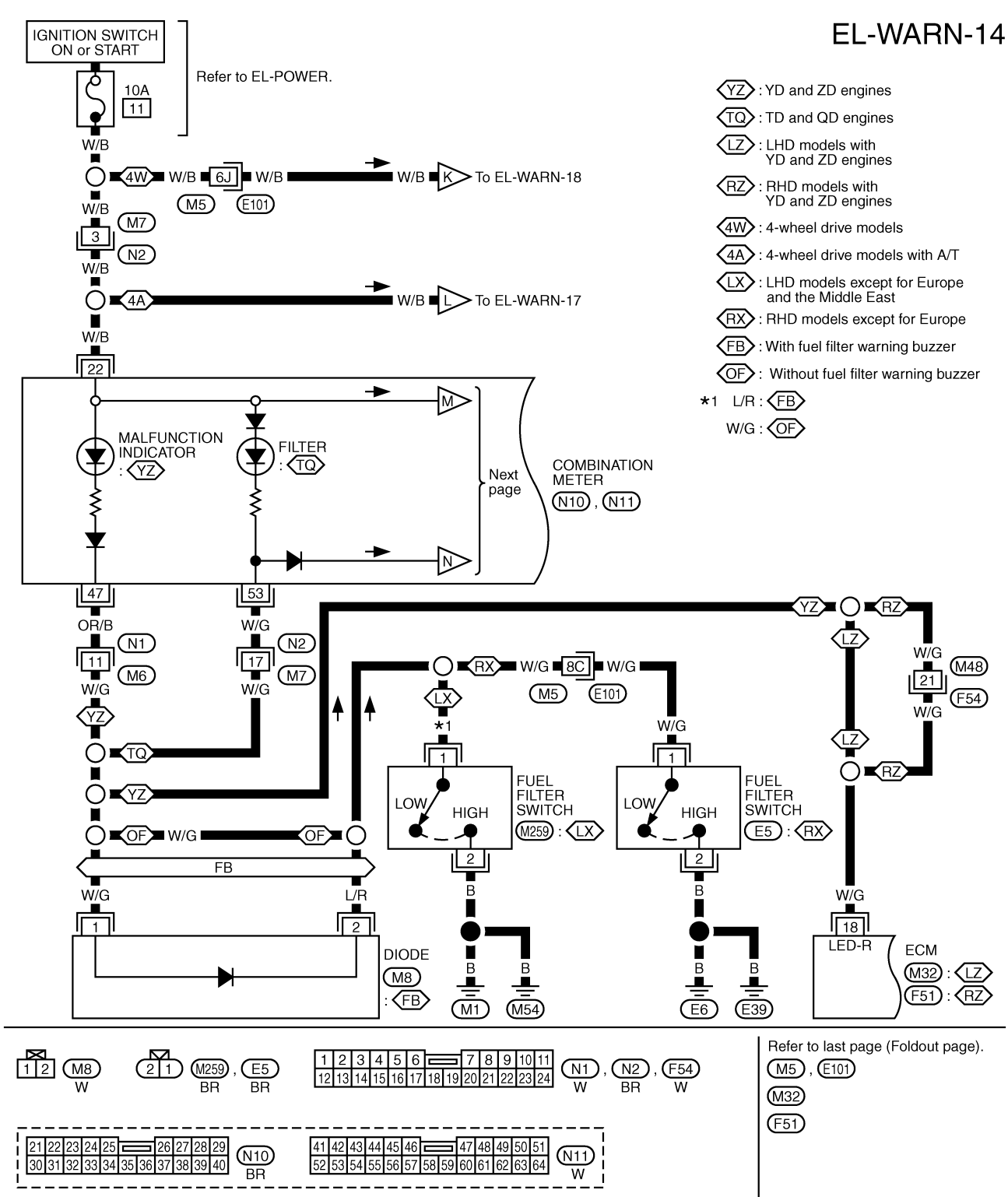

GEL842A

Wiring Diagram — WARN —/Diesel Engine without Tachometer (Cont'd)

EL-WARN-15

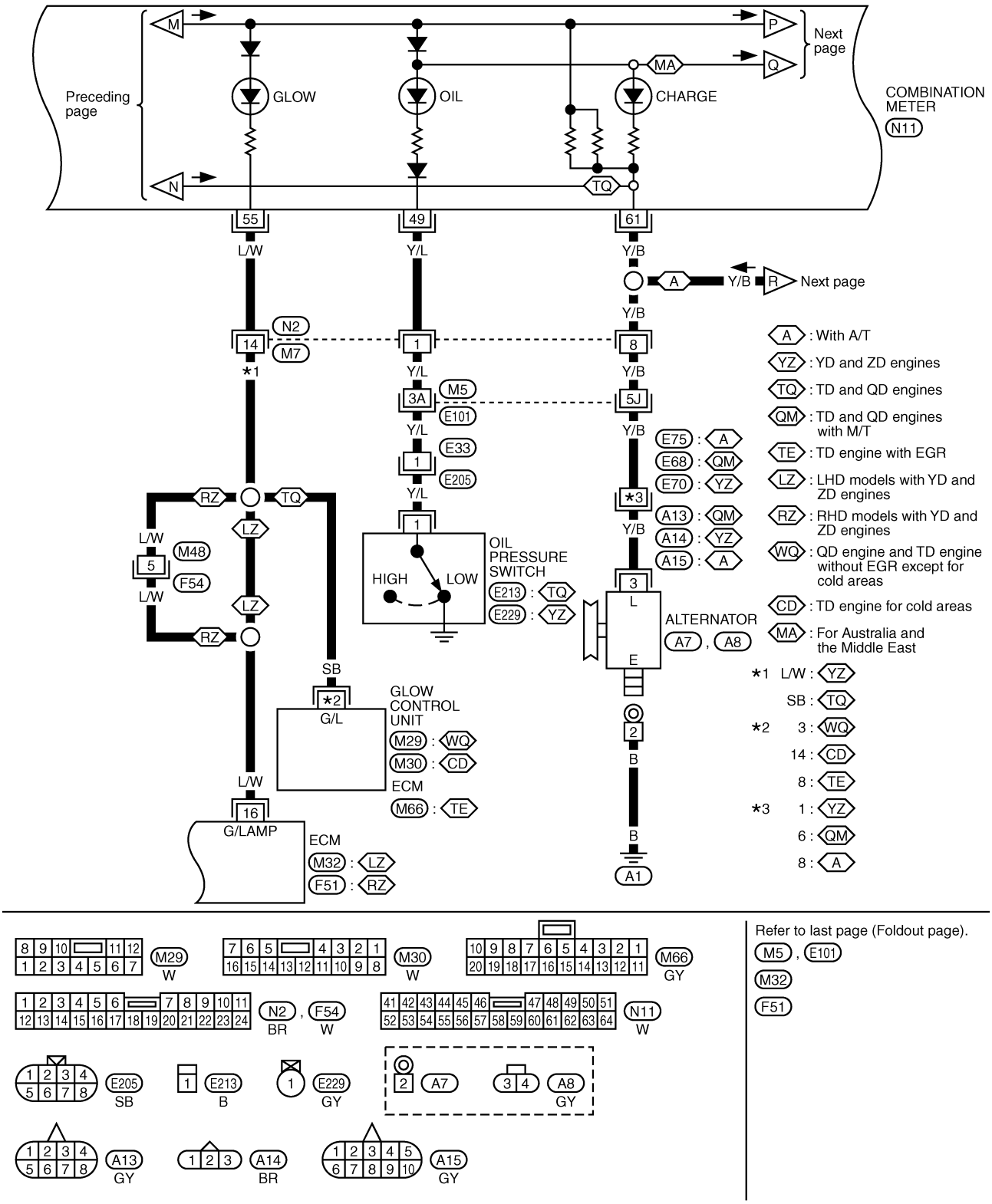

GEL843A

Wiring Diagram — WARN —/Diesel Engine without Tachometer (Cont'd)

EL-WARN-16

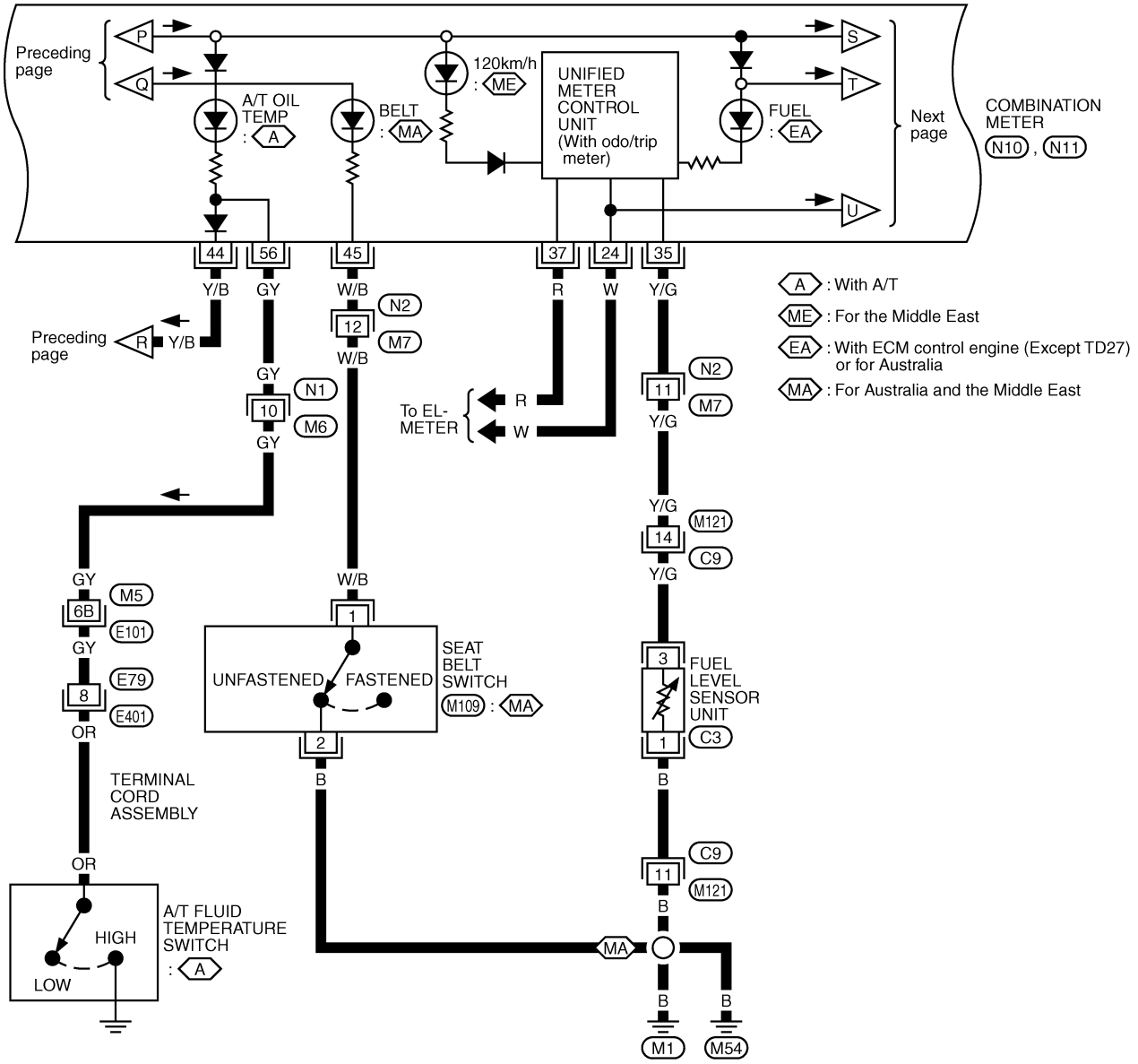

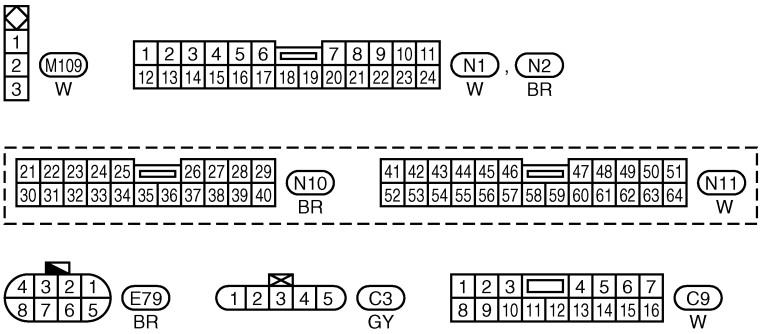

Refer to last page (Foldout page).
M5 , E101

GEL844A

Wiring Diagram — WARN —/Diesel Engine without Tachometer (Cont'd)

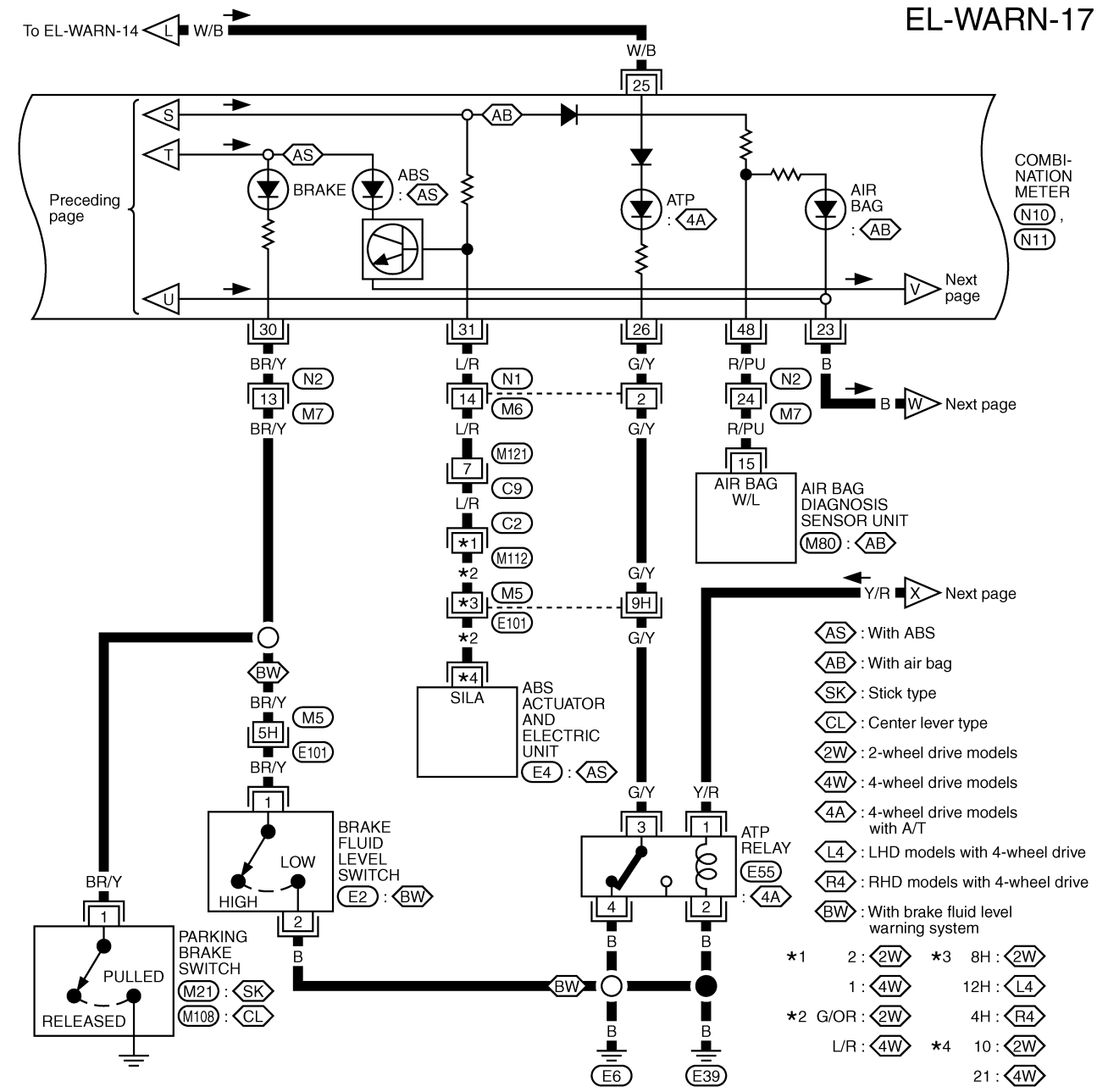

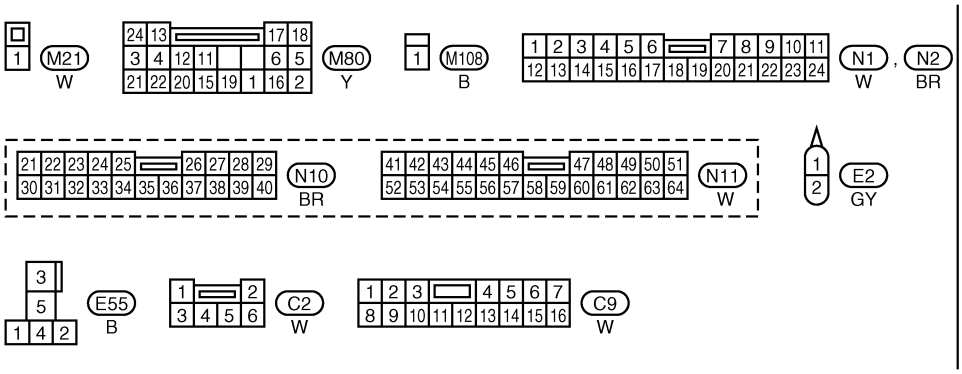

Refer to last page (Foldout page).
M5 , E101
E4

GEL845A

Wiring Diagram — WARN —/Diesel Engine without Tachometer (Cont'd)

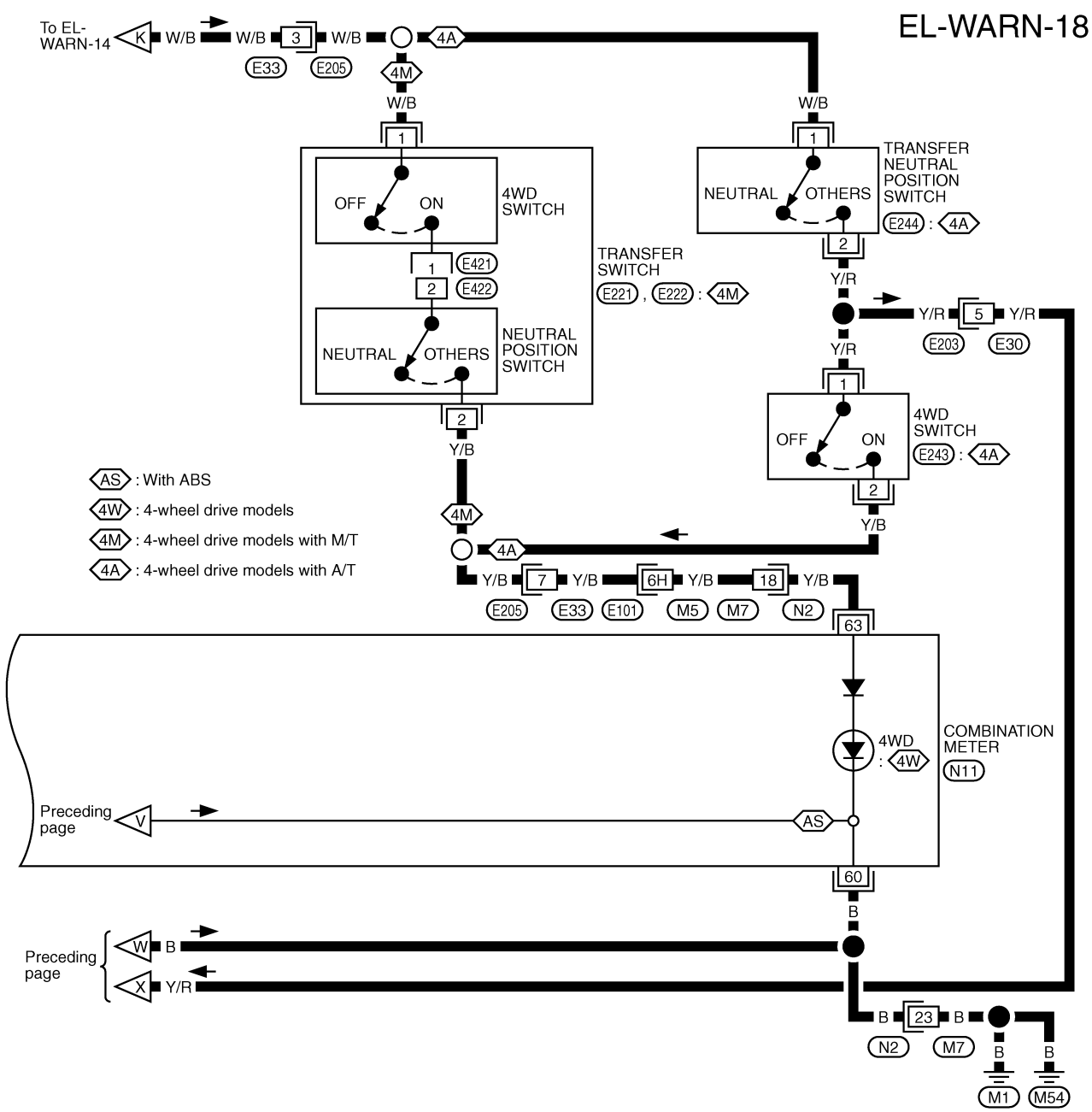

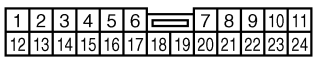

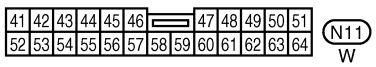

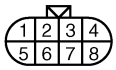

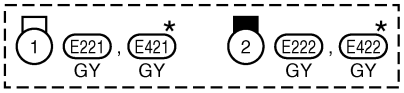

*: This connector is not shown in "HARNESS LAYOUT".

Refer to last page (Foldout page).
M5 , E101

GEL846A

Wiring Diagram — CHIME —/LHD Models for Europe

LIGHT WARNING BUZZER

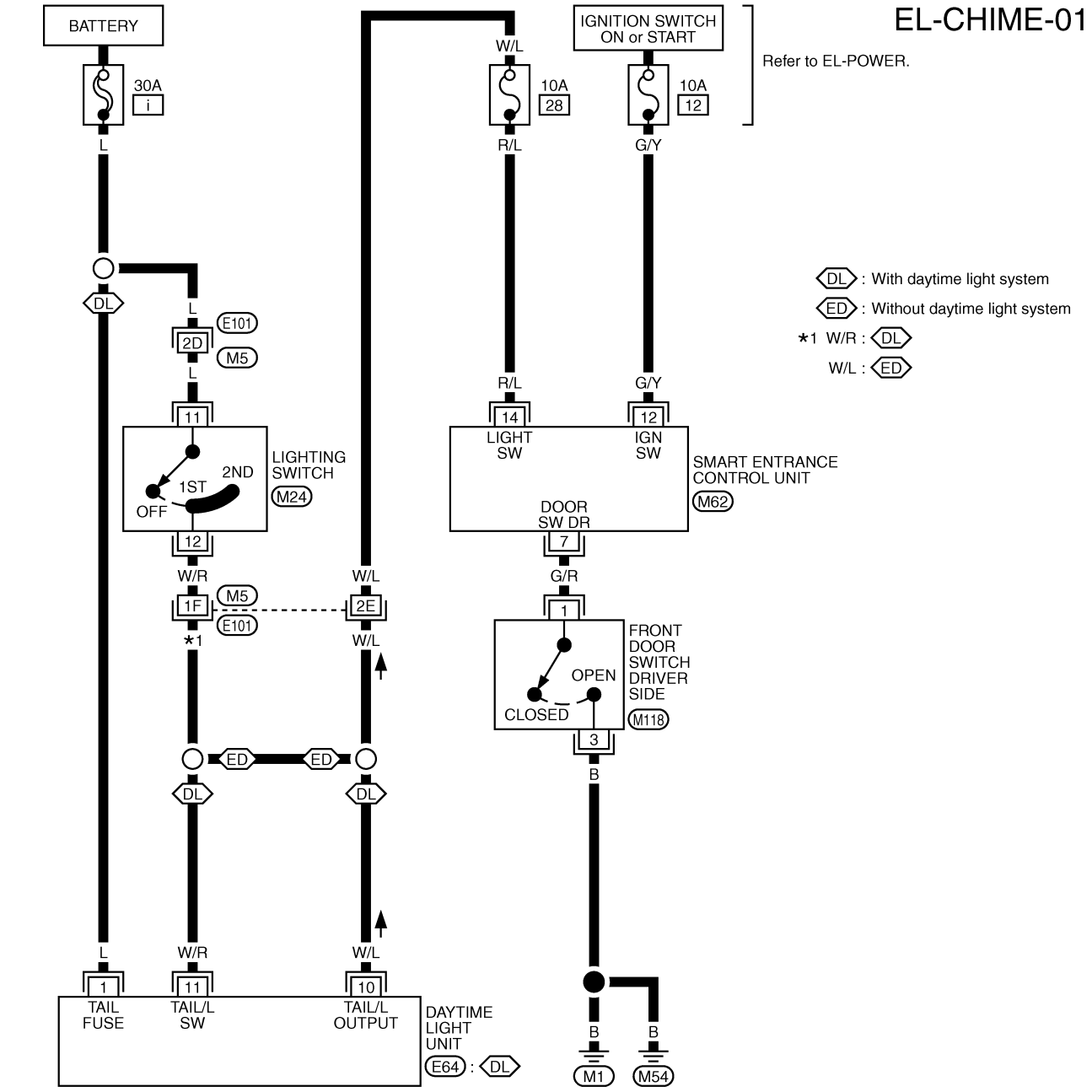

Refer to last page (Foldout page).
M5 , E101

GEL678A

Wiring Diagram — AUDIO —/LHD Models Except for Europe

WITH 2 OR 4 SPEAKERS

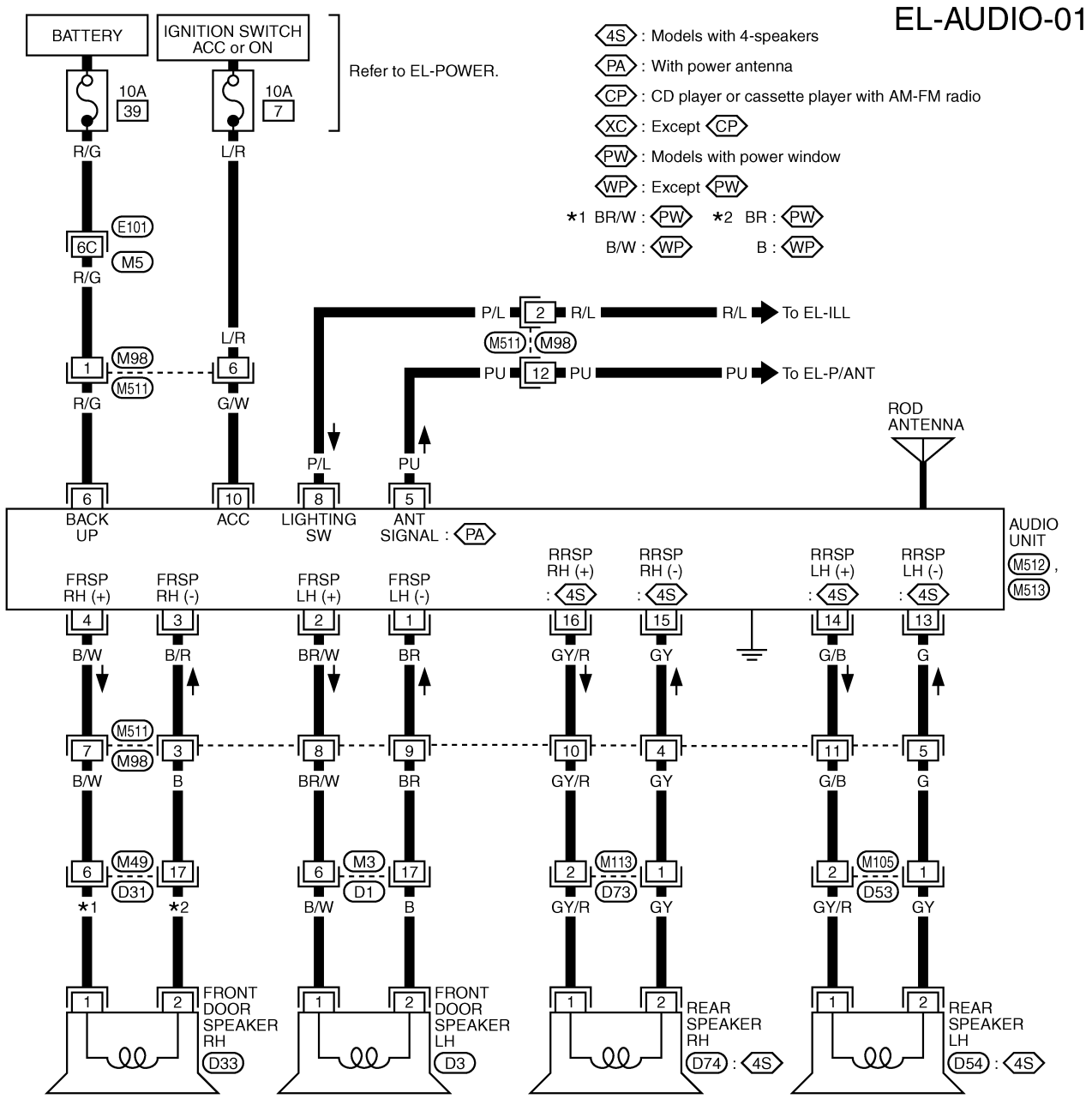

GEL679A

Wiring Diagram — AUDIO —/LHD Models for Europe

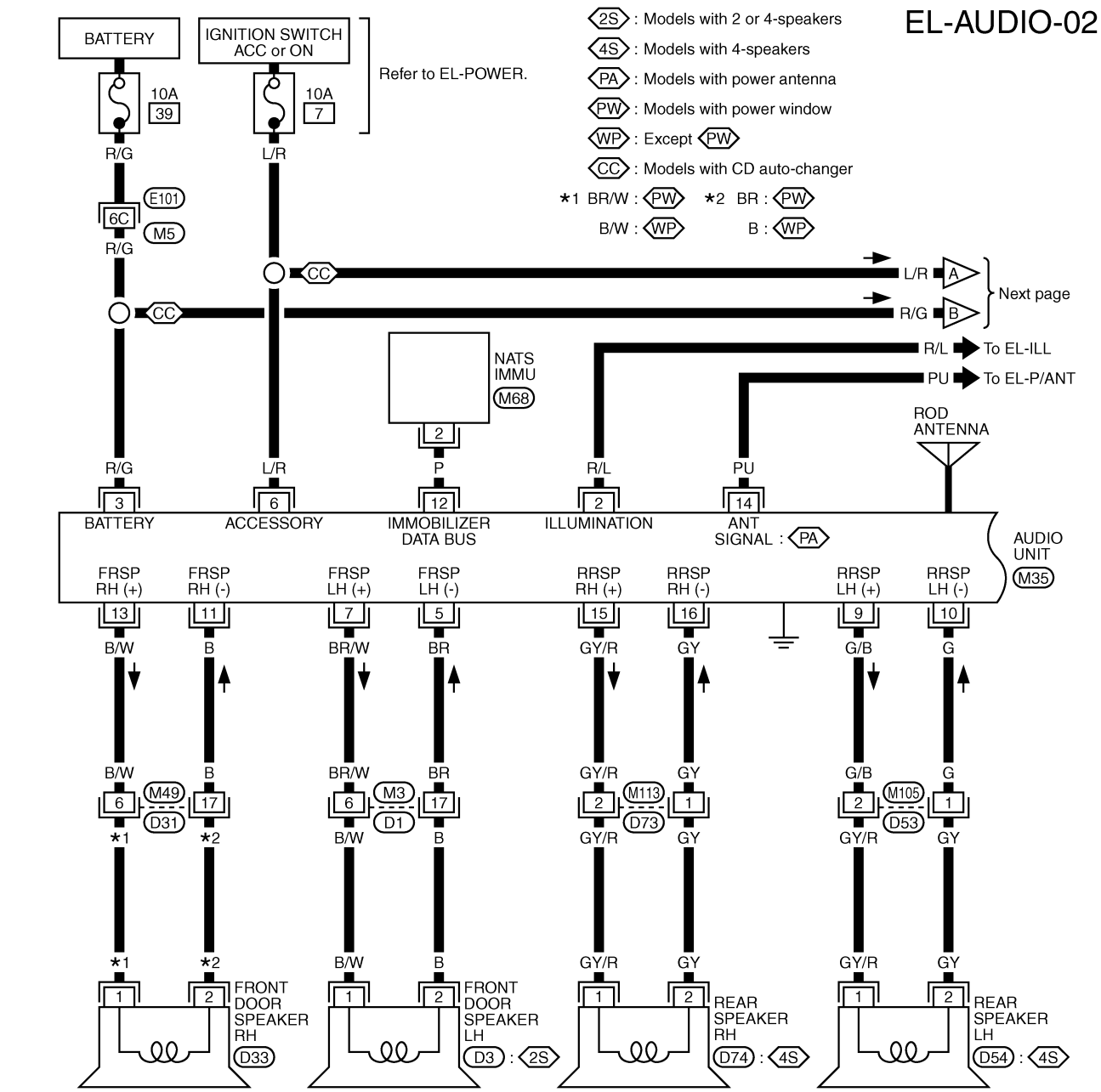

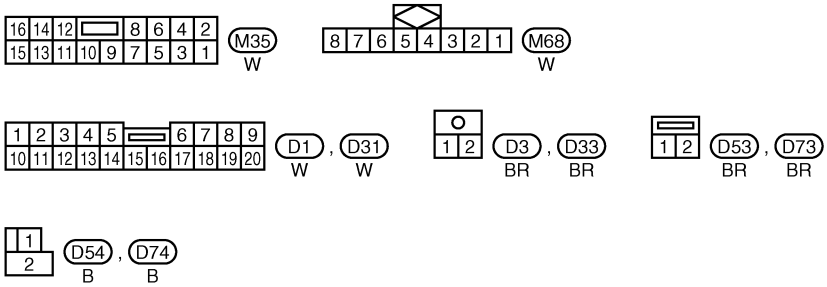

Refer to last page (Foldout page).
M5 , E101

GEL680A

Wiring Diagram — AUDIO —/LHD Models for Europe (Cont'd)

EL-AUDIO-03

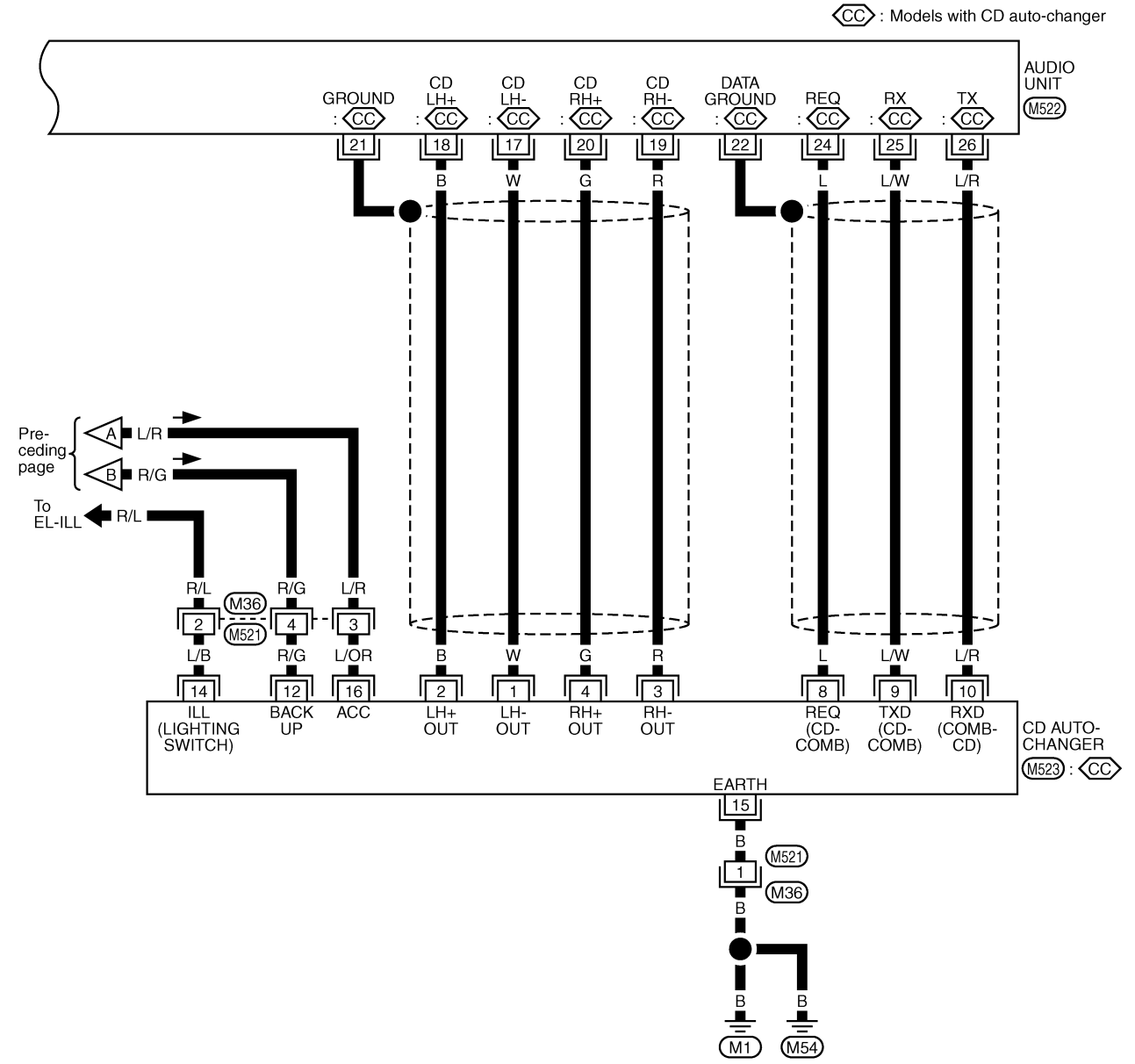

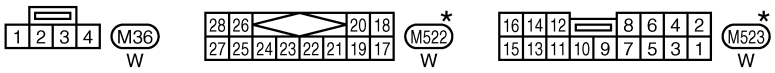

*: This connector is not shown in "HARNESS LAYOUT".

GEL681A

Wiring Diagram — AUDIO —/RHD Models for Europe

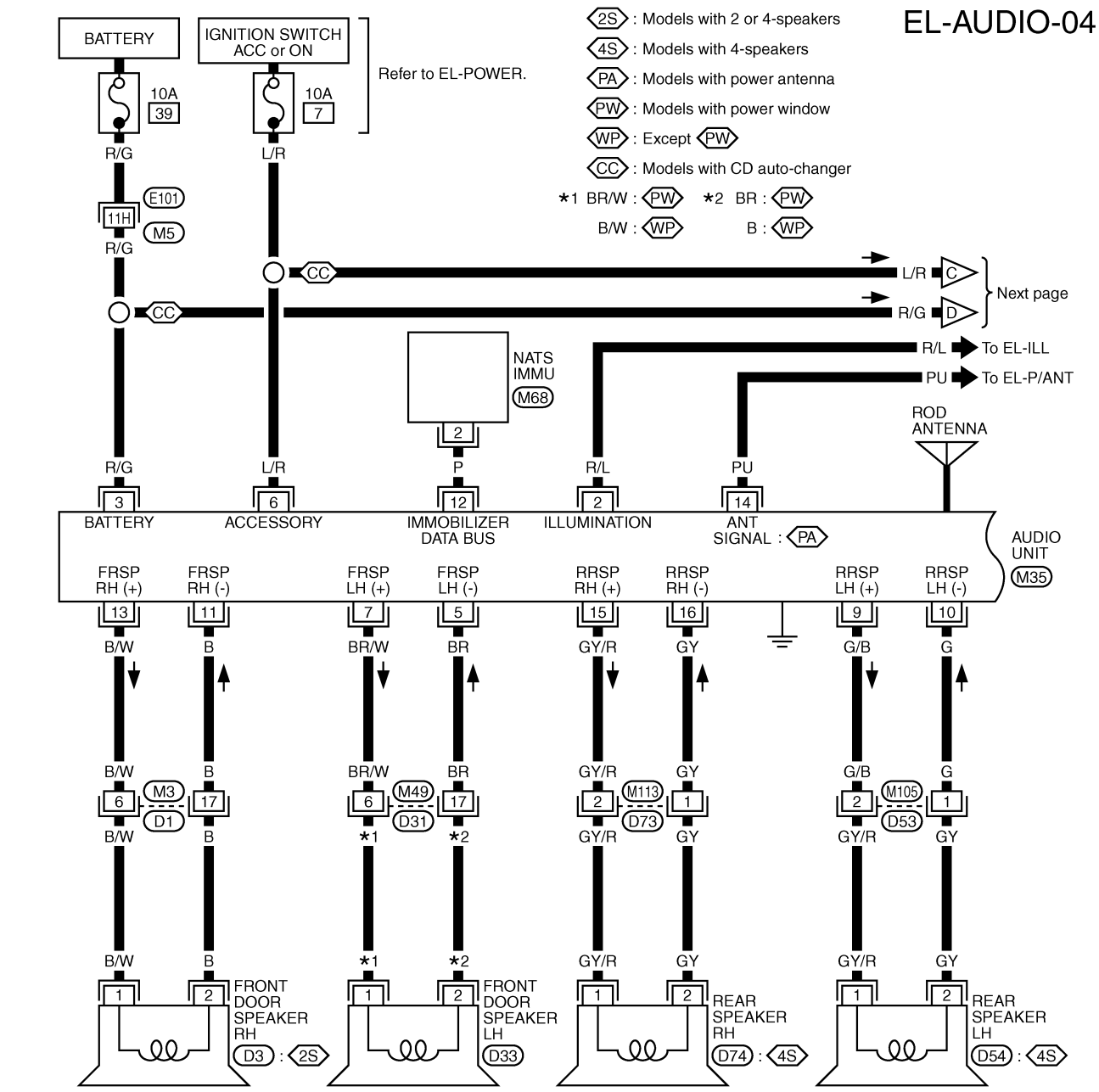

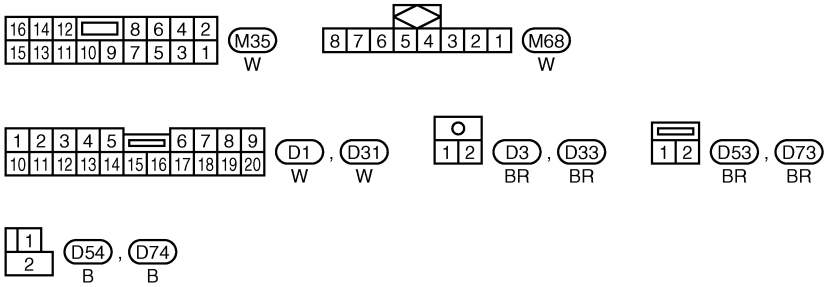

Refer to last page (Foldout page).
M5 , E101

GEL682A

Wiring Diagram — AUDIO —/RHD Models for Europe (Cont'd)

EL-AUDIO-05

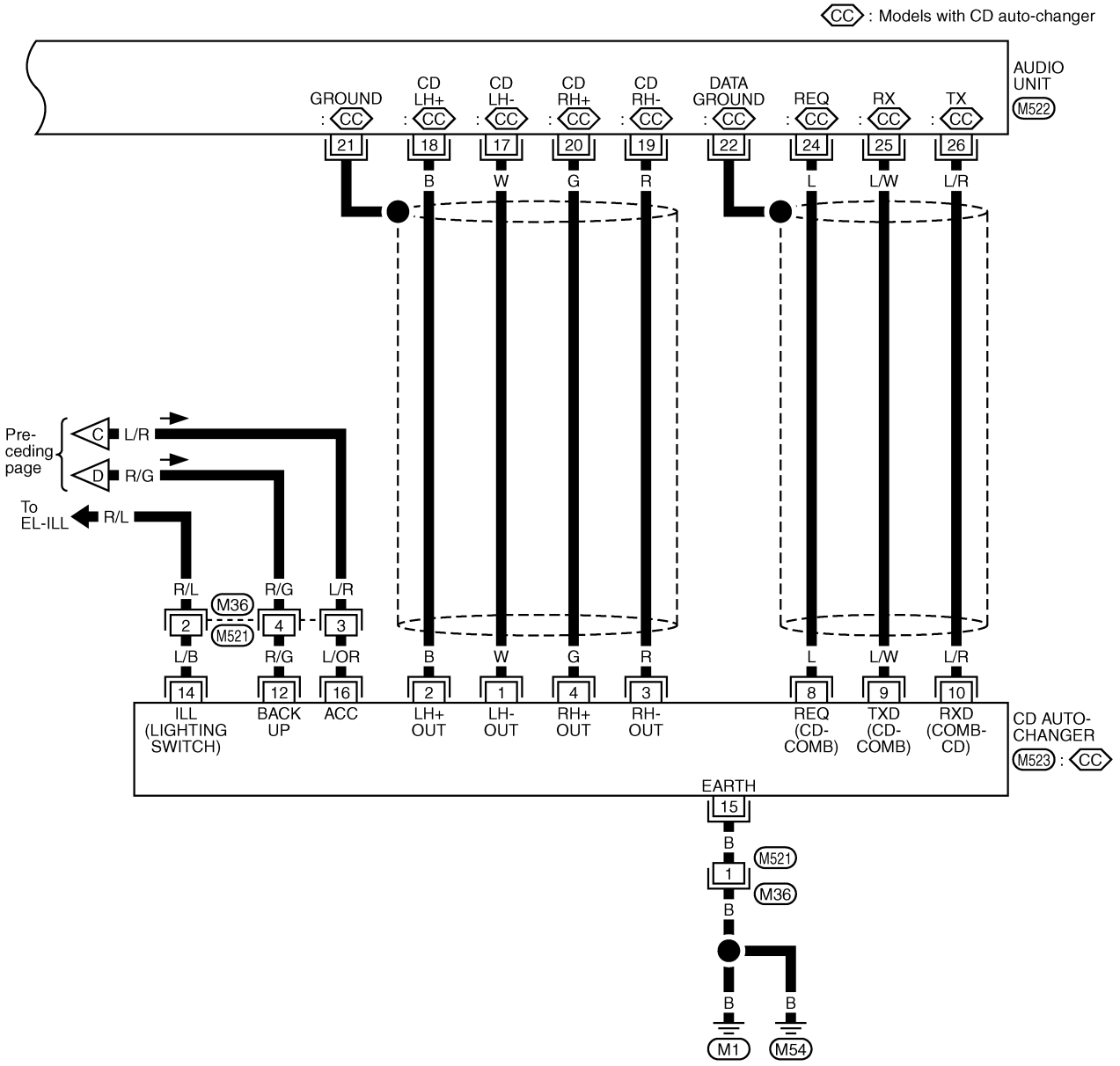

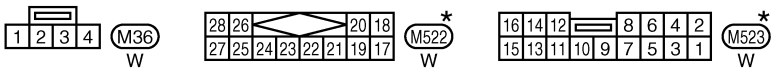

*: This connector is not shown in "HARNESS LAYOUT".

GEL683A

Wiring Diagram — NATS —/LHD Models

EL-NATS-01

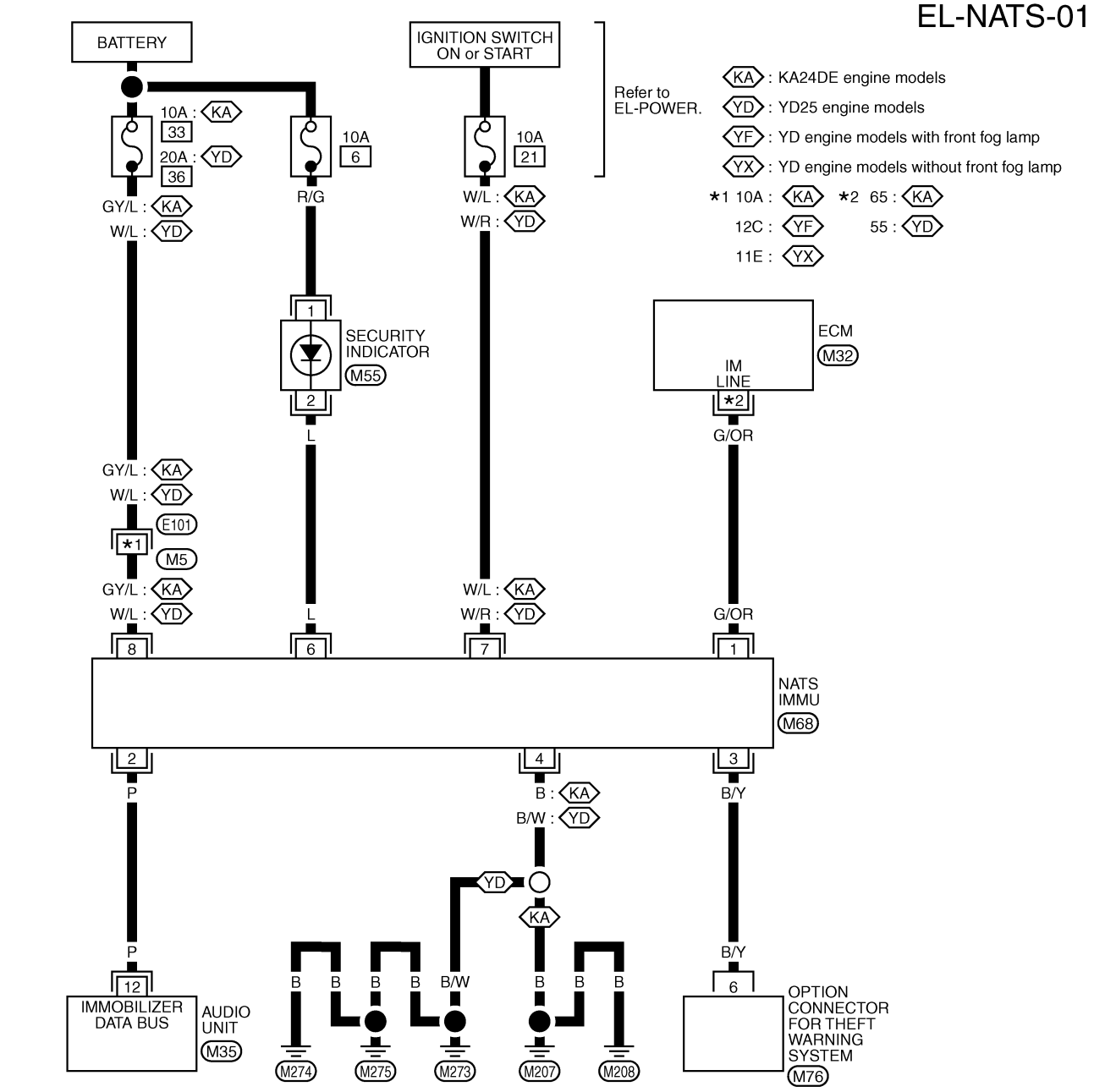

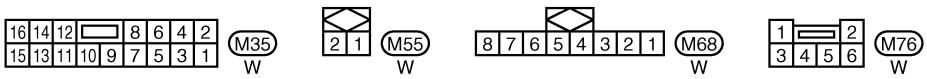

Refer to last page (Foldout page).

M5 , E101

M32

GEL684A

Wiring Diagram — NATS —/RHD Models

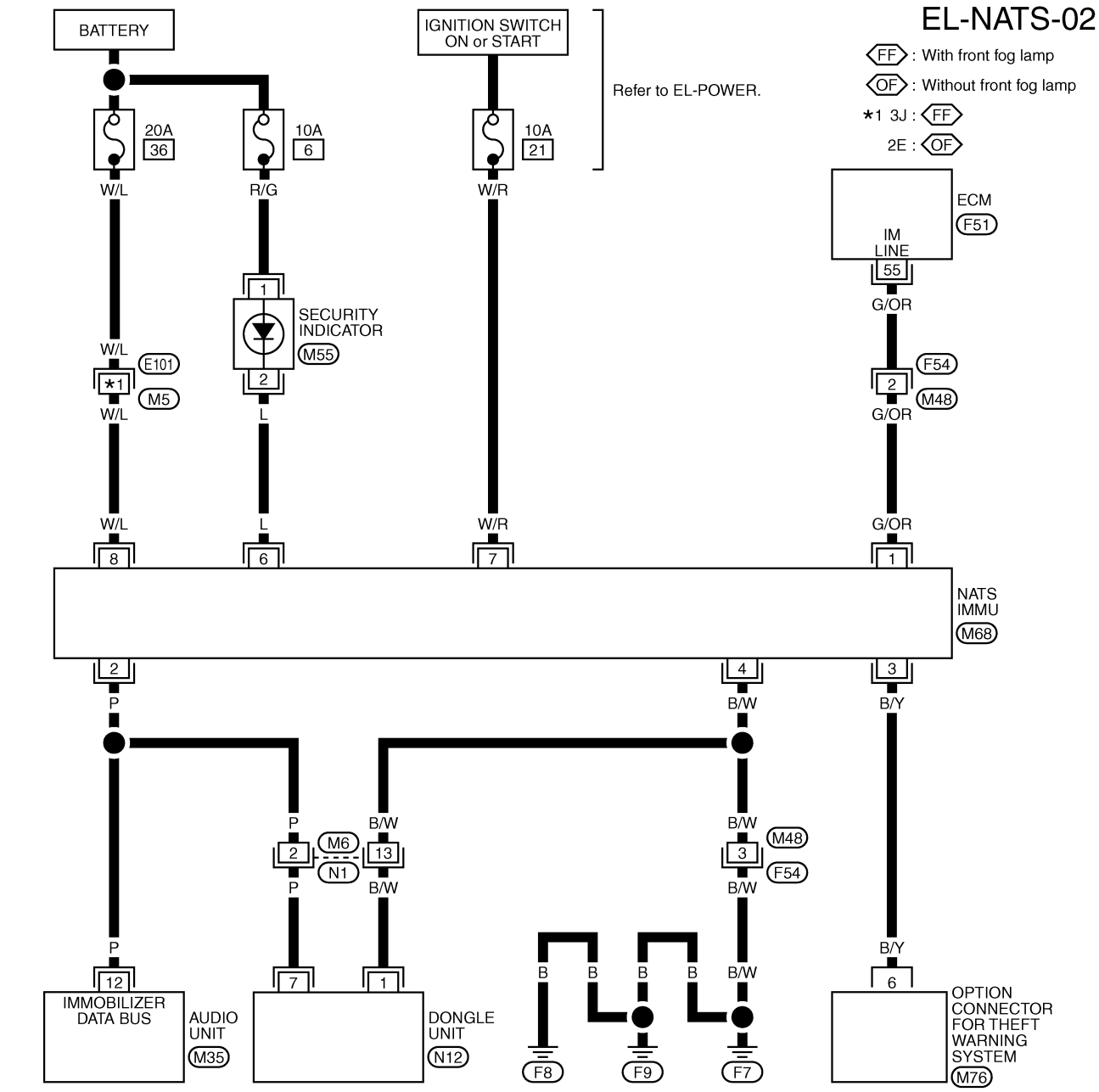

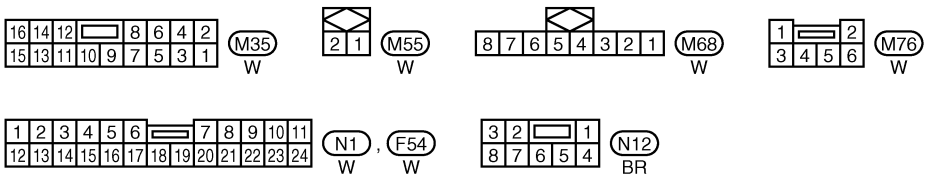

Refer to last page (Foldout page).
M5 , E101
F51

GEL685A

Main Harness

INSTRUMENT PANEL — LHD MODELS

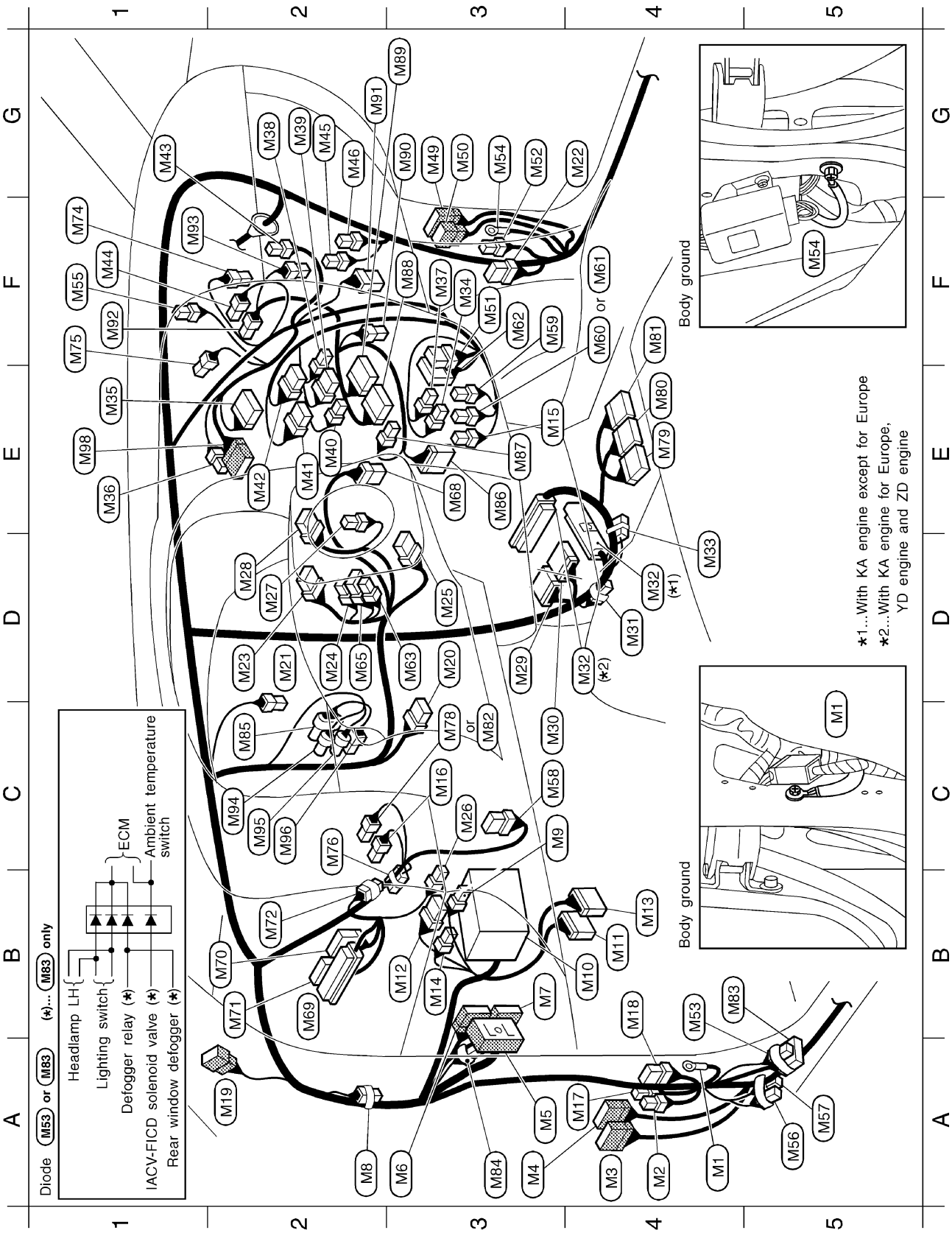

HEL012C

A4	M1	—	Body ground
A4	M2	W/2	Warning buzzer (Diesel engine except for Europe and the Middle East)
A4	M3	W/20	To D1
A3	M4	W/12	To D2 (With power window)
A3	M5	SMJ	To E101
A3	M6	W/24	To N1
B3	M7	BR/24	To N2
A2	M8	–/2	Diode (Diesel engine except for Europe and the Middle East)
C3	M9	L/4	Fuel pump relay (KA engine)
B4	M10	—	Fuse block
B4	M11	W/16	Data link connector
B3	M12	W/6	Fuse block
B4	M13	B/10	Check connector (Z24S)
B3	M14	W/4	Fuse block
E3	M15	B/3	Combination flasher unit
C3	M16	B/2	Stop lamp switch
A4	M17	L/4	Front fog lamp relay (YD engine for Europe)
B4	M18	W/6	Not used (QD engine with A/T)
A2	M19	W/6	To R1
D3	M20	W/6	Ignition switch
D2	M21	W/1	Parking brake switch (Stick type)
G4	M22	W/6	Fuel pump control module (Z24S)
D2	M23	BR/8	Lighting switch • Turn signal lamp switch
D2	M24	BR/4	Lighting switch
D3	M25	Y/7	Spiral cable (With air bag)
C3	M26	L/2	A/T check switch
D2	M27	B/1	Horn switch (Without air bag)
D2	M28	GY/8	Wiper and washer switch
D3	M29	W/12	Glow control unit (TD engine except for cold areas and QD engine)
C3	M30	W/16	Glow control unit (TD engine for cold areas)
D4	M31	GY/6	Joint connector-1 (KA engine)
D4	M32	SMJ	ECM (KA, YD and ZD engines)
D4	M33	—	Joint connector-3 (KA engine for Europe)
F3	M34	W/2	Ashtray illumination (With gasoline engine for the Middle East)
E1	M35	W/10	Audio unit (For Europe)
E1	M36	W/4	To CD changer sub-harness (For Europe)
F3	M37	B/2	Cigarette lighter
G2	M38	W/3	A/C switch (Without auto A/C)
G2	M39	W/6	Fan switch (Without auto A/C)
E2	M40	W/2	Fan switch illumination (Without auto A/C)
E2	M41	W/8	Hazard switch
E2	M42	W/6	Defogger switch (Except for the Middle East except Single cab with TD engine)
G1	M43	Y/2	Front passenger air bag module
F1	M44	BR/4	Thermo control amplifier (Without auto A/C)
G2	M45	BR/4	Fan resistor (Without auto A/C)
G2	M46	W/2	Blower motor
G3	M49	W/20	To D31
G3	M50	W/6	To D32 (With power window)
F3	M51	W/8	Door lock timer (With power window except for Europe)
G3	M52	W/2	Circuit breaker-2 (For Europe and with gasoline engine for the Middle East)
B4	M53	L/4	Diode (KA engine for Europe)
G3	M54	—	Body ground
F1	M55	W/2	Security indicator (With NATS)
A5	M56	–/2	Diode (Z24S)
A5	M57	–/2	Diode (Z24S)
C3	M58	BR/8	Multi-remote control unit (For Europe)
F3	M59	BR/6	Defogger relay (Except for the Middle East)
F4	M60	L/4	Rear fog lamp relay (For Europe or with KA engine without dual air bag except for the Middle East)
F4	M61	L/4	Front fog lamp relay (ZD engine)
F3	M62	W/18	Smart entrance control unit (For Europe)
D3	M63	W/3	Fog lamp switch (KA or ZD engines except for Europe and the Middle East)
D2	M65	W/6	Fog lamp switch (For Europe)
E3	M68	W/8	NATS IMMU (For Europe)
B2	M69	W/48	TCM (Transmission control module) (QD engine with A/T)
B2	M70	W/24	TCM (Transmission control module) (KA engine with A/T)
B2	M71	GY/24	TCM (Transmission control module) (KA engine with A/T)
B2	M72	–/6	Joint connector-2 (With A/T)
F1	M74	W/2	Intake air temperature sensor (With auto A/C)
F1	M75	B/2	Sunload sensor (With auto A/C)
C2	M76	W/6	Option connector (For Europe) (For theft warning system)
C3	M78	L/2	Shift lock brake switch (With A/T)
E4	M79	Y/12	Air bag diagnosis sensor unit (For pre-tensioner seat belt)
E4	M80	Y/20	Air bag diagnosis sensor unit
F4	M81	Y/12	Air bag diagnosis sensor unit (For pre-tensioner seat belt)
C3	M82	B/2	Brake pedal position switch (YD25)
B4	M83	L/10	Diode (KA engine except for Europe)
A3	M84	BR/2	Resistor (With A/T)
C2	M85	GY/6	Accelerator work unit (YD25)
E3	M86	BR/10	Mode door motor (With auto A/C)
E3	M87	W/2	In-vehicle sensor (With auto A/C)
F3	M88	GY/20	A/C auto amp. (With auto A/C)
G3	M89	GY/16	A/C auto amp. (With auto A/C)
G3	M90	L/2	Aspirator motor (With auto A/C)
G2	M91	B/6	Air mix door motor (With auto A/C)
F1	M92	W/4	Fan control amp. (With auto A/C)
F1	M93	W/4	Intake door motor (With auto A/C)
C2	M94	BR/3	Accelerator position sensor (ZD30)
C2	M95	GY/3	Accelerator position switch (ZD30)
C2	M96	W/3	Accelerator switch (F/C) (ZD30)
E1	M98	W/12	Audio unit (Via sub-harness) (Except for Europe)

Diode M8

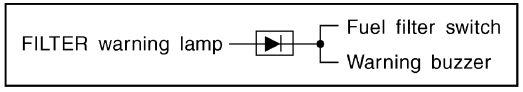

Diode M56, M57

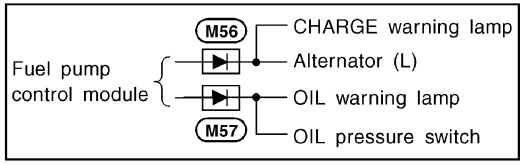

Main Harness (Cont'd)

INSTRUMENT PANEL — RHD MODELS

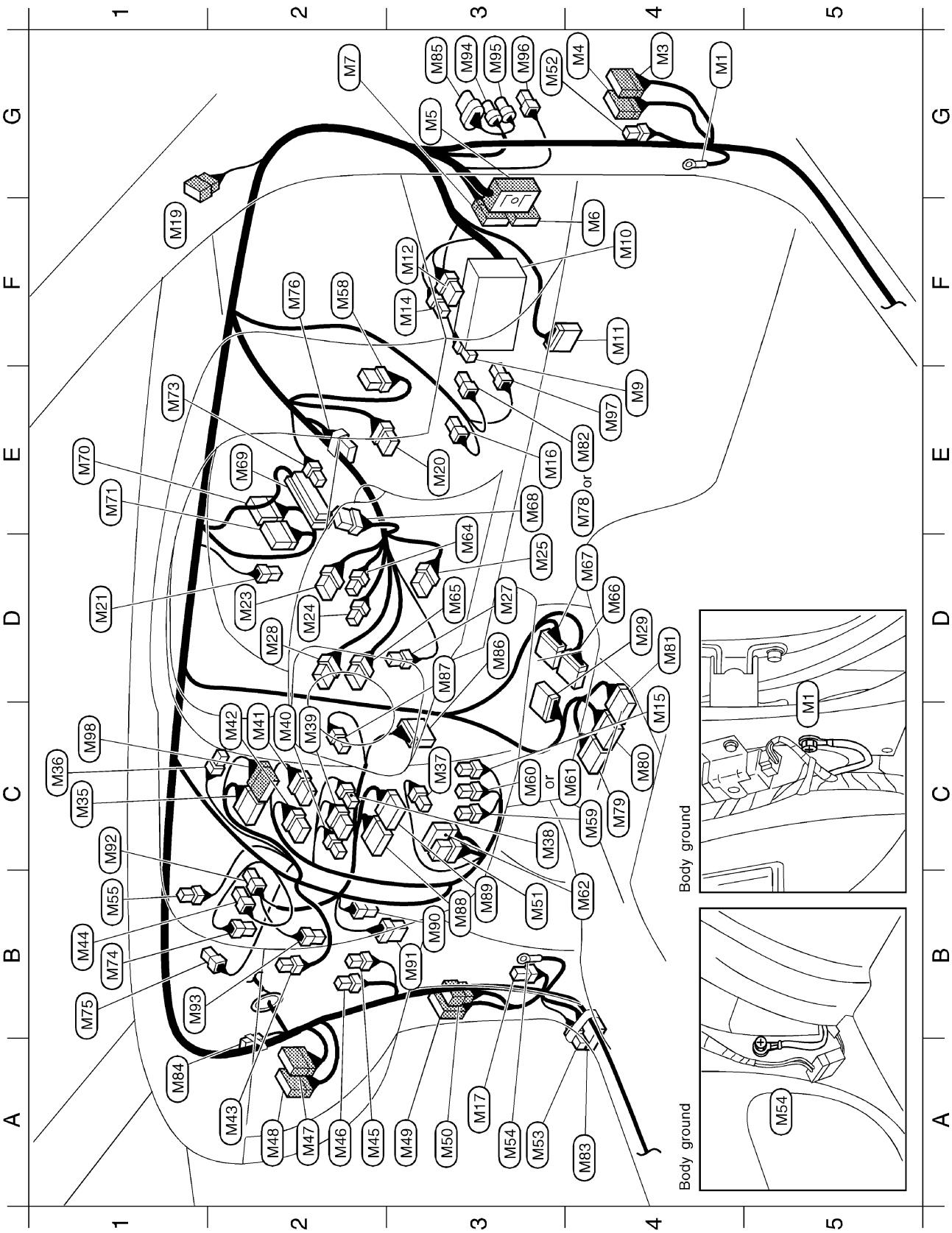

HEL014C

G4	M1	—	Body ground
G4	M3	W/20	To D1
G4	M4	W/12	To D2 (With power window)
G3	M5	SMJ	To E101
F4	M6	W/24	To N1
G2	M7	BR/24	To N2
E4	M9	L/4	Fuel pump relay (KA and VG engines)
F4	M10	—	Fuse block
F4	M11	W/16	Data link connector
F3	M12	W/6	Fuse block
F3	M14	W/4	Fuse block
C4	M15	B/3	Combination flasher unit
E3	M16	B/2	Stop lamp switch
A3	M17	L/4	Front fog lamp relay (For Europe)
F1	M19	W/6	To R1
E3	M20	W/6	Ignition switch
D1	M21	W/1	Parking brake switch (Stick type)
D2	M23	BR/8	Lighting switch • Turn signal lamp switch
D2	M24	BR/4	Lighting switch
D3	M25	Y/7	Spiral cable (With air bag)
D3	M27	B/1	Horn switch (Without air bag)
D2	M28	GY/8	Wiper and washer switch
D4	M29	W/12	Glow control unit (TD engine without EGR and QD engine)
C1	M35	W/16	Audio unit (For Europe)
C1	M36	W/4	To CD changer sub-harness (For Europe)
C3	M37	B/2	Cigarette lighter
C3	M38	W/3	A/C switch (Without auto A/C)
C2	M39	W/6	Fan switch (Without auto A/C)
C2	M40	W/2	Fan switch illumination (Without auto A/C)
C2	M41	W/8	Hazard switch
C2	M42	W/6	Defogger switch (Except models without intermittent wiper for Australia)
A2	M43	Y/2	Air bag module passenger side
B1	M44	BR/4	Thermo control amplifier (Without auto A/C)
A2	M45	BR/4	Fan resistor (Without auto A/C)
A2	M46	W/2	Blower motor
A2	M47	W/16	To F55 (KA, VG, YD and ZD engines)
A2	M48	W/24	To F54 (KA, VG, YD and ZD engines)
A3	M49	W/20	To D31
A3	M50	W/6	To D32 (With power window)
B3	M51	W/8	Door lock timer (With power window except for Europe)
G3	M52	W/2	Circuit breaker-2 (For Europe)
A3	M53	L/4	Diode (KA engine without intermittent wiper for Australia)
A3	M54	—	Body ground
B1	M55	W/2	Security indicator (For Europe)
F2	M58	BR/8	Multi-remote control unit (For Europe)
C4	M59	BR/6	Defogger relay (Except models without intermittent wiper for Australia)
C3	M60	L/4	Rear fog lamp relay (For Europe)
C4	M61	W/4	Front fog lamp relay (ZD engine)
B4	M62	W/18	Smart entrance control unit (For Europe)
D3	M64	L/4	Front fog lamp switch (ZD engine)
D3	M65	W/6	Front and rear fog lamp switch (For Europe)
D4	M66	GY/20	ECM (Diesel engine with EGR)
D4	M67	GY/16	ECM (Diesel engine with EGR)
E3	M68	W/8	NATS IMMU (For Europe)
E2	M69	W/48	TCM (Transmission control module) (With A/T with VG engine)
E1	M70	W/24	TCM (Transmission control module) (With A/T with KA engine)
E1	M71	GY/24	TCM (Transmission control module) (With A/T with KA engine)
E1	M73	W/4	A/T device (With A/T with column shift)
B1	M74	W/2	Intake air temperature sensor (With auto A/C)
B1	M75	B/2	Sunload sensor (With auto A/C)
F2	M76	W/6	Option connector for theft warning system (For Europe)
E4	M78	L/2	Shift lock brake switch (With A/T)
C4	M79	Y/12	Air bag diagnosis sensor unit (With air bag for Europe and Australia)
C4	M80	Y/20	Air bag diagnosis sensor unit (With air bag)
D4	M81	Y/12	Air bag diagnosis sensor unit (With air bag for Europe and Australia)
E4	M82	B/2	Brake pedal position switch (YD engine)
A4	M83	L/10	Diode (KA engine except without intermittent wiper for Australia)
A1	M84	BR/2	Resistor (With A/T)
G3	M85	GY/6	Accelerator work unit (YD engine)
D3	M86	BR/10	Mode door motor (With auto A/C)
D3	M87	W/2	In-vehicle sensor (With auto A/C)
B3	M88	GY/20	A/C auto amp. (With auto A/C)
B3	M89	GY/16	A/C auto amp. (With auto A/C)
B3	M90	L/2	Aspirator motor (With auto A/C)
B3	M91	B/6	Air mix door motor (With auto A/C)
C1	M92	W/4	Fan control amp. (With auto A/C)
B1	M93	W/4	Intake door motor (With auto A/C)
G3	M94	BR/3	Accelerator position sensor (ZD engine)
G3	M95	GY/3	Accelerator position switch (ZD engine)
G3	M96	W/3	Accelerator switch (F/C) (ZD engine)
E4	M97	W/2	Kickdown switch (With A/T with VG engine)
C1	M98	W/12	Audio unit (Via sub-harness) (Except for Europe)

Engine compartment

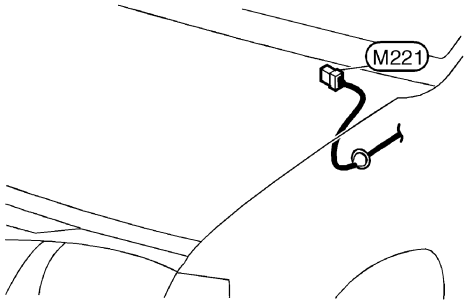

M221 W/6 : Wiper motor (TD and QD engines)

Diode M53 or M83 (*)... M83 only

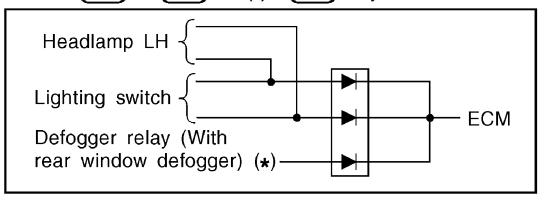

Main Harness (Cont'd)

BODY SIDE — LHD MODELS

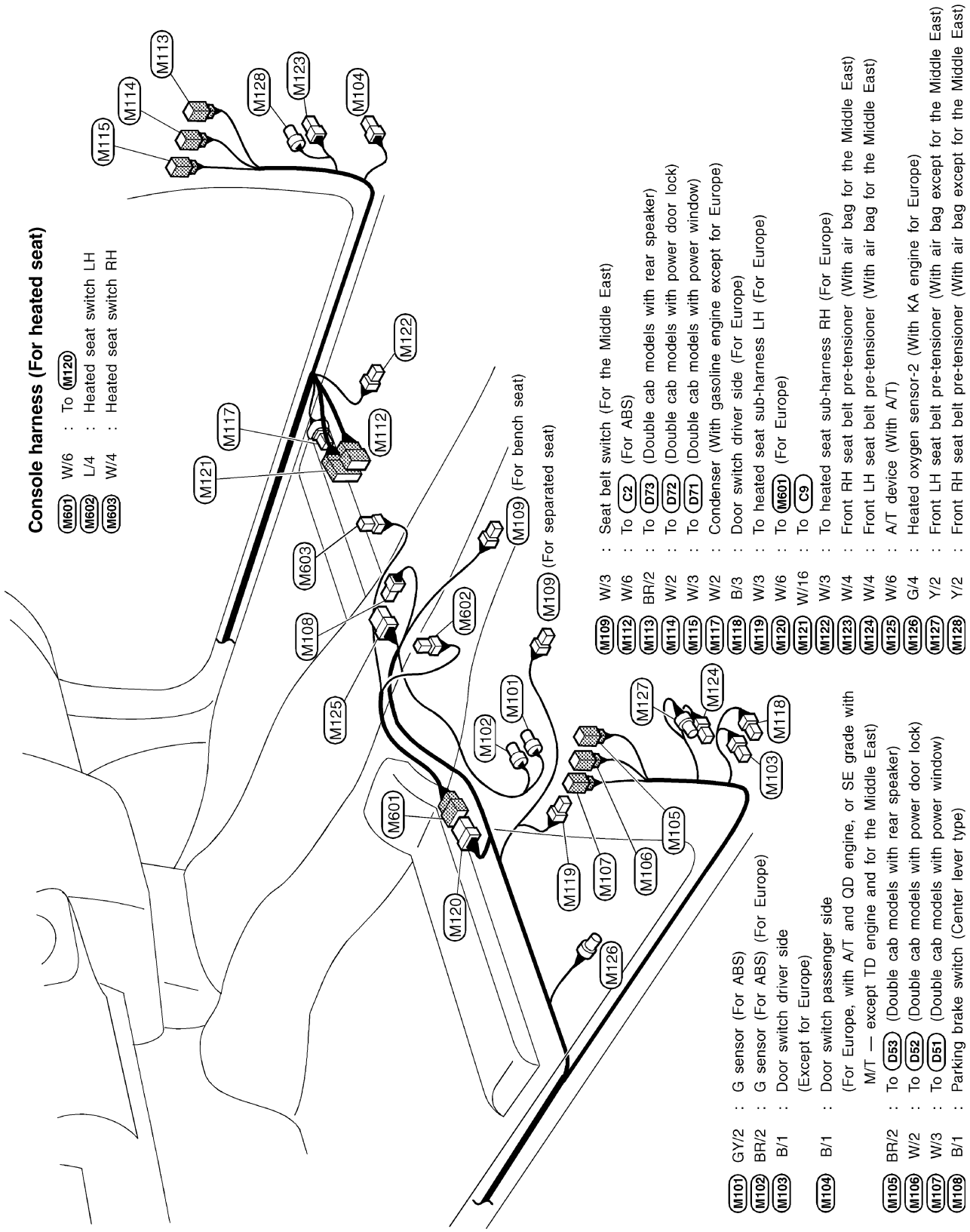

HEL043C

Main Harness (Cont'd)

BODY SIDE — RHD MODELS

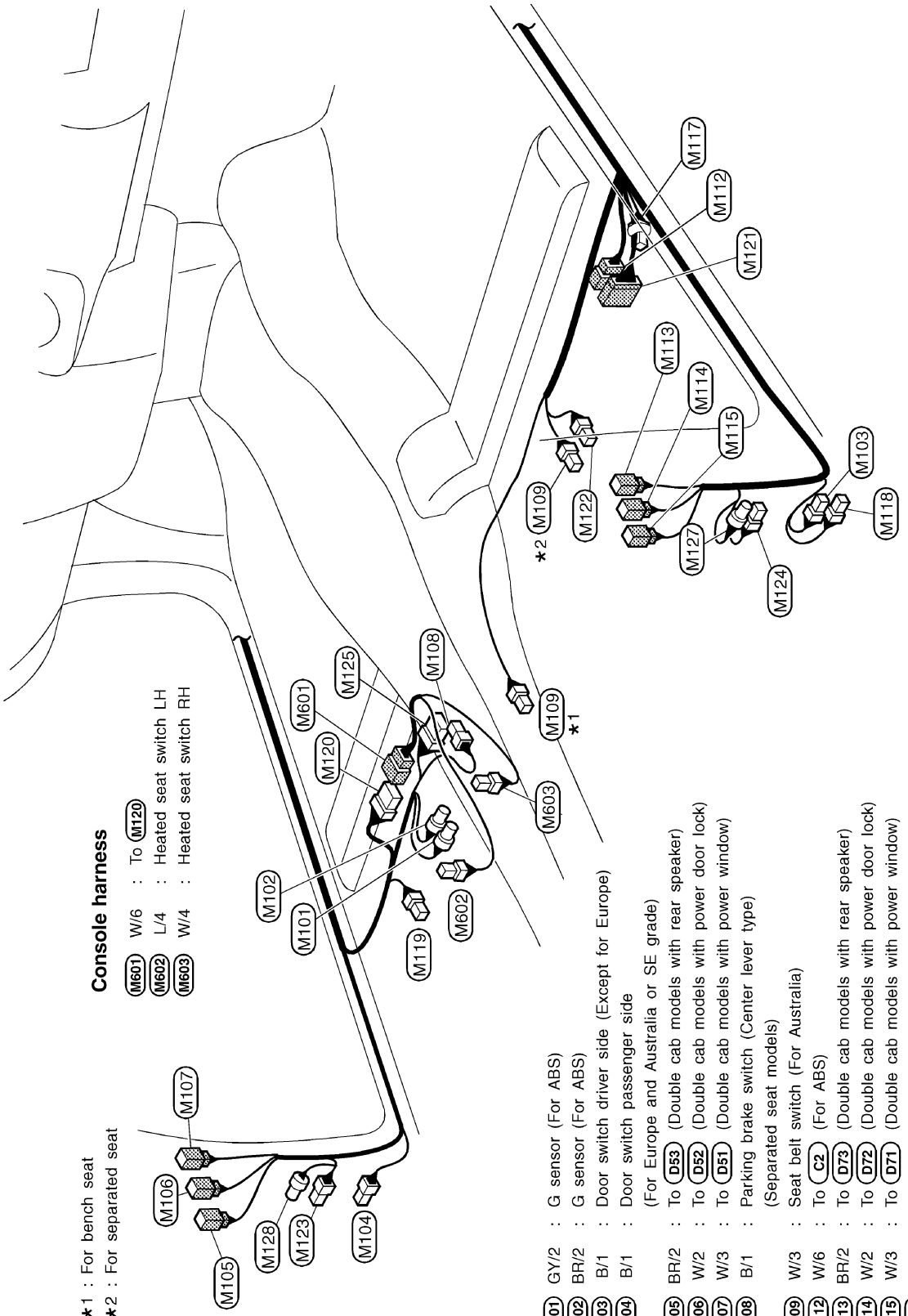

*1 : For bench seat
*2 : For separated seat

Console harness

M601	W/6	:	To M120
M602	L/4	:	Heated seat switch LH
M603	W/4	:	Heated seat switch RH

M101	GY/2	:	G sensor (For ABS)
M102	BR/2	:	G sensor (For ABS)
M103	B/1	:	Door switch driver side (Except for Europe)
M104	B/1	:	Door switch passenger side (For Europe and Australia or SE grade)
M105	BR/2	:	To D53 (Double cab models with rear speaker)
M106	W/2	:	To D52 (Double cab models with power door lock)
M107	W/3	:	To D51 (Double cab models with power window)
M108	B/1	:	Parking brake switch (Center lever type) (Separated seat models)
M109	W/3	:	Seat belt switch (For Australia)
M112	W/6	:	To C2 (For ABS)
M113	BR/2	:	To D73 (Double cab models with rear speaker)
M114	W/2	:	To D72 (Double cab models with power door lock)
M115	W/3	:	To D71 (Double cab models with power window)
M117	W/2	:	Condenser (KA engine)
M118	B/3	:	Door switch driver side (For Europe)
M119	W/3	:	To heated seat sub-harness LH (For Europe)
M120	W/6	:	To M601 (For Europe)
M121	W/16	:	To C9
M122	W/3	:	To heated seat sub-harness RH (For Europe)
M123	W/4	:	Front LH seat belt pre-tensioner (With air bag for Europe and Australia)
M124	W/4	:	Front RH seat belt pre-tensioner (With air bag for Europe and Australia)
M125	W/6	:	A/T device (A/T models with floor shift)
M127	Y/2	:	Front RH seat belt pre-tensioner (With air bag except QD engine)
M128	Y/2	:	Front LH seat belt pre-tensioner (With air bag except QD engine)

HEL017C

Main Harness (Cont'd)

ENGINE COMPARTMENT — Z, TD AND QD ENGINES (LHD models)

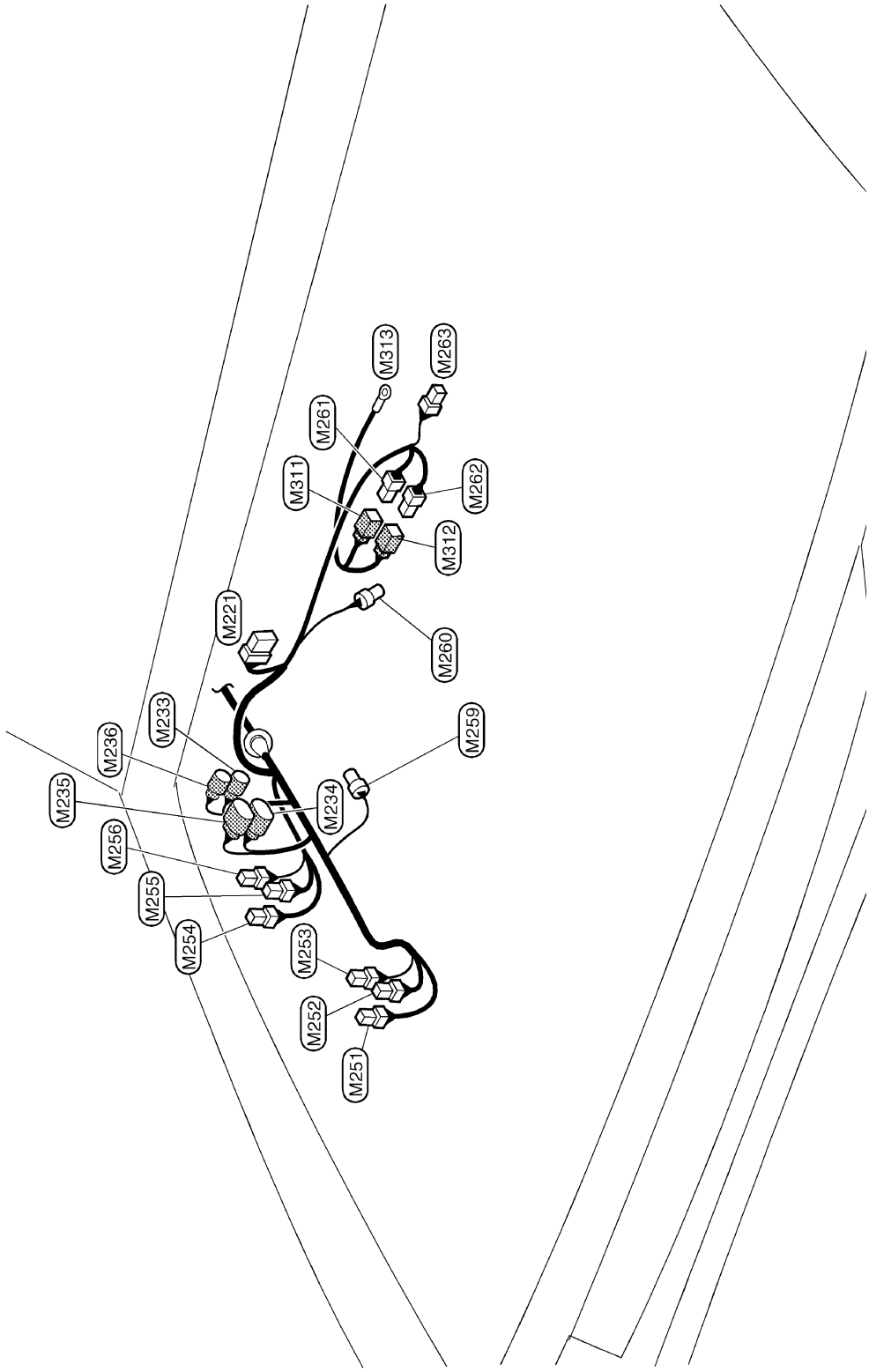

M221	W/6	:	Wiper motor
M233	W/2	:	Park/Neutral position switch (With A/T)
M234	GY/8	:	Park/Neutral position switch (With A/T)
M235	BR/8	:	To terminal cord assembly (With A/T)
M236	GY/3	:	Revolution sensor (With A/T)
M251	W/1	:	Glow relay-1 (Diesel engine)
M252	W/1	:	Glow relay-1 (Diesel engine)
M253	G/2	:	Glow relay-1 (Diesel engine)
M254	W/1	:	Glow relay-2 (TD27 engine for cold areas)
M255	W/1	:	Glow relay-2 (TD27 engine for cold areas)
M256	G/2	:	Glow relay-2 (TD27 engine for cold areas)
M259	BR/2	:	Fuel filter switch (Diesel engine)
M260	GY/3	:	Carburetor (Z engine)
M261	B/1	:	To (M311) (QD engine)
M262	L/2	:	To (M312) (TD engine)
M263	B/2	:	Dropping resistor (TD27 engine for cold areas)

Sub-harness (Diesel engine)

M311	B/1	:	To (M261) (QD engine)
M312	L/2	:	To (M262) (TD engine)
M313	—	:	Glow plug

HEL044C

NOTE

Engine Room Harness

LHD MODELS — GASOLINE ENGINE

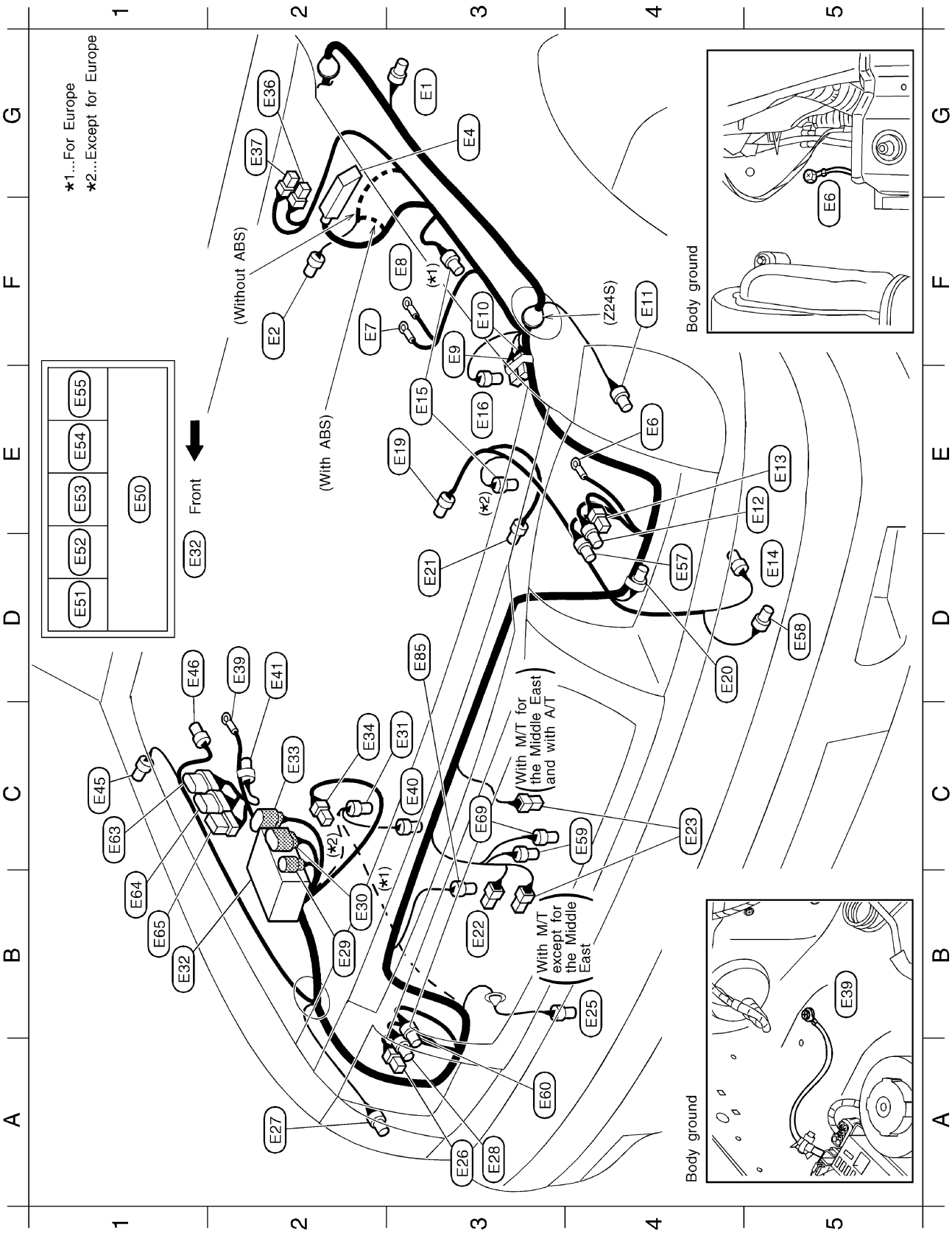

HEL018C

G3	E1	GY/2	:	Side turn signal lamp LH (With multi-beam type headlamp)
F2	E2	GY/2	:	Brake fluid level switch
G3	E4	B/31	:	ABS actuator and electric unit (For ABS)
E4	E6	—	:	Body ground
F2	E7	—	:	Ignition coil (Z engine)
F3	E8	—	:	Ignition coil (Z engine)
F3	E9	–/2	:	Resistor (Z engine)
F3	E10	W/2	:	Condenser (Z engine)
F4	E11	GY/3	:	Front combination lamp LH (Without multi-beam type headlamp)
E5	E12	GY/3	:	Front combination lamp LH (With multi-beam type headlamp)
E5	E13	B/3	:	Headlamp LH
D5	E14	GY/2	:	Washer motor
E3	E15	BR/2	:	Front wheel sensor LH (For ABS)
E3	E16	GY/2	:	Intake air temperature sensor (KA engine for Europe)
E3	E19	GY/3	:	Distributor (Z engine)
D4	E20	GY/2	:	Option connector (For hood switch) (For Europe)
D3	E21	B/1	:	Compressor (Z engine)
B3	E22	B/1	:	Horn low
C4	E23	B/1	:	Horn high
B4	E25	GY/4	:	Triple-pressure switch
A3	E26	B/3	:	Headlamp RH
A2	E27	GY/3	:	Front combination lamp RH (Without multi-beam type headlamp)
A3	E28	GY/3	:	Front combination lamp RH (With multi-beam type headlamp)
B2	E29	GY/2	:	To E204
B2	E30	GY/8	:	To E203
C3	E31	GY/2	:	Front wheel sensor RH (For ABS)
B1	E32	—	:	Relay box (Fusible link and fuse box)
C2	E33	SB/8	:	To E205
C2	E34	B/1	:	Battery
G2	E36	B/1	:	ISC-FI pot control solenoid valve (Z engine)
G2	E37	B/1	:	ISC-FI pot control solenoid valve (Z engine)
D2	E39	—	:	Body ground
C3	E40	B/2	:	Power steering oil pressure switch (For Europe)
D2	E41	B/1	:	Option connector (For front fog lamp) (For Europe)
C1	E45	GY/2	:	Side turn signal lamp RH (With multi-beam type headlamp)
D1	E46	GY/3	:	Power antenna (For the Middle East and Europe)
E1	E50	—	:	Fusible link and fuse box
D1	E51	L/4	:	Cooling fan relay (KA engine for the Middle East and Europe)
D1	E52	L/4	:	Air conditioner relay
E1	E53	W/3	:	Horn relay
E1	E54	BR/6	:	Park/Neutral position relay (With A/T)
E1	E55	B/5	:	Automatic choke relay (Z engine)
		BR/6	:	ECM relay (KA engine)
D4	E57	–/3	:	Headlamp aiming motor LH (For the Middle East and Europe)
D5	E58	GY/2	:	Headlamp washer motor (For Europe)
C4	E59	B/2	:	Ambient sensor (For Europe)
A3	E60	–/3	:	Headlamp aiming motor RH (For the Middle East and Europe)
C1	E63	SB/6	:	Daytime light unit (With daytime light system)
B1	E64	SB/8	:	Daytime light unit (With daytime light system)
B1	E65	W/6	:	Headlamp washer amplifier (For Europe)
C3	E69	BR/2	:	Ambient temperature switch (KA engine)
D3	E85	GY/2	:	Cooling fan motor (KA engine for the Middle East and Europe)

PASSENGER COMPARTMENT

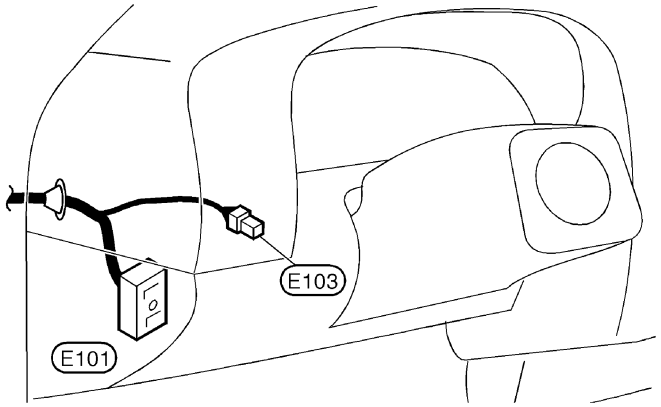

E101	SMJ	:	To M5
E103	B/2	:	Fuse block

Resistor E9

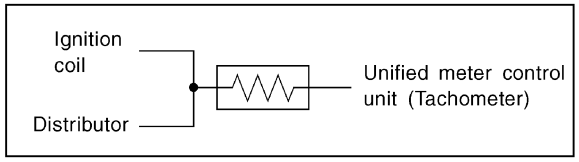

Engine Room Harness (Cont'd)

LHD MODELS — DIESEL ENGINE

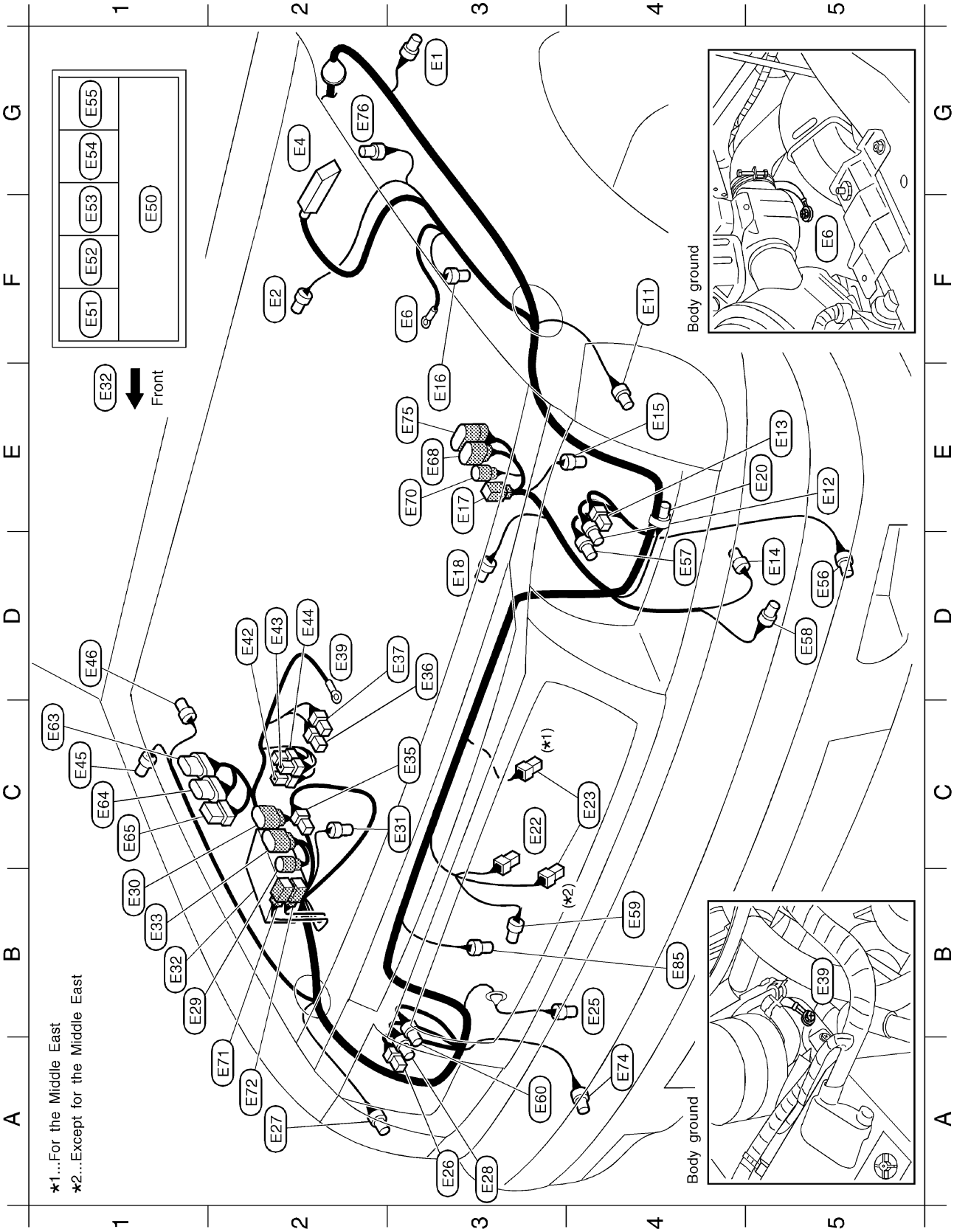

HEL045C

G3	E1	GY/2	:	Side turn signal lamp LH (Except for the Middle East)
F2	E2	GY/2	:	Brake fluid level switch (With M/T)
G2	E4	B/31	:	ABS actuator and electric unit (For ABS)
F3	E6	—	:	Body ground
F4	E11	GY/3	:	Front combination lamp LH (For the Middle East)
E5	E12	GY/3	:	Front combination lamp LH (Except for the Middle East)
E5	E13	B/3	:	Headlamp LH
D5	E14	GY/2	:	Washer motor
E4	E15	BR/2	:	Front wheel sensor LH (For ABS)
E3	E16	GY/2	:	Intake air temperature sensor (YD and ZD engines)
E3	E17	B/2	:	To A2
D3	E18	GY/2	:	Thermoswitch (TD engine for the Middle East and QD engines)
E5	E20	GY/2	:	Option connector (For hood switch) (For Europe)
C3	E22	B/1	:	Horn low
C4	E23	B/1	:	Horn high
B4	E25	GY/4	:	Triple-pressure switch
A3	E26	B/3	:	Headlamp RH
A2	E27	GY/3	:	Front combination lamp RH (For the Middle East)
A3	E28	GY/3	:	Front combination lamp RH (Except for the Middle East)
B1	E29	GY/2	:	To E204
B1	E30	GY/8	:	To E203 (YD and ZD engines)
C3	E31	GY/2	:	Front wheel sensor RH (For ABS)
B1	E32	—	:	Relay box (Fusible link and fuse box)
B1	E33	SB/8	:	To E205
C3	E35	B/1	:	To E206 (TD and QD engines)
D3	E36	B/1	:	IACV-FICD solenoid valve (TD and QD engines)
D3	E37	B/1	:	IACV-FICD solenoid valve (TD and QD engines)
D2	E39	—	:	Body ground
D2	E42	W/1	:	Glow relay-1 (YD and ZD engines)
D2	E43	W/1	:	Glow relay-1 (YD and ZD engines)
D2	E44	G/2	:	Glow relay-1 (YD and ZD engines)
C1	E45	GY/2	:	Side turn signal lamp RH (Except for the Middle East)
D1	E46	GY/3	:	Power antenna (For Europe)
F1	E50	—	:	Fusible link and fuse box
F1	E51	L/4	:	Cooling fan relay (TD engine for the Middle East, QD, YD and ZD engines)
F1	E52	L/4	:	Air conditioner relay
F1	E53	W/3	:	Horn relay
G1	E54	L/4	:	Park/Neutral position (PNP) relay (With A/T)
G1	E55	BR/6	:	ECM relay (YD and ZD engines)
		B/5	:	ATP relay (With A/T)
D5	E56	B/2	:	Front fog lamp LH (For Europe or with ZD engine)
D4	E57	–/3	:	Headlamp aiming motor LH (For the Middle East and Europe)
D5	E58	GY/2	:	Headlamp washer motor (For Europe)
B4	E59	B/2	:	Ambient sensor (For auto A/C) (YD and ZD engines)
A3	E60	–/3	:	Headlamp aiming motor RH (For the Middle East and Europe)
C1	E63	SB/6	:	Daytime light unit (With daytime light system)
C1	E64	SB/8	:	Daytime light unit (With daytime light system)
C1	E65	W/6	:	Headlamp washer amplifier (For Europe)
E3	E68	GY/8	:	To A13 (TD and QD engines with M/T)
E3	E70	BR/3	:	To A14 (YD and ZD engines)
A2	E71	B/2	:	To E231 (YD and ZD engines)
A2	E72	B/1	:	To E232 (YD and ZD engines)
A4	E74	B/2	:	Front fog lamp RH (For Europe or with ZD engine)
E3	E75	GY/10	:	To A15 (With A/T)
G2	E76	GY/2	:	Dropping resistor (With A/T)
B4	E85	GY/2	:	Cooling fan motor (Except TD engine)

PASSENGER COMPARTMENT

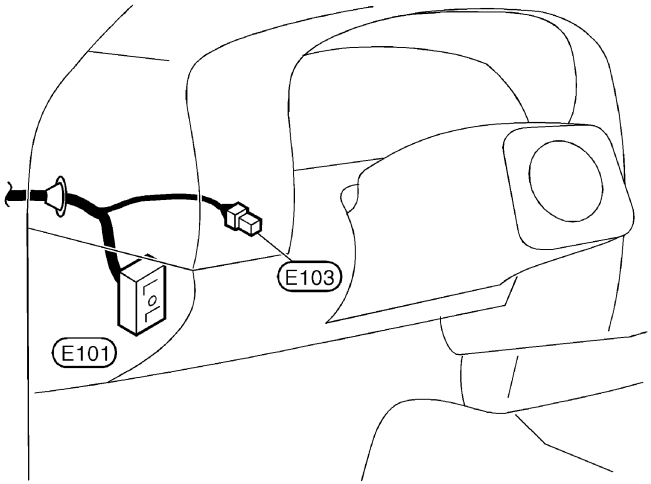

E101	SMJ	:	To M5
E103	B/2	:	Fuse block

Engine Room Harness (Cont'd)

RHD MODELS — DIESEL ENGINE

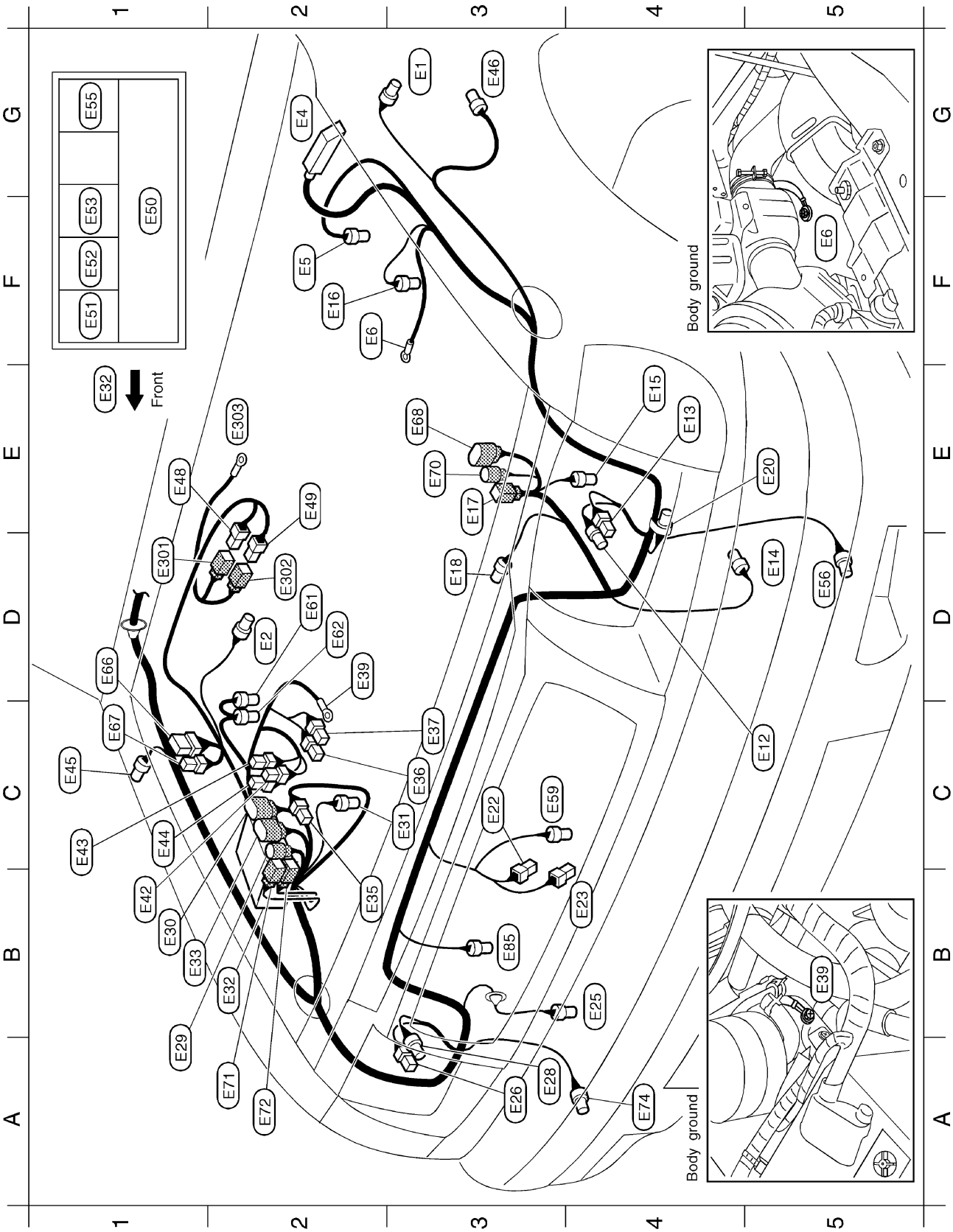

HEL968B

G3 E1 GY/2 : Side turn signal lamp LH
D2 E2 GY/2 : Brake fluid level switch
G2 E4 B/31 : ABS actuator and electric unit (For ABS)
F2 E5 BR/2 : Fuel filter switch (Except for Europe)
F2 E6 — : Body ground
C5 E12 GY/3 : Front combination lamp LH
E4 E13 B/3 : Headlamp LH
D5 E14 GY/2 : Washer motor
E4 E15 BR/2 : Front wheel sensor LH (For ABS)
F2 E16 GY/2 : Intake air temperature sensor (YD and ZD engines)
E3 E17 B/2 : To A2
D3 E18 GY/2 : Thermoswitch (QD engine)
E5 E20 GY/2 : Option connector (For hood switch) (For Europe)
C3 E22 B/1 : Horn low
B4 E23 B/1 : Horn high (ZD engine except for Australia, YD and QD engines)
B4 E25 GY/4 : Triple-pressure switch
A3 E26 B/3 : Headlamp RH
A3 E28 BR/3 : Front combination lamp RH
A1 E29 GY/2 : To E204
B1 E30 GY/8 : To E203 (With ECM control engine)
C3 E31 GY/2 : Front wheel sensor RH (For ABS)
B2 E32 — : Relay box (Fusible link and fuse box)
B1 E33 SB/8 : To E205
B2 E35 B/1 : To E206 (TD and QD engines)
C3 E36 B/1 : IACV-FICD solenoid valve (TD and QD engines)
C3 E37 B/1 : IACV-FICD solenoid valve (TD and QD engines)
D2 E39 — : Body ground
B1 E42 W/1 : Glow relay-1
C1 E43 W/1 : Glow relay-1
C1 E44 G/2 : Glow relay-1
C1 E45 GY/2 : Side turn signal lamp RH
G3 E46 GY/3 : Power antenna (For Europe)
E1 E48 B/1 : To E301 (QD engine)
E2 E49 L/2 : To E302 (TD engine)
F1 E50 — : Fusible link and fuse box
F1 E51 L/4 : Cooling fan relay (Except TD engine)
F1 E52 L/4 : Air conditioner relay
F1 E53 W/3 : Horn relay
G1 E55 BR/6 : ECM relay (YD and ZD engines)
D5 E56 B/2 : Front fog lamp LH (For Europe)
C3 E59 B/2 : Ambient sensor (YD and ZD engines)
D2 E61 B/2 : EGRC-solenoid valve (Throttle chamber) (TD engine with EGR)
D2 E62 BR/2 : EGRC-solenoid valve (EGR valve) (TD engine with EGR)
D1 E66 GY/6 : Dim-dip lamp unit (For Europe)
C1 E67 GY/4 : Dim-dip lamp unit (For Europe)
E3 E68 GY/8 : To A13 (TD and QD engines)
E3 E70 BR/3 : To A14 (YD and ZD engines)
A2 E71 B/2 : To E231 (YD and ZD engines)
A2 E72 B/1 : To E232 (YD and ZD engines)
A4 E74 B/2 : Front fog lamp RH (For Europe)
B3 E85 GY/2 : Cooling fan motor (Except TD engine)

PASSENGER COMPARTMENT

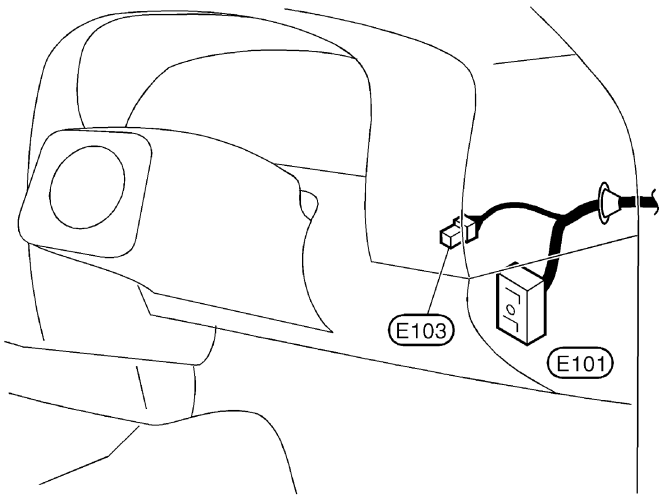

E101 SMJ : To M5
E103 B/2 : Fuse block

Sub-harness

D1 E301 B/1 : To E48 (QD engine)
D2 E302 L/2 : To E49 (TD engine)
E2 E303 — : Glow plug (TD and QD engines)

Engine Control Harness

VG ENGINE

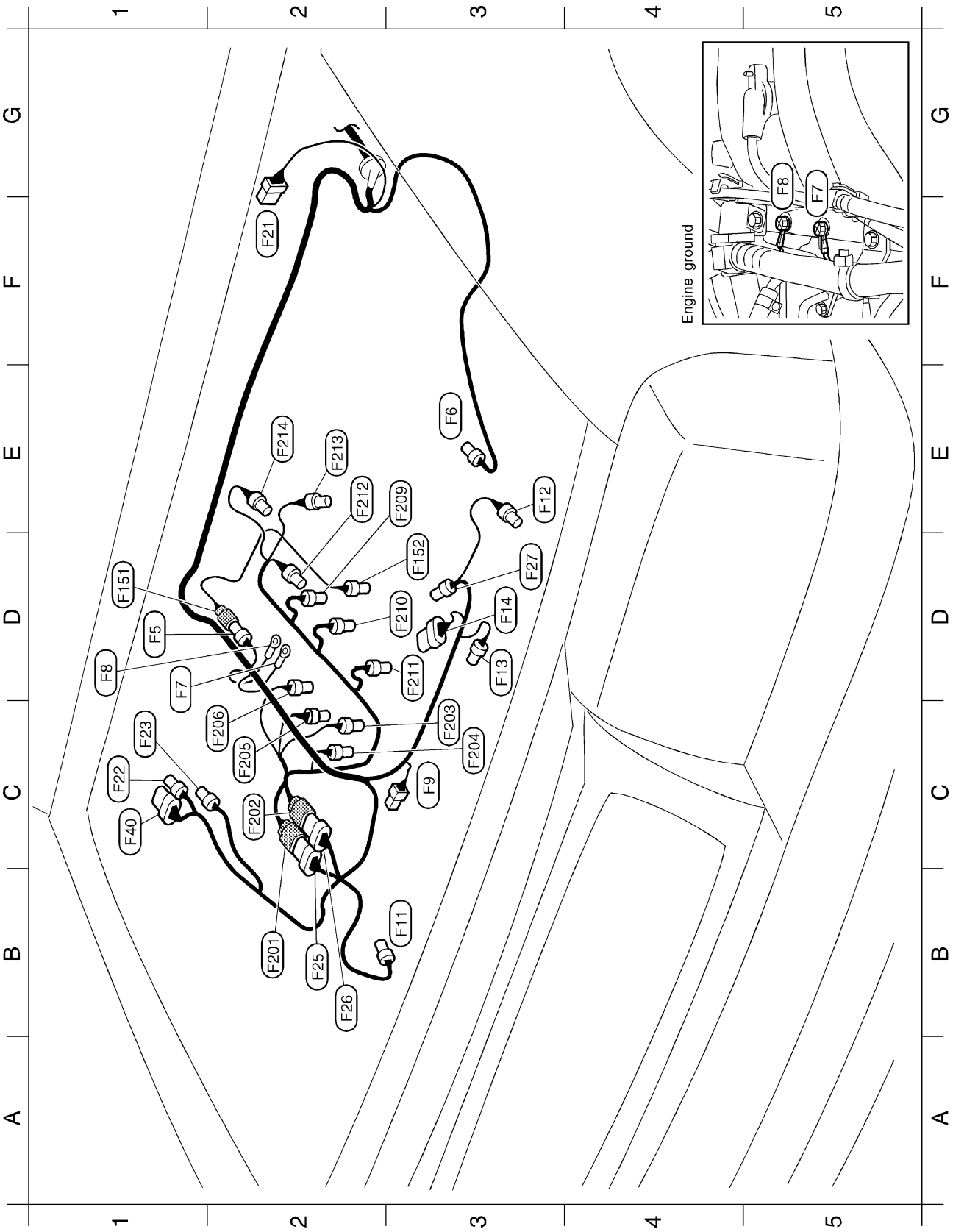

HEL970B

D1	F5	GY/2	:	To F151
E3	F6	BR/4	:	Mass air flow sensor
D1	F7	—	:	Engine ground
D1	F8	—	:	Engine ground
C3	F9	B/1	:	Thermal transmitter
B3	F11	B/2	:	Power steering oil pressure switch
E3	F12	B/1	:	Compressor
D3	F13	GY/2	:	Distributor
D3	F14	GY/6	:	Distributor
F2	F21	W/6	:	Wiper motor
C1	F22	GY/3	:	Heated oxygen sensor 1 (Bank 1)
C1	F23	GY/3	:	Heated oxygen sensor 1 (Bank 2)
B2	F25	SB/8	:	To F201
B2	F26	GY/8	:	To F202
D3	F27	BR/3	:	Throttle position sensor
C1	F40	GY/8	:	To E227
B2	F201	SB/8	:	To F25
C2	F202	GY/8	:	To F26
C3	F203	GY/2	:	Engine coolant temperature sensor
C3	F204	B/2	:	Injector No.1
C2	F205	B/2	:	Injector No.3
C2	F206	B/2	:	Injector No.5
E3	F209	B/2	:	Injector No.6
D3	F210	B/2	:	Injector No.4
D3	F211	B/2	:	Injector No.2
E2	F212	BR/2	:	IACV-AAC valve
E2	F213	GY/2	:	IACV-FICD solenoid valve
E2	F214	B/2	:	EVAP canister purge volume control solenoid valve

Sub-harness

D1	F151	GY/2	:	To F5
D3	F152	GY/2	:	Knock sensor

PASSENGER COMPARTMENT

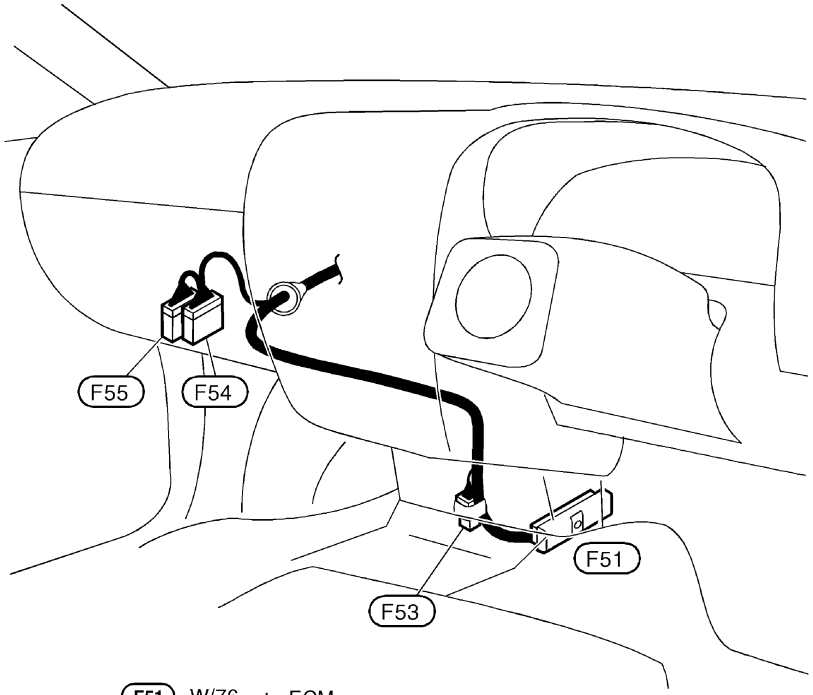

F51	W/76	:	ECM
F53	GY/6	:	Joint connector-1
F54	W/24	:	To M48
F55	W/16	:	To M47

Engine Control Harness (Cont'd)

ENGINE COMPARTMENT — YD ENGINE (RHD models)

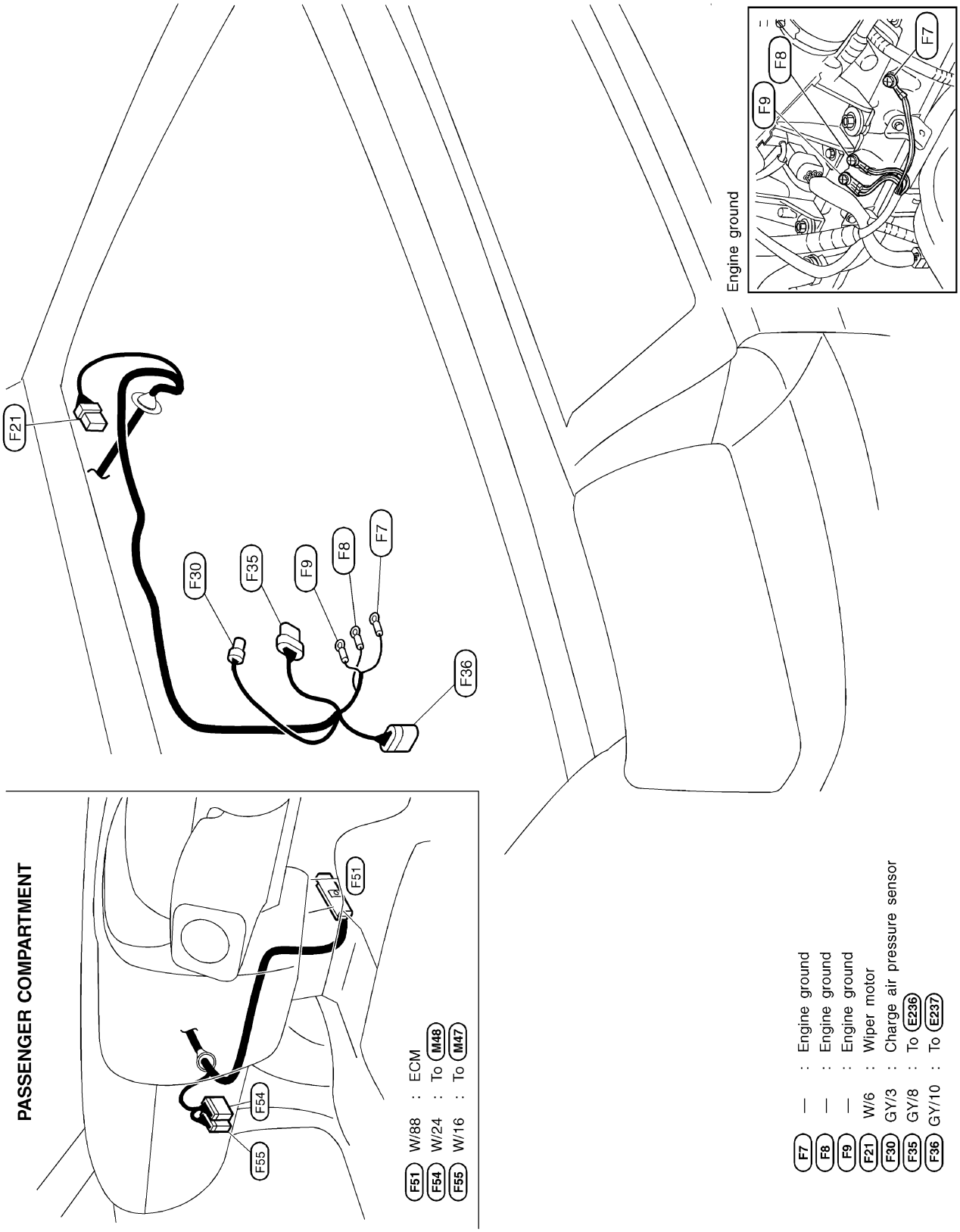

HEL972B

Engine Harness

VG ENGINE

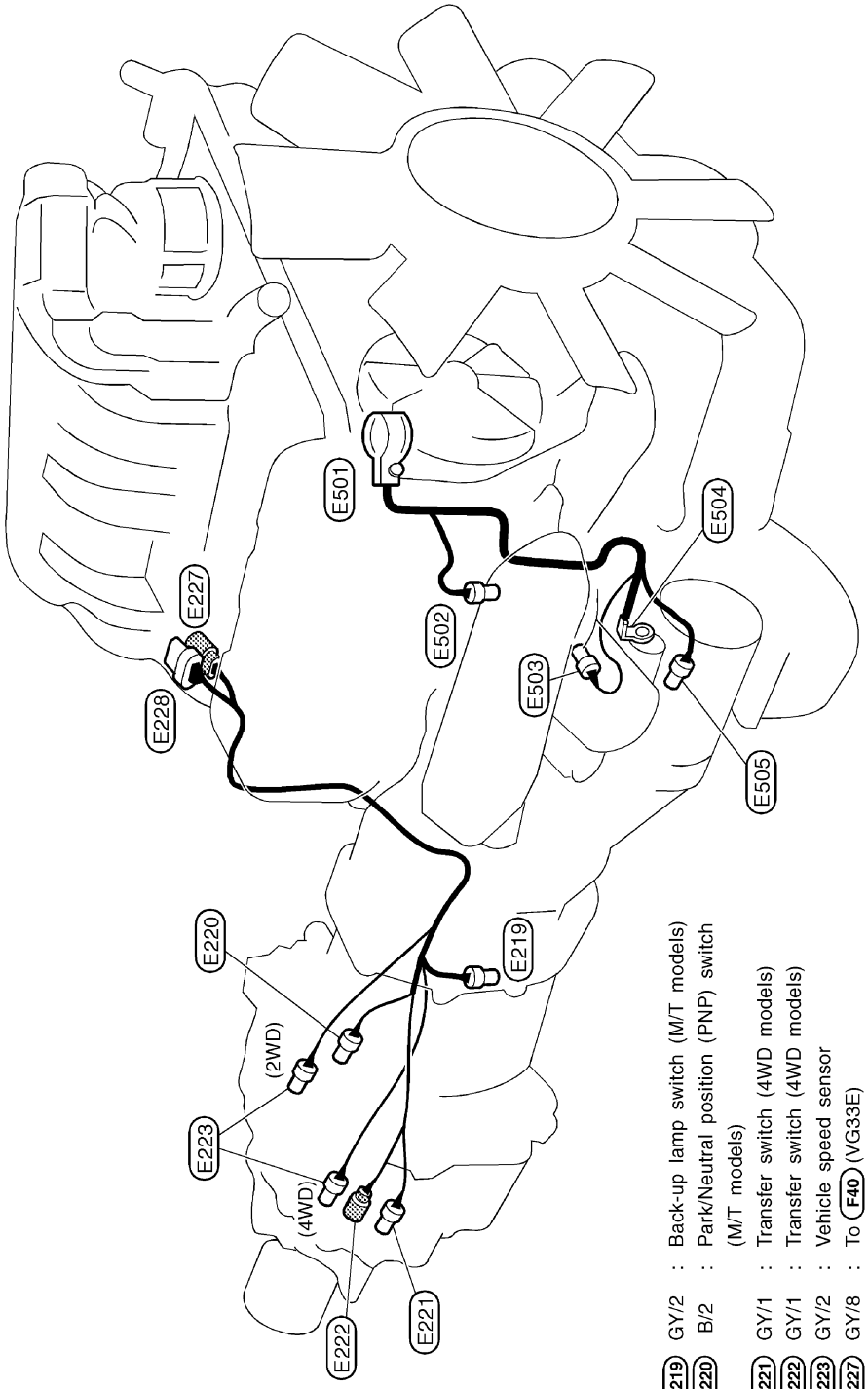

E219	GY/2	:	Back-up lamp switch (M/T models)
E220	B/2	:	Park/Neutral position (PNP) switch (M/T models)
E221	GY/1	:	Transfer switch (4WD models)
E222	GY/1	:	Transfer switch (4WD models)
E223	GY/2	:	Vehicle speed sensor
E227	GY/8	:	To F40 (VG33E)
E228	SB/8	:	To F24 (VG30E)

Starter motor sub-harness

E501	—	:	Battery
E502	GY/2	:	To E29
E503	GY/1	:	Oil pressure switch
E504	—	:	Starter motor
E505	GY/1	:	Starter motor

HEL973B

Engine Harness (Cont'd)

TD AND QD ENGINES

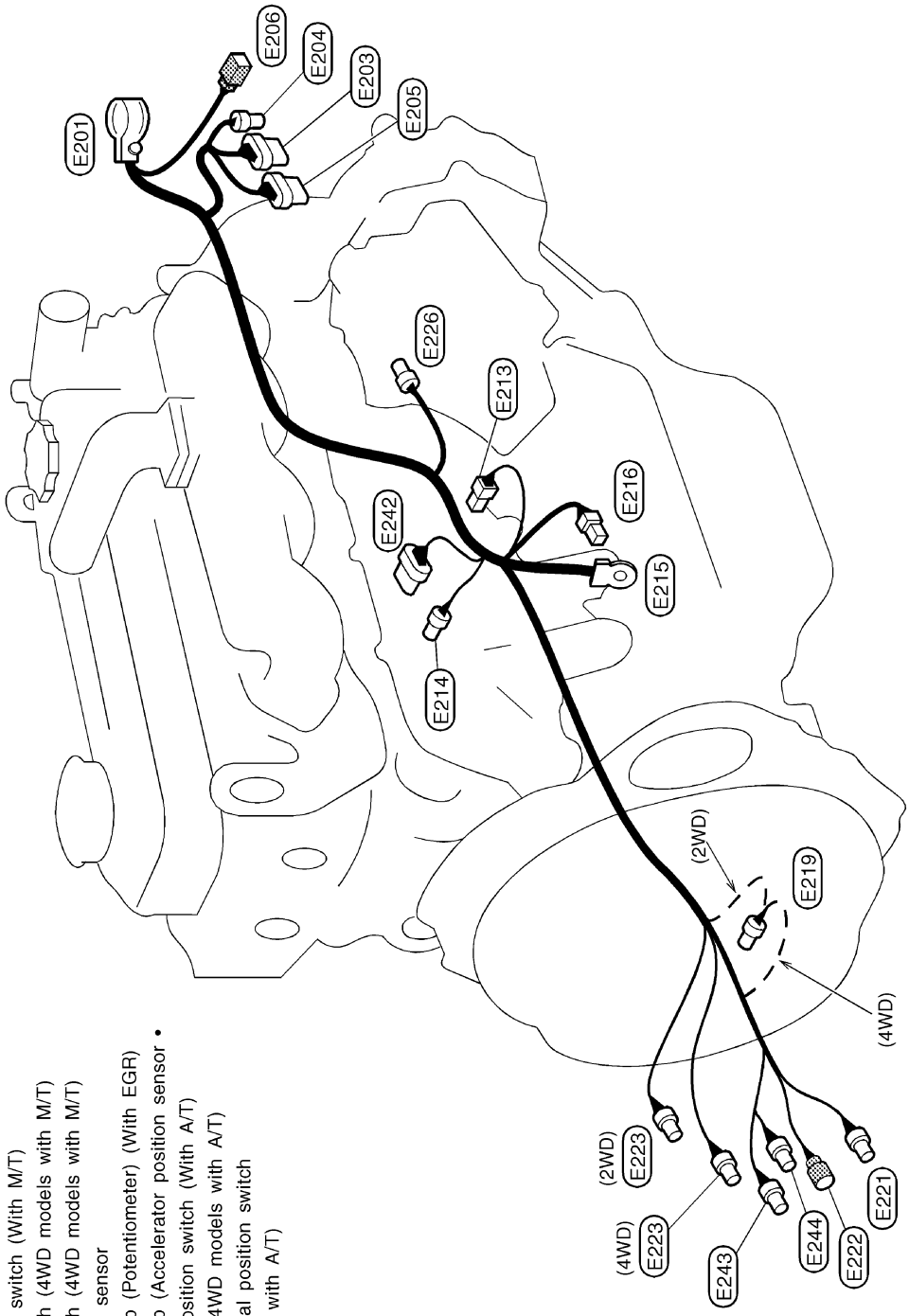

E201	—	:	Battery
E203	GY/8	:	To E30 (With A/T or with EGR)
E204	GY/2	:	To E29
E205	SB/8	:	To E33
E206	B/1	:	To E35
E213	B/1	:	Oil pressure switch
E214	GY/2	:	Injection pump (Fuel cut solenoid valve • Solenoid timer)
E215	—	:	Starter motor
E216	B/1	:	Starter motor
E219	GY/2	:	Back-up lamp switch (With M/T)
E221	GY/1	:	Transfer switch (4WD models with M/T)
E222	GY/1	:	Transfer switch (4WD models with M/T)
E223	GY/2	:	Vehicle speed sensor
E226	GY/3	:	Injection pump (Potentiometer) (With EGR)
E242	GY/6	:	Injection pump (Accelerator position sensor • Accelerator position switch (With A/T)
E243	GY/2	:	4WD switch (4WD models with A/T)
E244	B/2	:	Transfer neutral position switch (4WD models with A/T)

HEL047C

Alternator Harness

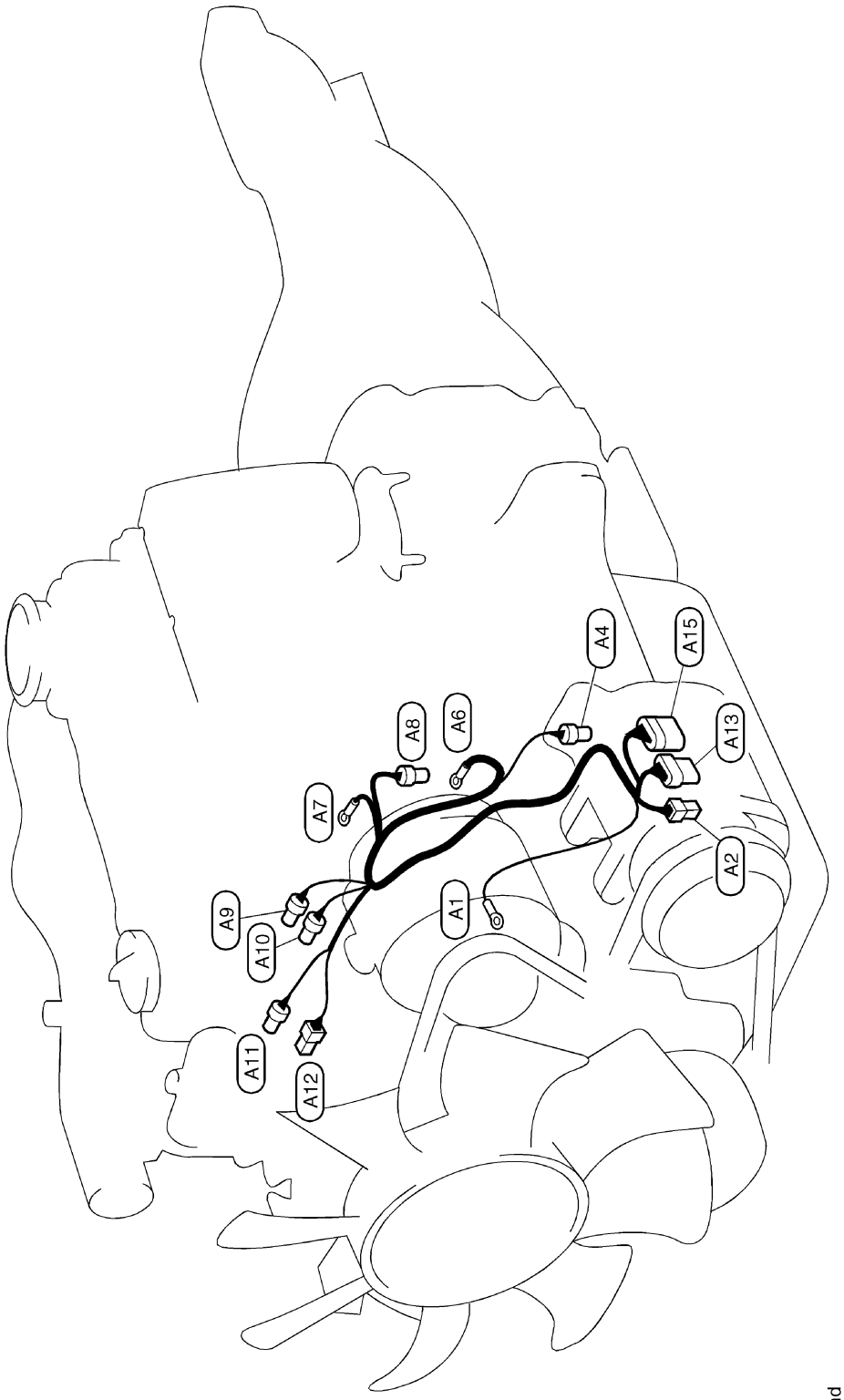

A1	—	:	Body ground
A2	B/2	:	To E17
A4	B/1	:	Compressor
A6	—	:	Alternator (B)
A7	—	:	Alternator (E)
A8	GY/2	:	Alternator (S,L)
A9	GY/2	:	Not used (With A/T)
A10	BR/2	:	Engine revolution sensor
A11	GY/2	:	Engine coolant temperature sensor
A12	B/1	:	Thermal transmitter
A13	GY/8	:	To E68 (With M/T)
A15	GY/10	:	To E75 (With A/T)

Body ground

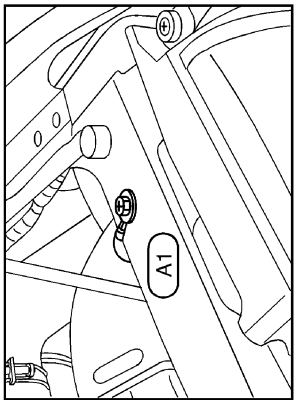

HEL048C

Instrument Harness

LHD MODELS

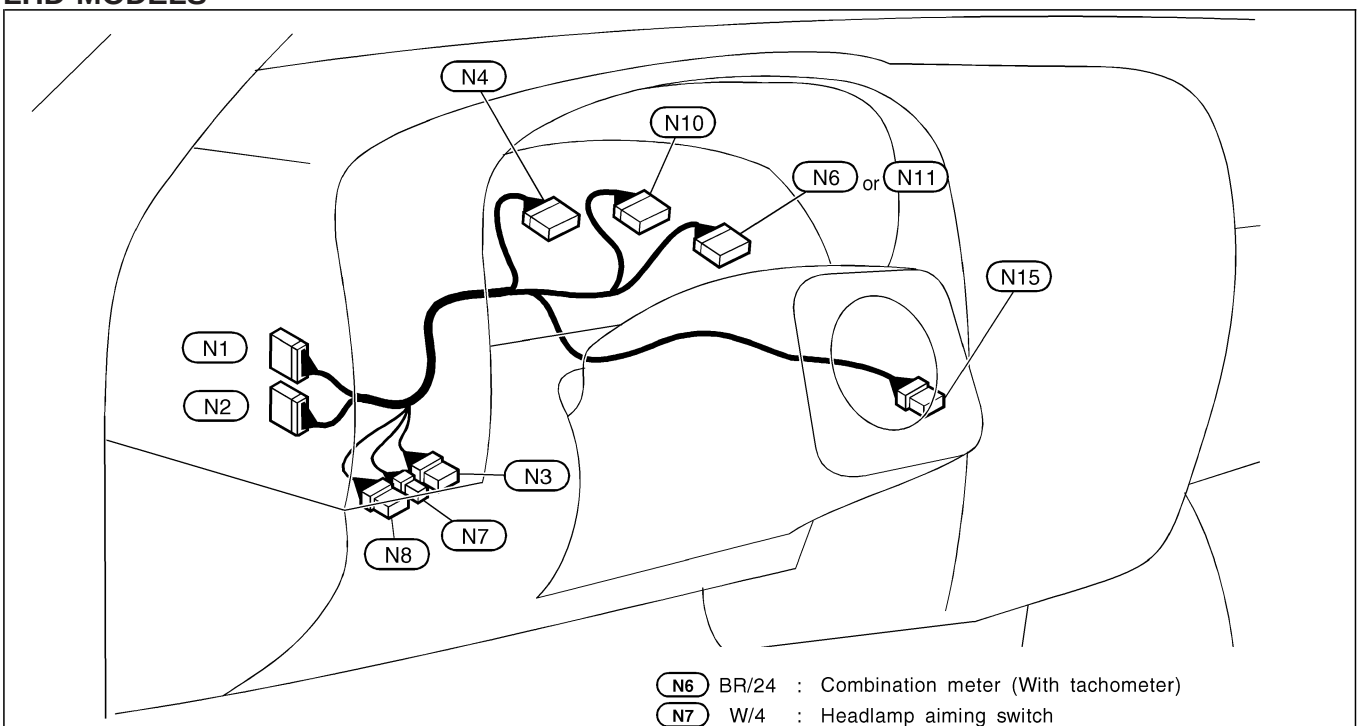

N1 W/24 : To M6
N2 BR/24 : To M7
N3 W/6 : Heat up switch (With M/T except with tachometer for the Middle East)
N4 W/24 : Combination meter (With tachometer)
N6 BR/24 : Combination meter (With tachometer)
N7 W/4 : Headlamp aiming switch (For Europe and the Middle East)
N8 BR/8 : Headlamp washer switch (For Europe)
N10 BR/20 : Combination meter (Without tachometer)
N11 W/24 : Combination meter (Without tachometer)
N15 W/8 : A/T mode switch (QD engine with A/T)

HEL049C

Chassis Harness and Tail Harness

Tail harness

T1	W/6	:	Rear combination lamp RH (A-chassis models or with smooth rear body except for Europe, Australia and China)
T2	W/8	:	Rear combination lamp RH (For Europe, Australia and China except A-chassis models or with regular rear body)
T3	GY/2	:	License plate lamp RH (With step bumper)
T4	SB/8	:	To C7
T5	GY/2	:	License plate lamp RH (Without step bumper)
T6	GY/2	:	License plate lamp LH (Without step bumper)
T7	B/2	:	License plate lamp LH (With step bumper)
T8	W/6	:	Rear combination lamp LH (A-chassis models or with smooth rear body except for Europe, Australia and China)
T9	W/8	:	Rear combination lamp LH (For Europe, Australia and China except A-chassis models or with regular rear body)
T10	GY/2	:	Rear fog lamp (RHD A-chassis models for Europe)
T12	GY/2	:	Rear fog lamp (LHD A-chassis models for Europe)

Chassis harness

C2	W/6	:	To M112 (With ABS)
C3	GY/5	:	Fuel level sensor unit and fuel pump
C5	SB/4	:	To rear wheel sensor sub-harness (For ABS) (4WD models and 2WD models with LT30 rear brake)
C6	GY/2	:	Rear wheel sensor (For ABS) (2WD models with LT26B rear brake)
C7	SB/8	:	To T4
C9	W/16	:	To M121
C10	BR/2	:	High-mounted stop lamp (With guard bar)

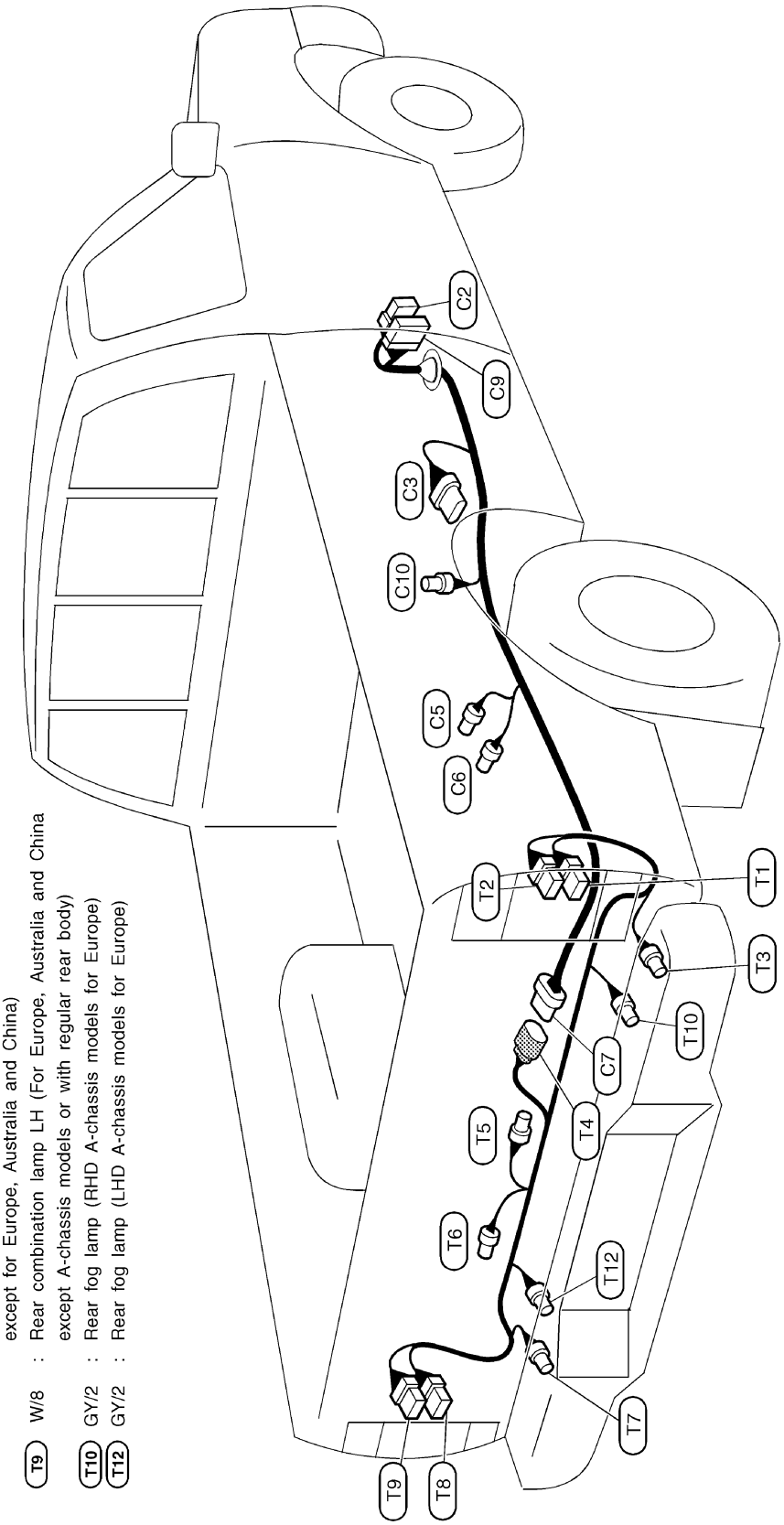

HEL974B

Room Lamp Harness/LHD Models

DOUBLE CAB

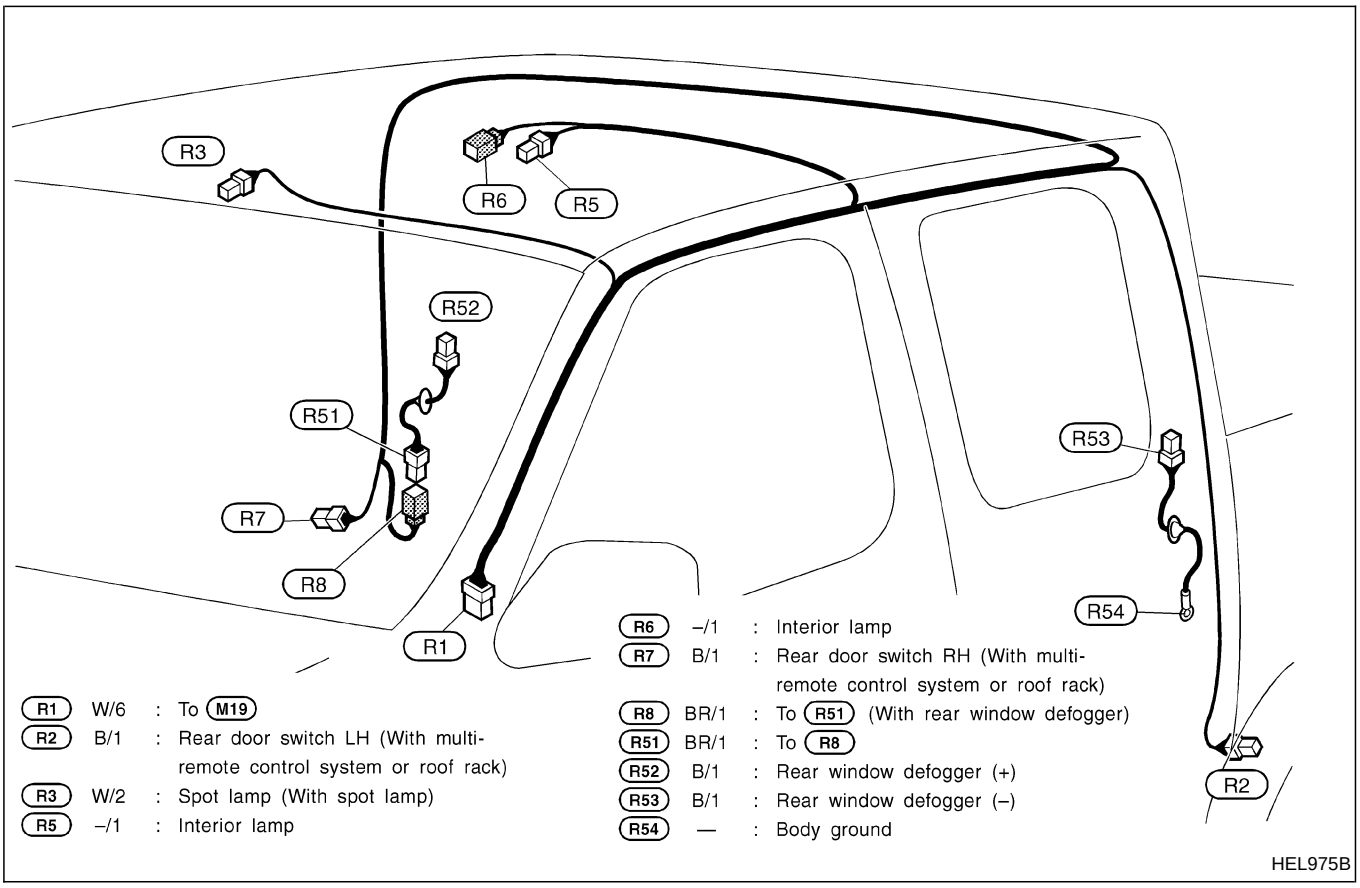

Room Lamp Harness/RHD Models

DOUBLE CAB

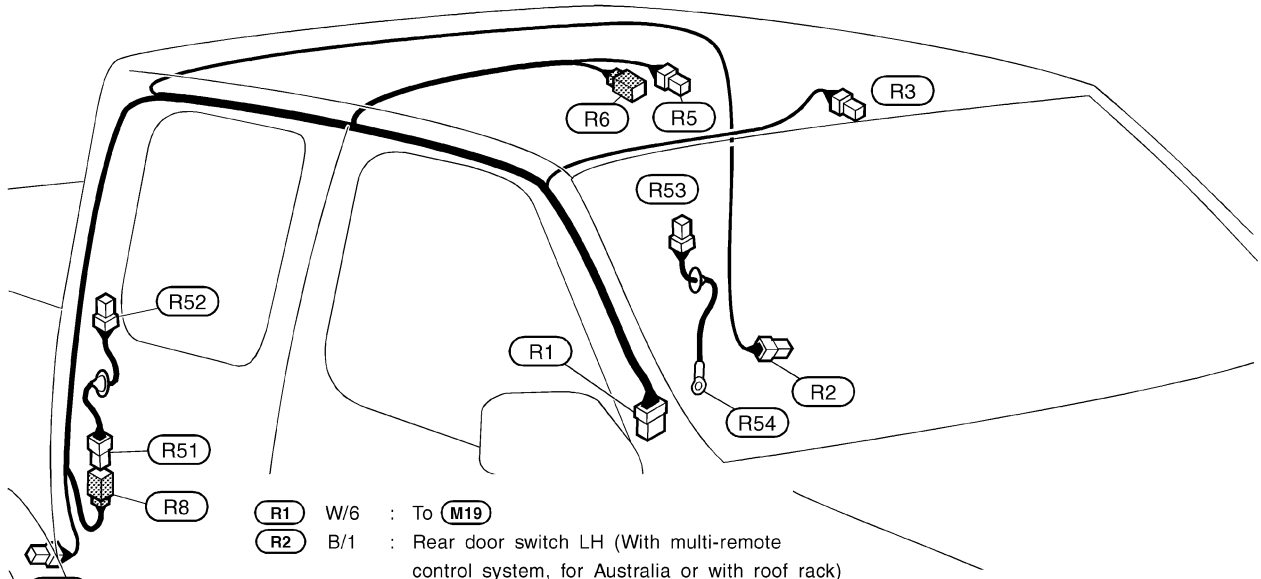

R1	W/6	:	To M19
R2	B/1	:	Rear door switch LH (With multi-remote control system, for Australia or with roof rack)
R3	W/2	:	Spot lamp (With spot lamp)
R5	–/1	:	Interior lamp
R6	–/1	:	Interior lamp
R7	B/1	:	Rear door switch RH (With multi-remote control system, for Australia or with roof rack)
R8	BR/1	:	To R51 (With rear window defogger)
R51	BR/1	:	To R8
R52	B/1	:	Rear window defogger (+)
R53	B/1	:	Rear window defogger (–)
R54	—	:	Body ground

HEL976B

Use the chart below to find out what each wiring diagram code stands for.
Refer to the wiring diagram code in the alphabetical index to find the location (page number) of each wiring diagram.

Code	Section	Wiring Diagram Name
AAC/V	EC	IACV-AAC Valve
A/C, A	HA	Auto Air Conditioner
A/C, M	HA	Manual Air Conditioner
A/CCUT	EC	Air Conditioner Control
AIRREG	EC	IACV-Air Regulator
APS	AT	Accelerator Position Sensor
AUDIO	EL	Audio
BACK/L	EL	Back-up Lamp
BA/FTS	AT	BATT/A/T Fluid Temperature Sensor and TCM Power Supply
CHARGE	EL	Charging System
CHIME	EL	Warning Chime
CMPS	EC	Camshaft Position Sensor
COOL/F	LC, EC	Cooling Fan Control
ECTS	EC	Engine Coolant Temperature Sensor
ENGSS	AT	Engine Speed Signal
F/FOG	EL	Front Fog Lamp
FICD	EC	IACV-FICD Solenoid Valve
F/PUMP	EC	Fuel Pump
GLOW	EC	Quick-glow System
H/AIM	EL	Headlamp Aiming Control
IGN/SG	EC	Ignition Signal
ILL	EL	Illumination
INJECT	EC	Injector
KS	EC	Knock Sensor
LOAD	EC	Electric Load Signal
LPSV	AT	Line Pressure Solenoid Valve
MAFS	EC	Mass Air Flow Sensor
MAIN	EC, AT	Main Power Supply and Ground Circuit
METER	EL	Speedometer, Tachometer, Temp. and Fuel Gauges

Code	Section	Wiring Diagram Name
MIL/DL	EC	MIL and Data Link Connectors
NATS	EL	Nissan Anti-theft System
NONDTC	AT	Non-detectable Items
O2H1B1	EC	Heated Oxygen Sensor 1 Heater Bank 1
O2H1B2	EC	Heated Oxygen Sensor 1 Heater Bank 2
O2S1B1	EC	Heated Oxygen Sensor 1 Bank 1
O2S1B2	EC	Heated Oxygen Sensor 1 Bank 2
OVRCSV	AT	Overrun Clutch Solenoid Valve
PGC/V	EC	EVAP Canister Purge Control Solenoid Valve
PNP/SW	EC	Park/Neutral Position Switch
POWER	EL	Power Supply Routing
PST/SW	EC	Power Steering Oil Pressure Switch
R/FOG	EL	Rear Fog Lamp
ROOM/L	EL	Interior Room Lamp
SSV/A	AT	Shift Solenoid Valve A
SSV/B	AT	Shift Solenoid Valve B
SRS	RS	Supplemental Restraint System
S/SIG	EC	Start Signal
START	EL	Starting System
TAIL/L	EL	Parking, License and Tail Lamps
TCV	AT	Torque Converter Clutch Solenoid Valve
TPS	EC	Throttle Position Sensor
VSS	EC	Vehicle Speed Sensor
VSSA/T	AT	Vehicle Speed Sensor A/T (Revolution Sensor)
VSSMTR	AT	Vehicle Speed Sensor Meter
WARN	EL	Warning Lamps