Go to SUP 2

ELECTRICAL SYSTEM

SECTION EL

MODIFICATION NOTICE:
Wiring diagrams have been changed.

CONTENTS

PRECAUTIONS 3
Supplemental Restraint System (SRS) "AIR BAG" and "SEAT BELT PRE-TENSIONER"....3
POWER SUPPLY ROUTING....4
Schematic 4
Wiring Diagram - POWER - 5
BATTERY....12
Service Data and Specifications (SDS)....12
STARTING SYSTEM 13
Wiring Diagram - START -/M/T Models....13
Wiring Diagram - START -/RHD A/T Models 14
Construction....15
Removal and Installation 15
Service Data and Specifications (SDS)....16
CHARGING SYSTEM....17
Wiring Diagram - CHARGE -/Diesel Engine 17
Wiring Diagram - CHARGE - (KA & Z engine) 18
Construction....19
Removal and Installation 19
Service Data and Specifications (SDS)....20
HEADLAMP 21
Aiming Adjustment/For the Middle East and Australia....21
Low Beam....21
STOP LAMP 22
Wiring Diagram - STOP/L - 22
BACK-UP LAMP....23
Wiring Diagram - BACK/L -/M/T Models 23
Wiring Diagram - BACK/L -/A/T Models....24
ILLUMINATION....25
Wiring Diagram - ILL -/LHD Models 25
Wiring Diagram - ILL -/RHD Models....27
METER AND GAUGES 29
Combination Meter 29
Wiring Diagram - METER -/Gasoline Engine with Tachometer 30
Wiring Diagram - METER -/Diesel Engine with Tachometer 32
WARNING LAMPS 34
Schematic 34
Wiring Diagram - WARN -/Gasoline Engine....35
Wiring Diagram - WARN -/Diesel Engine....43
A/T INDICATOR....48
Wiring Diagram - AT/IND -/RHD Models 48
HORN....49
Wiring Diagram - HORN - 49
AUDIO....50
Wiring Diagram - AUDIO -/LHD Models Type-1 50
Wiring Diagram - AUDIO -/LHD Models Type-3 51
Wiring Diagram - AUDIO -/RHD Models Except for EUROPE 53
AUDIO ANTENNA 54
Power Antenna/Wiring Diagram - P/ANT -....54
POWER DOOR MIRROR 55
Wiring Diagram - MIRROR -/LHD Models Except for The Middle East 55
REAR WINDOW DEFOGGER AND MIRROR DEFOGGER....56
Wiring Diagram - DEF -/LHD Models....56
LOCATION OF ELECTRICAL UNITS....57
Engine Compartment....57
Passenger Compartment....58
HARNESS LAYOUT 60
Main Harness....60
Engine Room Harness 66
Engine Control Harness 74
Engine Harness 76
Alternator Harness....80
Instrument Harness 81
Chassis Harness and Tail Harness 82
Front Door Harness (LH side)....83
BULB SPECIFICATIONS 84
Headlamp....84
Exterior Lamp 84

CONTENTS (Cont'd)

Interior Lamp.....84
WIRING DIAGRAM CODES (CELL CODES).....85
SUPER MULTIPLE JUNCTION (SMJ).....Foldout
Terminal Arrangement.....Foldout
CONTROL UNITS/JOINT CONNECTOR (J/C).....Foldout
Terminal Arrangement.....Foldout

Supplemental Restraint System (SRS) “AIR BAG” and “SEAT BELT PRE-TENSIONER”

The Supplemental Restraint System such as “AIR BAG” and “SEAT BELT PRE-TENSIONER” used along with a seat belt, helps to reduce the risk or severity of injury to the driver and front passenger in a frontal collision. The SRS system composition which is available to NISSAN MODEL D22 is as follows (The composition varies according to the destination and optional equipment.):
Driver air bag module (located in the center of the steering wheel), front passenger air bag module (located on the instrument panel on passenger side), seat belt pre-tensioner, a diagnosis sensor unit, warning lamp, wiring harness and spiral cable.
Information necessary to service the system safely is included in the **RS section** of this Service Manual.

WARNING:

- **To avoid rendering the SRS inoperative, which could increase the risk of personal injury or death in the event of a collision which would result in air bag inflation, all maintenance must be performed by an authorized NISSAN dealer.**
- **Improper maintenance, including incorrect removal and installation of the SRS, can lead to personal injury caused by unintentional activation of the system. For removal of Spiral Cable and Air Bag Module, see the RS section.**
- **Do not use electrical test equipment on any circuit related to the SRS unless instructed to in this Service Manual. Spiral Cable and wiring harnesses (except “SEAT BELT PRE-TENSIONER”) covered with yellow insulation either just before the harness connectors or for the complete harness are related to the SRS.**

Schematic

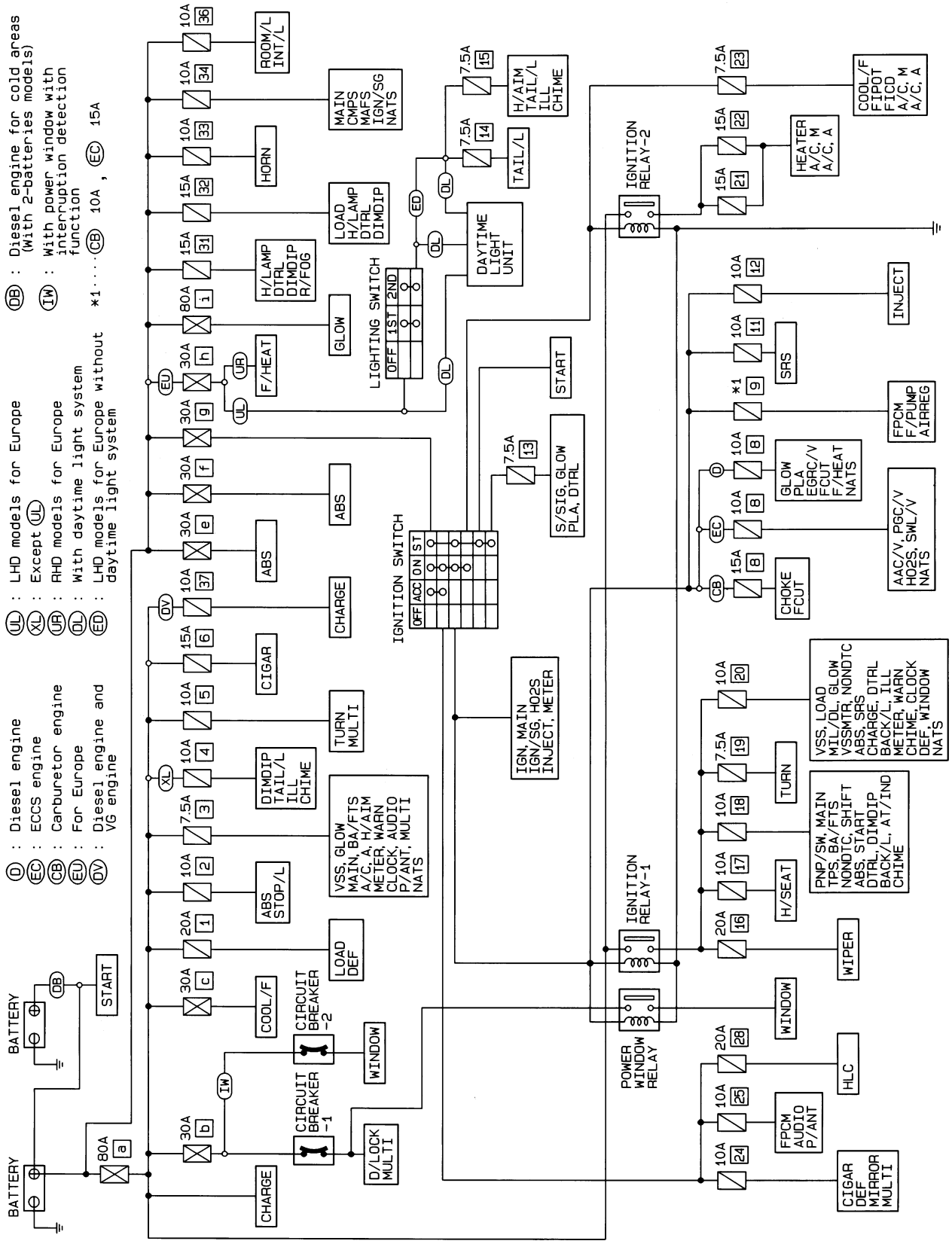

HEL528B

Wiring Diagram — POWER —

BATTERY POWER SUPPLY — IGNITION SWITCH IN ANY POSITION

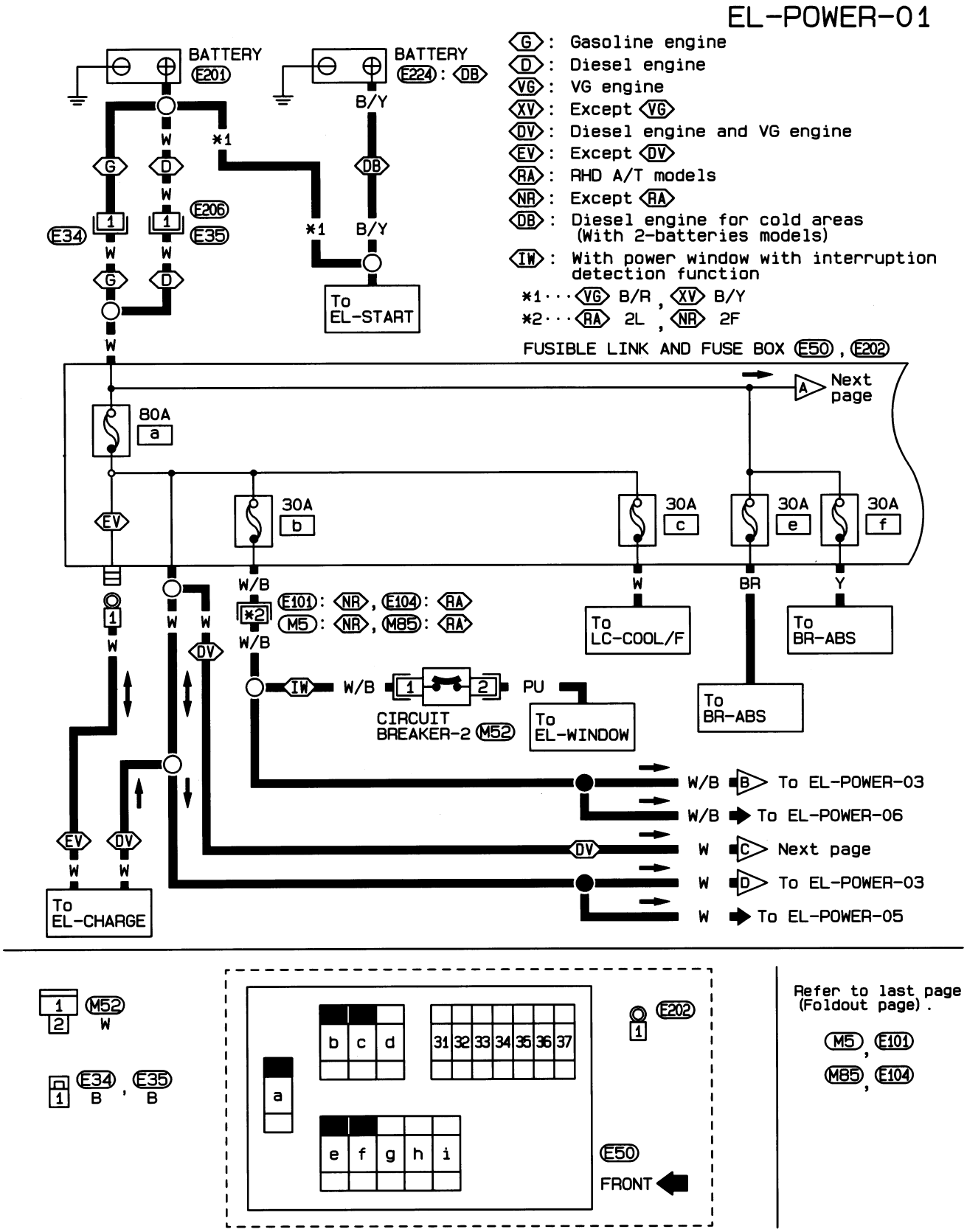

HEL529B

Wiring Diagram — POWER — (Cont'd)

EL-POWER-02

DV : Diesel engine and VG engine
UL : LHD models for Europe
UR : RHD models for Europe

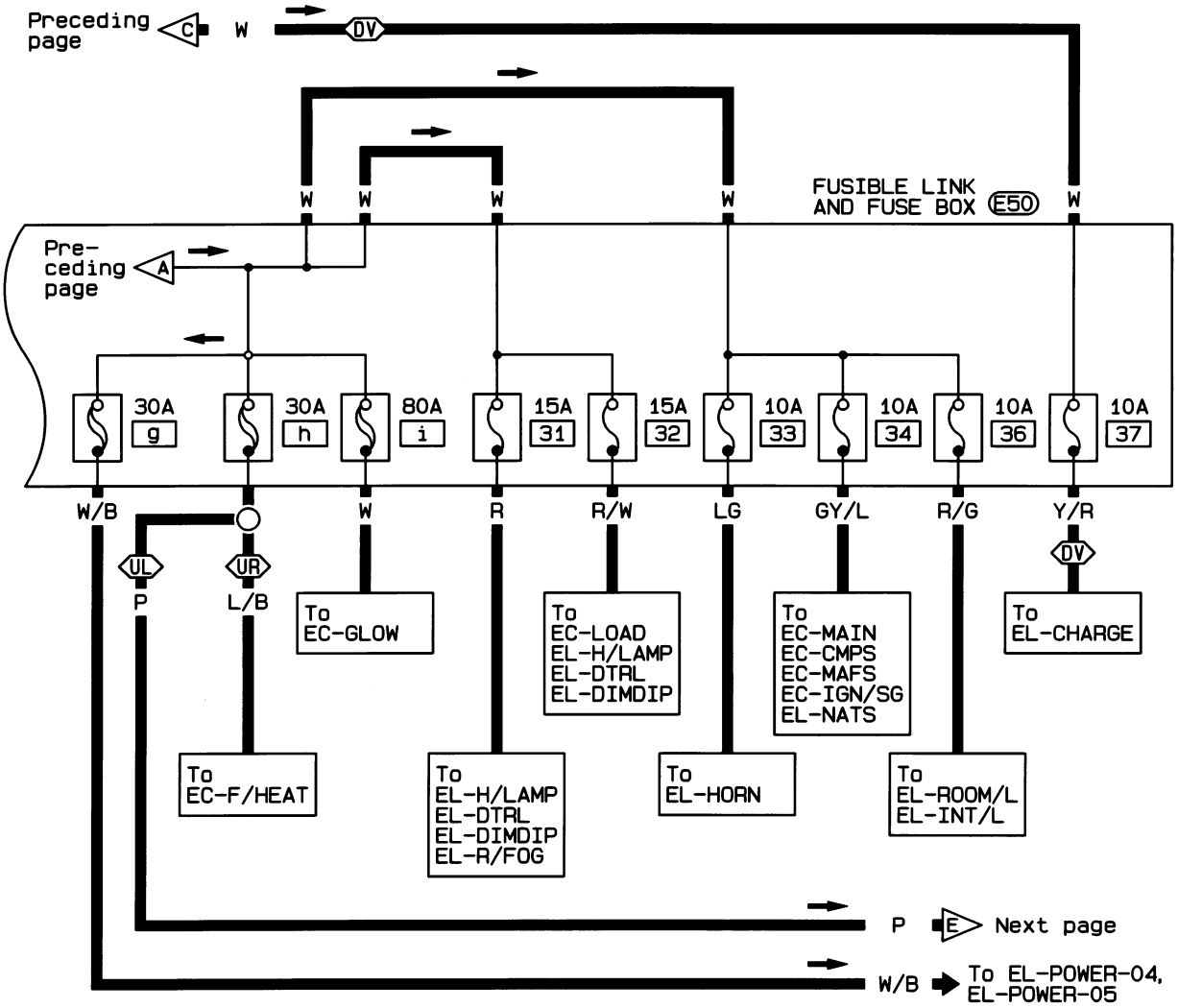

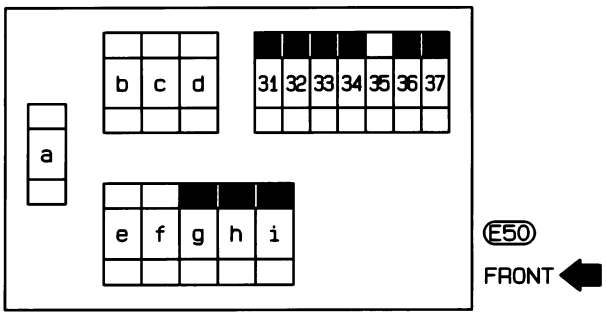

HEL263B

Wiring Diagram — POWER — (Cont'd)

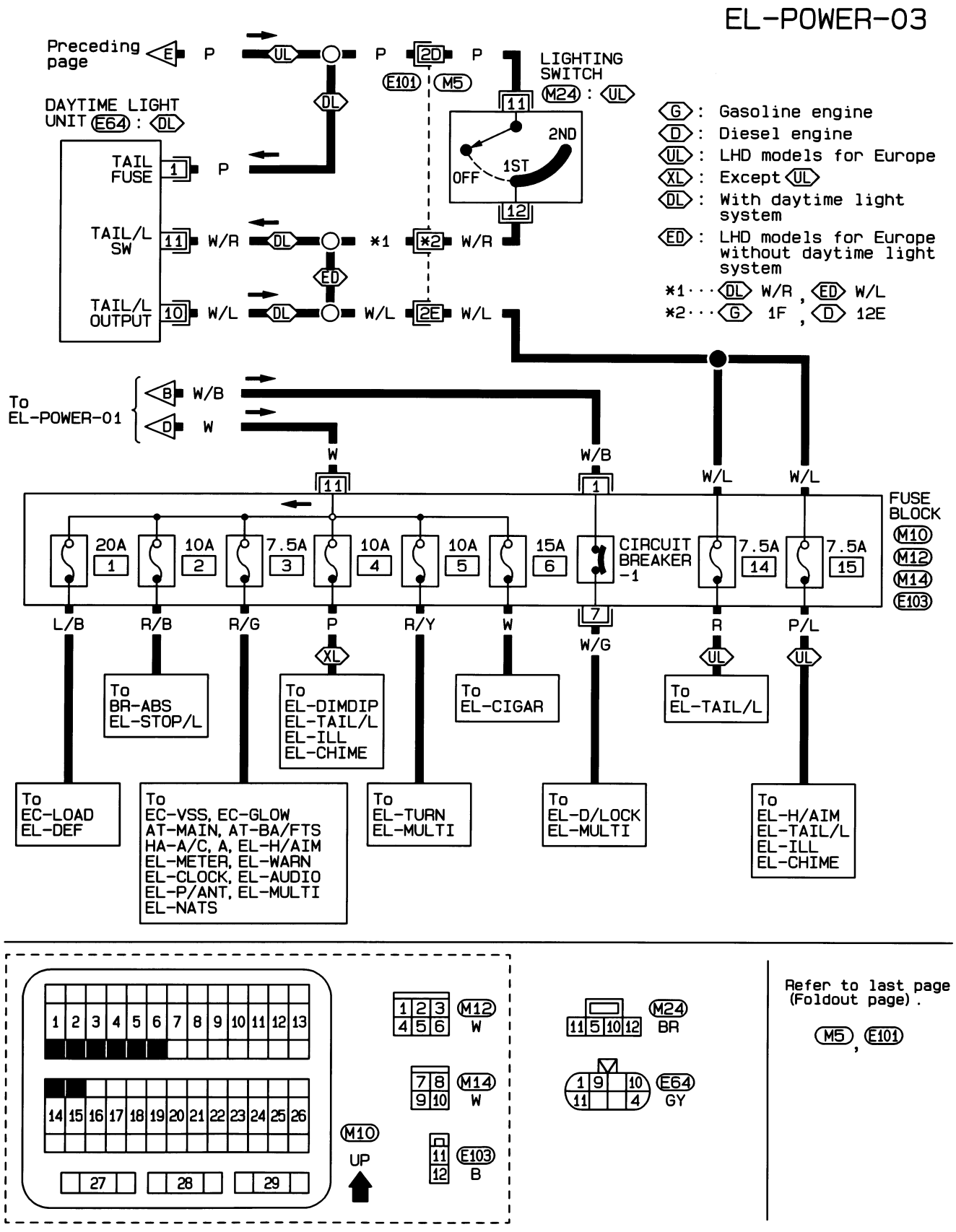

HEL672A

Wiring Diagram — POWER — (Cont'd)

ACCESSORY POWER SUPPLY — IGNITION SW. IN "ACC" OR "ON"

EL-POWER-04

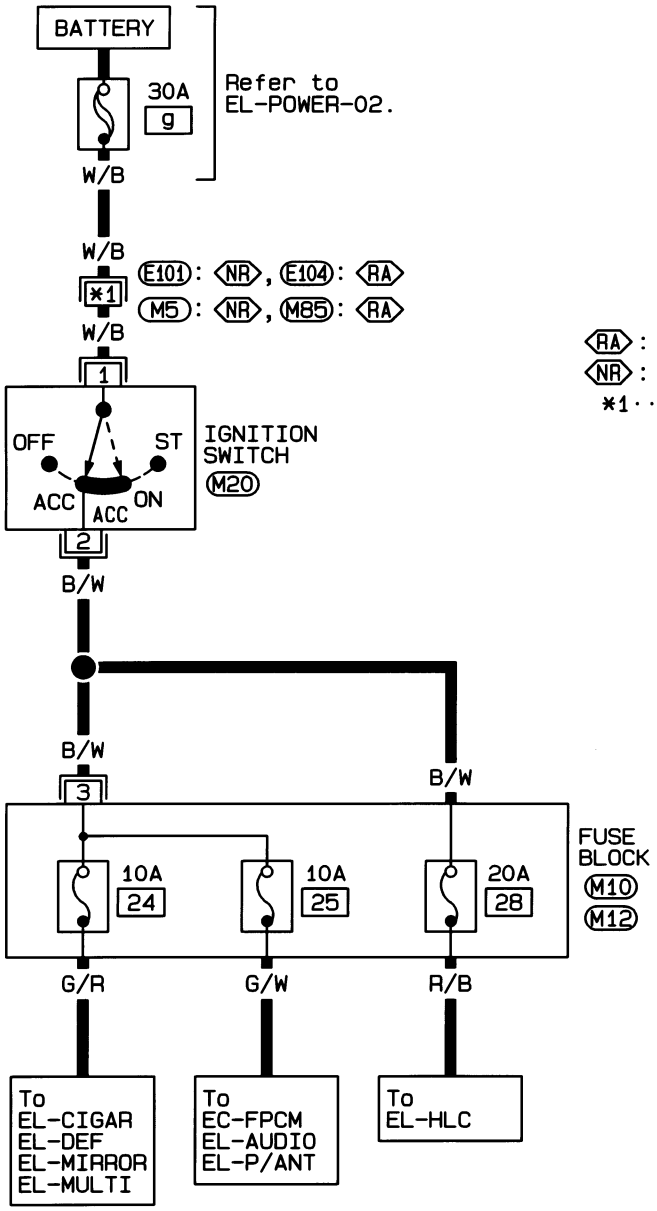

RA: RHD A/T models
NR: Except RA
*1···RA 2P , NR 11D

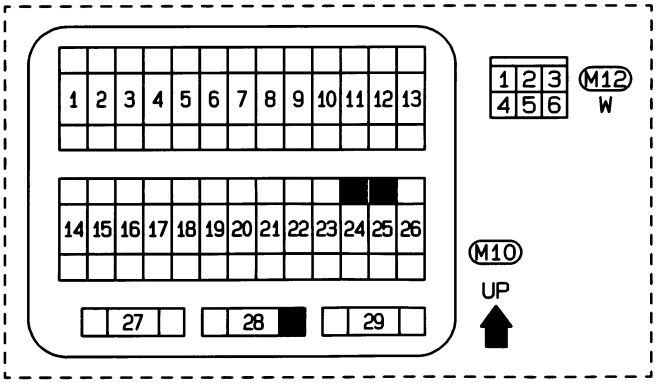

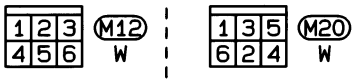

Refer to last page
(Foldout page).

M5, E101
M85, E104

HEL673A

Wiring Diagram — POWER — (Cont'd)

IGNITION POWER SUPPLY — IGNITION SW. IN "ON" AND/OR "START"

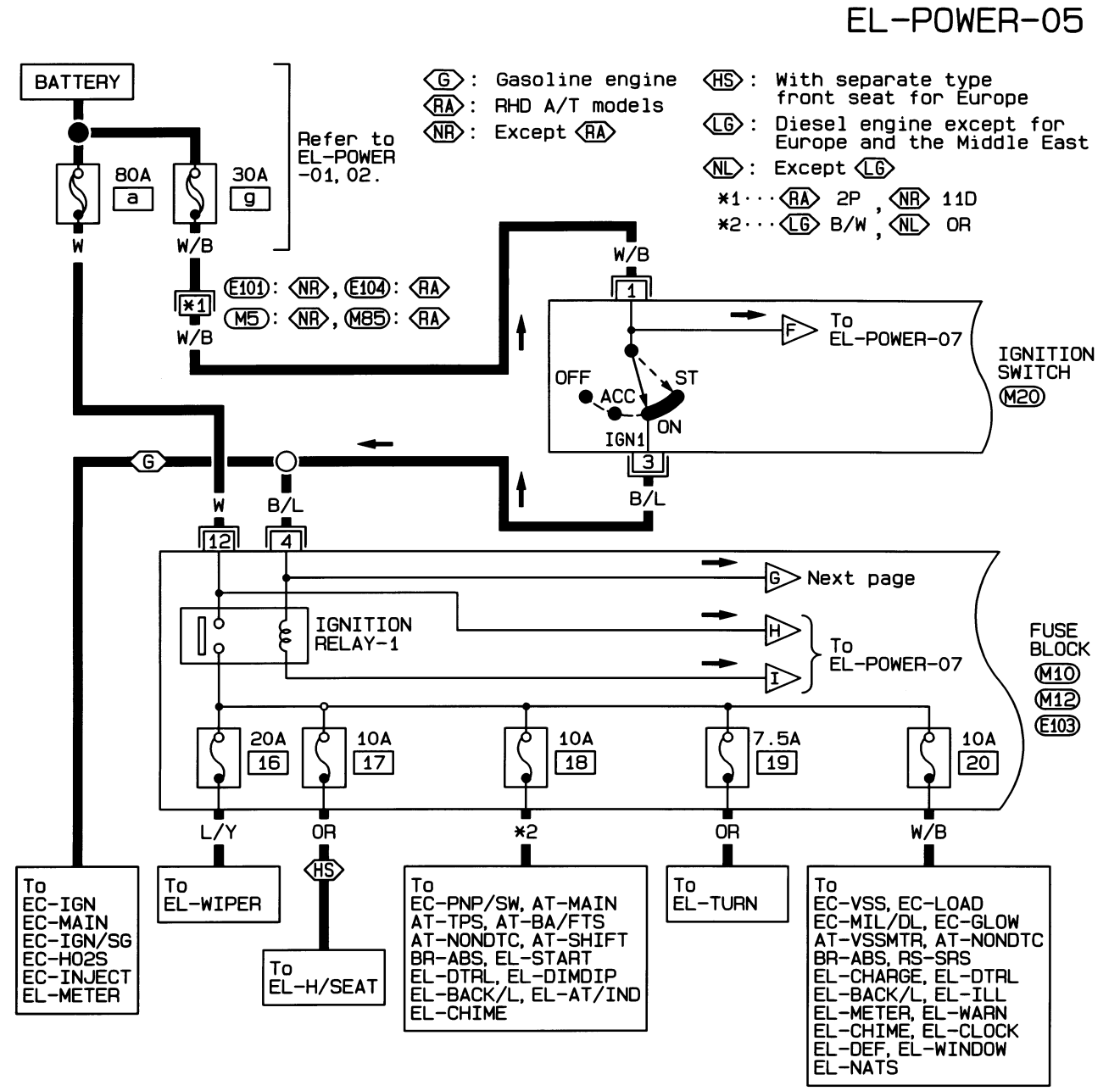

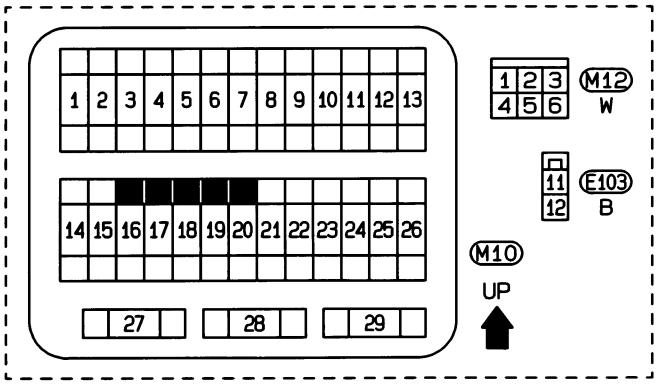

Refer to last page (Foldout page).

M5 , E101

M85 , E104

HEL674A

Wiring Diagram — POWER — (Cont'd)

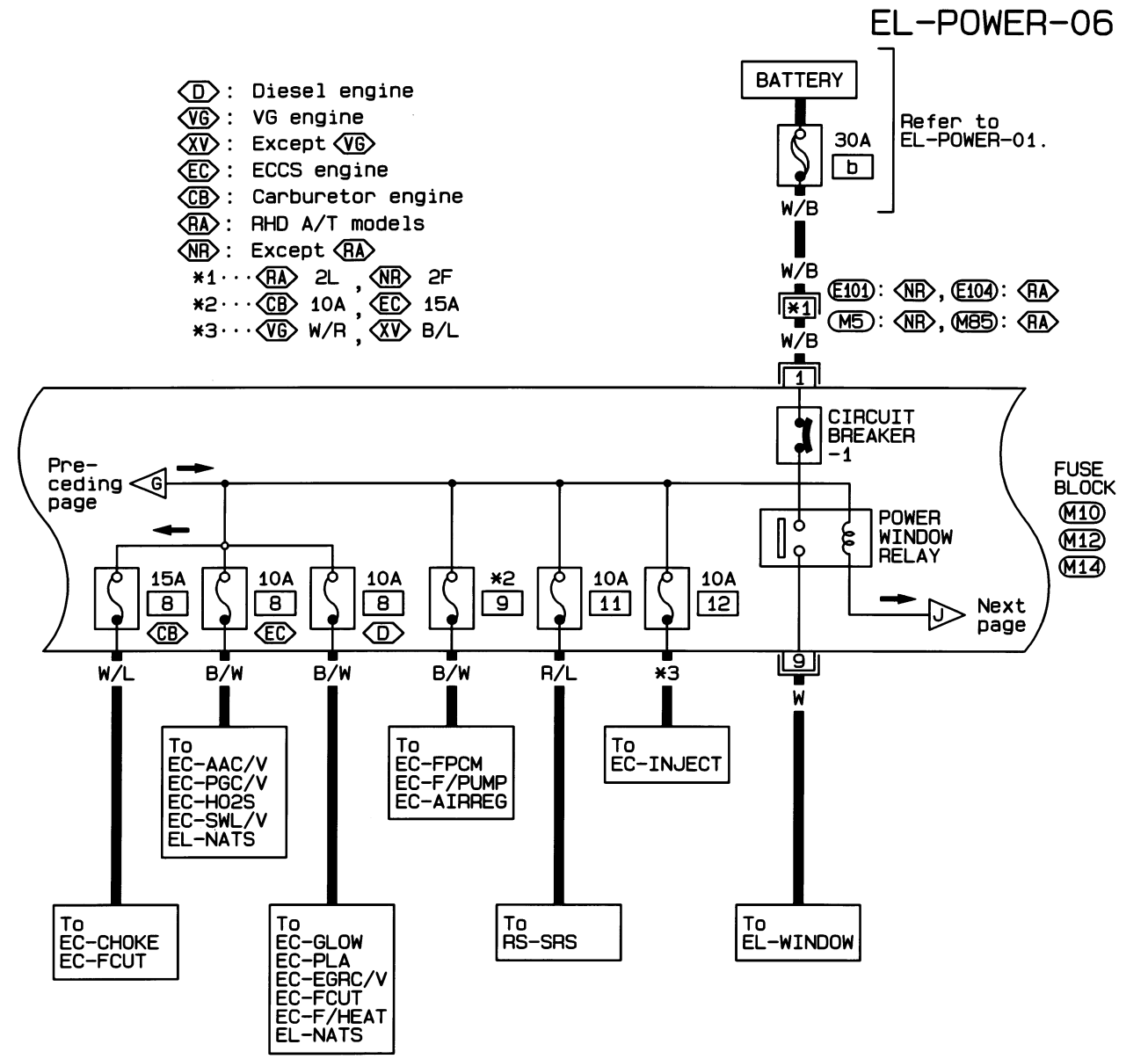

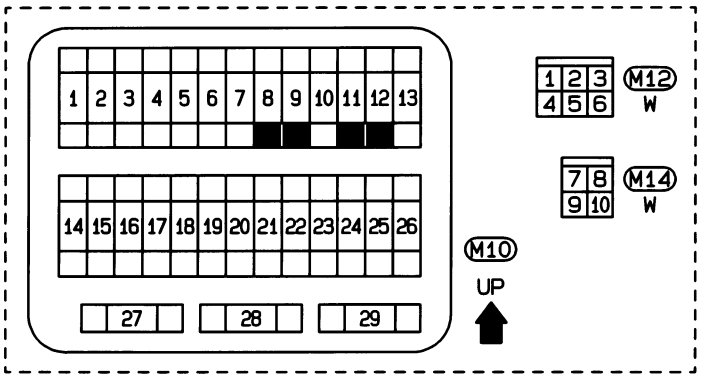

Refer to last page (Foldout page).

M5 , E101

M85 , E104

HEL264B

Wiring Diagram — POWER — (Cont'd)

EL-POWER-07

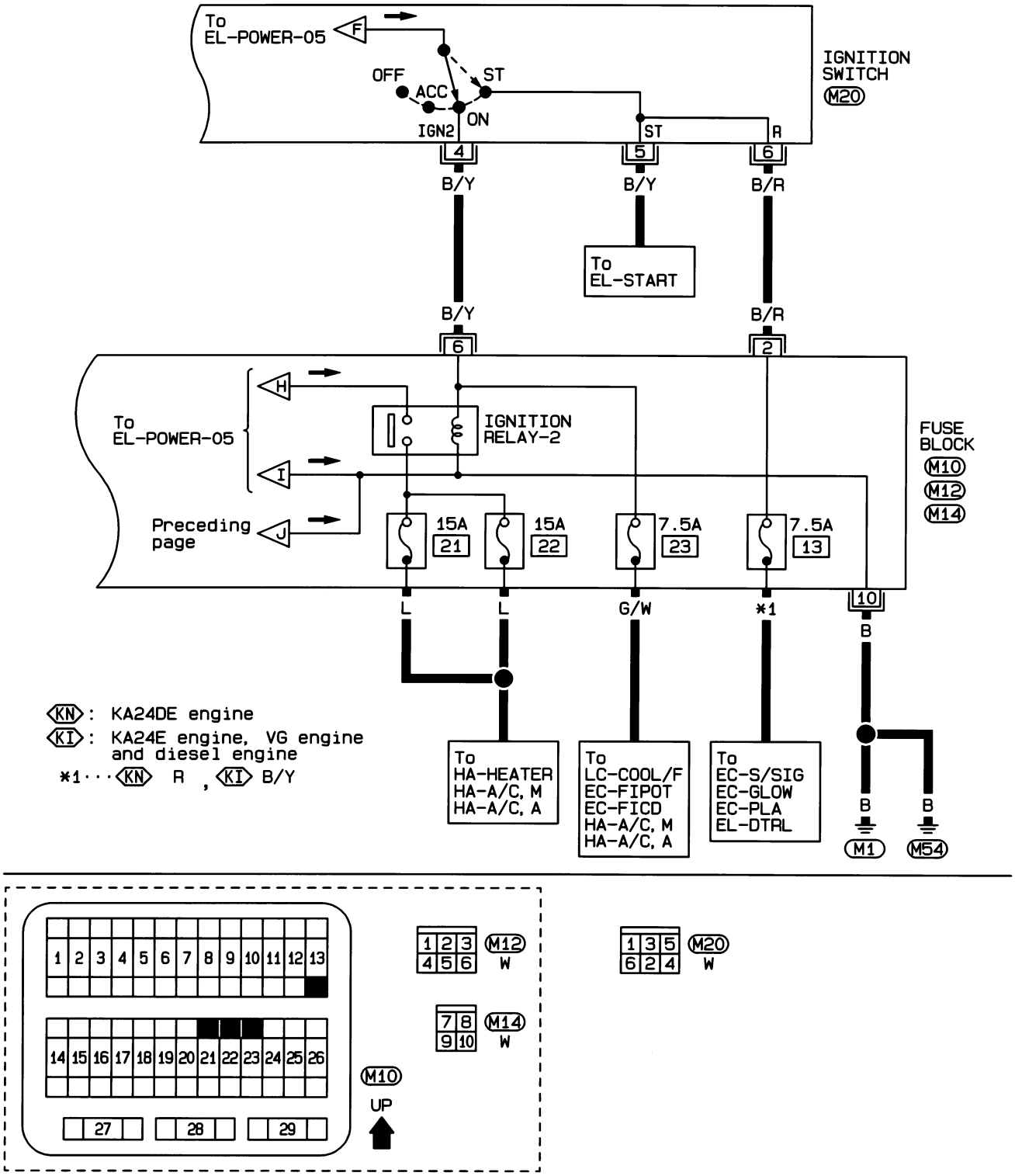

HEL265B

Service Data and Specifications (SDS)

Applied model		For Australia
		VG30E
		Standard
Type		55D23R
Capacity	V-AH	12-48

Wiring Diagram — START —/M/T Models

EL-START-01

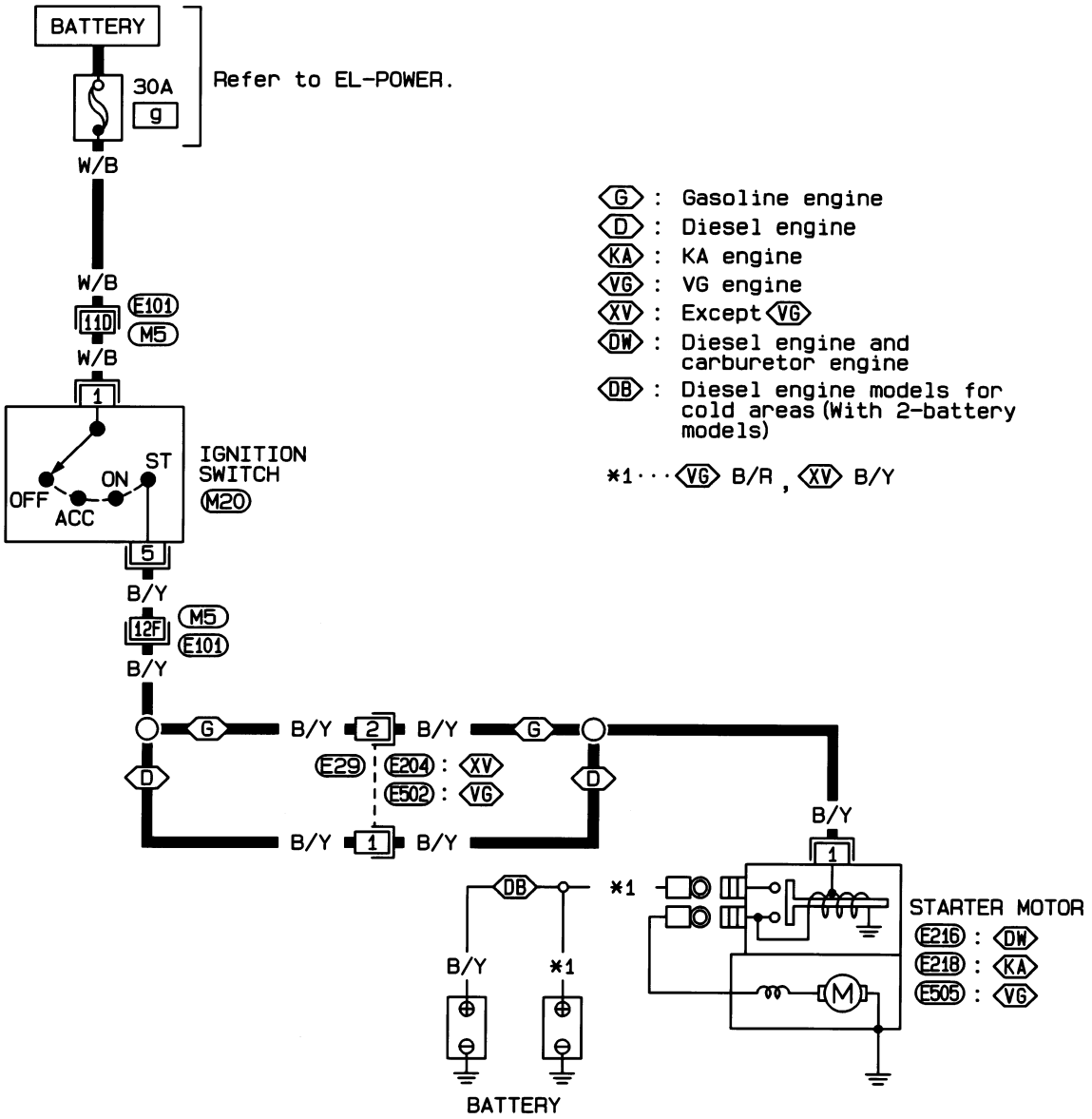

Refer to last page (Foldout page).

M5 , E101

HEL266B

Wiring Diagram — START —/RHD A/T Models

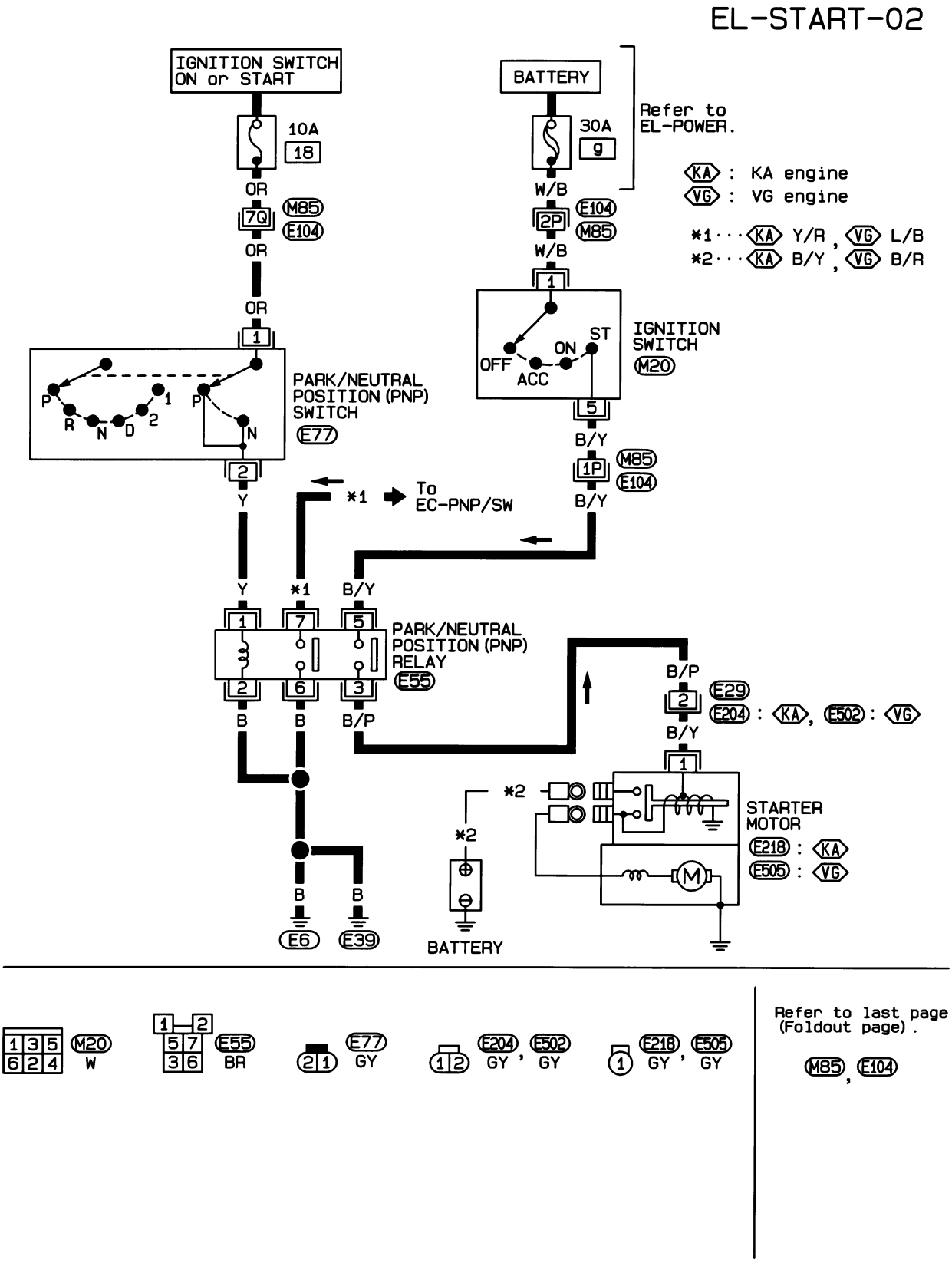

HEL267B

Construction

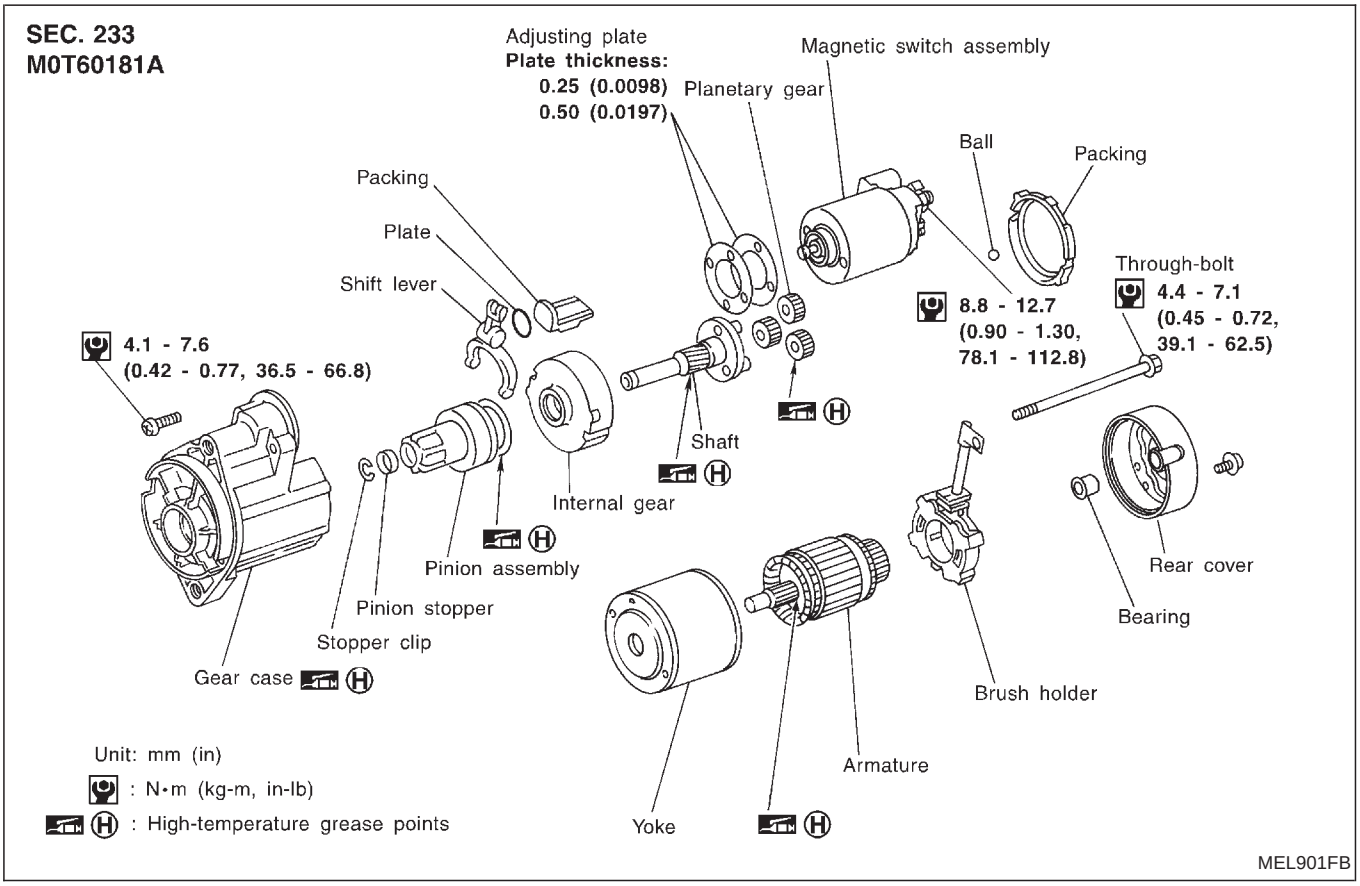

Removal and Installation

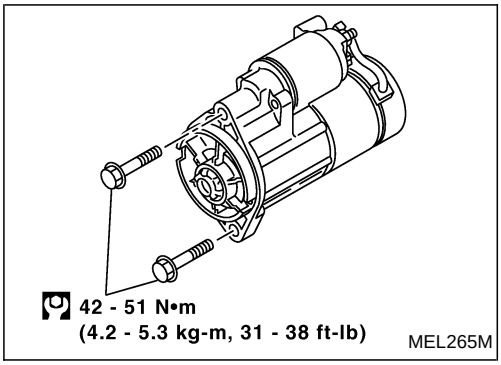

Service Data and Specifications (SDS)

STARTER

Type		M0T60181A
		MITSUBISHI make
		Reduction gear type
Applied model		VG30E
		Standard
System voltage	V	12
No-load		
Terminal voltage	V	11.0
Current	A	Less than 90
Revolution	rpm	More than 2,500
Minimum diameter of commutator	mm (in)	28.8 (1.134)
Minimum length of brush	mm (in)	7.0 (0.276)
Brush spring tension	N (kg, lb)	18.3 - 24.8 (1.87 - 2.53, 4.12 - 5.58)
Movement "ℓ" in height of pinion assembly	mm (in)	0.5 - 2.0 (0.020 - 0.079)

*: Not include the current of the magnet switch circuit

Wiring Diagram — CHARGE —/Diesel Engine

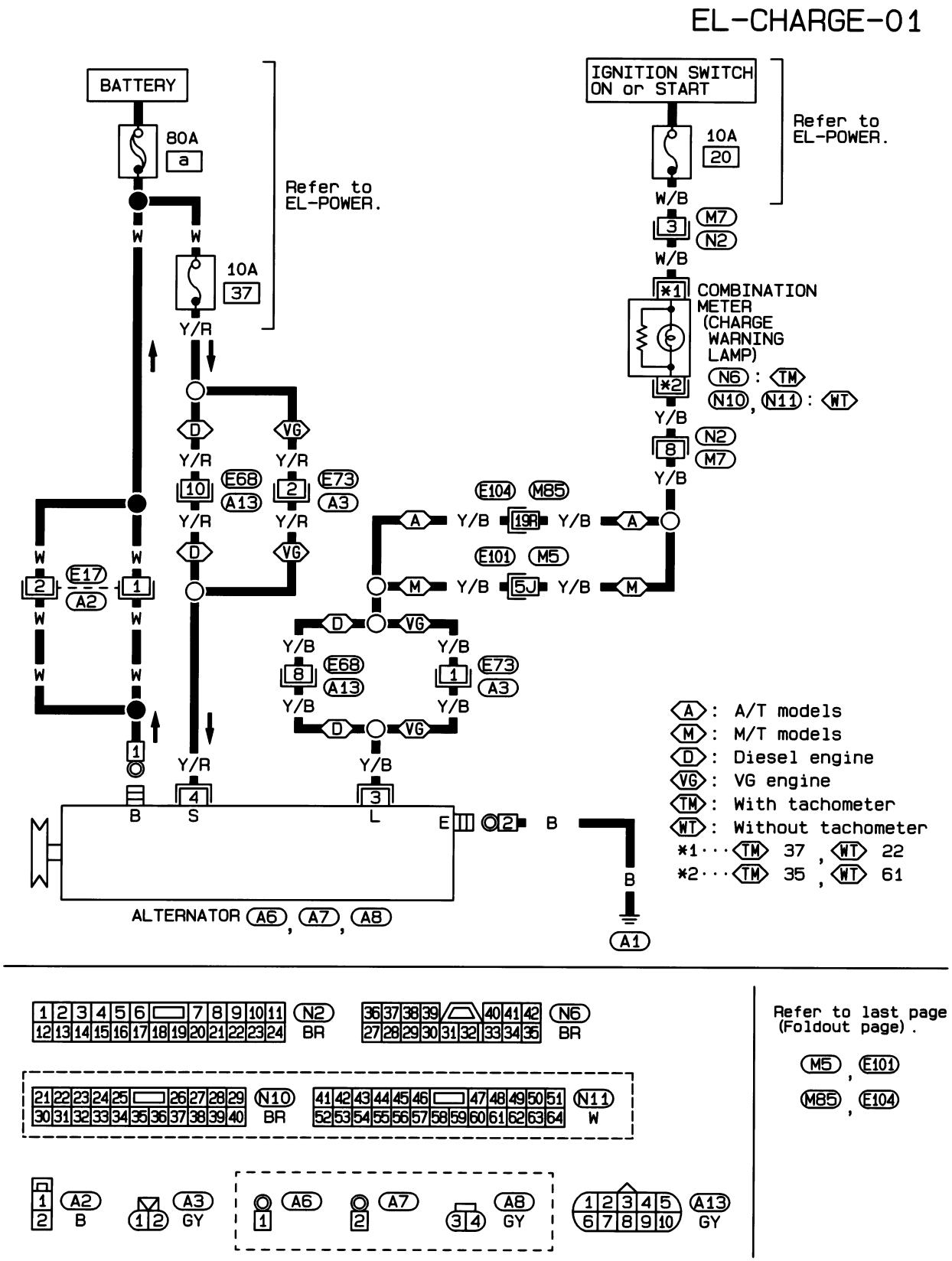

HEL269B

Wiring Diagram — CHARGE — (KA & Z engine)

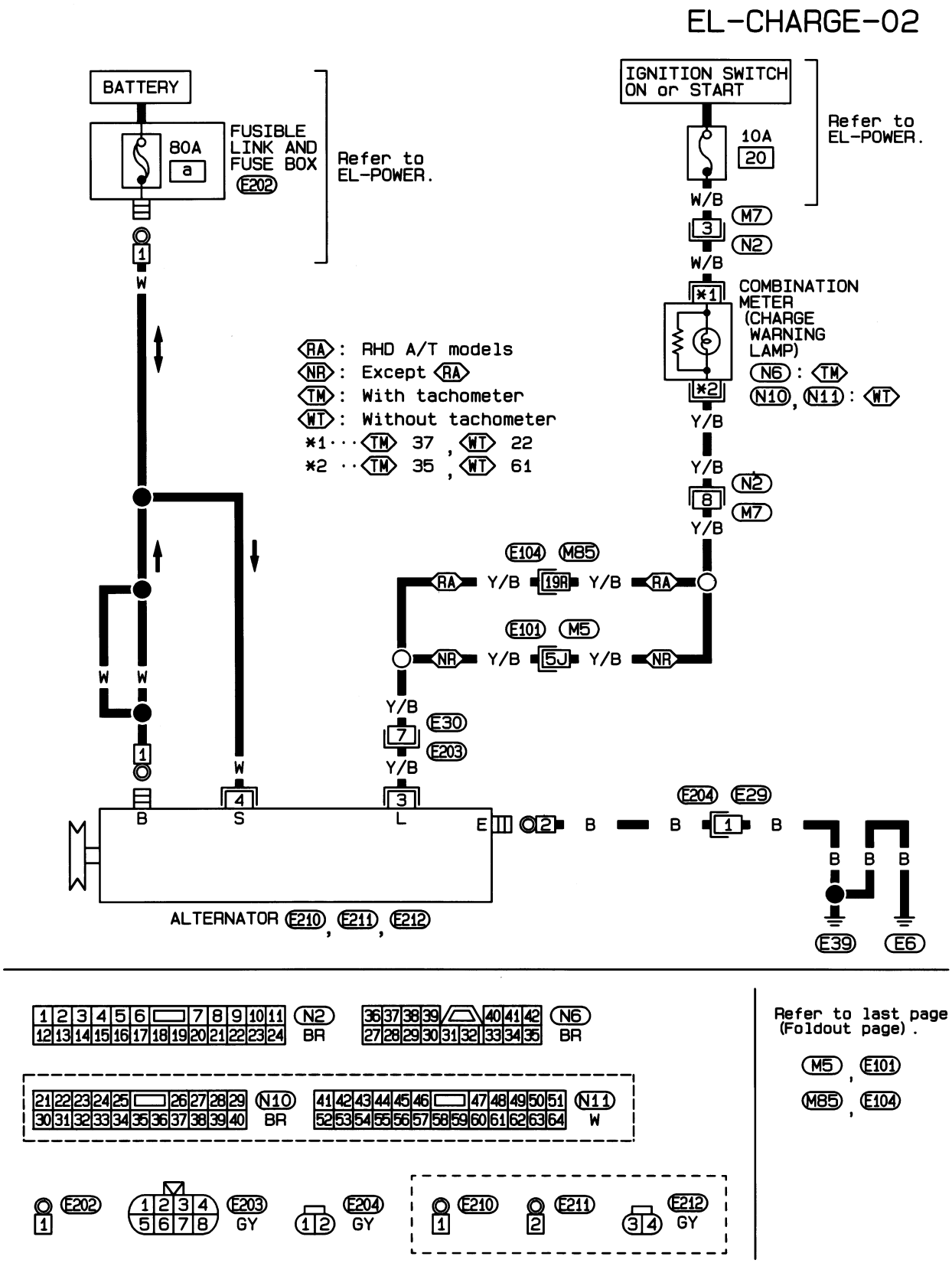

HEL530B

Construction

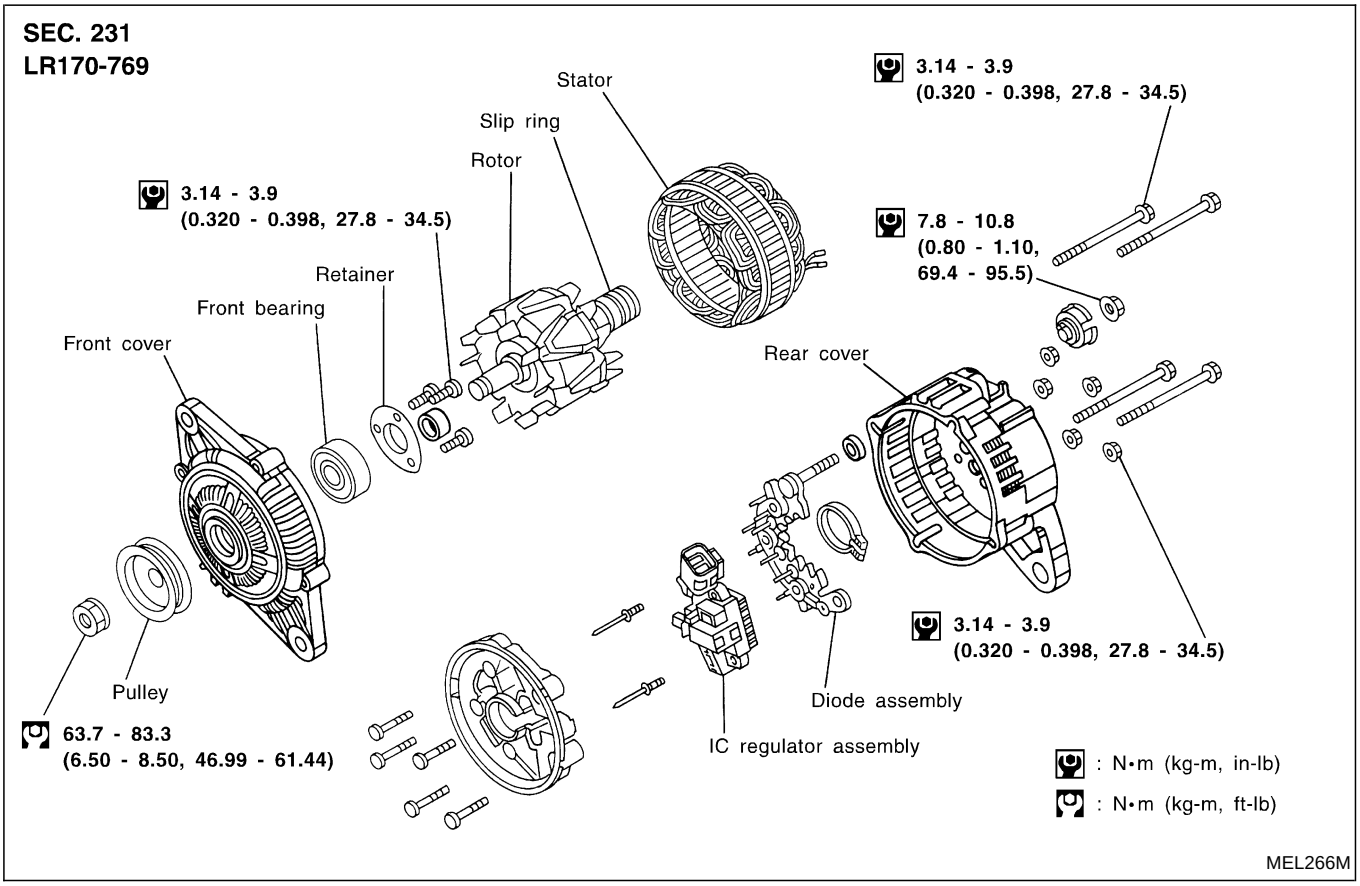

Removal and Installation

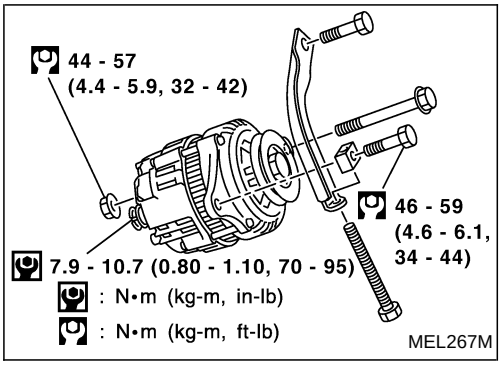

Service Data and Specifications (SDS)

ALTERNATOR

Type		LR170-769
		HITACHI
Applied model		VG30E
Nominal rating	V-A	12-70
Ground polarity		Negative
Minimum revolution under no-load (When 13.5V is applied)	rpm	Less than 1,000
Hot output current (When 13.5V is applied)	A/rpm	More than 17/1,300 More than 54/2,500 More than 75/5,000
Regulated output voltage	V	14.1 - 14.7
Minimum length of brush	mm (in)	6.0 (0.236)
Brush spring pressure	N (g, oz)	1.00 - 3.43 (102 - 350, 3.60 - 12.34)
Slip ring minimum outer diameter	mm (in)	26.0 (1.024)
Rotor (Field coil) resistance	Ω	2.58

*: Models with power steering and air conditioner

Aiming Adjustment/For the Middle East and Australia

When performing headlamp aiming adjustment, use an aiming machine, aiming wall screen or headlamp tester. Aimers should be in good repair, calibrated and operated in accordance with respective operation manuals.
If any aimer is not available, aiming adjustment can be done as follows:
For details, refer to the regulations in your own country.

a. Keep all tires inflated to correct pressures.
b. Place vehicle and tester on one and same flat surface.
c. See that there is no-load in vehicle (coolant, engine oil filled up to correct level and full fuel tank) other than the driver (or equivalent weight placed in driver's position).

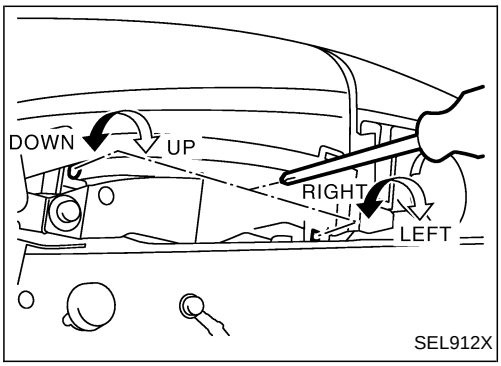

Low Beam

1. Turn headlamp low beam on.
2. Use adjusting screws to perform aiming adjustment.

- **First tighten the adjusting screw all the way and then make adjustment by loosening the screw.**

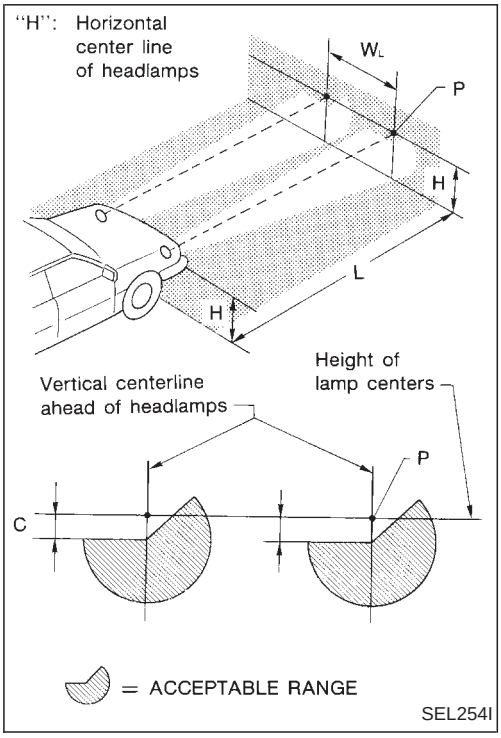

- **Adjust headlamps so that main axis of light is parallel to center line of body and is aligned with point P shown in illustration.**
- **Figure to the left shows headlamp aiming pattern for driving on right side of road; for driving on left side of road, aiming pattern is reversed.**
- **Dotted lines in illustration show center of headlamp.**

"H": Horizontal center line of headlamps
"W_L": Distance between each headlamp center 1,096 mm (43.15 in)
"L": 5,000 mm (196.85 in)
"C": 65 mm (2.56 in)

Wiring Diagram — STOP/L —

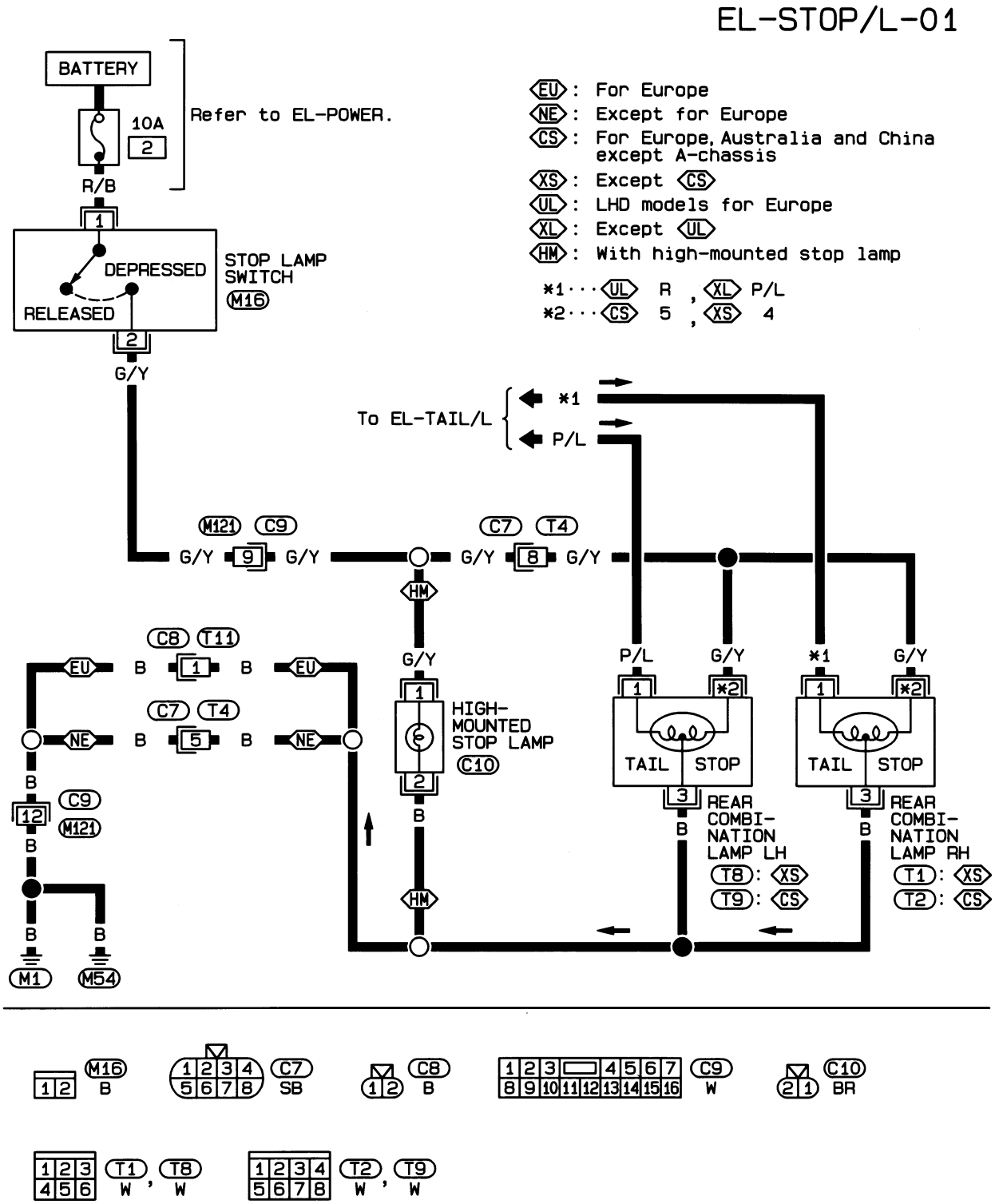

HEL531B

Wiring Diagram — BACK/L —/M/T Models

FOR VG ENGINE

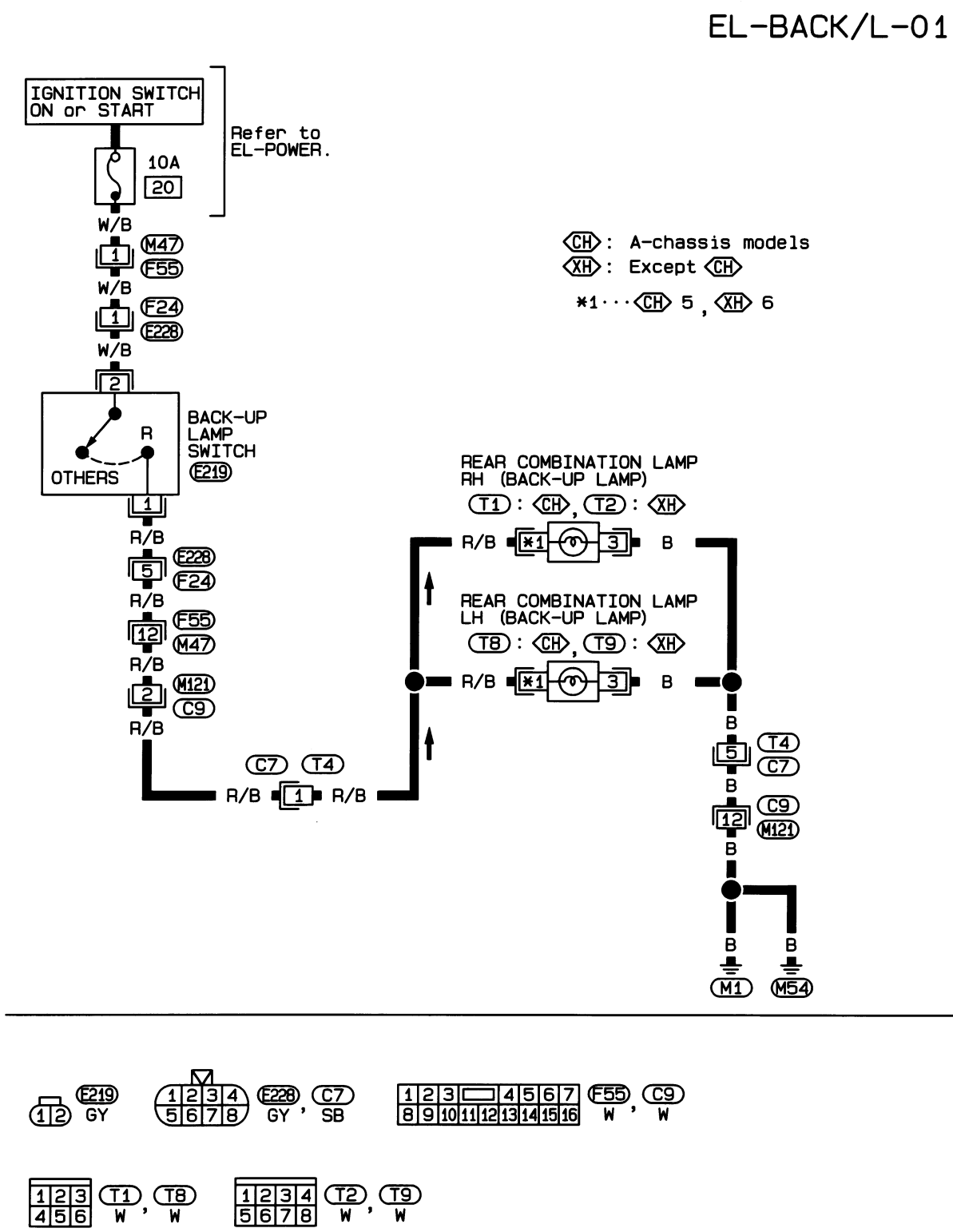

HEL273B

Wiring Diagram — BACK/L —/A/T Models

EL-BACK/L-02

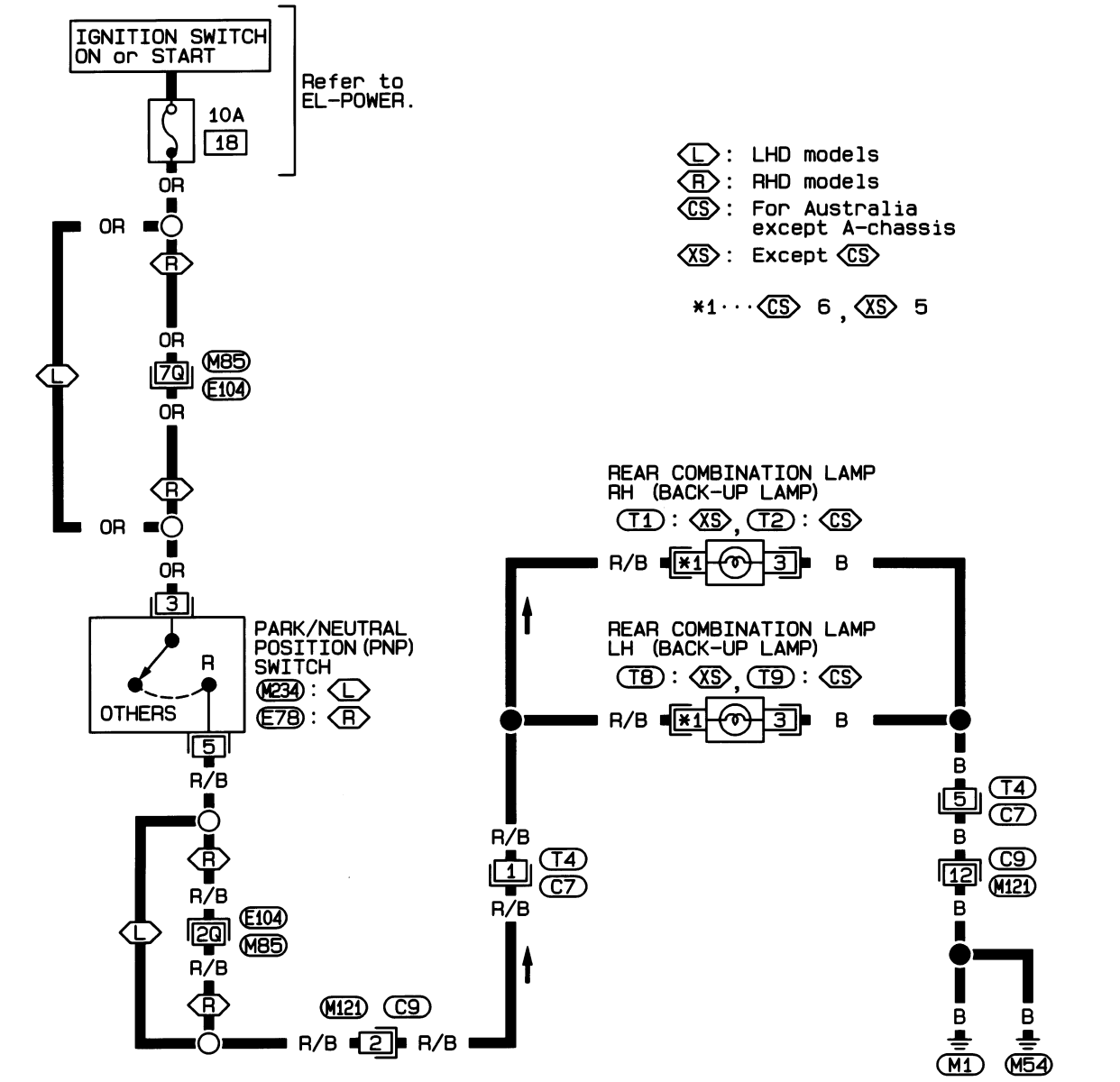

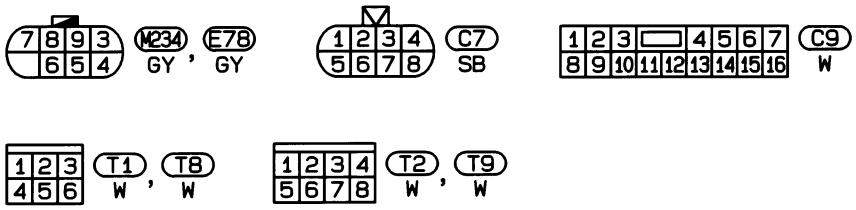

Refer to last page (Foldout page).

M85 , E104

HEL274B

Wiring Diagram — ILL —/LHD Models

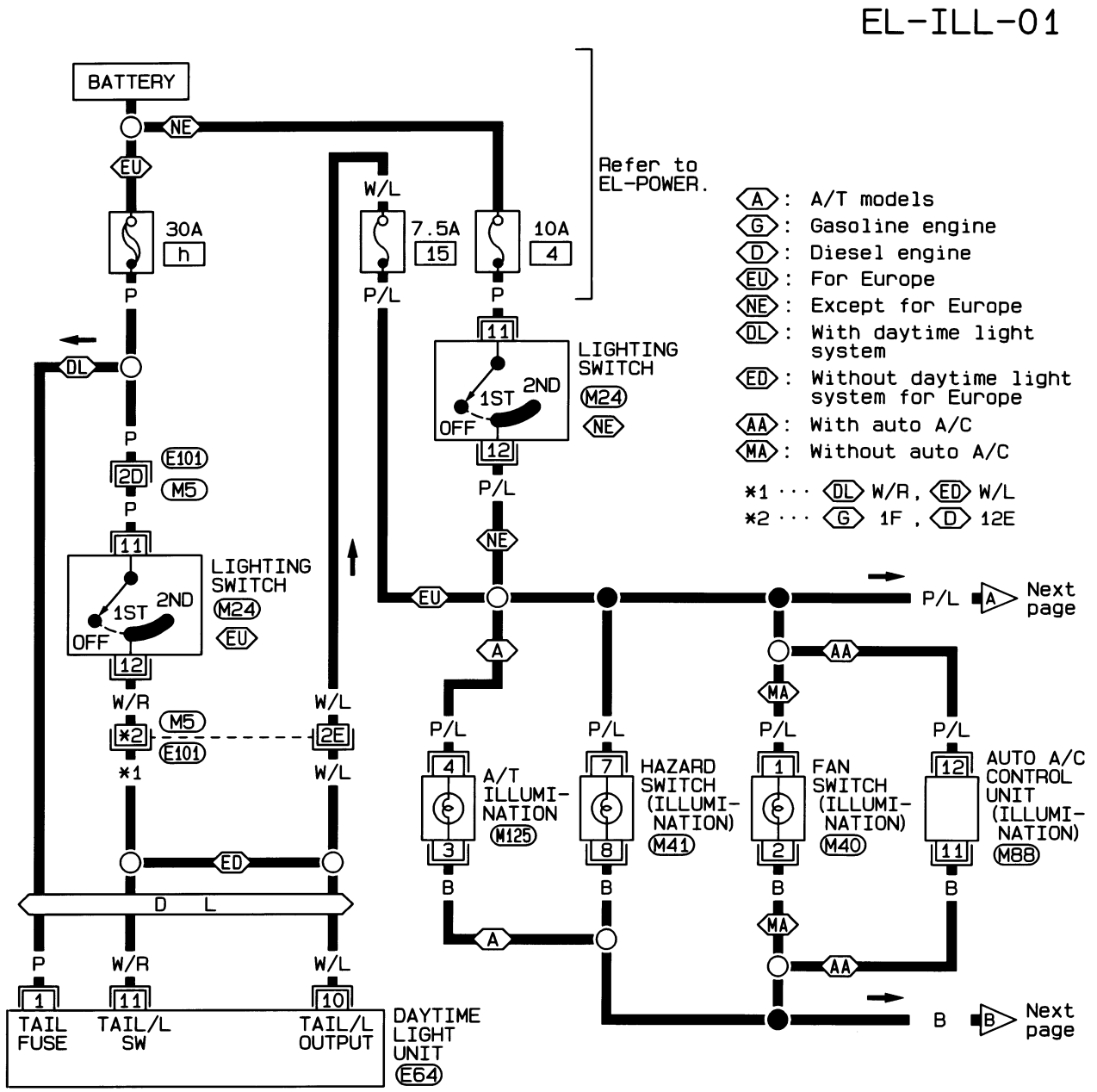

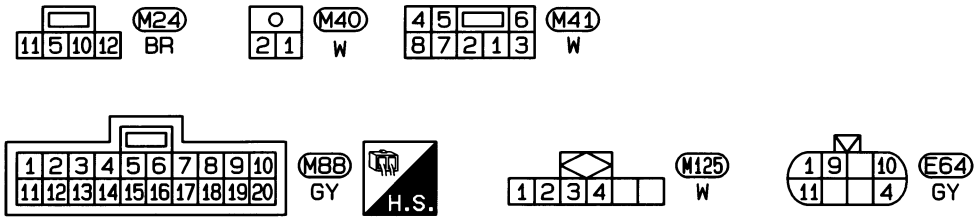

Refer to last page (Foldout page).

M5, E101

Wiring Diagram — ILL —/LHD Models (Cont'd)

EL-ILL-02

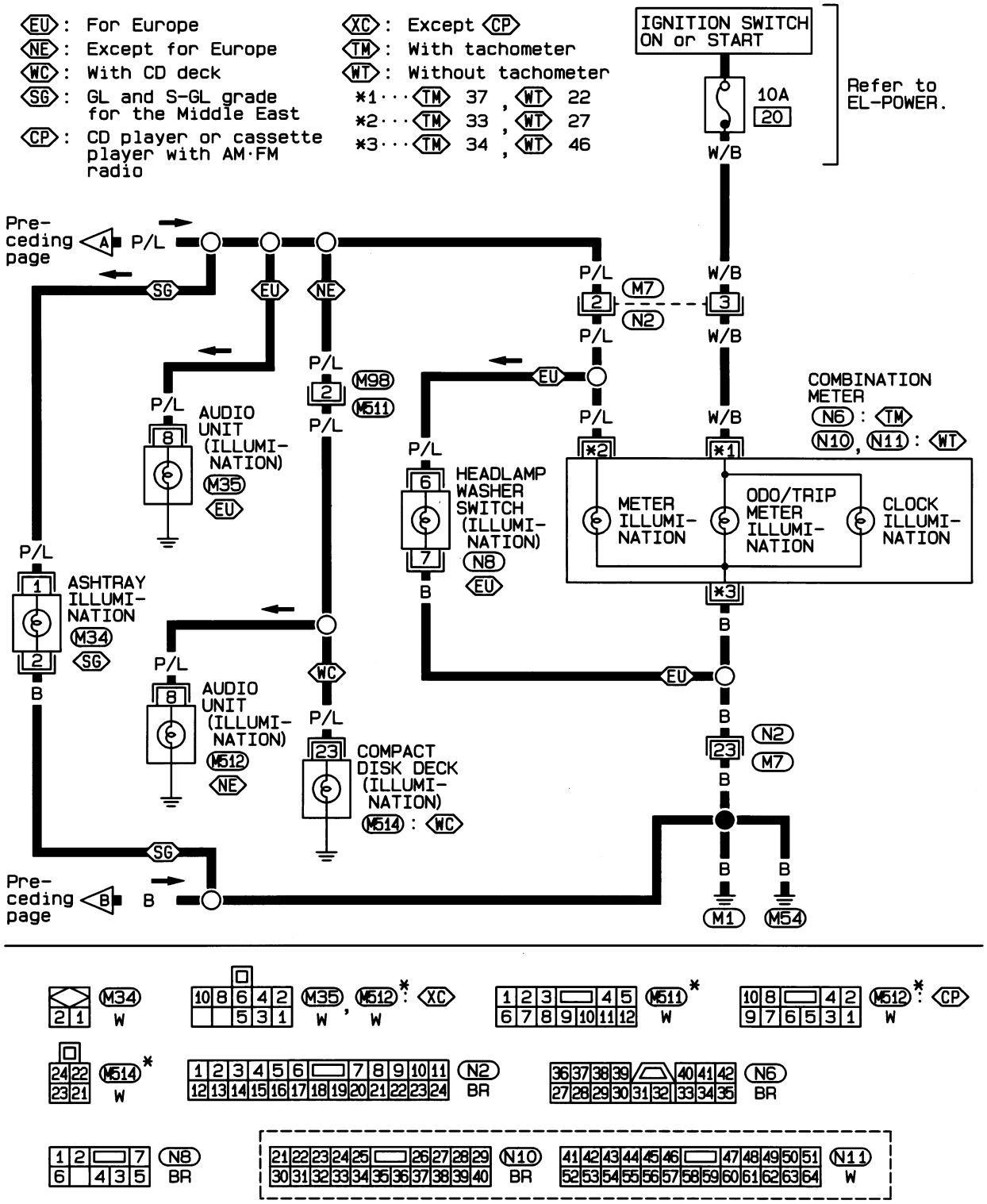

* : This connector is not shown in "HARNESS LAYOUT".

HEL532B

Wiring Diagram — ILL —/RHD Models

EL-ILL-03

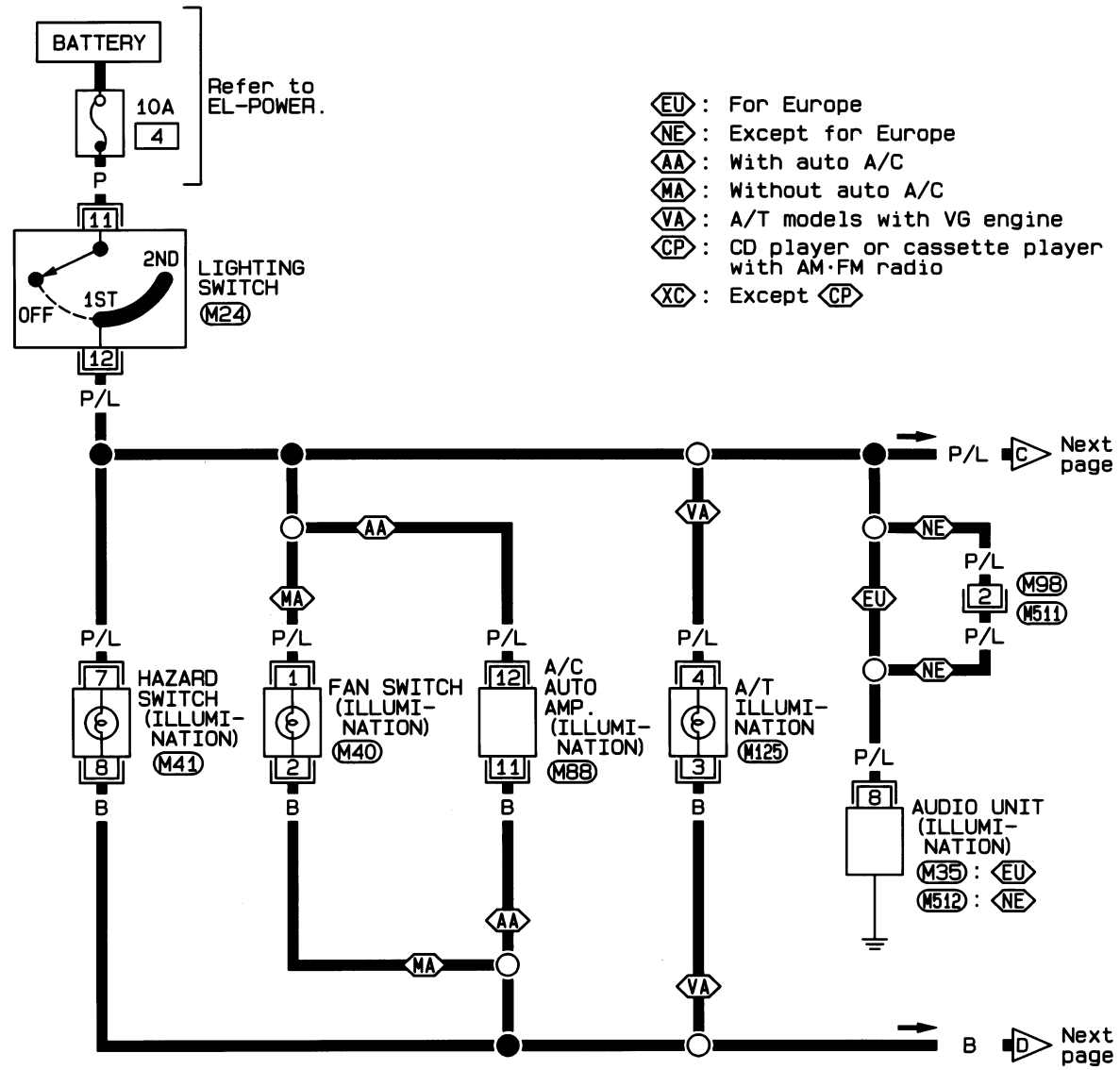

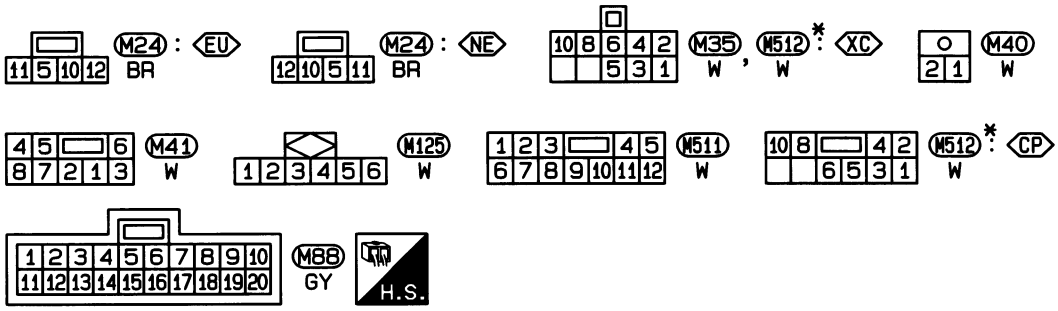

* : This connector is not shown in "HARNESS LAYOUT".

HEL533B

Wiring Diagram — ILL —/RHD Models (Cont'd)

EL-ILL-04

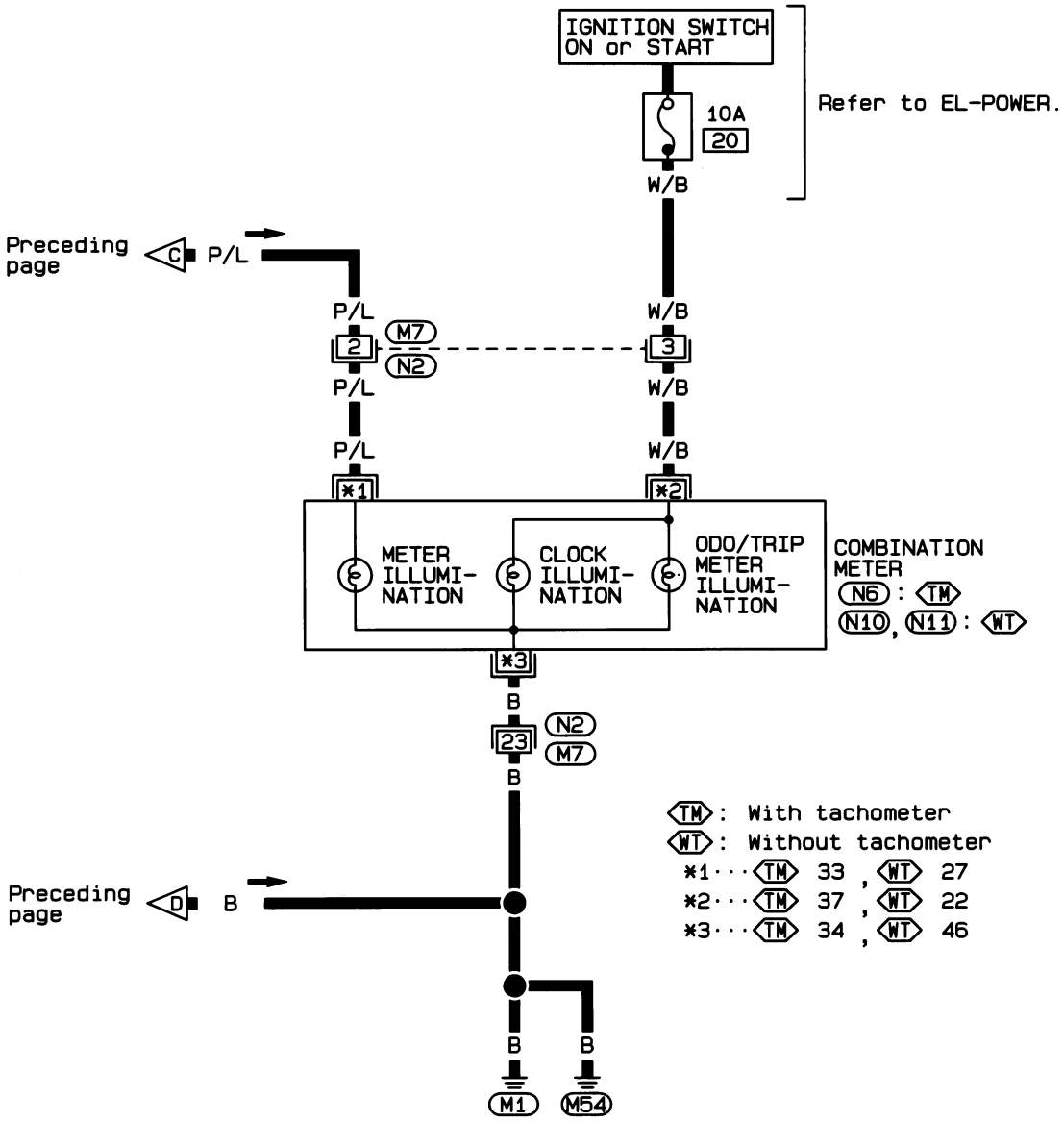

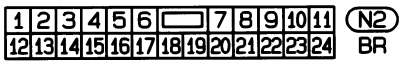

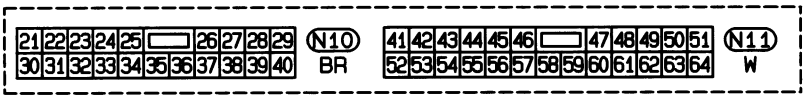

HEL534B

Combination Meter

WITH TACHOMETER

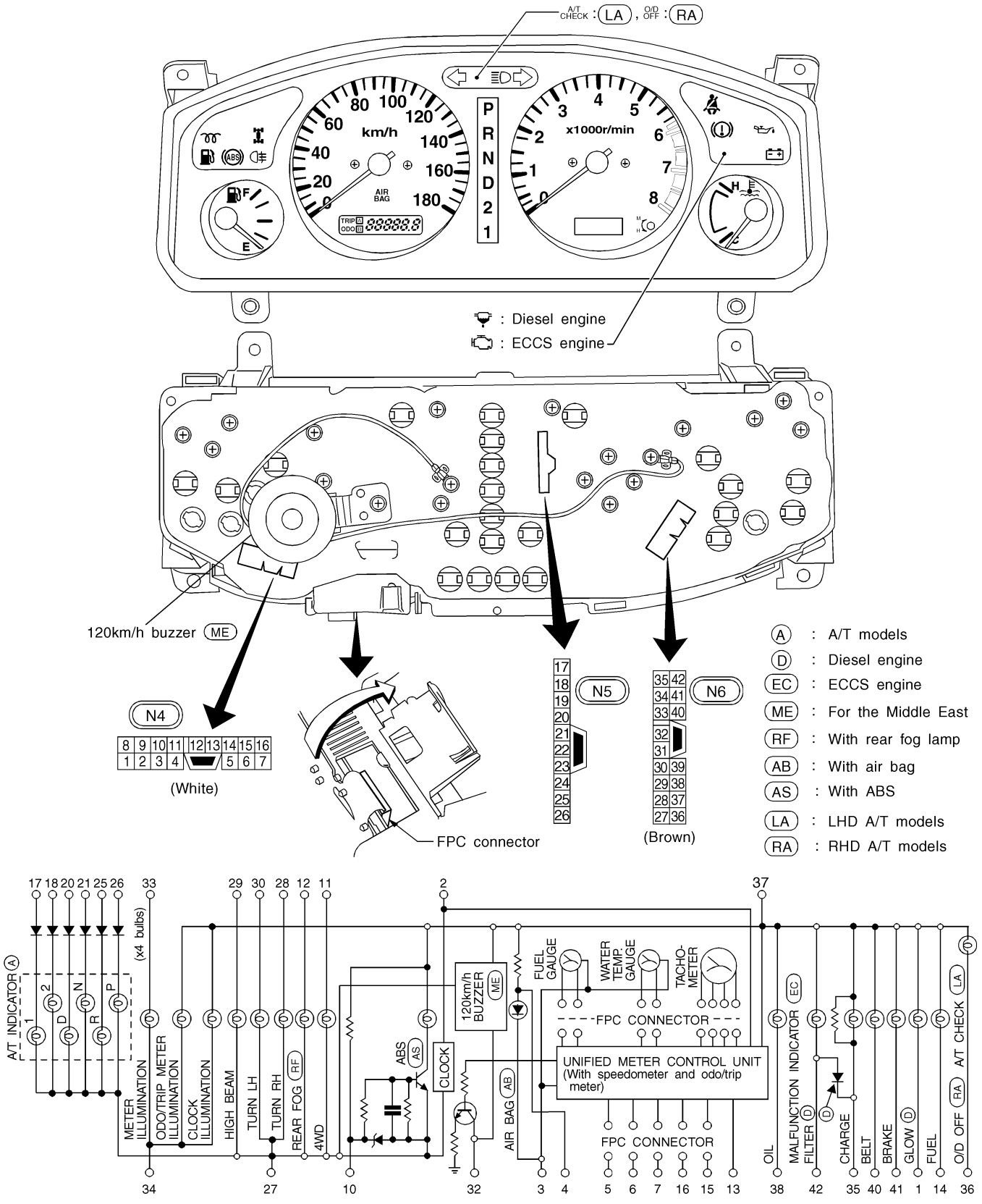

HEL278B

Wiring Diagram — METER —/Gasoline Engine with Tachometer

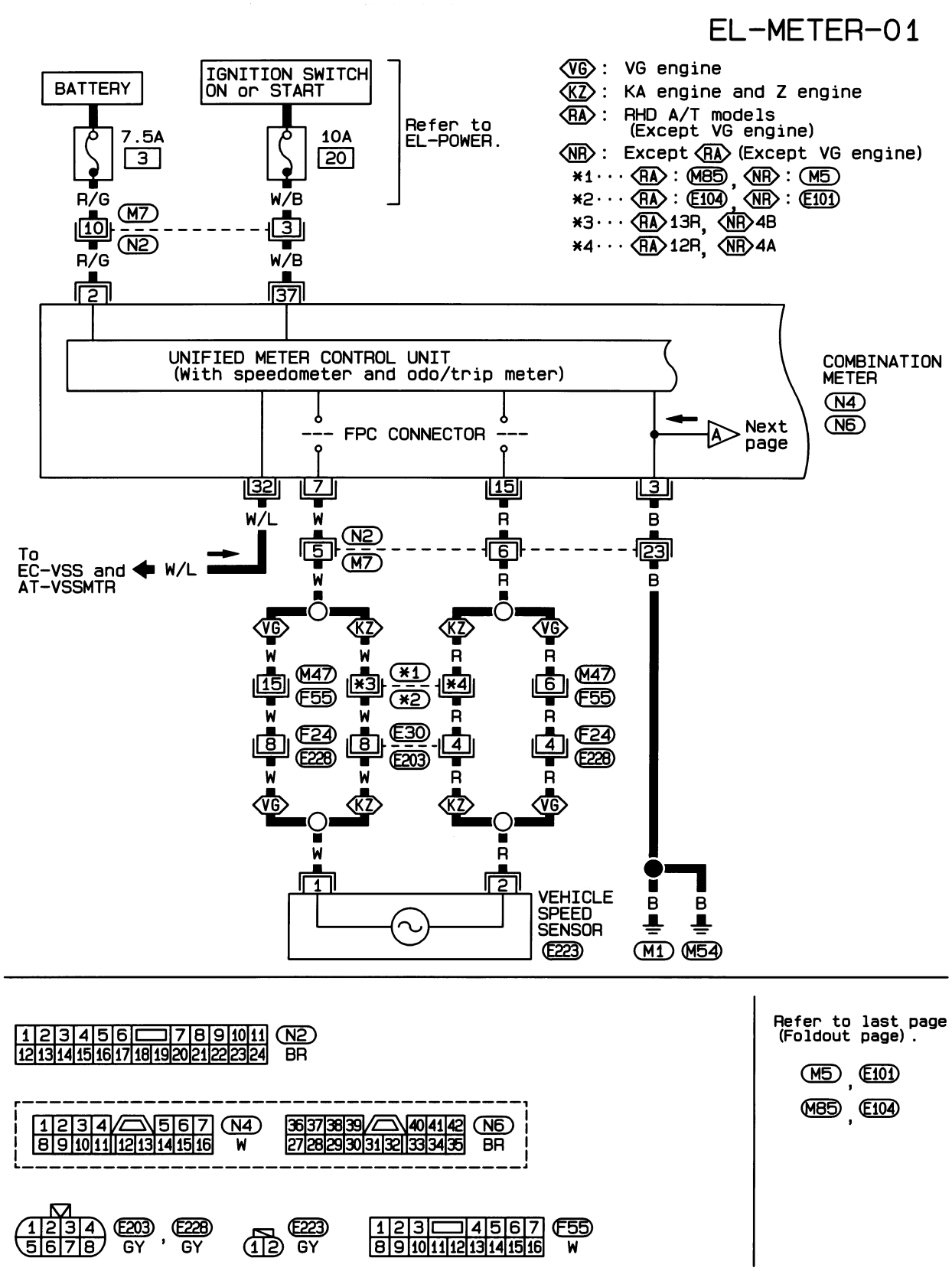

Refer to last page (Foldout page).

M5, E101

M85, E104

HEL279B

Wiring Diagram — METER —/Gasoline Engine with Tachometer (Cont'd)

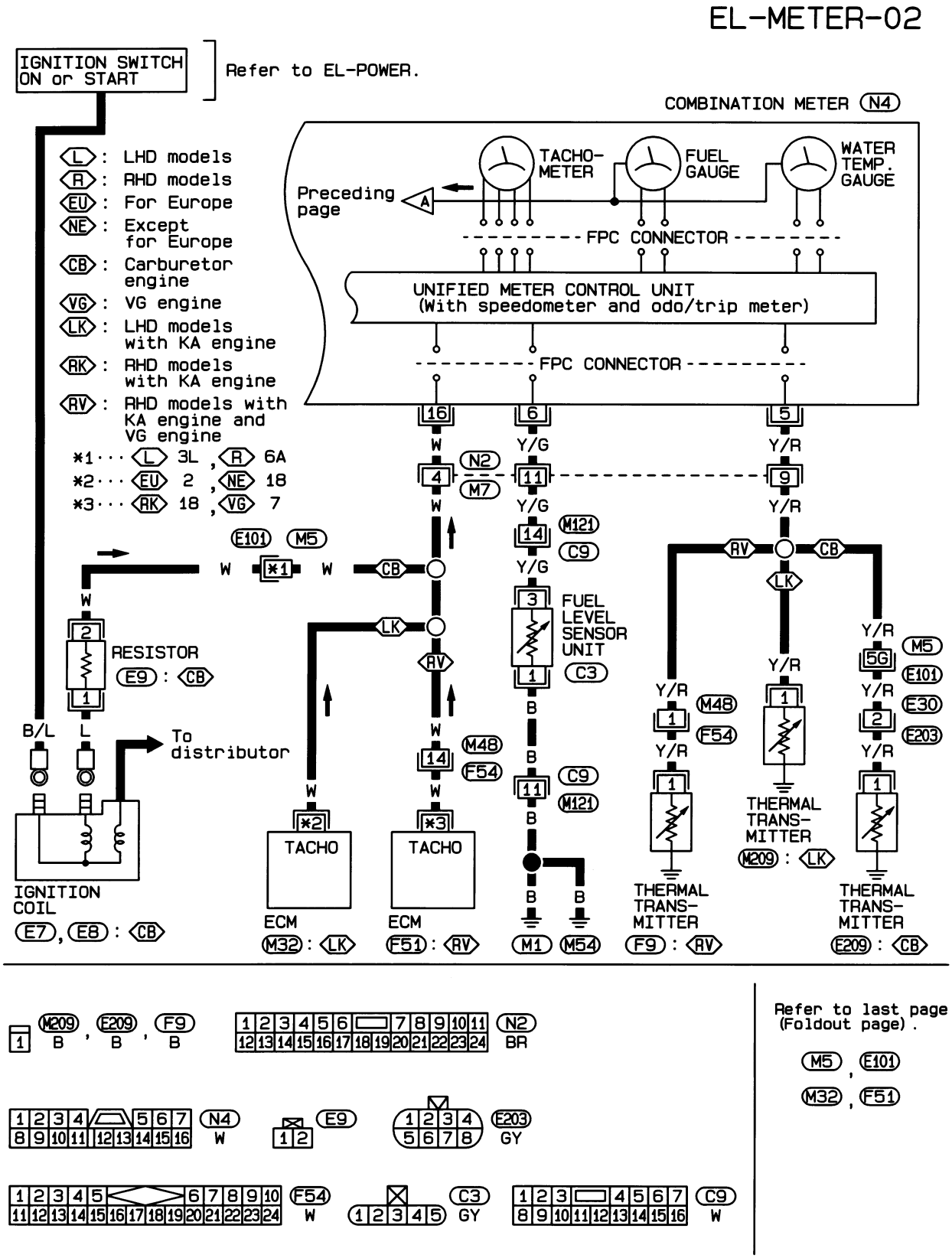

HEL280B

Wiring Diagram — METER —/Diesel Engine with Tachometer

EL-METER-03

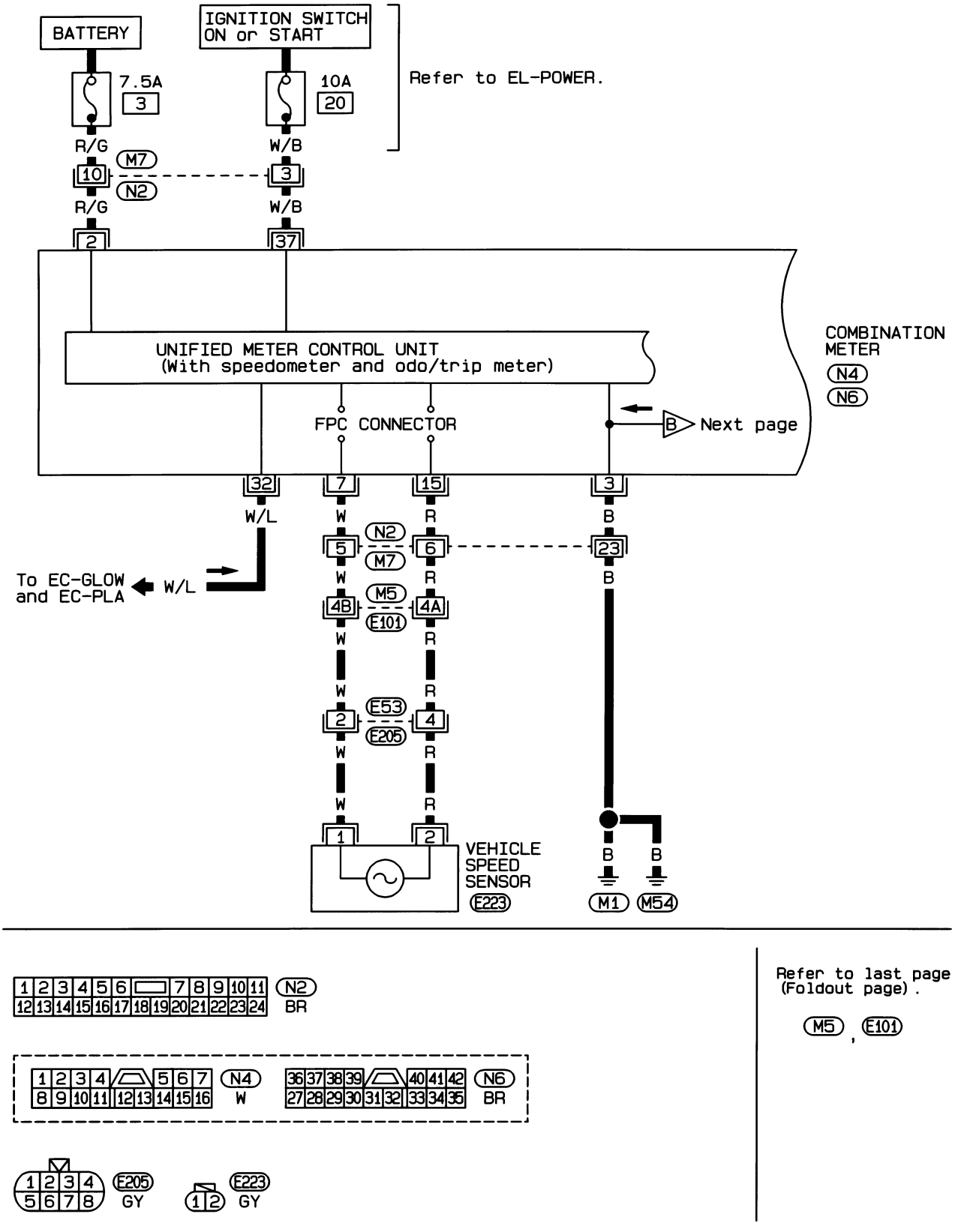

Refer to last page (Foldout page).

M5, E101

HEL718A

Wiring Diagram — METER —/Diesel Engine with Tachometer (Cont'd)

EL-METER-04

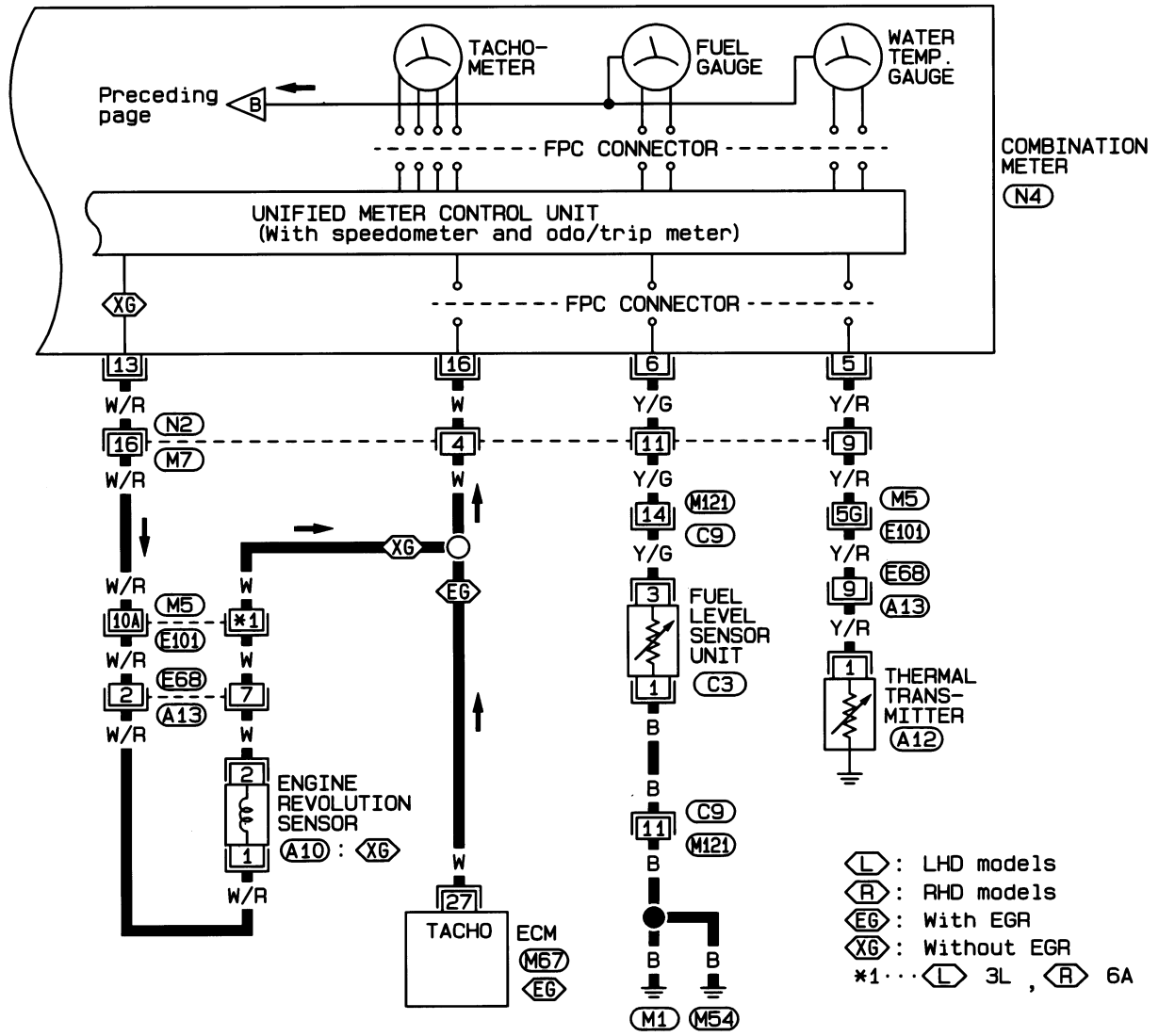

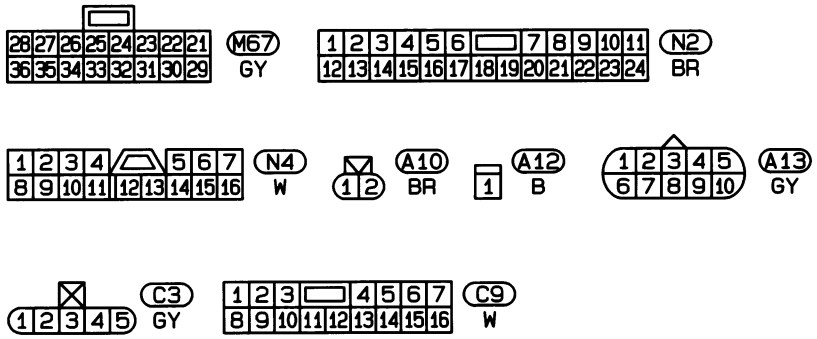

Refer to last page (Foldout page).

M5 , E101

HEL535B

Schematic

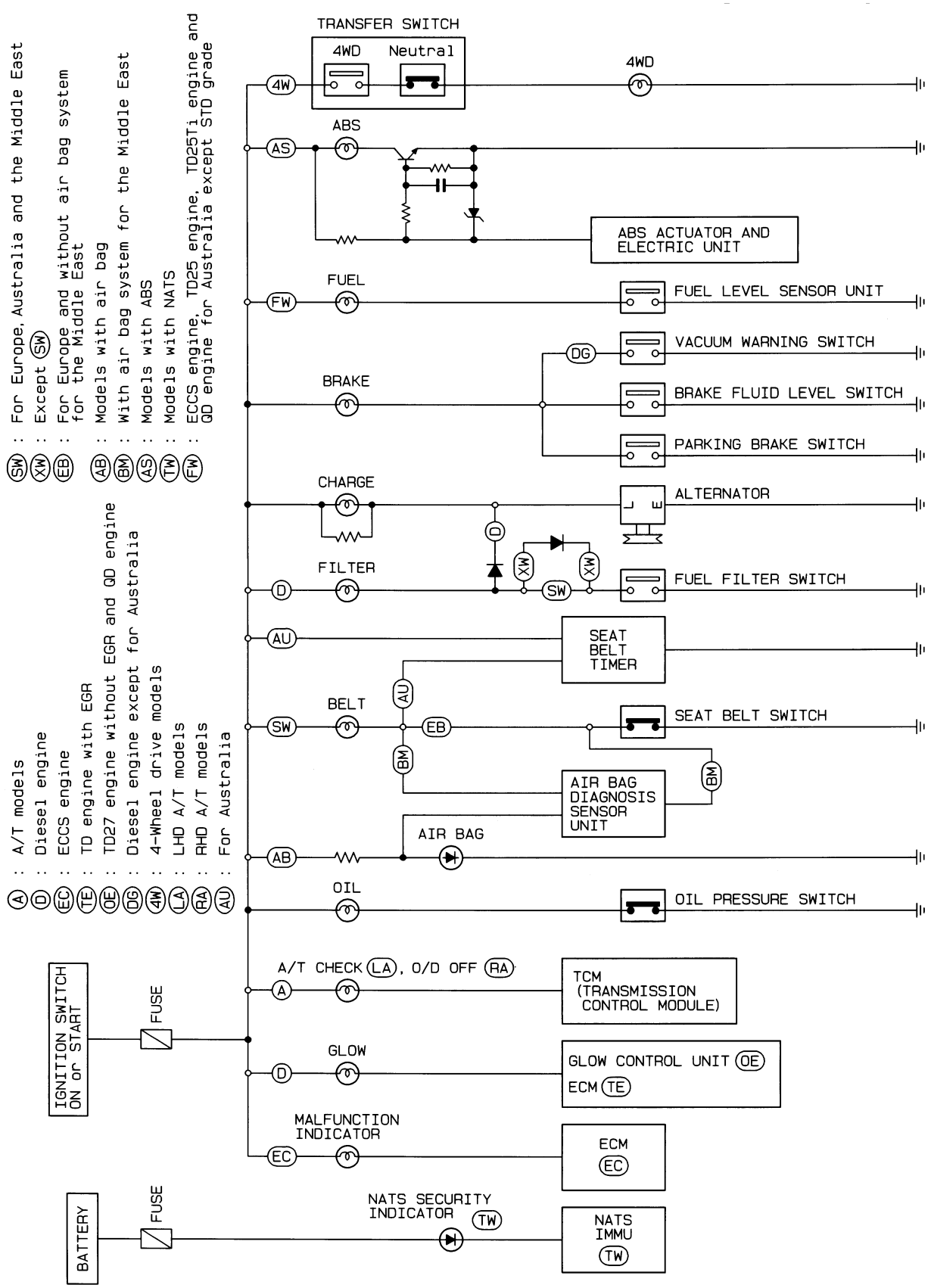

HEL536B

Wiring Diagram — WARN —/Gasoline Engine

LHD MODELS

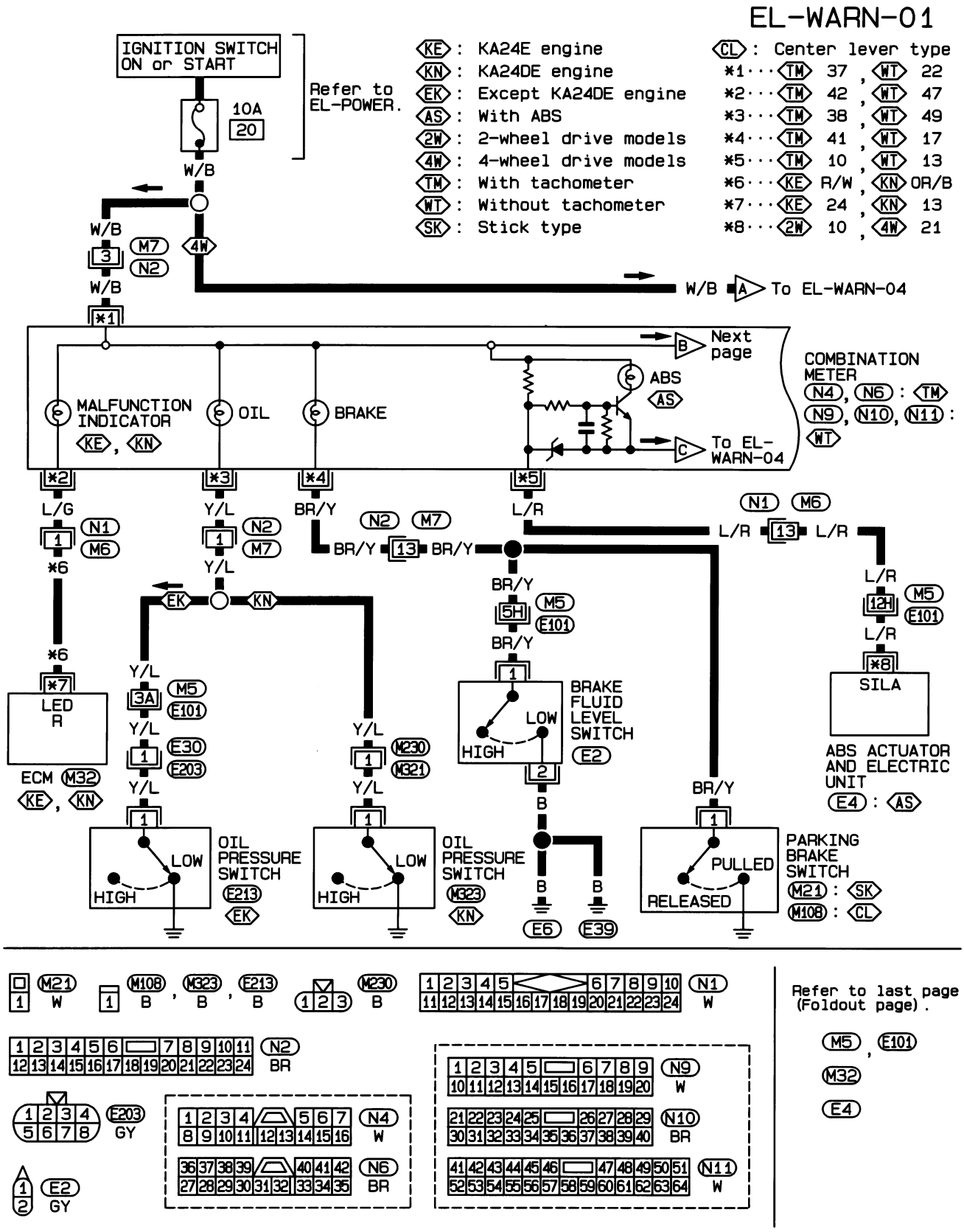

HEL285B

Wiring Diagram — WARN —/Gasoline Engine (Cont'd)

EL-WARN-02

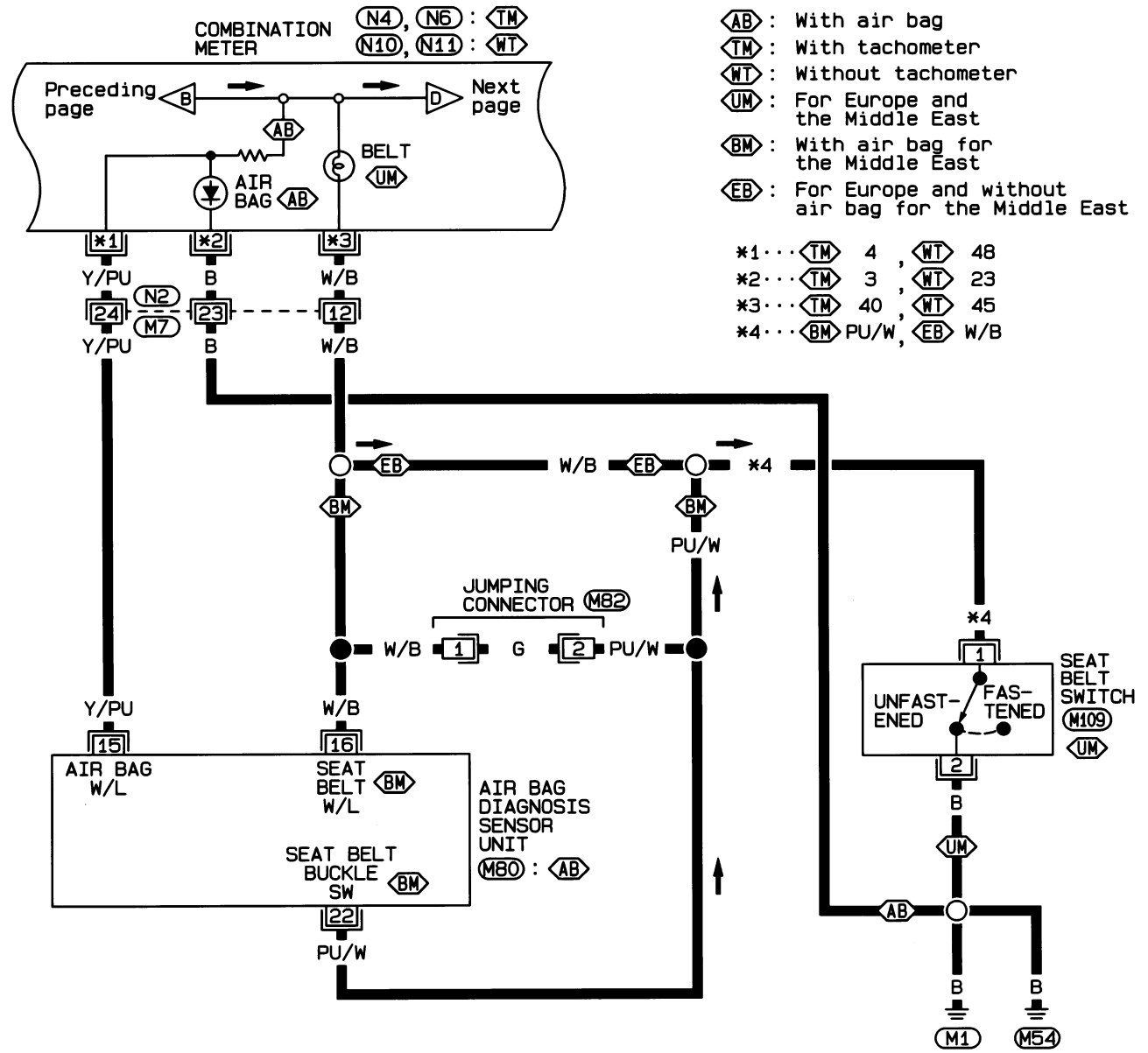

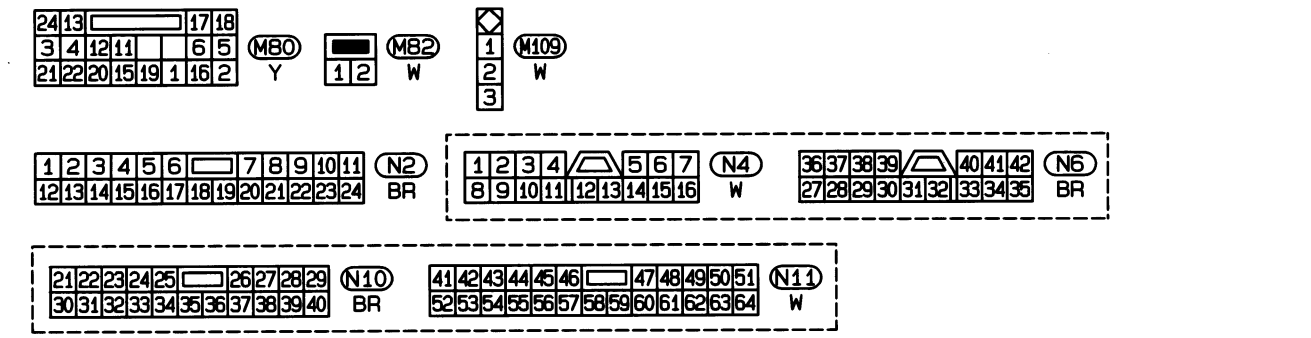

HEL537B

Wiring Diagram — WARN —/Gasoline Engine (Cont'd)

EL-WARN-03

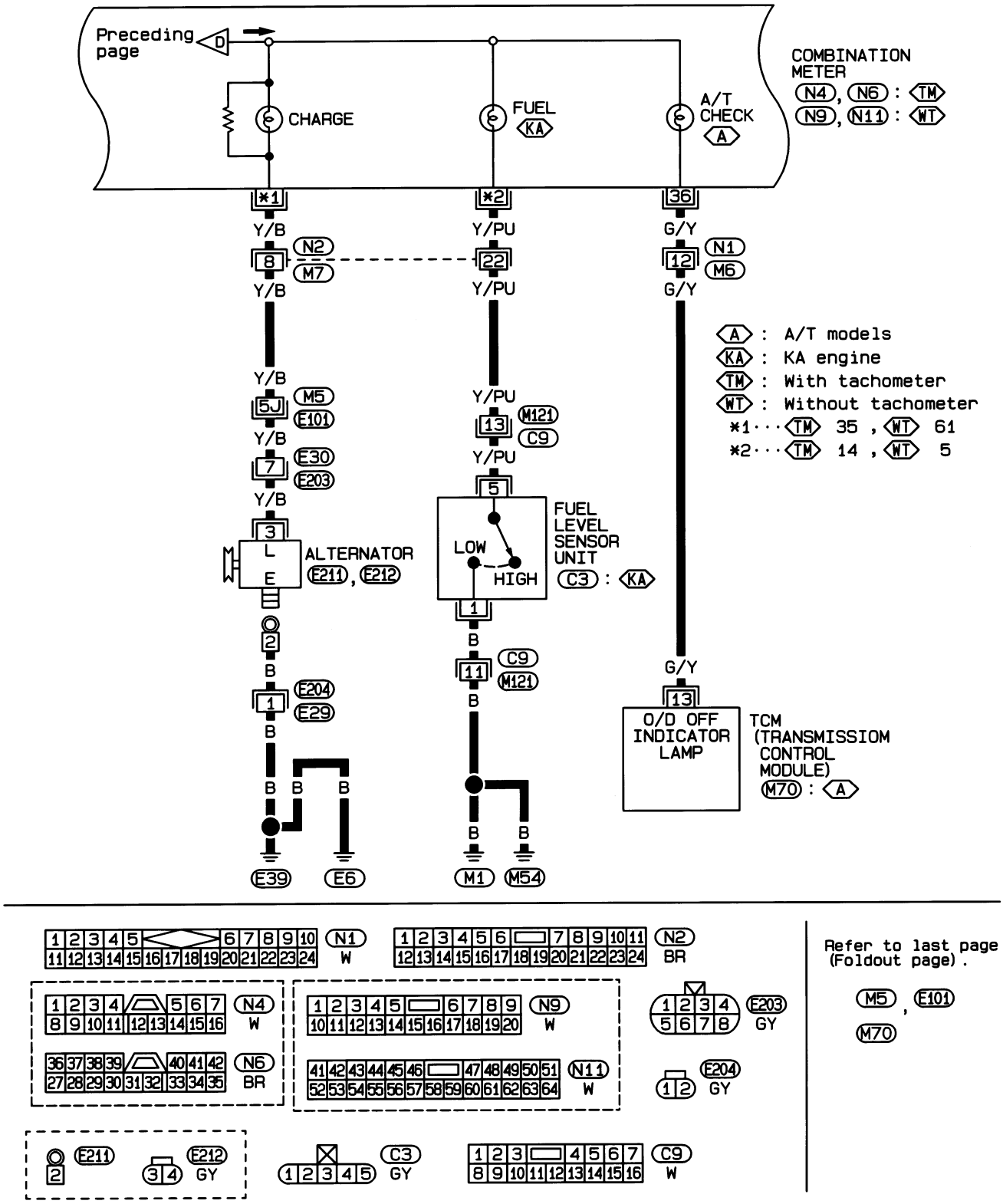

HEL287B

Wiring Diagram — WARN —/Gasoline Engine (Cont'd)

EL-WARN-04

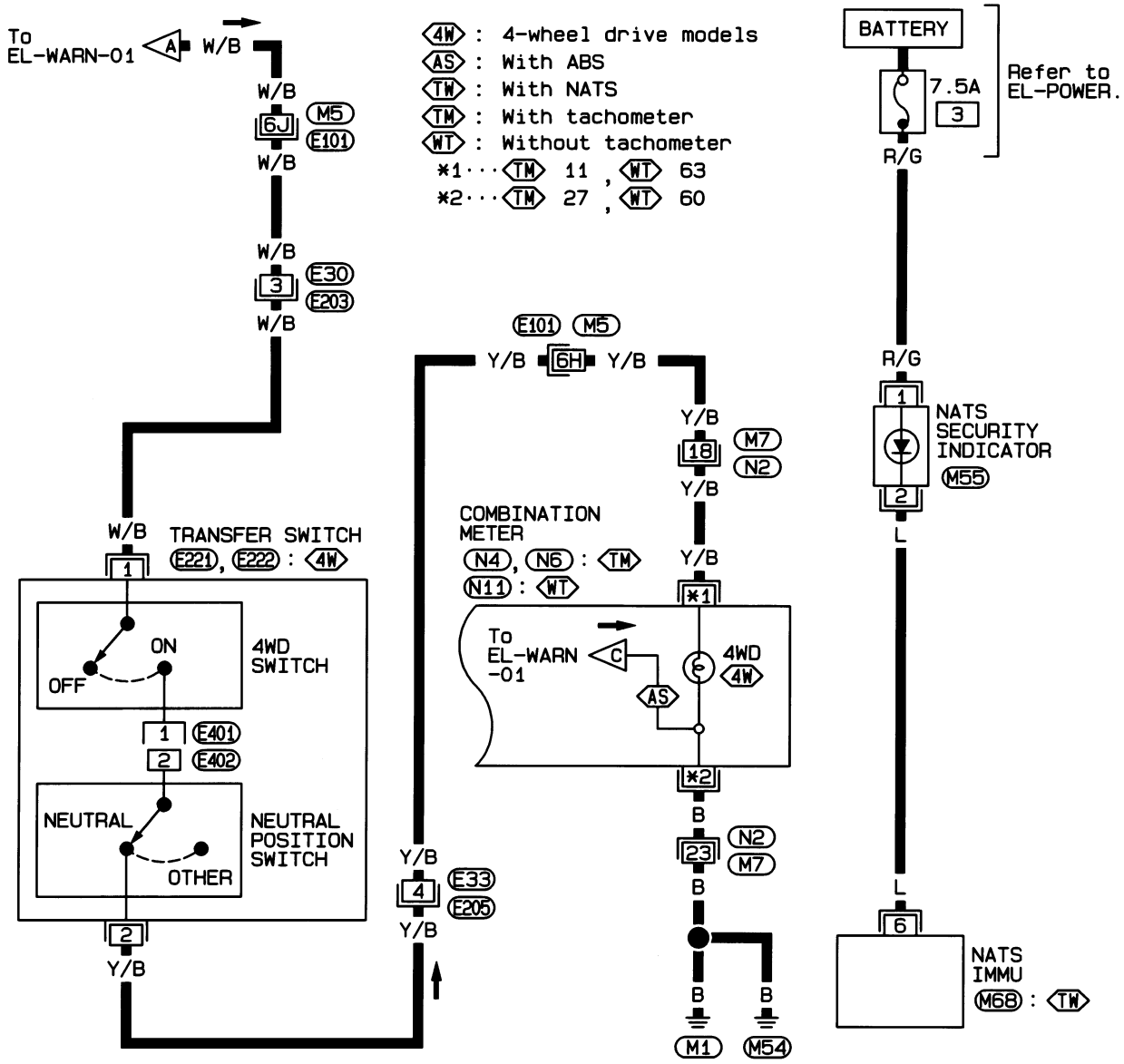

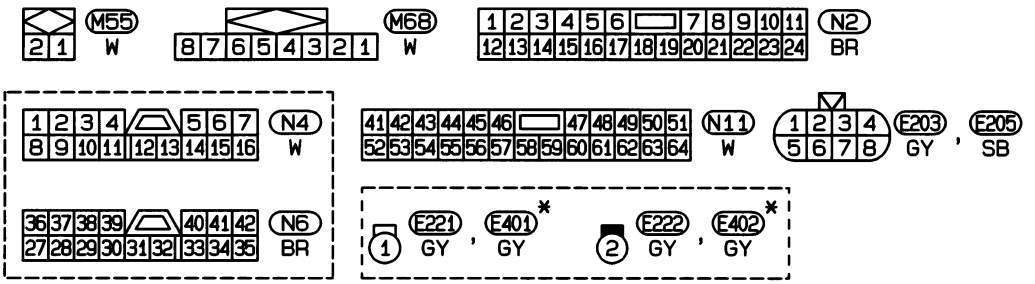

Refer to last page (Foldout page).

M5 , E101

* : This connector is not shown in "HARNESS LAYOUT".

HEL288B

Wiring Diagram — WARN —/Gasoline Engine (Cont'd)

RHD MODELS

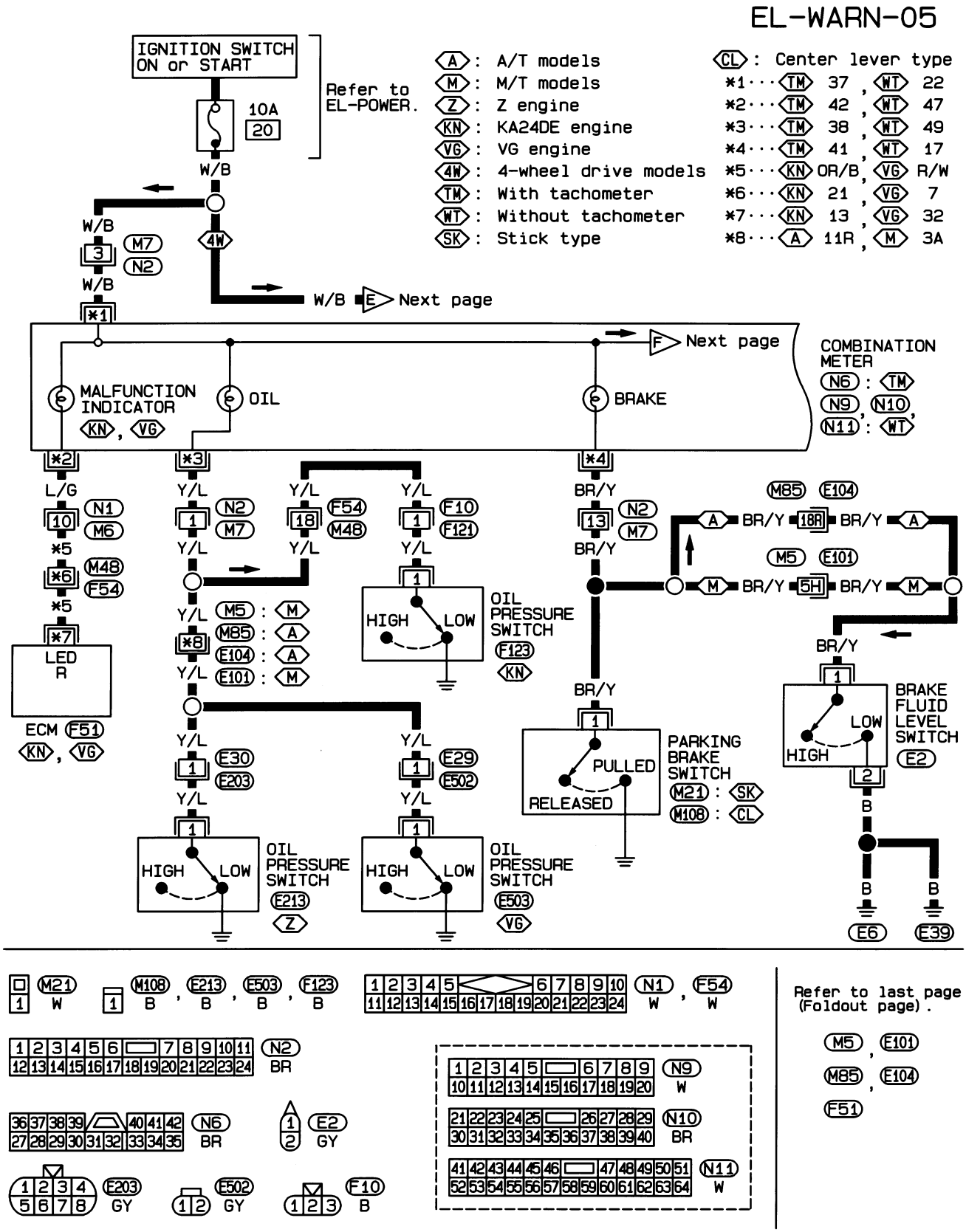

HEL289B

Wiring Diagram — WARN —/Gasoline Engine (Cont'd)

EL-WARN-06

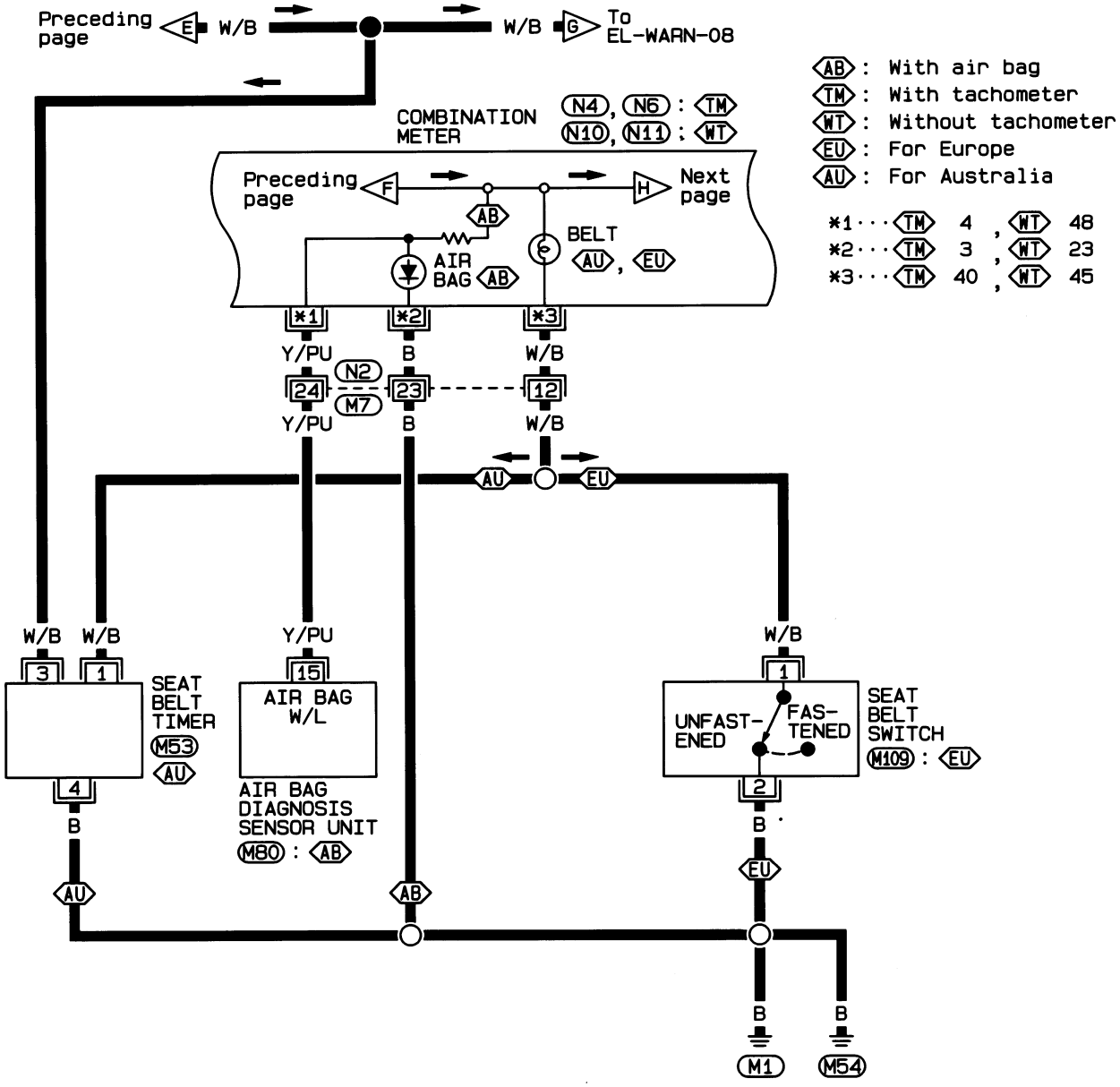

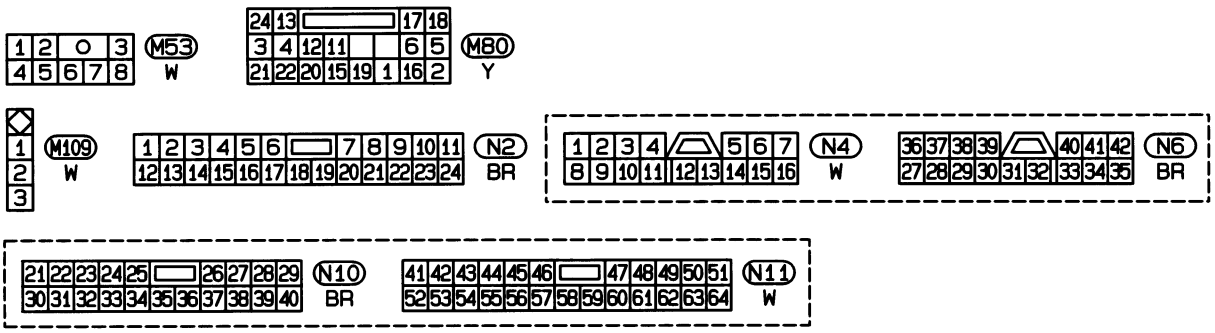

HEL538B

Wiring Diagram — WARN —/Gasoline Engine (Cont'd)

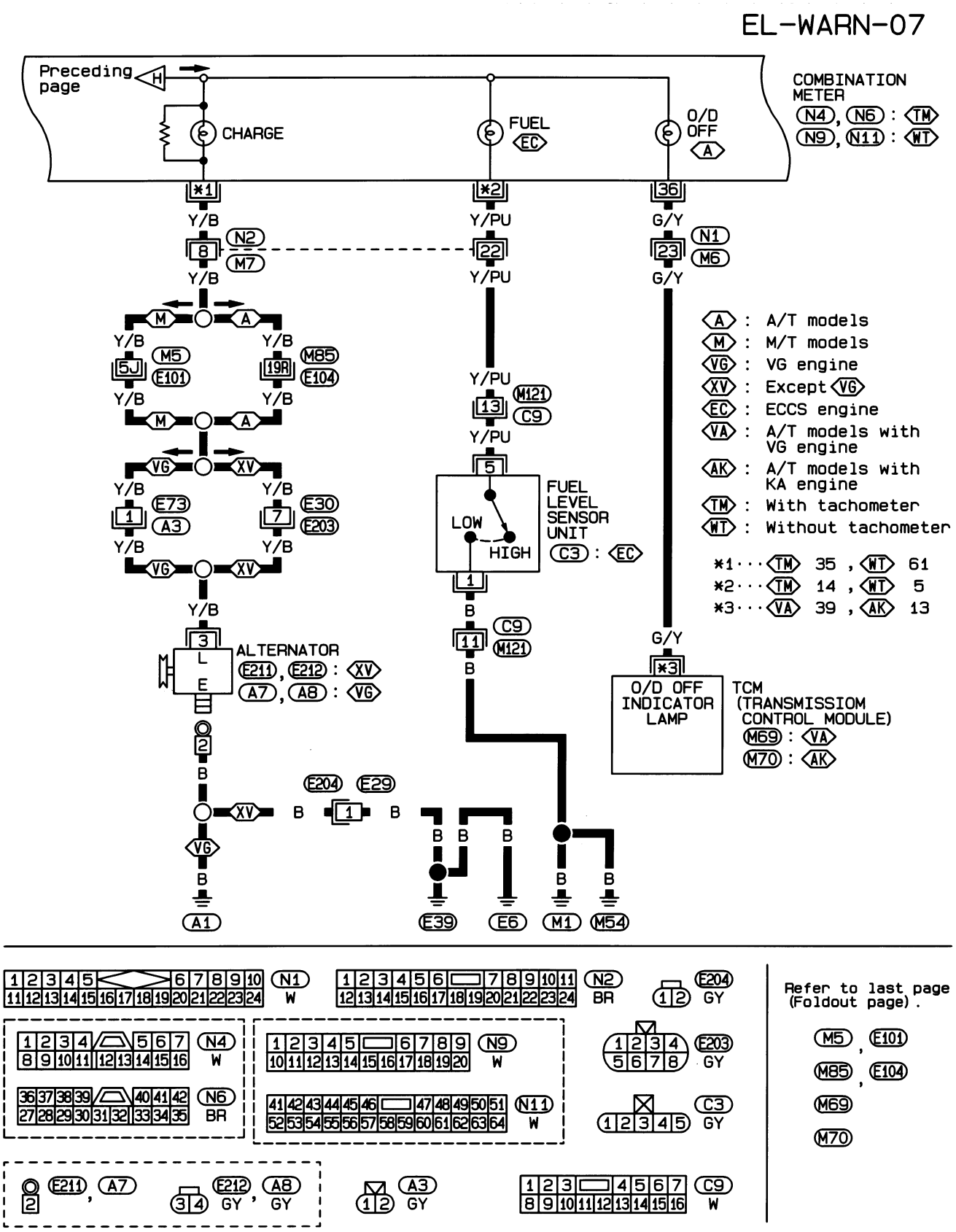

HEL291B

Wiring Diagram — WARN —/Gasoline Engine (Cont'd)

EL-WARN-08

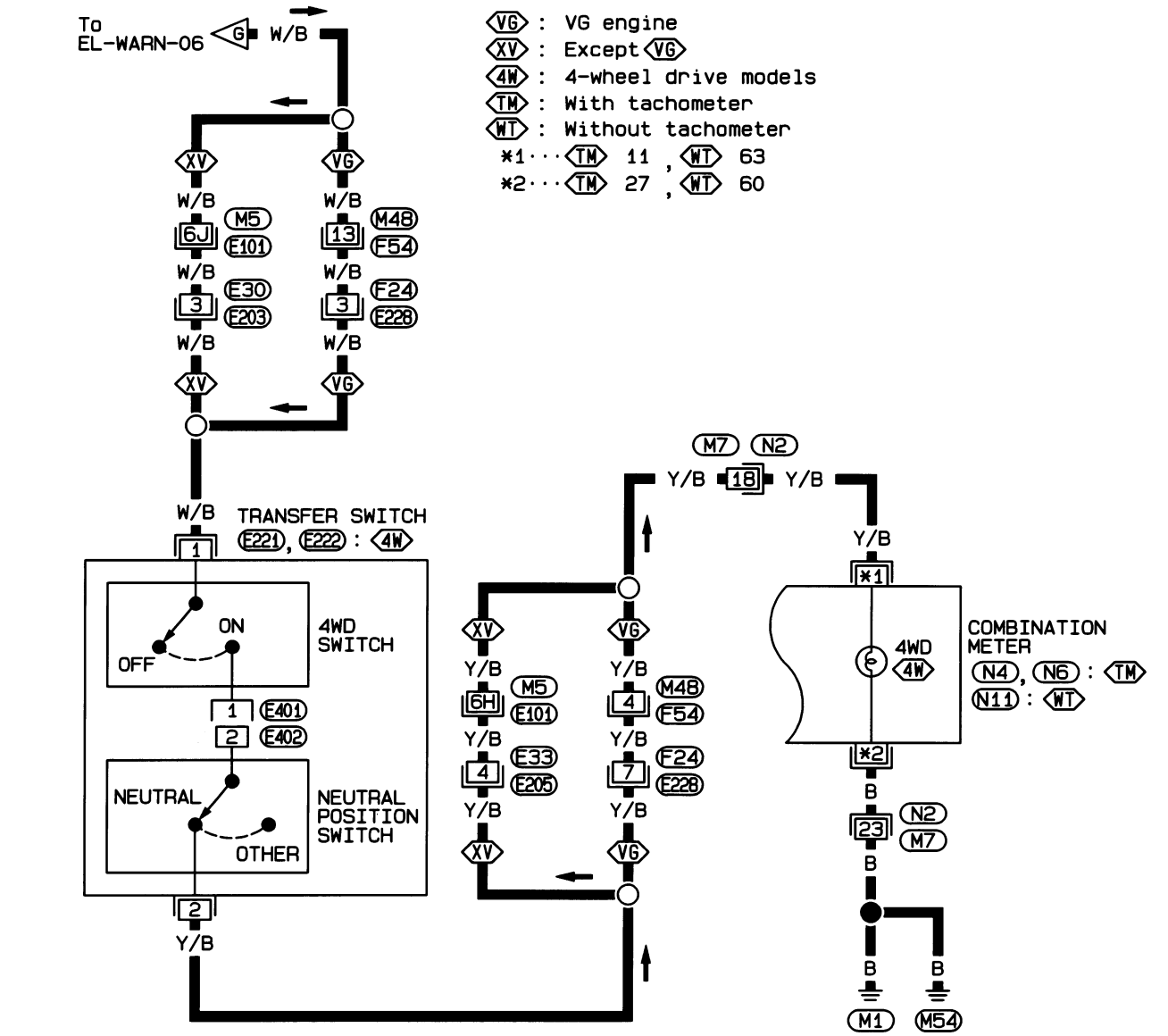

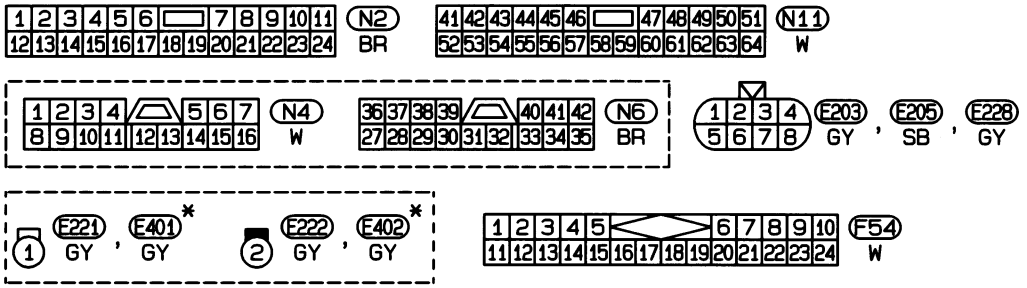

Refer to last page (Foldout page).

M5 , E101

* : This connector is not shown in "HARNESS LAYOUT".

HEL292B

Wiring Diagram — WARN —/Diesel Engine

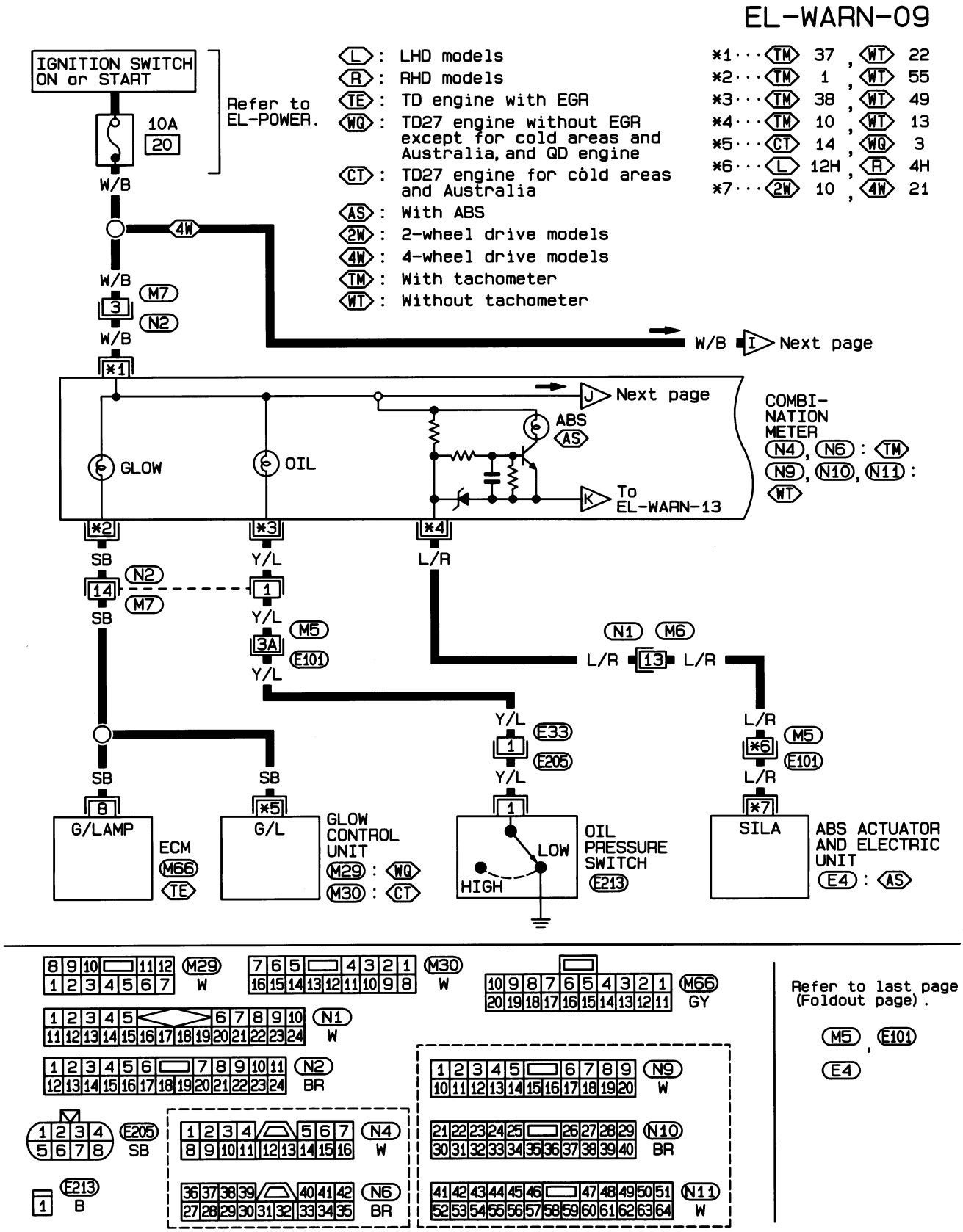

HEL539B

Wiring Diagram — WARN —/Diesel Engine (Cont'd)

EL-WARN-10

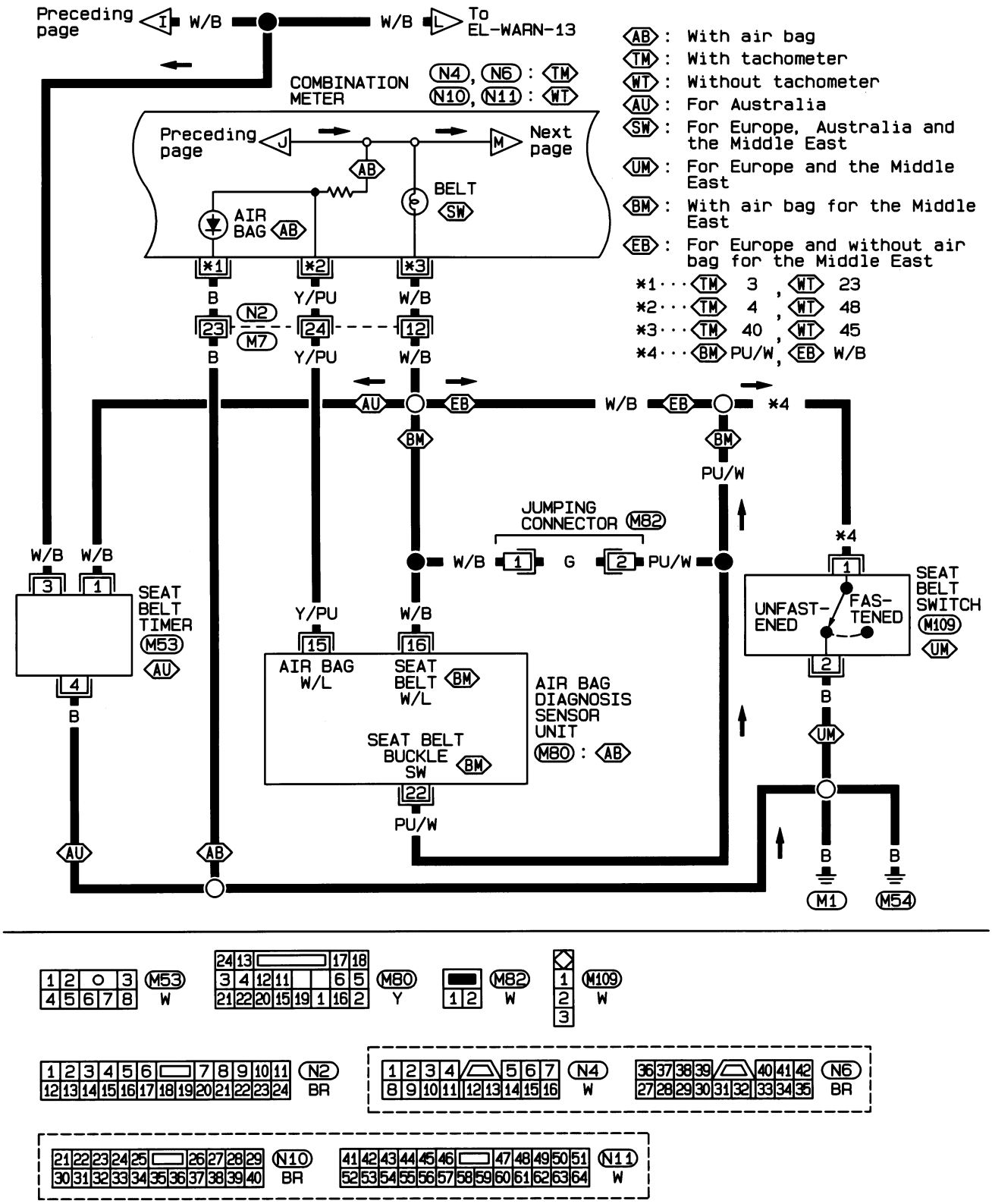

HEL540B

Wiring Diagram — WARN —/Diesel Engine (Cont'd)

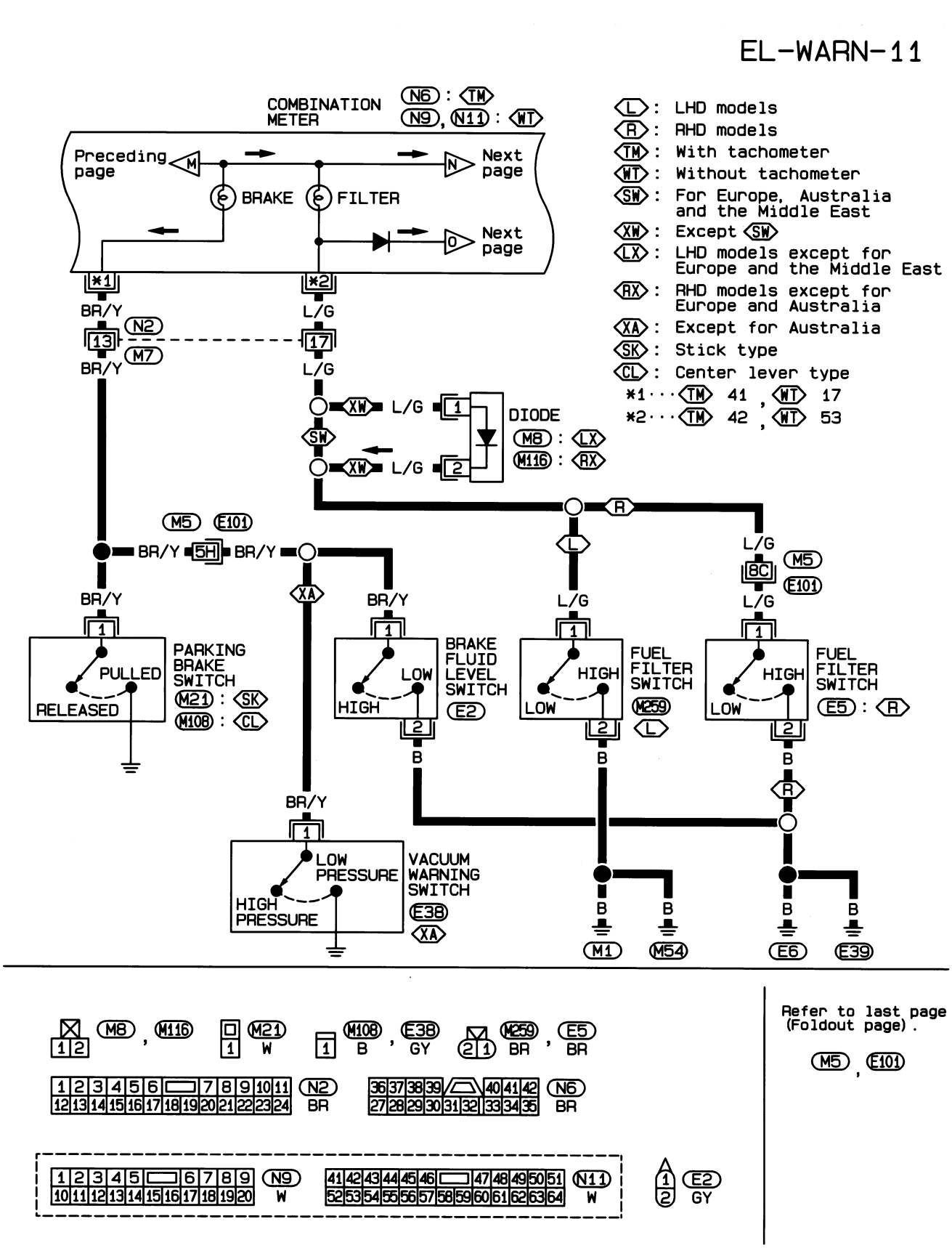

Refer to last page (Foldout page).

M5 , E101

HEL541B

Wiring Diagram — WARN —/Diesel Engine (Cont'd)

EL-WARN-12

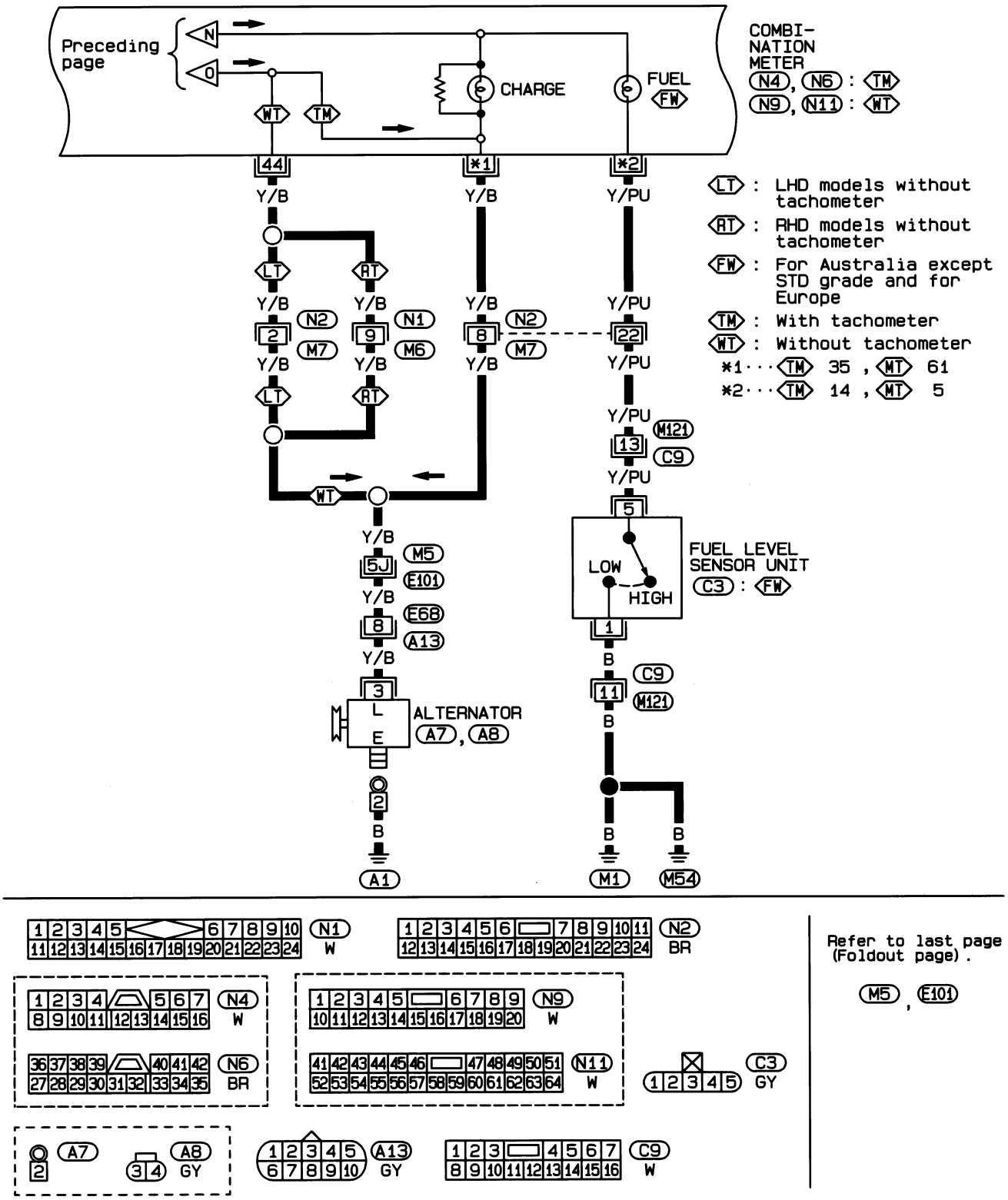

HEL542B

Wiring Diagram — WARN —/Diesel Engine (Cont'd)

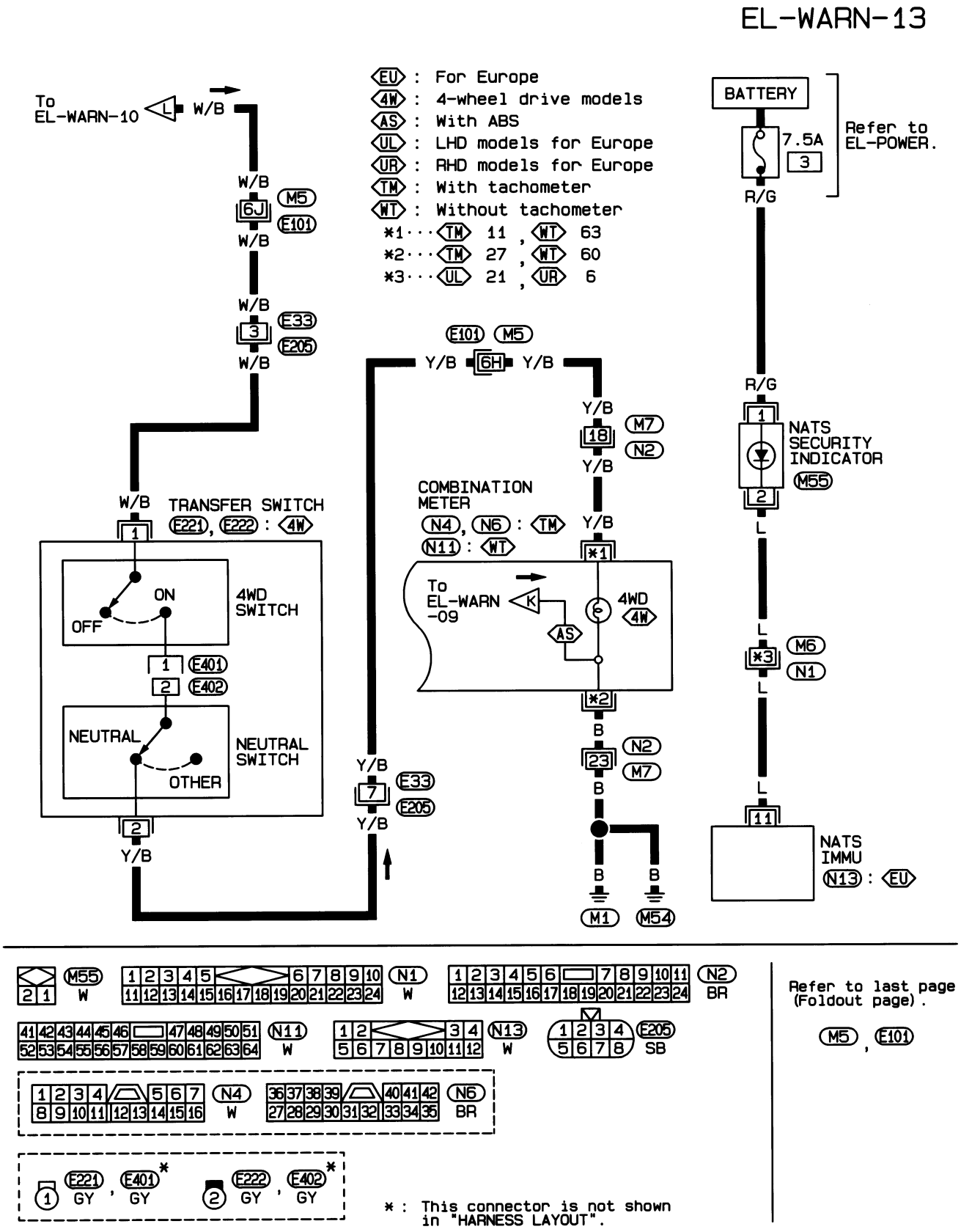

Wiring Diagram — AT/IND —/RHD Models

EL-AT/IND-01

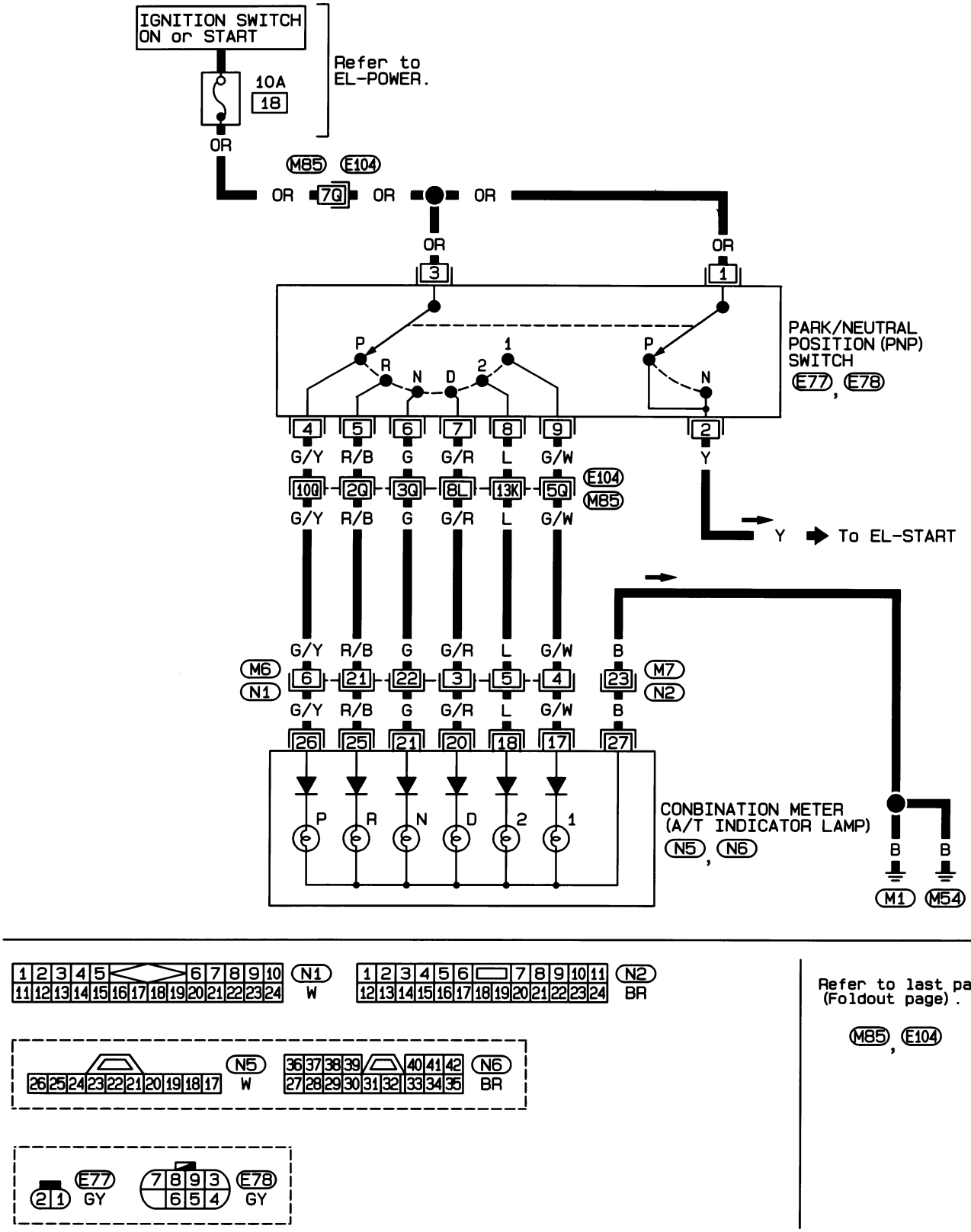

Refer to last page (Foldout page).

M85, E104

HEL298B

Wiring Diagram — HORN —

EL-HORN-01

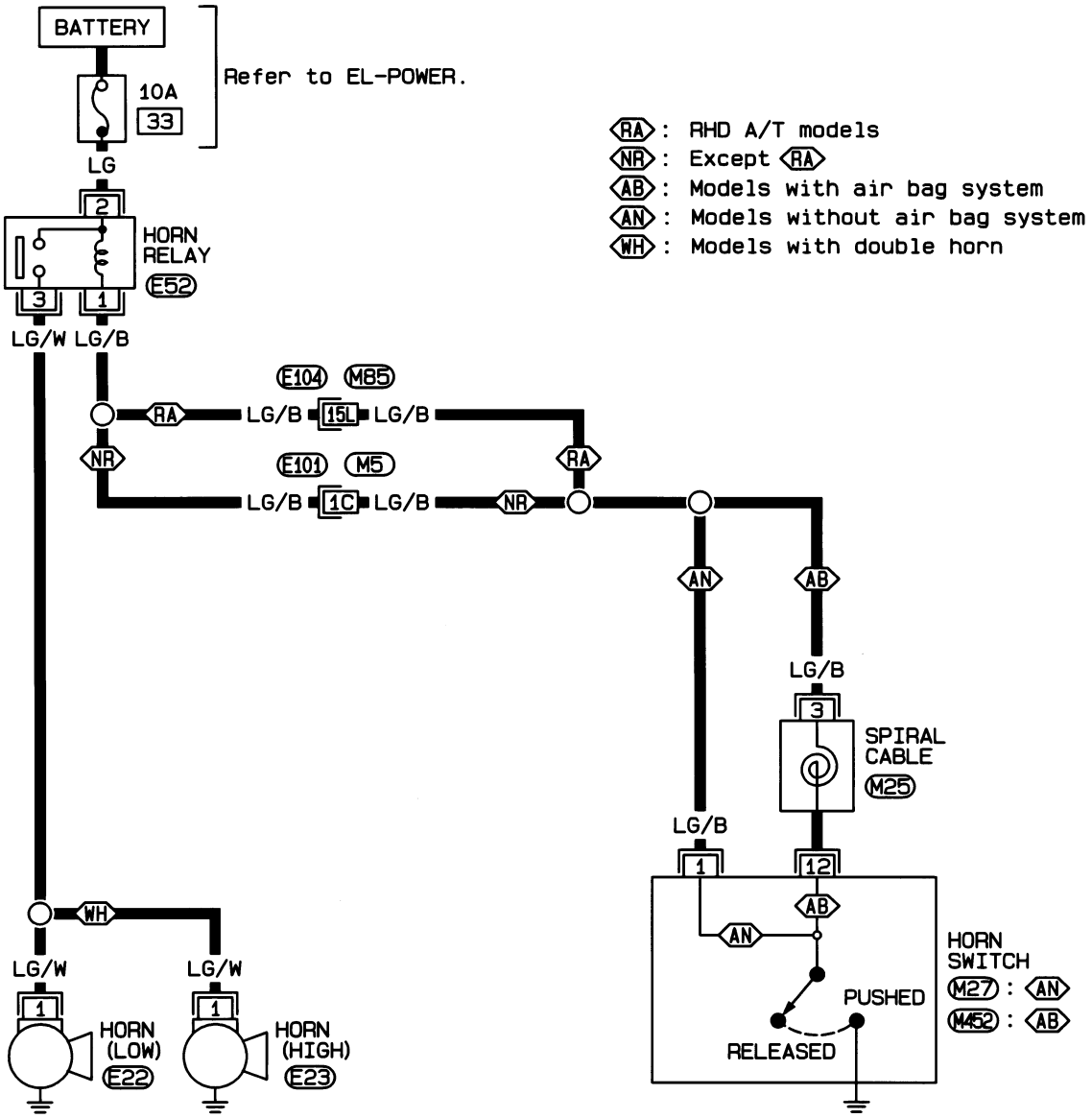

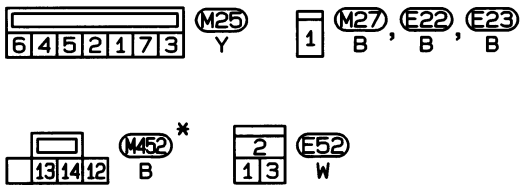

* : This connector is not shown in "HARNESS LAYOUT".

Refer to last page (Foldout page).

M5, E101
M85, E104

GI
MA
EM
LC
EC
FE
CL
MT
AT
TF
PD
FA
RA
BR
ST
RS
BT
HA
EL
IDX

HEL544B

Wiring Diagram — AUDIO —/LHD Models Type-1

WITH 1-SPEAKER EXCEPT FOR EUROPE

EL-AUDIO-01

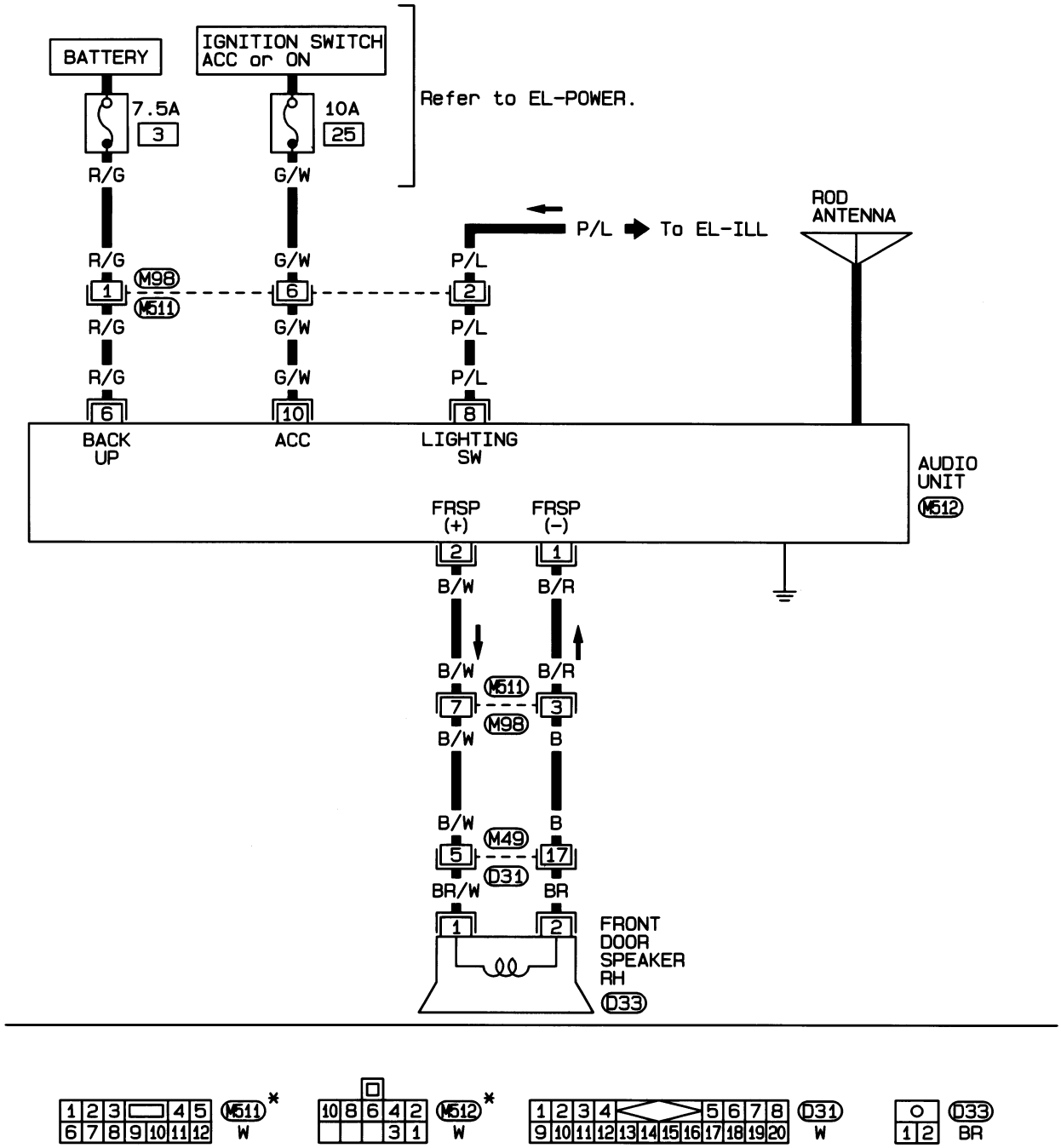

* : This connector is not shown in "HARNESS LAYOUT".

HEL545B

Wiring Diagram — AUDIO —/LHD Models Type-3

WITH 2 OR 4 SPEAKERS EXCEPT FOR EUROPE

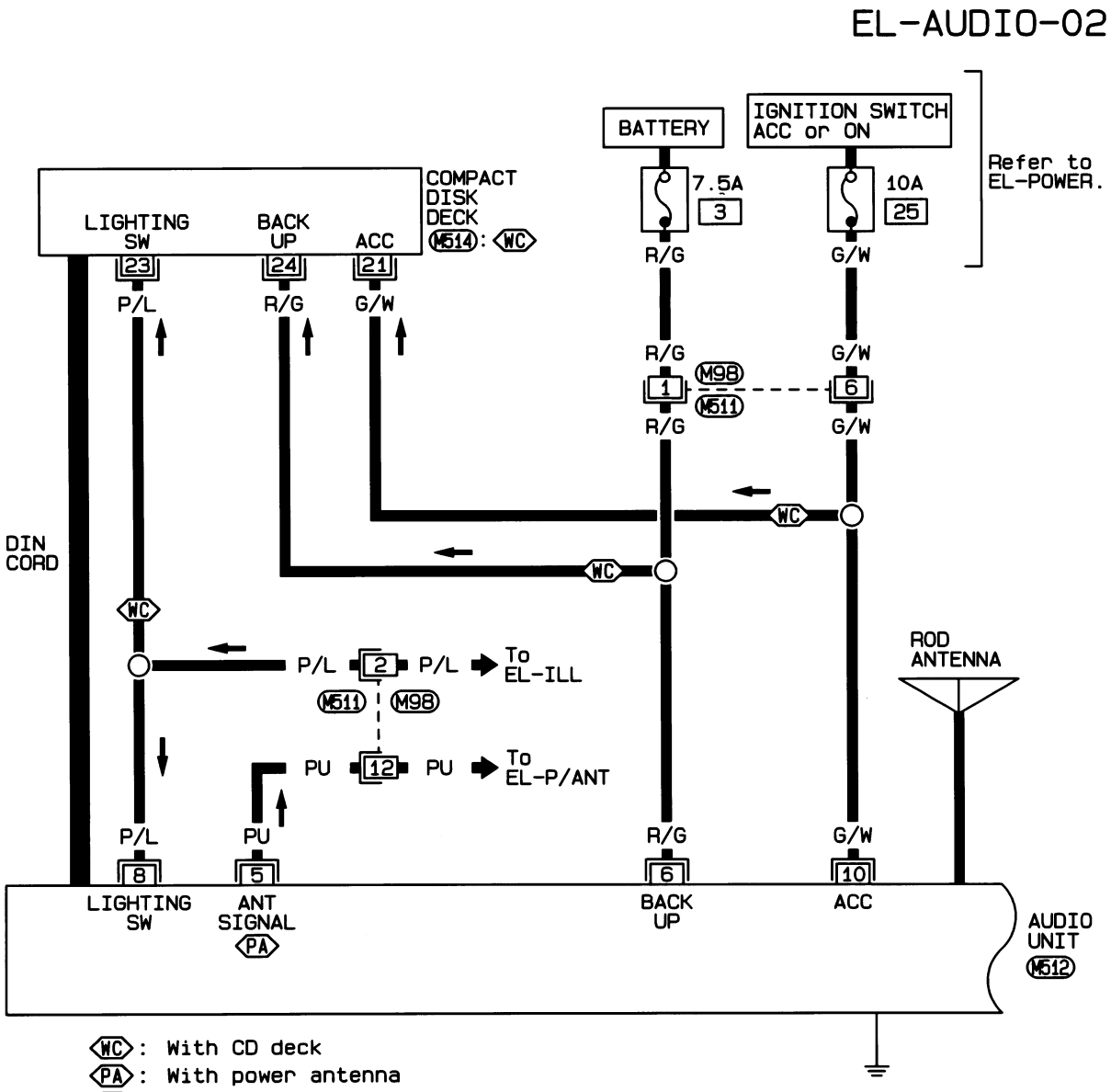

* : This connector is not shown in "HARNESS LAYOUT".

HEL546B

Wiring Diagram — AUDIO —/LHD Models Type-3 (Cont'd)

EL-AUDIO-03

4S : Models with 4-speakers
CP : CD player or cassette player with AM·FM radio
XC : Except CP
PW : Models with power window
WP : Except PW
*1 ··· PW BR/W, WP B/W
*2 ··· PW BR , WP B

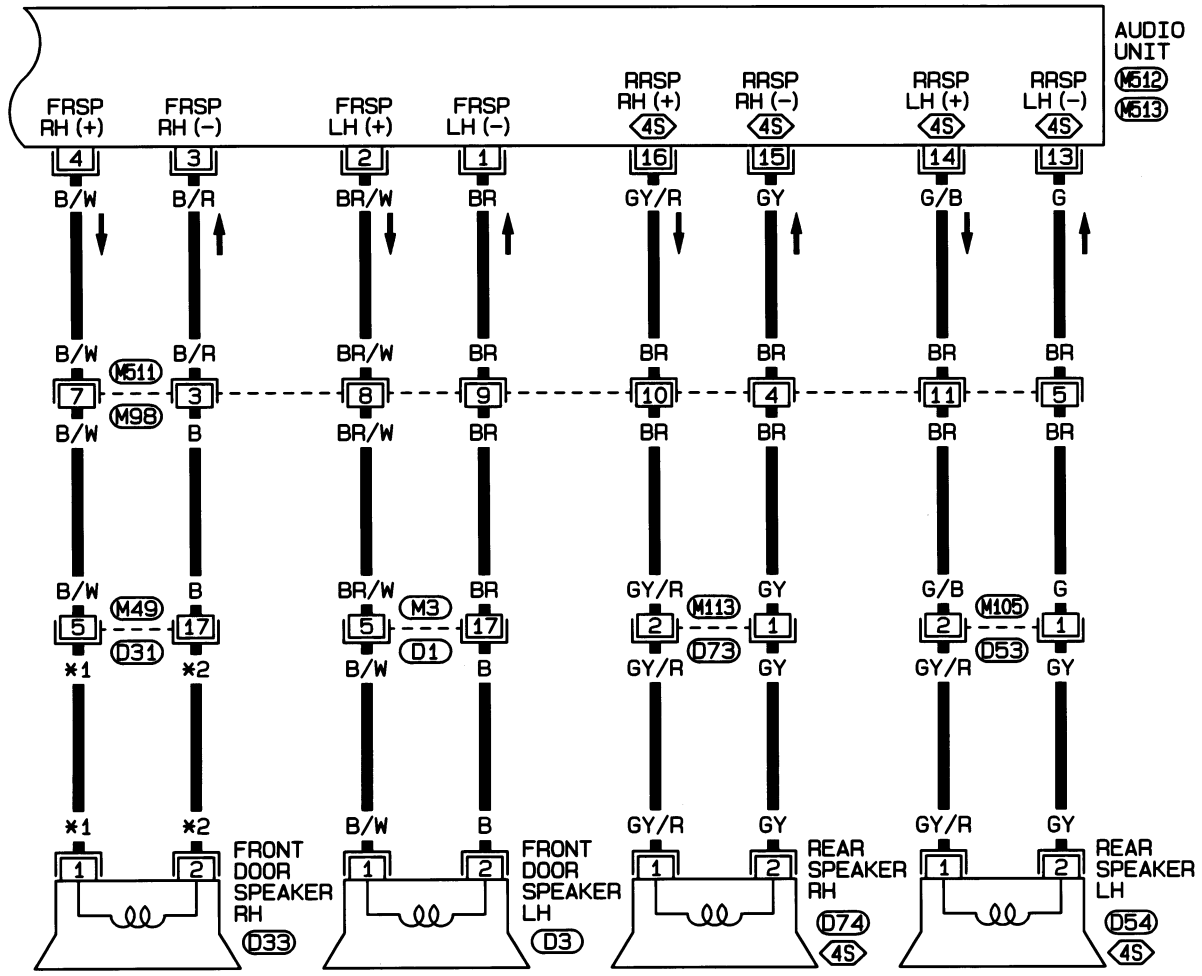

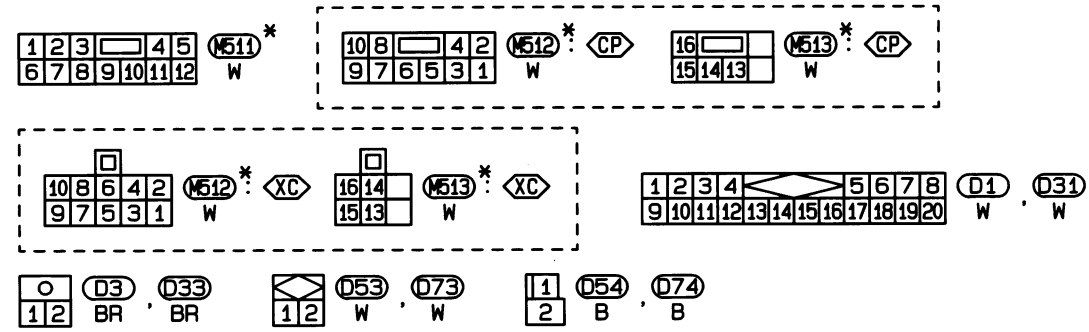

* : This connector is not shown in "HARNESS LAYOUT".

HEL547B

Wiring Diagram — AUDIO —/RHD Models Except for EUROPE

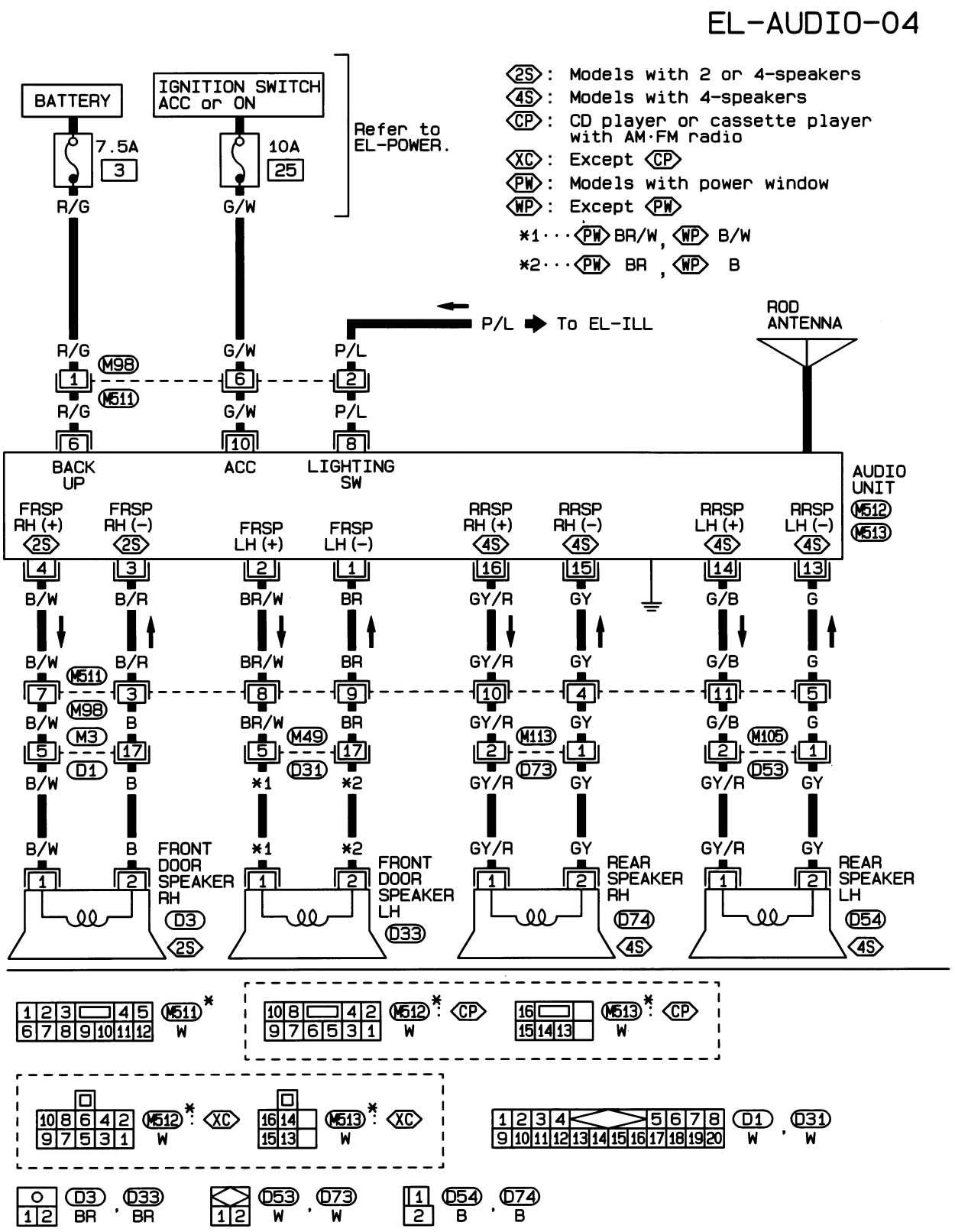

HEL548B

Power Antenna/Wiring Diagram — P/ANT —

EL-P/ANT-01

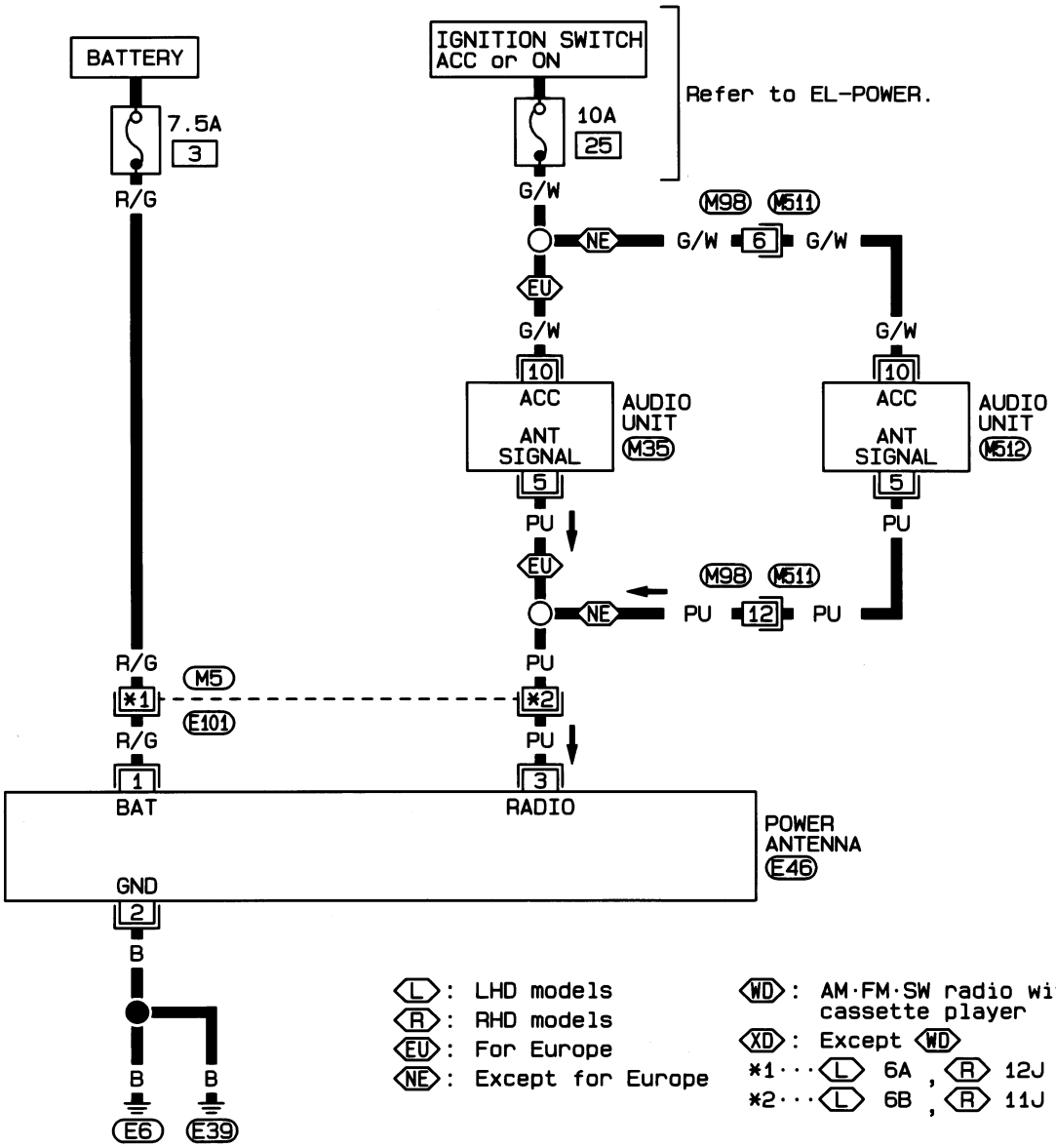

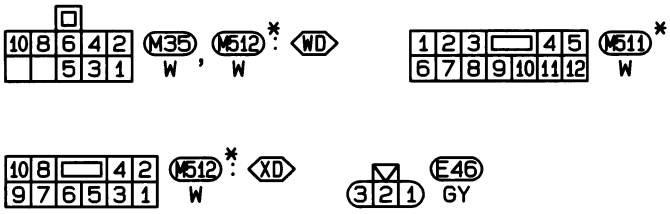

Refer to last page (Foldout page).

M5 , E101

* : This connector is not shown in "HARNESS LAYOUT".

HEL549B

Wiring Diagram — MIRROR —/LHD Models Except for The Middle East

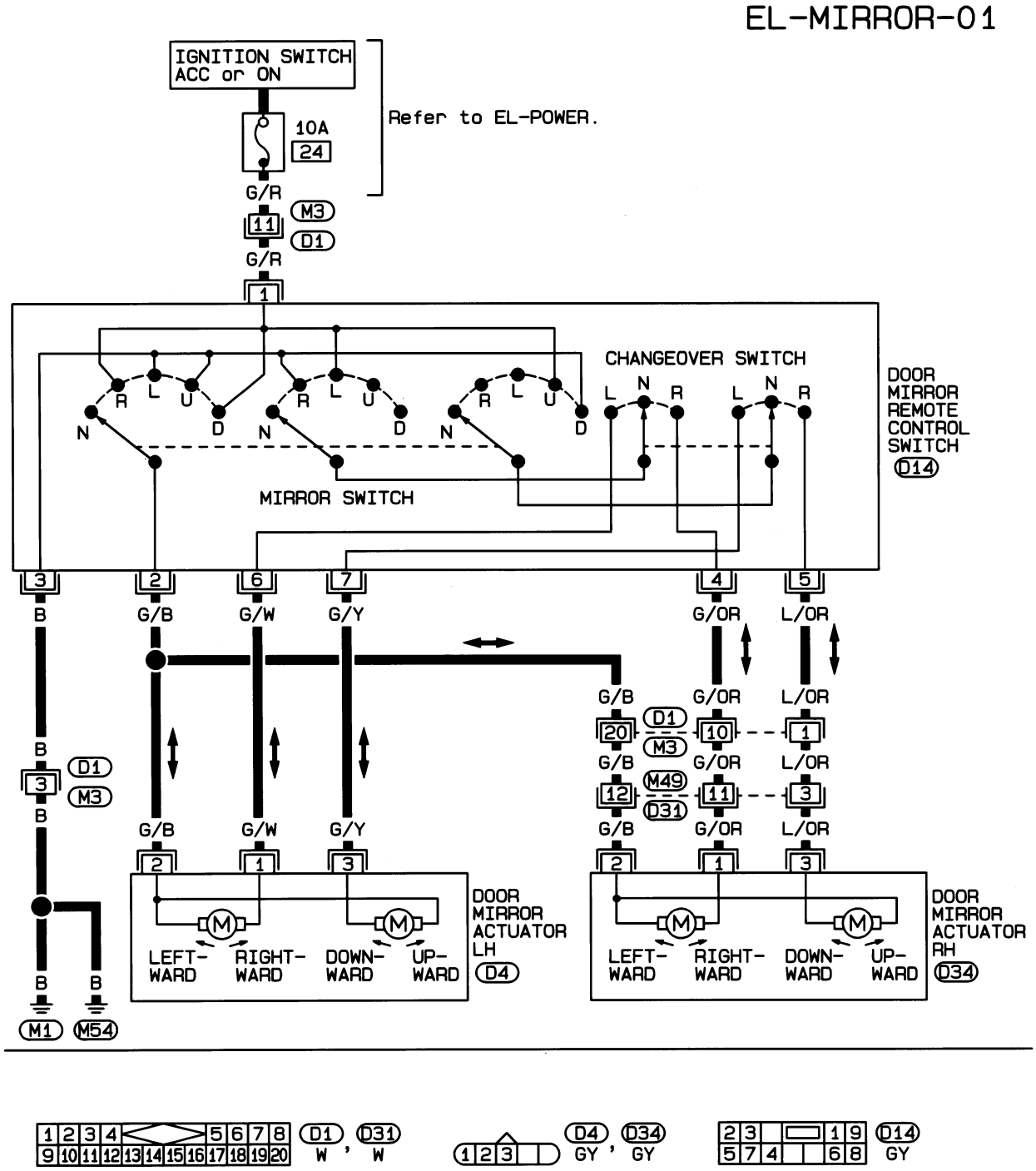

HEL551B

Wiring Diagram — DEF —/LHD Models

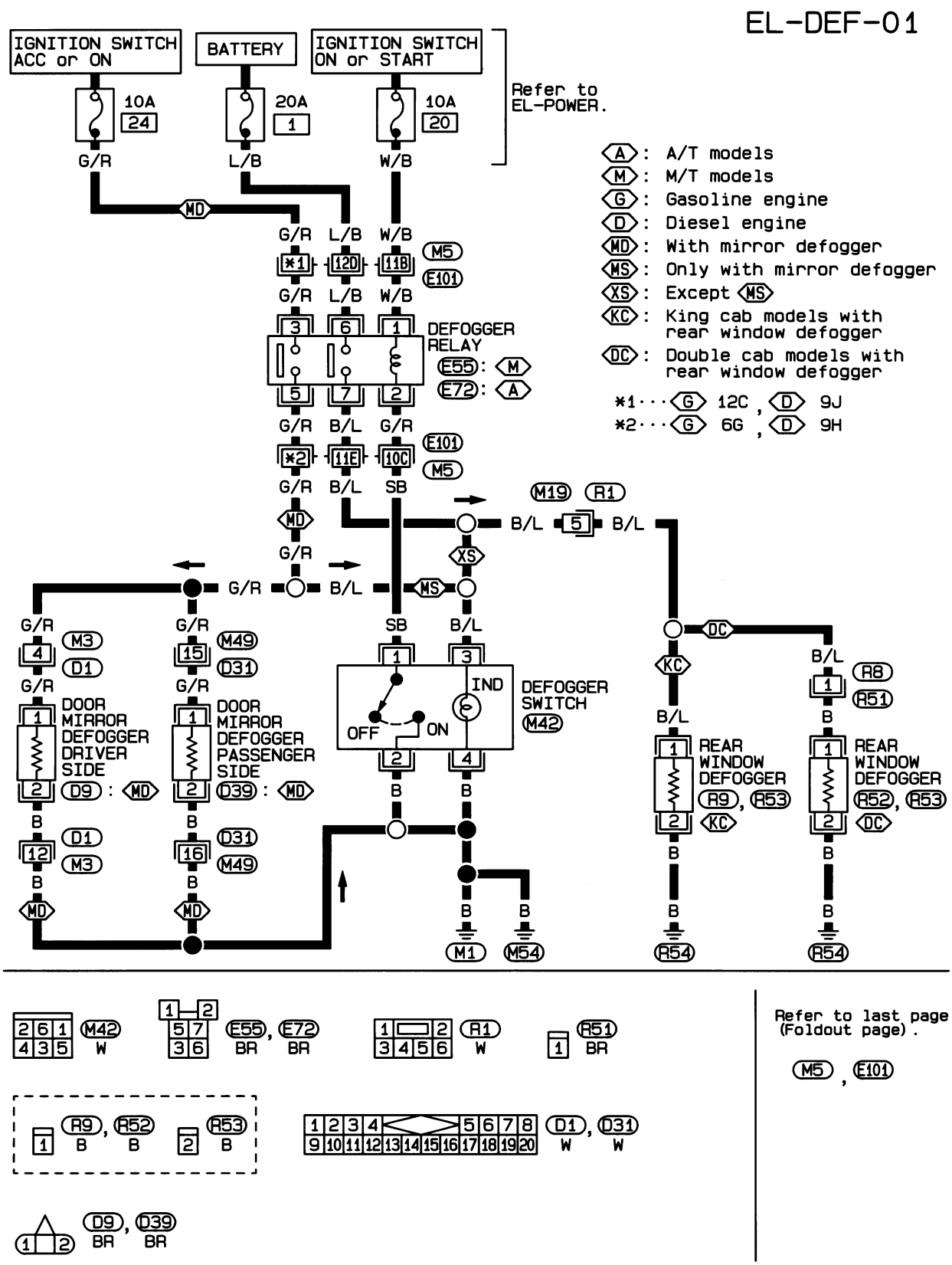

HEL550B

Engine Compartment

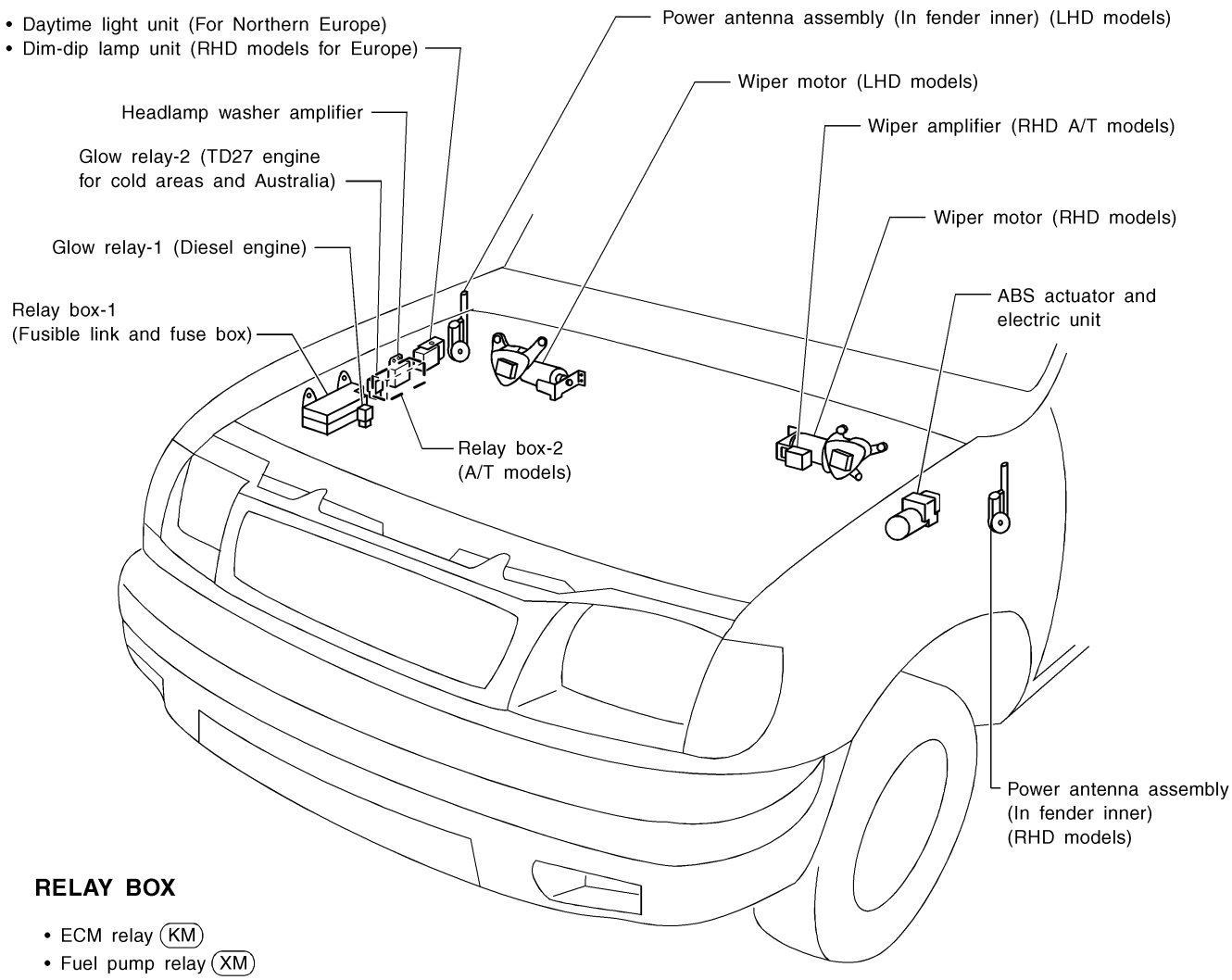

RELAY BOX

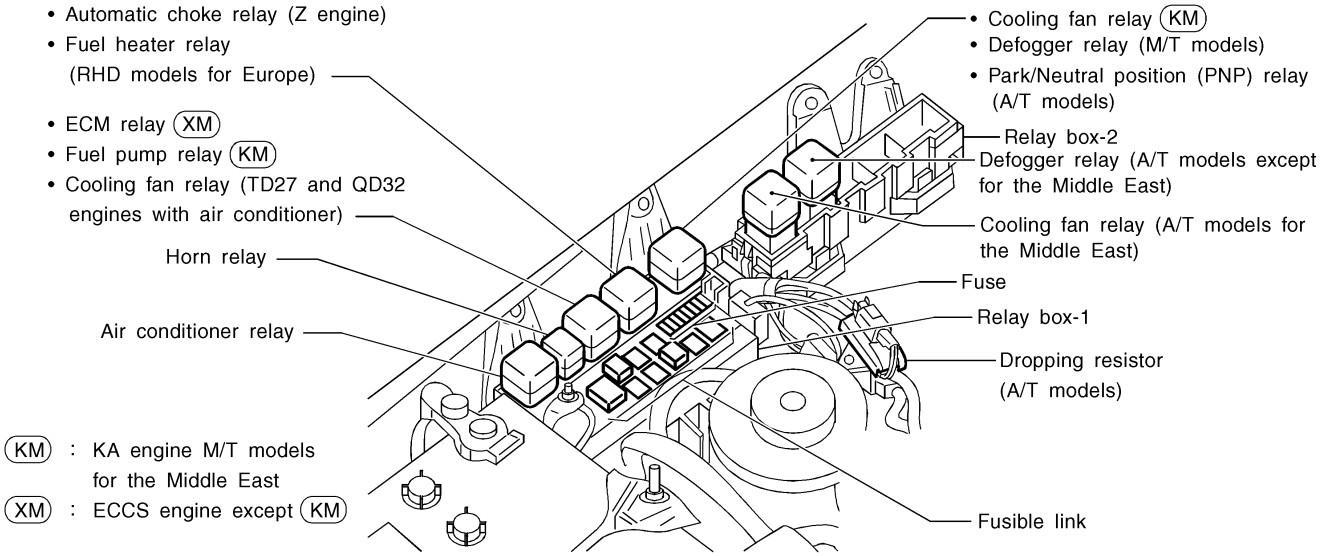

HEL554B

Passenger Compartment

LHD MODELS

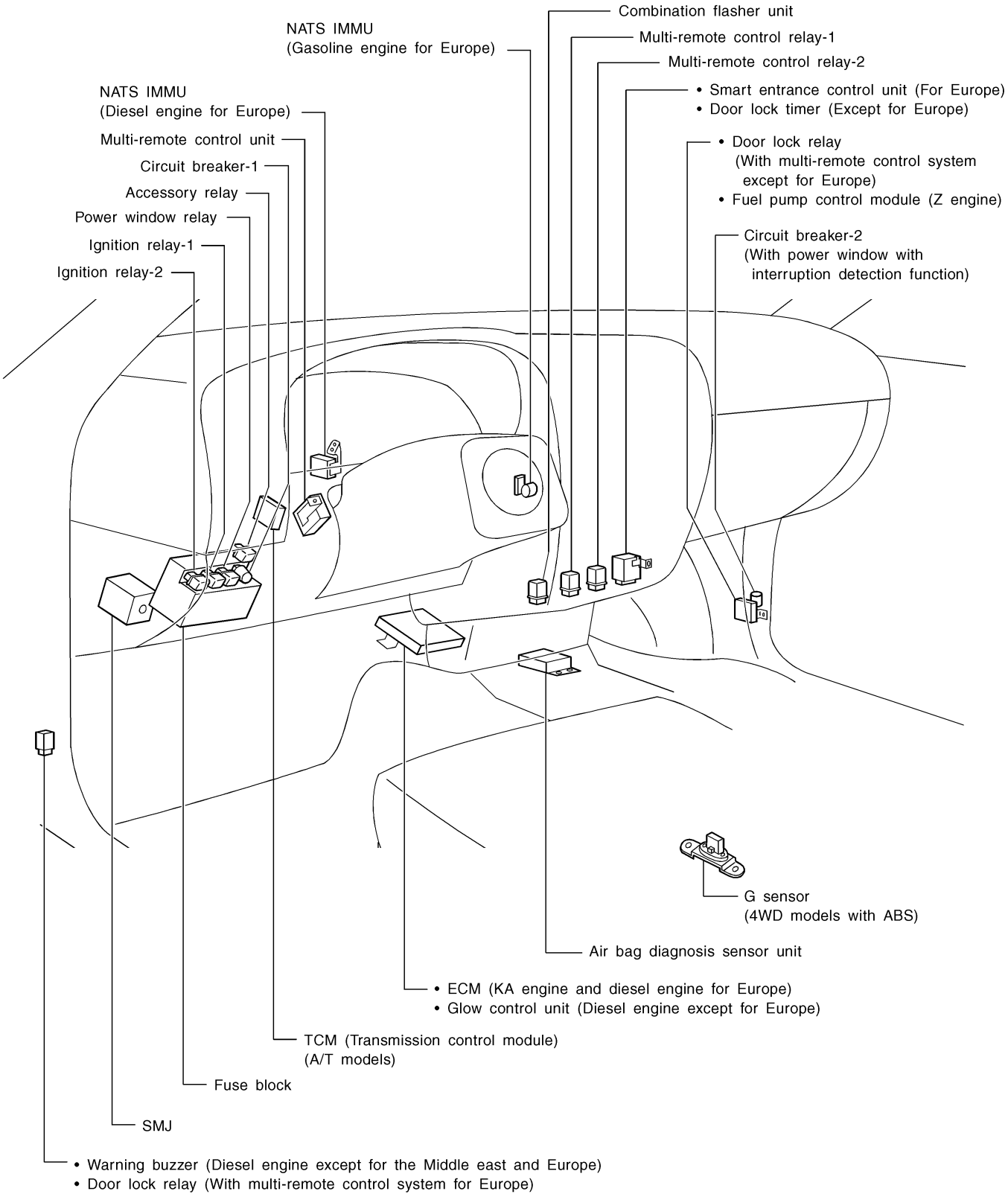

HEL555B

Passenger Compartment (Cont'd)

RHD MODELS

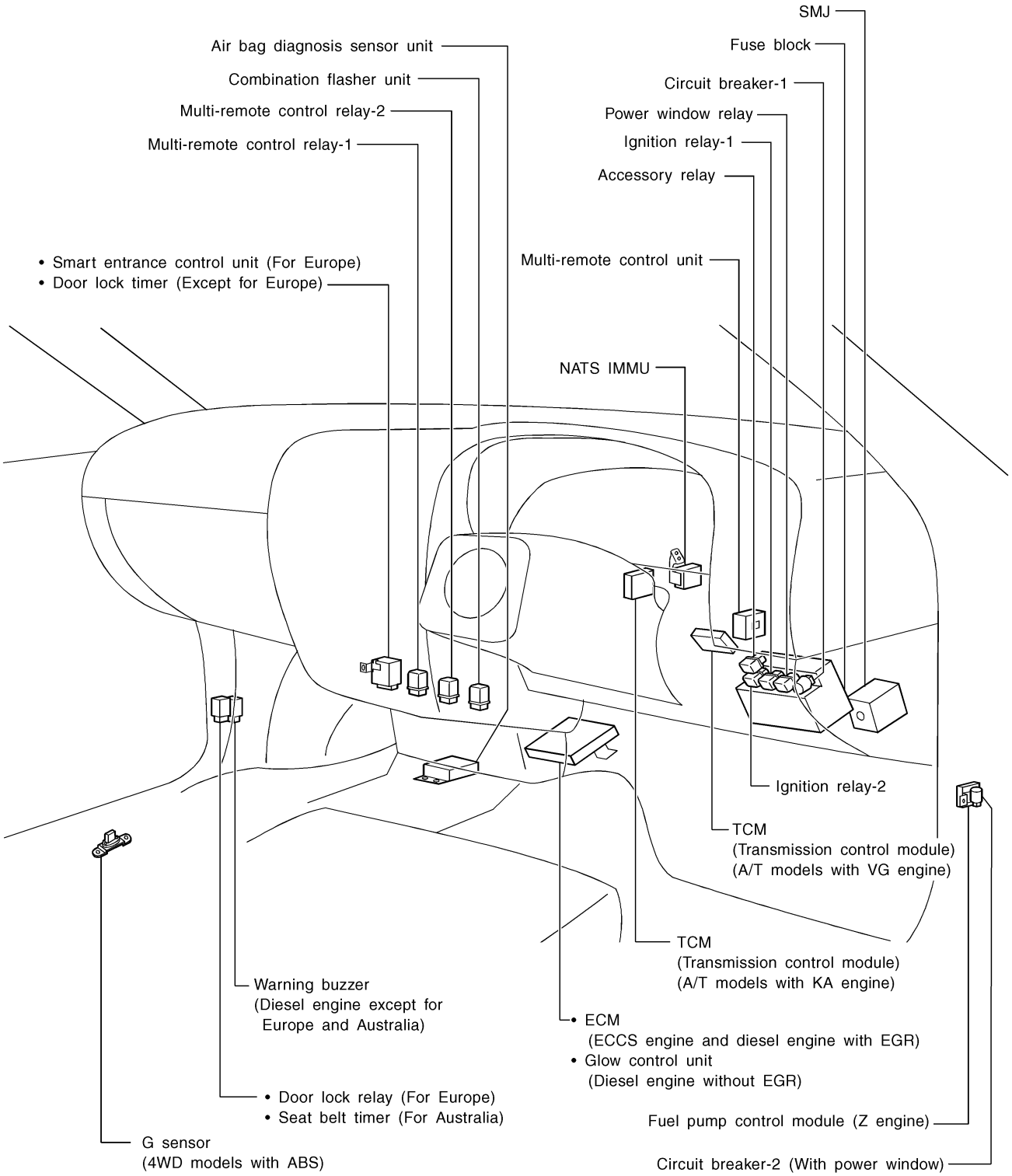

HEL556B

Main Harness

INSTRUMENT PANEL — LHD MODELS

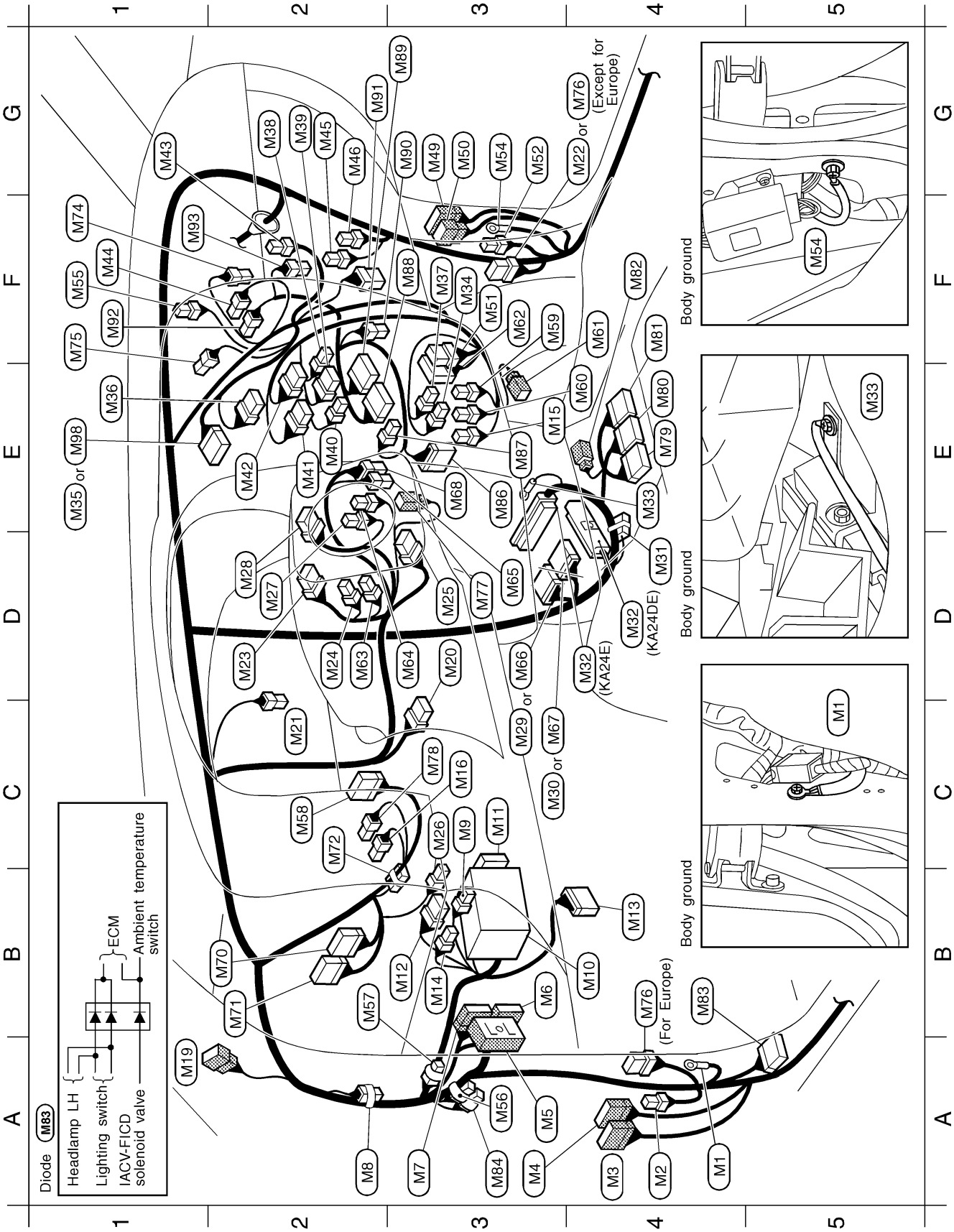

HEL557B

A4	M1	—	Body ground
A4	M2	W/2	Warning buzzer (Diesel engine except for Europe and the Middle East)
A4	M3	W/20	To D1
A3	M4	W/12	To D2 (With power window)
A3	M5	SMJ	To E101
B3	M6	W/24	To N1
A3	M7	BR/24	To N2
A2	M8	–/2	Diode (Diesel engine except for Europe and the Middle East)
C3	M9	L/4	Accessory relay
B4	M10	—	Fuse block
C3	M11	GY/14	Data link connector for CONSULT (With air bag, ABS or ECM)
B3	M12	W/6	Fuse block
B4	M13	B/10	Check connector (Z24S)
B3	M14	W/4	Fuse block
E3	M15	B/3	Combination flasher unit
C3	M16	B/2	Stop lamp switch
A1	M19	W/6	To R1
D3	M20	W/6	Ignition switch
C2	M21	W/1	Parking brake switch (Stick type)
G4	M22	W6	Fuel pump control module (Z24S)
D2	M23	BR/8	Lighting switch • Turn signal lamp switch
D2	M24	BR/4	Lighting switch
D3	M25	Y/7	Spiral cable (With air bag)
C3	M26	L/2	A/T check switch (A/T models)
D2	M27	B/1	Horn switch (Without air bag)
D2	M28	GY/8	Wiper and washer switch
C3	M29	W/12	Glow control unit (TD27 engine except for cold areas and QD engine)
C3	M30	W/16	Glow control unit (TD27 engine for cold areas)
D4	M31	GY/6	Joint connector-1 (KA engine)
D4	M32	W/64	ECM (KA24E)
		W/48	ECM (KA24DE)
E4	M33	—	Body ground (KA24E)
F3	M34	W/2	Ashtray illumination (GL and S-GL grade for the Middle East)
E1	M35	W/10	Audio unit (For Europe)
E1	M36	W/6	Audio unit (KA24E and with 4-speakers radio for Europe)
F3	M37	B/2	Cigarette lighter
G2	M38	W/3	A/C switch (Without auto A/C)
G2	M39	W/6	Fan switch (Without auto A/C)
E2	M40	W/2	Fan switch illumination (Without auto A/C)
E2	M41	W/8	Hazard switch
E2	M42	W/6	Defogger switch (For Europe, SE grade with KA engine with 2WD except for the Middle East and SE grade with diesel engine)
G1	M43	Y/2	Air bag module passenger side
F1	M44	BR/4	Thermo control amplifier
G2	M45	BR/4	Fan resistor (Without auto A/C)
G2	M46	W/2	Blower motor
G3	M49	W/20	To D31
G3	M50	W/6	To D32 (With power window)
F3	M51	W/8	Door lock timer (With power window except for Europe)
G3	M52	W/2	Circuit breaker-2 (With power window with interruption detection function)
G3	M54	—	Body ground
F1	M55	W/2	NATS security indicator (For Europe)
A3	M56	–/2	Diode (*1)
B2	M57	–/2	Diode (*1)
C2	M58	W/12	Multi-remote control unit (*1)
F3	M59	BR/6	Multi-remote control relay-2 (*1)
F4	M60	B/5	Multi-remote control relay-1 (*1)
F4	M61	B/2	Jumping connector (*1)
F3	M62	W/18	Smart entrance control unit (For Europe)
D2	M63	W/3	Rear fog lamp switch (For Europe and China)
D3	M64	W/2	Key switch (For Europe except Single cab)
D3	M65	W/4	NATS antenna amp. (Diesel engine for Europe)
D3	M66	GY/20	ECM (Diesel engine for Europe)
C3	M67	GY/16	ECM (Diesel engine for Europe)
E3	M68	W/8	NATS IMMU (KA24E)
B2	M70	W/24	TCM (Transmission control module) (A/T models)
B2	M71	GY/24	TCM (Transmission control module) (A/T models)
C2	M72	–/6	Joint connector-2 (A/T models)
F1	M74	W/2	Intake air temperature sensor (With auto A/C)
F1	M75	B/2	Sunload sensor (With auto A/C)
B4•G4	M76	W/6	Door lock relay (King and Double cab for Europe and *1)
D3	M77	BR/2	Key switch (*1 for Turkey)
C3	M78	L/2	Shift lock brake switch (A/T models)
E4	M79	Y/12	Air bag diagnosis sensor unit (With pre-tensioner seat belt)
E4	M80	Y/20	Air bag diagnosis sensor unit
F4	M81	Y/12	Air bag diagnosis sensor unit (With pre-tensioner seat belt)
F4	M82	W/2	Jumping connector (With pre-tensioner seat belt)
B4	M83	L/10	Diode (KA24DE)
A3	M84	BR/2	Resistor (A/T models)
E3	M86	BR/10	Mode door motor (With auto A/C)
E3	M87	W/2	In-vehicle sensor (With auto A/C)
F3	M88	GY/20	A/C auto amp. (With auto A/C)
G3	M89	GY/4	A/C auto amp. (With auto A/C)
G3	M90	L/2	Aspirator motor (With auto A/C)
G2	M91	B/6	Air mix door motor (With auto A/C)
F1	M92	W/4	Fan control amp. (With auto A/C)
F1	M93	W/4	Intake door motor (With auto A/C)
E1	M98	W/12	Audio unit (Via sub-harness) (Except for Europe)

Diode M8

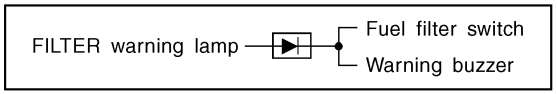

Diode M56, M57

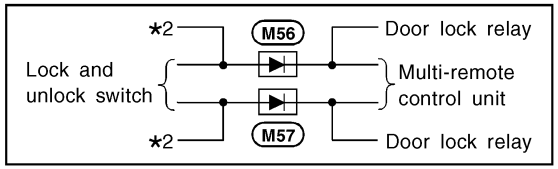

*1 : With multi-remote control system
*2 : For Europe····Smart entrance control unit
Except for Europe····Door lock timer

Main Harness (Cont'd)

INSTRUMENT PANEL — RHD MODELS

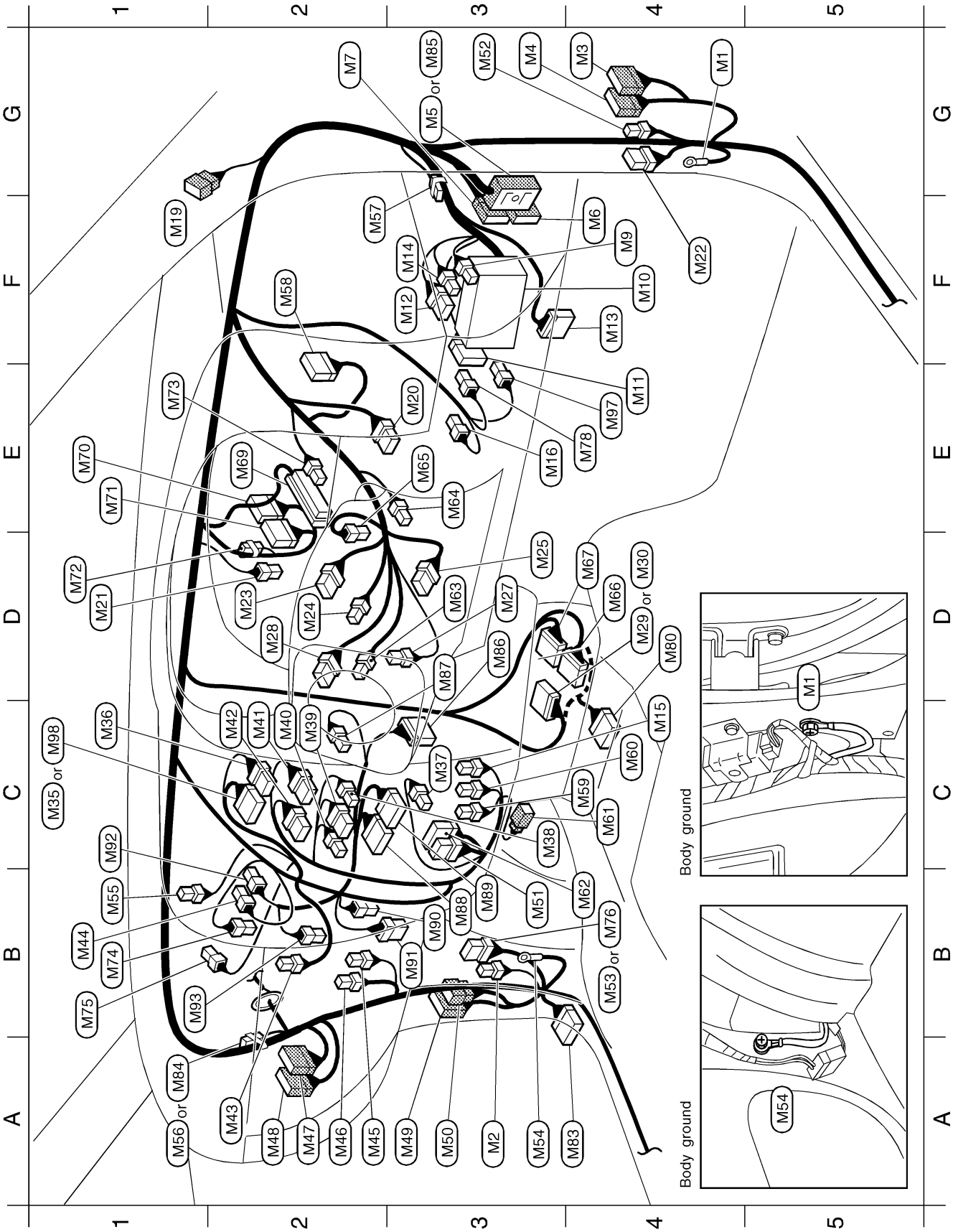

HEL559B

G4	M1	—	Body ground
A3	M2	W/2	Warning buzzer (Diesel engine except for Europe and Australia)
G4	M3	W/20	To D1
G3	M4	W/12	To D2 (With power window)
G3	M5	SMJ	To E101 (M/T models)
F4	M6	W/24	To N1
G2	M7	BR/24	To N2
F4	M9	L/4	Accessory relay
F4	M10	—	Fuse block
E4	M11	GY/14	Data link connector for CONSULT (With air bag, ABS or ECM)
F3	M12	W/6	Fuse block
F4	M13	B/10	Check connector (Z engine)
F3	M14	W/4	Fuse block
C4	M15	B/3	Combination flasher unit
E3	M16	B/2	Stop lamp switch
F1	M19	W/6	To R1
E3	M20	W/6	Ignition switch
D1	M21	W/1	Parking brake switch (Stick type)
F4	M22	W6	Fuel pump control module (Z engine)
D2	M23	BR/8	Lighting switch • Turn signal lamp switch
D2	M24	BR/4	Lighting switch
D3	M25	Y/7	Spiral cable (With air bag)
D3	M27	B/1	Horn switch (Without air bag)
D2	M28	GY/8	Wiper and washer switch
D4	M29	W/12	Glow control unit (TD27 engine without EGR except for Australia and QD engine)
D4	M30	W/16	Glow control unit (TD27 engine for Australia)
C1	M35	W/10	Audio unit (For Europe)
C1	M36	W/6	Audio unit (Double cab models for Europe)
C3	M37	B/2	Cigarette lighter
C3	M38	W/3	A/C switch (Without auto A/C)
C2	M39	W/6	Fan switch (Without auto A/C)
C2	M40	W/2	Fan switch illumination (Without auto A/C)
C2	M41	W/8	Hazard switch
C2	M42	W/6	Defogger switch (For Europe and with power window)
A2	M43	Y/2	Air bag module passenger side
B1	M44	BR/4	Thermo control amplifier
A2	M45	BR/4	Fan resistor (Without auto A/C)
A2	M46	W/2	Blower motor
A2	M47	W/16	To F55 (ECCS engine)
A2	M48	W/24	To F54 (ECCS engine)
A3	M49	W/20	To D31
A3	M50	W/6	To D32 (With power window)
B3	M51	W/8	Door lock timer (With power window except for Europe)
G3	M52	W/2	Circuit breaker-2 (For Europe)
B4	M53	W/8	Seat belt timer (For Australia)
A3	M54	—	Body ground
B1	M55	W/2	NATS security indicator (For Europe)
A1	M56	–/2	Diode (For multi-remote control system)
F2	M57	–/2	Diode (For multi-remote control system)
F2	M58	W/12	Multi-remote control unit (For Europe except Single cab)
C4	M59	BR/6	Multi-remote control relay-2
C4	M60	B/5	Multi-remote control relay-1
C4	M61	B/2	Jumping connector (For Europe except Single cab)
B4	M62	W/18	Smart entrance control unit (For Europe)
D3	M63	W/3	Rear fog lamp switch (For Europe)
E3	M64	W/2	Key switch (For Europe except Single cab)
E3	M65	W/4	NATS antenna amp. (For Europe)
D4	M66	GY/20	ECM (Diesel engine with EGR)
D4	M67	GY/16	ECM (Diesel engine with EGR)
E2	M69	W/48	TCM (Transmission control module) (A/T models with VG engine)
E1	M70	W/24	TCM (Transmission control module) (A/T models with KA engine)
E1	M71	GY/24	TCM (Transmission control module) (A/T models with KA engine)
D1	M72	–/6	Joint connector-2 (A/T models)
E1	M73	W/4	A/T device (A/T models with KA engine)
B1	M74	W/2	Intake air temperature sensor (With auto A/C)
B1	M75	B/2	Sunload sensor (With auto A/C)
B4	M76	W/6	Door lock relay (For Europe except Single cab)
E4	M78	L/2	Shift lock brake switch (A/T models)
D4	M80	Y/20	Air bag diagnosis sensor unit
A4	M83	L/10	Diode (KA engine)
A1	M84	BR/2	Resistor (A/T models)
G3	M85	SMJ	To E104 (A/T models)
D3	M86	BR/10	Mode door motor (With auto A/C)
D3	M87	W/2	In-vehicle sensor (With auto A/C)
B3	M88	GY/20	A/C auto amp. (With auto A/C)
B3	M89	GY/4	A/C auto amp. (With auto A/C)
B3	M90	L/2	Aspirator motor (With auto A/C)
B3	M91	B/6	Air mix door motor (With auto A/C)
C1	M92	W/4	Fan control amp. (With auto A/C)
B1	M93	W/4	Intake door motor (With auto A/C)
E4	M97	W/2	Kickdown switch (A/T models with VG engine)
C1	M98	W/12	Audio unit (Via sub-harness) (Except for Europe)

Engine compartment

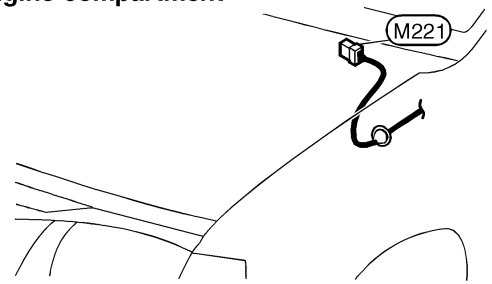

M221 W/6 : Wiper motor (Z engine and diesel engines)

Diode M56, M57

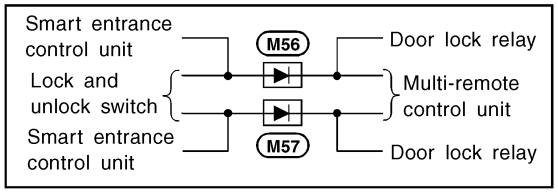

Diode M83

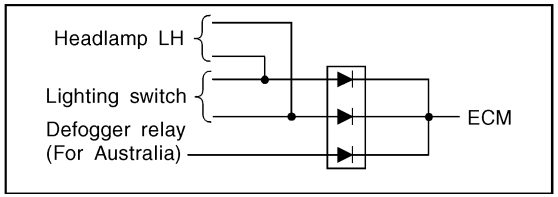

Main Harness (Cont'd)

BODY SIDE — LHD MODELS

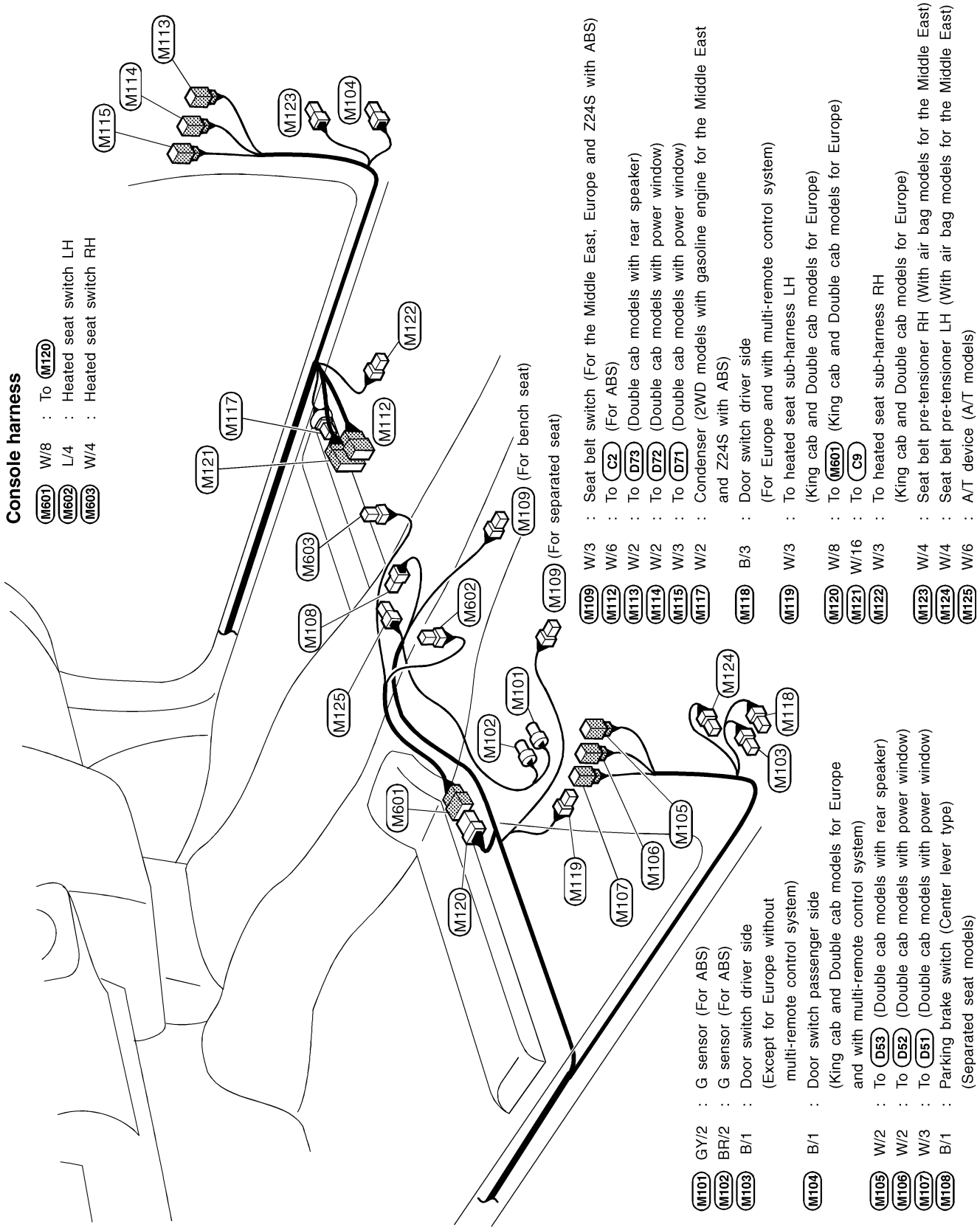

HEL561B

Main Harness (Cont'd)

BODY SIDE — RHD MODELS

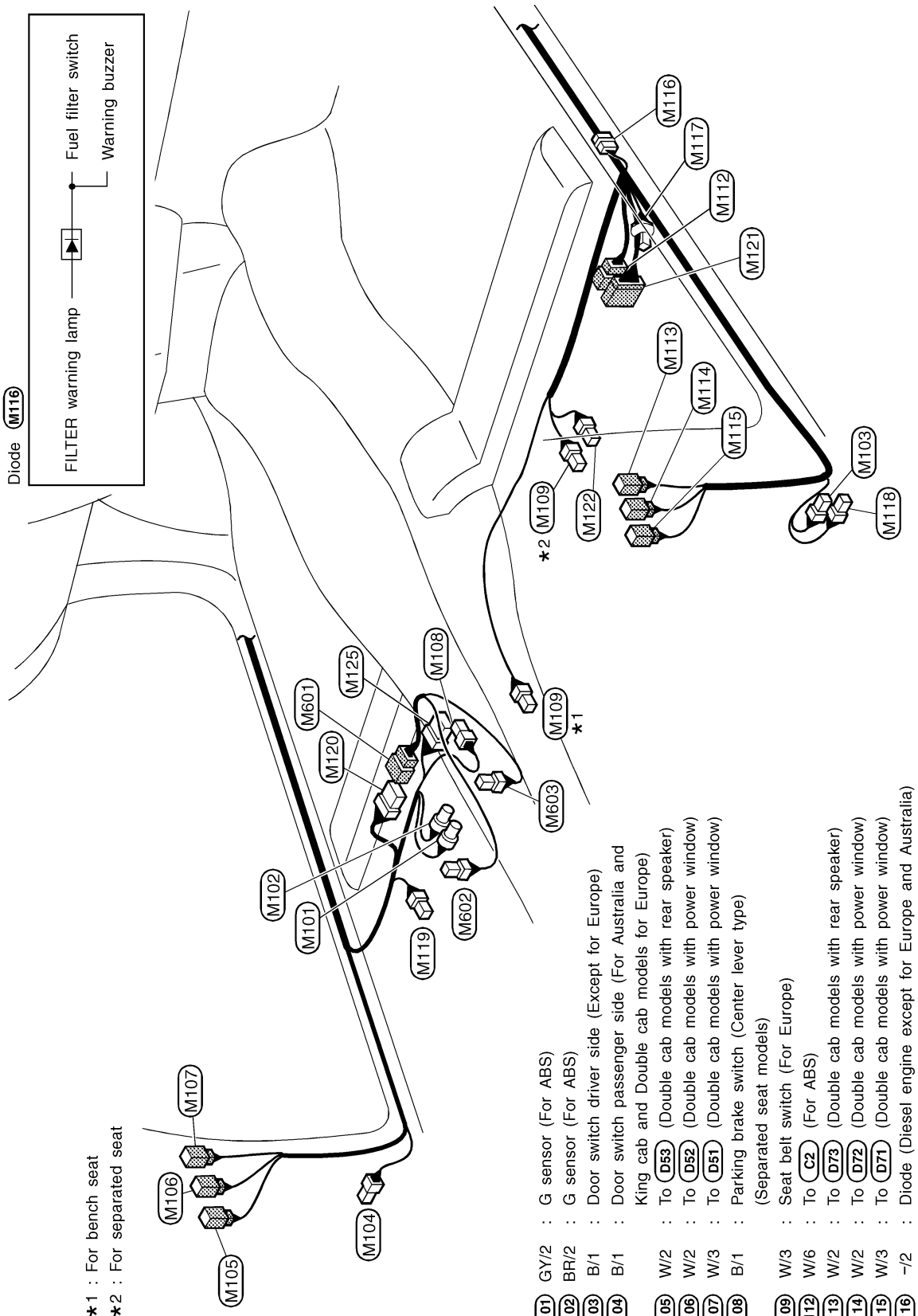

*1 : For bench seat
*2 : For separated seat

M101	GY/2	:	G sensor (For ABS)
M102	BR/2	:	G sensor (For ABS)
M103	B/1	:	Door switch driver side (Except for Europe)
M104	B/1	:	Door switch passenger side (For Australia and King cab and Double cab models for Europe)
M105	W/2	:	To D53 (Double cab models with rear speaker)
M106	W/2	:	To D52 (Double cab models with power window)
M107	W/3	:	To D51 (Double cab models with power window)
M108	B/1	:	Parking brake switch (Center lever type) (Separated seat models)
M109	W/3	:	Seat belt switch (For Europe)
M112	W/6	:	To C2 (For ABS)
M113	W/2	:	To D73 (Double cab models with rear speaker)
M114	W/2	:	To D72 (Double cab models with power window)
M115	W/3	:	To D71 (Double cab models with power window)
M116	–/2	:	Diode (Diesel engine except for Europe and Australia)
M117	W/2	:	Condenser (Gasoline engine)
M118	B/3	:	Door switch driver side (For Europe)
M119	W/3	:	To heated seat sub-harness LH (King cab and Double cab models for Europe)
M120	W/8	:	To M601 (King cab and Double cab models for Europe)
M121	W/16	:	To C9
M122	W/3	:	To heated seat sub-harness RH (King cab and Double cab models for Europe)
M125	W/6	:	A/T device (A/T models with VG engine)

Console harness

M601	W/8	:	To M120
M602	L/4	:	Heated seat switch LH
M603	W/4	:	Heated seat switch RH

HEL307B

Engine Room Harness

LHD MODELS — GASOLINE ENGINE

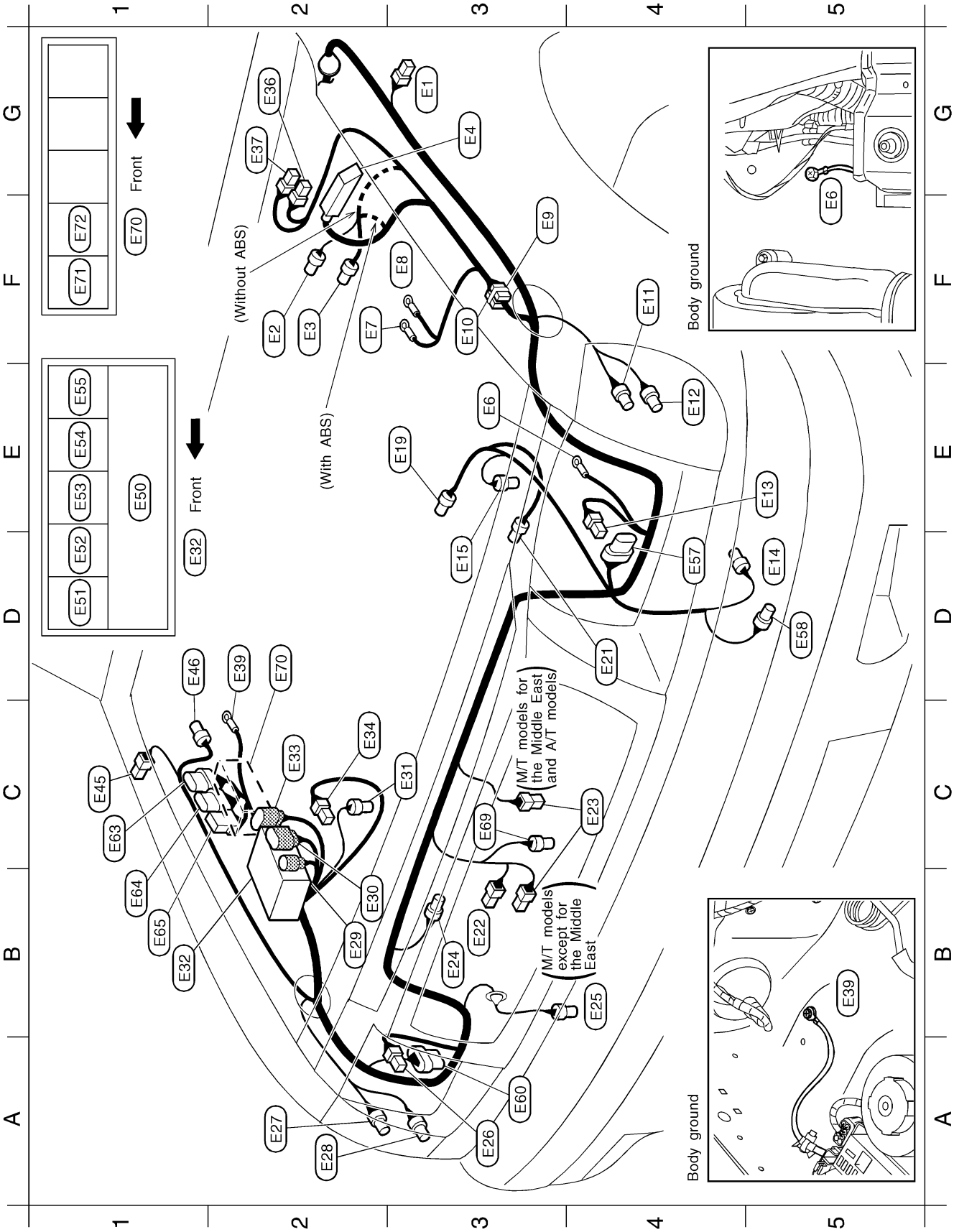

HEL562B

G3 E1	B/2	:	Side turn signal lamp LH (For Europe and China)
F2 E2	GY/2	:	Brake fluid level switch
F2 E3	GY/3	:	Heated oxygen sensor (KA24E engine)
G3 E4	B/31	:	ABS actuator and electric unit (For ABS)
E3 E6	—	:	Body ground
F2 E7	—	:	Ignition coil (Z engine)
F3 E8	—	:	Ignition coil (Z engine)
F3 E9	–/2	:	Resistor (Z engine)
F3 E10	W/2	:	Condenser (Z engine)
F4 E11	GY/3	:	Front combination lamp LH (Except for Europe and China)
E4 E12	BR/3	:	Front combination lamp LH (For Europe and China)
E5 E13	B/3	:	Headlamp LH
D5 E14	GY/2	:	Washer motor
D3 E15	BR/2	:	Front wheel sensor LH (For ABS)
E3 E19	GY/3	:	Distributor (Z engine)
D4 E21	B/1	:	Compressor (Z engine)
B3 E22	B/1	:	Horn low
C4 E23	B/1	:	Horn high
B3 E24	GY/2	:	Cooling fan motor (KA engine for the Middle East)
B4 E25	B/4	:	Triple-pressure switch
A3 E26	B/3	:	Headlamp RH
A2 E27	GY/3	:	Front combination lamp RH (Except for Europe and China)
A2 E28	BR/3	:	Front combination lamp RH (For Europe and China)
B2 E29	GY/2	:	To E204
B2 E30	GY/8	:	To E203
C3 E31	GY/2	:	Front wheel sensor RH (For ABS)
B1 E32	—	:	Relay box-1 (Fusible link and fuse box)
C2 E33	SB/8	:	To E205 (KA engine)
C2 E34	B/1	:	Battery
G2 E36	B/1	:	ISC-FI pot control solenoid valve (Z engine)
G2 E37	B/1	:	ISC-FI pot control solenoid valve (Z engine)
D2 E39	—	:	Body ground
C1 E45	B/2	:	Side turn signal lamp RH (For Europe and China)
D1 E46	GY/3	:	Power antenna (For the Middle East except 4WD models with ABS)
E1 E50	—	:	Fusible link and fuse box
D1 E51	L/4	:	Air conditioner relay
D1 E52	W/3	:	Horn relay
E1 E53	L/4	:	ECM relay (KA engine for Europe)
	BR/6	:	ECM relay (KA engine M/T models except for Europe and the Middle East, and A/T models)
	L/4	:	Fuel pump relay (KA engine M/T models for the Middle East)
E1 E54	B/5	:	Automatic choke relay (Z engine)
	L/4	:	Fuel pump relay (KA engine except M/T models for the Middle East)
	BR/6	:	ECM relay (KA engine M/T models for the Middle East)
E1 E55	L/4	:	Cooling fan relay (KA engine M/T models for the Middle East)
	BR/6	:	Park/Neutral position (PNP) relay (A/T models)
	BR/6	:	Defogger relay (For Europe and KA engine M/T models except for the Middle East)
D4 E57	GY/6	:	Headlamp aiming motor LH (For Europe)
D5 E58	GY/2	:	Headlamp washer motor (For Europe)
A3 E60	GY/6	:	Headlamp aiming motor RH (For Europe)
C1 E63	GY/6	:	Daytime light unit (With daytime light system)
B1 E64	GY/8	:	Daytime light unit (With daytime light system)
B1 E65	W/6	:	Headlamp washer amplifier (For Europe)
C3 E69	BR/2	:	Ambient temperature switch (KA24DE engine)
D2 E70	—	:	Relay box-2 (A/T models)
F1 E71	L/4	:	Cooling fan relay (A/T models for the Middle East)
F2 E72	BR/6	:	Defogger relay (A/T models except for the Middle East)

PASSENGER COMPARTMENT

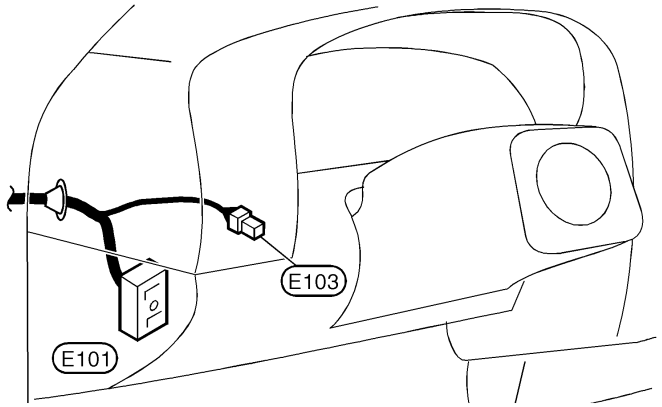

E101	SMJ	:	To M5
E103	B/2	:	Fuse block

Resistor E9

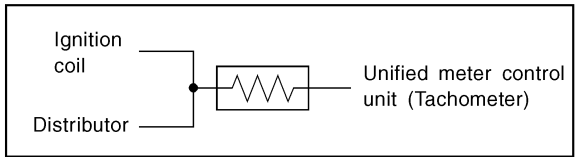

Engine Room Harness (Cont'd)

LHD MODELS — DIESEL ENGINE

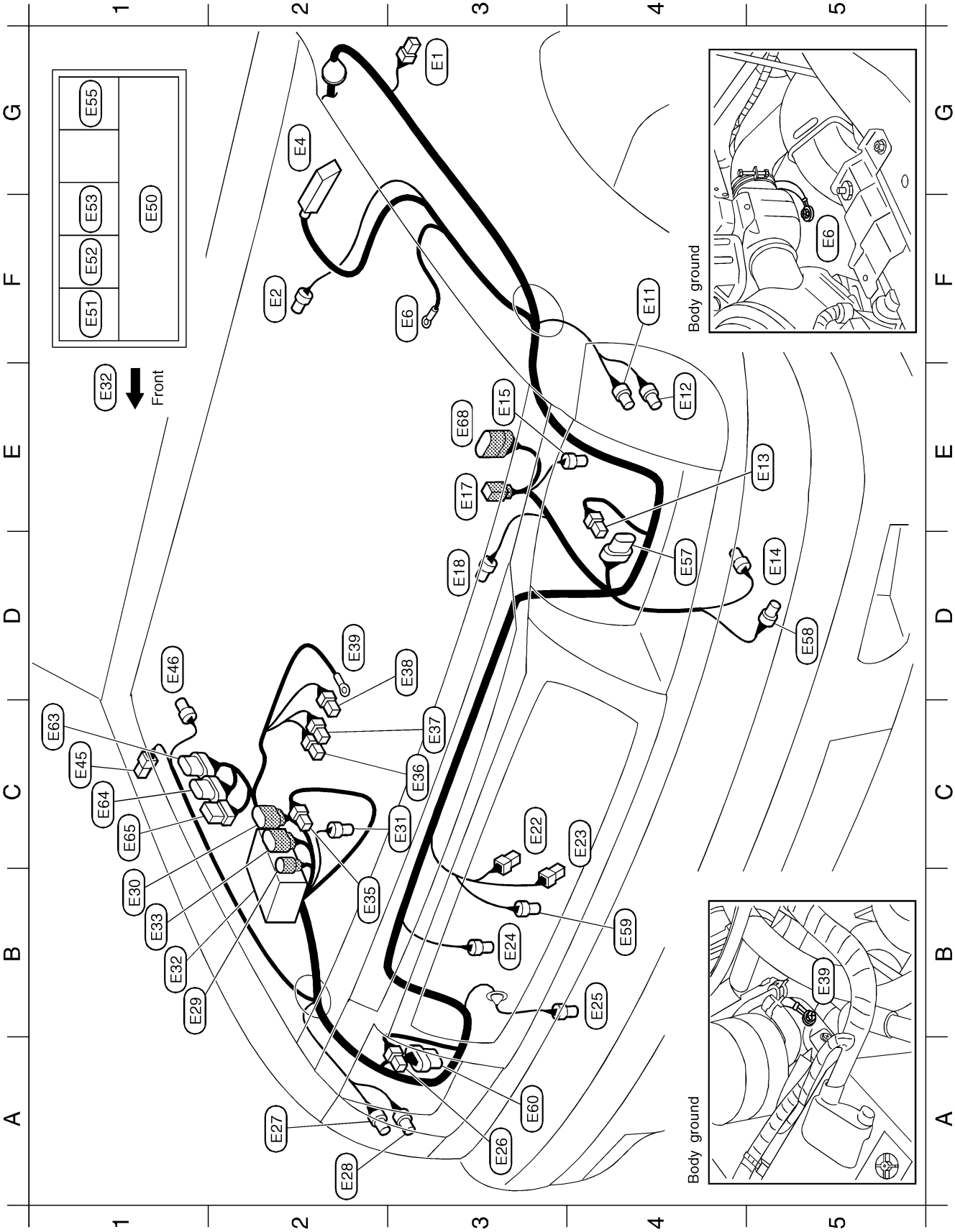

HEL796A

G3	E1	B/2	:	Side turn signal lamp LH (For Europe)
F2	E2	GY/2	:	Brake fluid level switch
G2	E4	B/31	:	ABS actuator and electric unit (For ABS)
F3	E6	—	:	Body ground
F4	E11	GY/3	:	Front combination lamp LH (Except for Europe)
E4	E12	BR/3	:	Front combination lamp LH (For Europe)
E5	E13	B/3	:	Headlamp LH
D5	E14	GY/2	:	Washer motor
E3	E15	BR/2	:	Front wheel sensor LH (For ABS)
E3	E17	B/2	:	To A2
D3	E18	GY/2	:	Thermoswitch (Except TD27 engine except for the Middle East and TD engine 2WD models with ABS for Europe)
C3	E22	B/1	:	Horn low
C4	E23	B/1	:	Horn high
B3	E24	GY/2	:	Cooling fan motor (Except TD27 engine except for the Middle East and TD engine 2WD models with ABS for Europe)
B4	E25	B/4	:	Triple-pressure switch
A3	E26	B/3	:	Headlamp RH
A2	E27	GY/3	:	Front combination lamp RH (Except for Europe)
A2	E28	BR/3	:	Front combination lamp RH (For Europe)
B2	E29	GY/2	:	To E204
B1	E30	GY/8	:	To E203 (For Europe)
C3	E31	GY/2	:	Front wheel sensor RH (For ABS)
B1	E32	—	:	Relay box (Fusible link and fuse box)
B1	E33	SB/8	:	To E205
B2	E35	B/1	:	To E206
C3	E36	B/1	:	IACV-FICD solenoid valve
C3	E37	B/1	:	IACV-FICD solenoid valve
D3	E38	GY/1	:	Vacuum warning switch
D2	E39	—	:	Body ground
C1	E45	B/2	:	Side turn signal lamp RH (For Europe)
D1	E46	GY/3	:	Power antenna (For Europe except 2WD models with ABS)
F1	E50	—	:	Fusible link and fuse box
F1	E51	L/4	:	Air conditioner relay
F1	E52	W/3	:	Horn relay
F1	E53	L/4	:	Cooling fan relay (Except TD27 engine except for the Middle East and TD engine 2WD models with ABS for Europe)
G1	E55	L/4	:	Defogger relay (Except for the Middle East)
D4	E57	GY/6	:	Headlamp aiming motor LH (For Europe)
D5	E58	GY/2	:	Headlamp washer motor (For Europe)
B4	E59	B/2	:	Ambient sensor (For auto A/C) (For Europe except 2WD models with ABS)
A3	E60	GY/6	:	Headlamp aiming motor RH (For Europe)
C1	E63	GY/6	:	Daytime light unit (With daytime light system)
C1	E64	GY/8	:	Daytime light unit (With daytime light system)
C1	E65	W/6	:	Headlamp washer amplifier (For Europe)
E3	E68	GY/10	:	To A13

PASSENGER COMPARTMENT

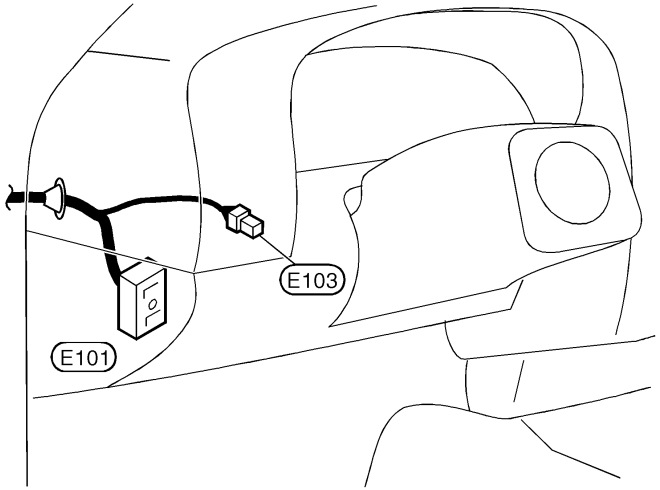

E101	SMJ	:	To M5
E103	B/2	:	Fuse block

Engine Room Harness (Cont'd)

RHD MODELS — GASOLINE ENGINE

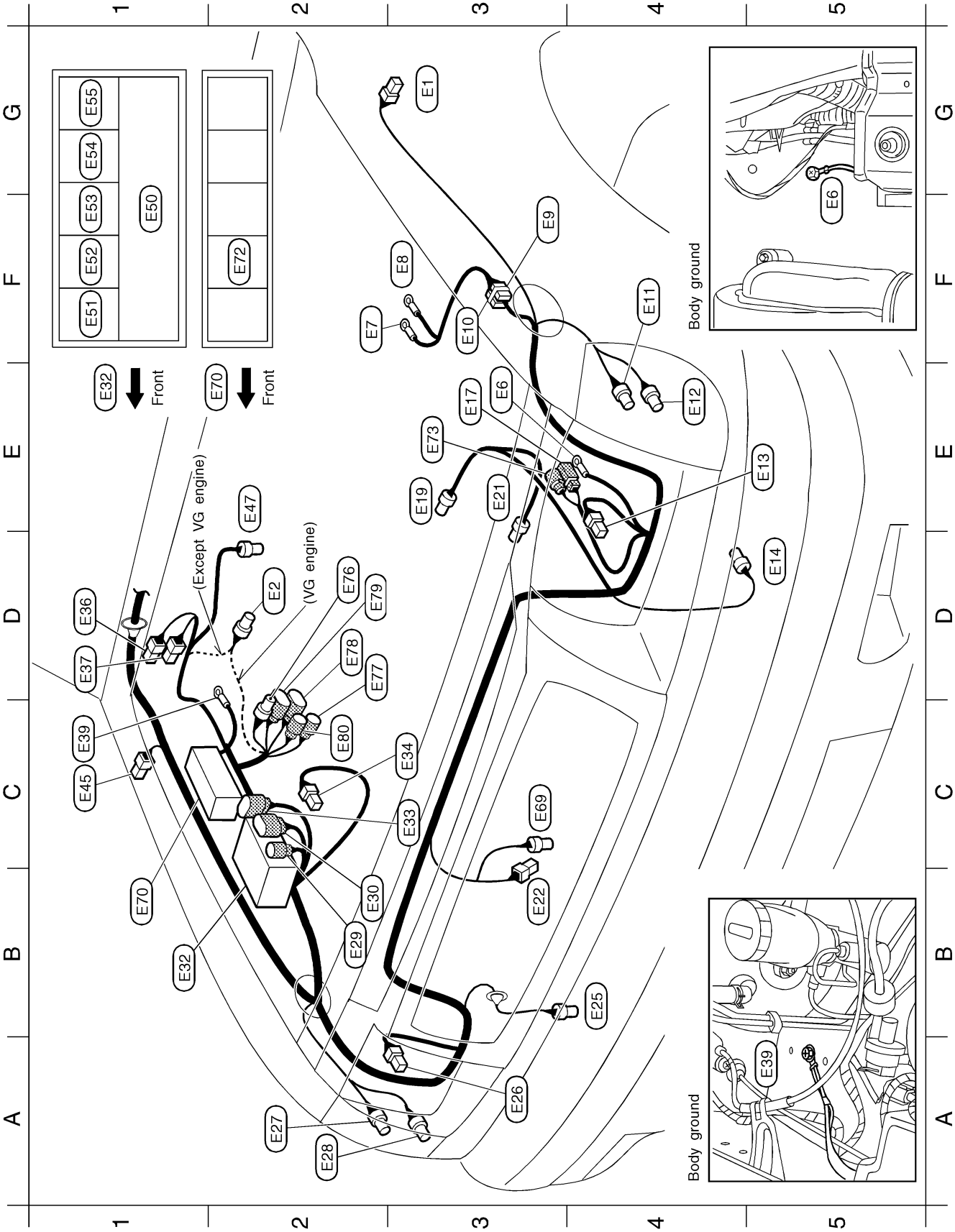

HEL309B

G3	E1	B/2	:	Side turn signal lamp LH (For Australia)
D2	E2	GY/2	:	Brake fluid level switch
E3	E6	—	:	Body ground
F2	E7	—	:	Ignition coil (Z engine)
F3	E8	—	:	Ignition coil (Z engine)
F3	E9	–/2	:	Resistor (Z engine)
F3	E10	W/2	:	Condenser (Z engine)
F4	E11	GY/3	:	Front combination lamp LH (Except for Australia)
E4	E12	BR/3	:	Front combinaiton lamp LH (For Australia)
E5	E13	B/3	:	Headlamp LH
D5	E14	GY/2	:	Washer motor
E3	E17	B/2	:	To A2 (VG engine)
E3	E19	GY/3	:	Distributor (Z engine)
E3	E21	B/1	:	Compressor (Z engine)
B3	E22	B/1	:	Horn low
B4	E25	B/4	:	Triple-pressure switch
A3	E26	B/3	:	Headlamp RH
A2	E27	GY/3	:	Front combination lamp RH (Except for Australia)
A2	E28	BR/3	:	Front combination lamp RH (For Australia)
B2	E29	GY/2	:	To E204 (Except VG engine)
				To E502 (VG engine)
B2	E30	GY/8	:	To E203 (Except VG engine)
B1	E32	—	:	Relay box-1 (Fusible link and fuse box)
C3	E33	SB/8	:	To E205 (KA engine)
C3	E34	B/1	:	Battery
D1	E36	B/1	:	ISC-FI pot control solenoid valve (Z engine)
D1	E37	B/1	:	ISC-FI pot control solenoid valve (Z engine)
C1	E39	—	:	Body ground
C1	E45	B/2	:	Side turn signal lamp RH (For Australia)
E2	E47	GY/3	:	Carburetor (Z engine)
F1	E50	—	:	Fusible link and fuse box
F1	E51	L/4	:	Air conditioner relay
F1	E52	W/3	:	Horn relay
F1	E53	BR/6	:	ECM relay (KA engine)
		L/4	:	ECM relay (VG engine)
G1	E54	B/5	:	Automatic choke relay (Z engine)
		L/4	:	Fuel pump relay (ECCS engine)
G1	E55	BR/6	:	Defogger relay (M/T models for Australia)
		BR/6	:	Park/Neutral position (PNP) relay (A/T models)
C3	E69	BR/2	:	Ambient temperature switch (KA engine)
B1	E70	—	:	Relay box-2 (A/T models)
F2	E72	BR/6	:	Defogger relay (A/T models)
E3	E73	GY/2	:	To A3 (VG engine)
D2	E76	GY/2	:	Dropping resistor (A/T models)
D2	E77	GY/2	:	Park/Neutral position (PNP) switch (A/T models)
D2	E78	GY/8	:	Park/Neutral position (PNP) switch (A/T models)
D2	E79	BR/8	:	To terminal cord assembly (A/T models)
C2	E80	GY/3	:	Revolution sensor (A/T models)

PASSENGER COMPARTMENT

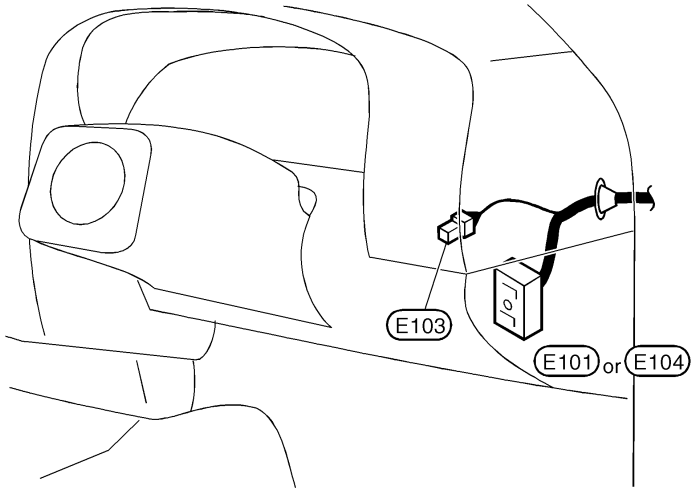

E101	SMJ	:	To M5 (M/T models)
E103	B/2	:	Fuse block
E104	SMJ	:	To M85 (A/T models)

Resistor E9

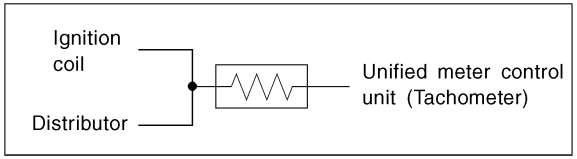

Engine Room Harness (Cont'd)

RHD MODELS — DIESEL ENGINE

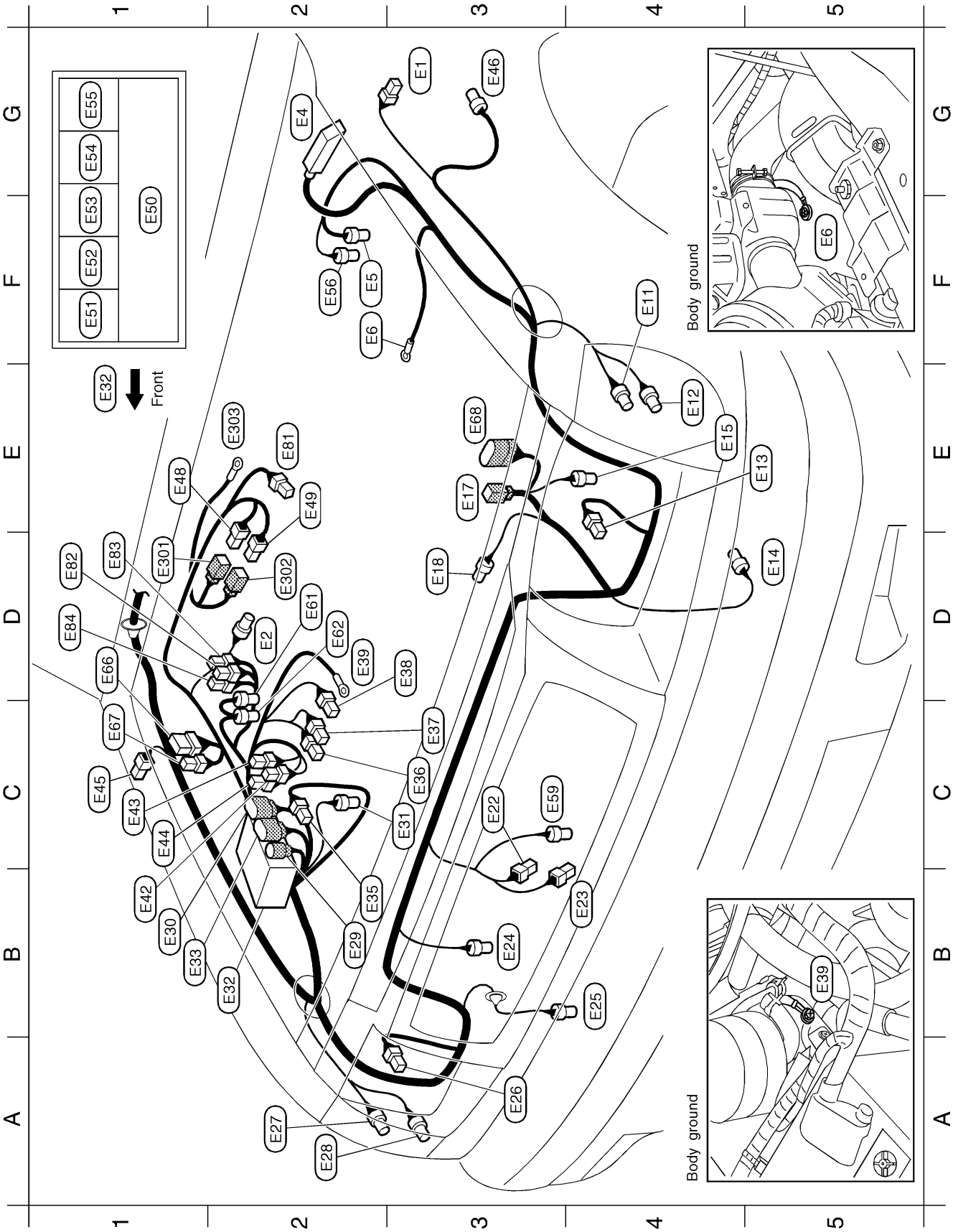

HEL800A

G3	E1	B/2	:	Side turn signal lamp LH (For Europe and Australia)
D2	E2	GY/2	:	Brake fluid level switch
G2	E4	B/31	:	ABS actuator and electric unit (For ABS)
F2	E5	BR/2	:	Fuel filter switch
F2	E6	—	:	Body ground
F4	E11	GY/3	:	Front combination lamp LH (Except for Europe and Australia)
E4	E12	BR/3	:	Front combination lamp LH (For Europe and Australia)
E5	E13	B/3	:	Headlamp LH
D5	E14	GY/2	:	Washer motor
E4	E15	BR/2	:	Front wheel sensor LH (For ABS)
E3	E17	B/2	:	To A2
D3	E18	GY/2	:	Thermoswitch (For Europe except 2WD models with ABS and QD engine)
C3	E22	B/1	:	Horn low
B4	E23	B/1	:	Horn high (For Europe and QD engine except for Australia)
B3	E24	GY/2	:	Cooling fan motor (For Europe except 2WD models with ABS and QD engine)
B4	E25	B/4	:	Triple-pressure switch
A3	E26	B/3	:	Headlamp RH
A2	E27	GY/3	:	Front combination lamp RH (Except for Europe and Australia)
A2	E28	BR/3	:	Front combination lamp RH (For Europe and Australia)
B2	E29	GY/2	:	To E204
B1	E30	GY/8	:	To E203 (With EGR)
C3	E31	GY/2	:	Front wheel sensor RH (For ABS)
B2	E32	—	:	Relay box-1 (Fusible link and fuse box)
B1	E33	SB/8	:	To E205
B2	E35	B/1	:	To E206
C3	E36	B/1	:	IACV-FICD solenoid valve
C3	E37	B/1	:	IACV-FICD solenoid valve
D3	E38	GY/1	:	Vacuum warning switch (Except for Australia)
D2	E39	—	:	Body ground
B1	E42	W/1	:	Glow relay-1
C1	E43	W/1	:	Glow relay-1
C1	E44	G/2	:	Glow relay-1
C1	E45	B/2	:	Side turn signal lamp RH (For Europe and Australia)
G3	E46	GY/3	:	Power antenna (For Europe except 2WD model with ABS)
E1	E48	B/1	:	To E301 (QD engine)
E2	E49	L/2	:	To E302 (TD engine)
F1	E50	—	:	Fusible link and fuse box
F1	E51	L/4	:	Air conditioner relay
F1	E52	W/3	:	Horn relay
F1	E53	L/4	:	Cooling fan relay (For Europe except 2WD models with ABS and QD engine)
G1	E54	L/4	:	Fuel heater relay (For Europe)
G1	E55	BR/6	:	Defogger relay (TD27 engine for Australia and TD25, 25Ti and QD engine)
F2	E56	GY/4	:	Fuel filter (For fuel heater)(For Europe)
C3	E59	B/2	:	Ambient sensor (For auto A/C)
D2	E61	B/2	:	EGRC-solenoid valve (Throttle chamber)(With EGR)
D2	E62	BR/2	:	EGRC-solenoid valve (EGR valve)(With EGR)
D1	E66	GY/6	:	Dim-dip lamp unit (For Europe)
C1	E67	GY/4	:	Dim-dip lamp unit (For Europe)
E3	E68	GY/10	:	To A13
E2	E81	B/2	:	Dropping resistor (TD engine for Australia)
D1	E82	W/1	:	Glow relay-2 (TD engine for Australia)
D1	E83	W/1	:	Glow relay-2 (TD engine for Australia)
D1	E84	G/2	:	Glow relay-2 (TD engine for Australia)

PASSENGER COMPARTMENT

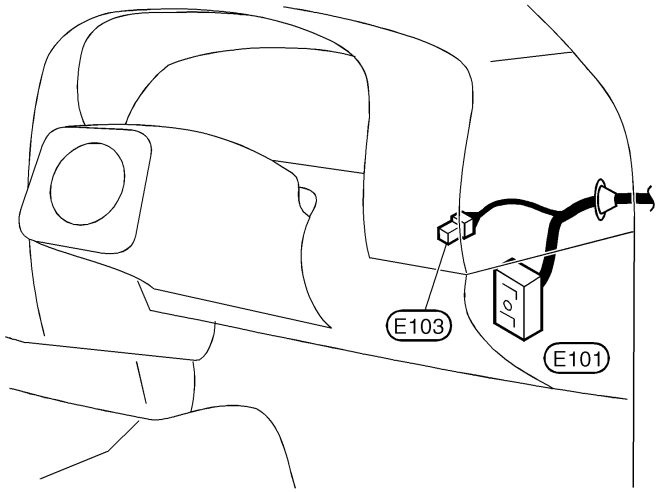

E101	SMJ		:	To M5
E103	B/2		:	Fuse block

Sub-harness

D1	E301	B/1	:	To E48 (QD engine)
D2	E302	L/2	:	To E49 (TD engine)
E2	E303	—	:	Glow plug

Engine Control Harness

VG ENGINE

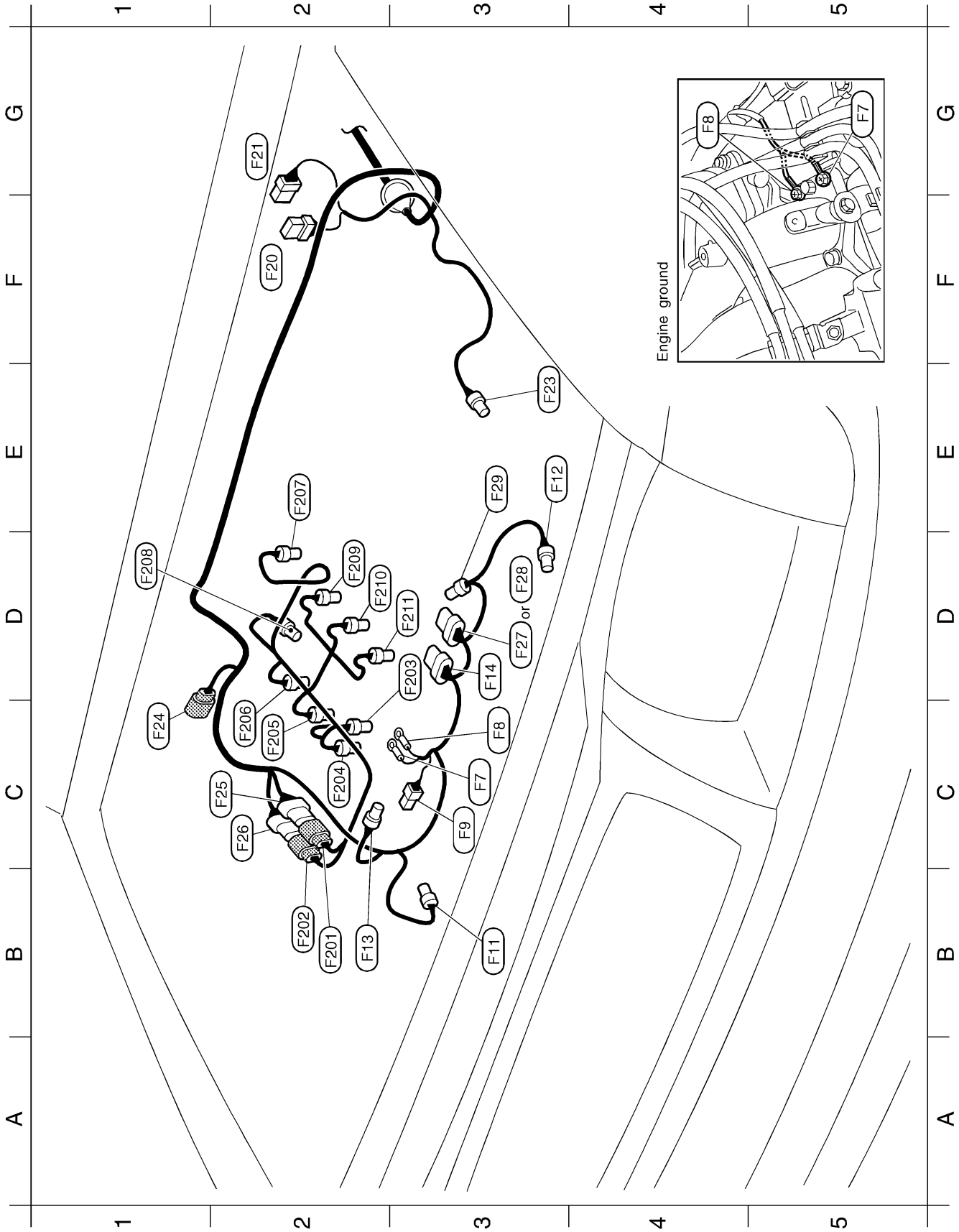

HEL311B

C3	F7	—	:	Engine ground
C3	F8	—	:	Engine ground
C3	F9	B/1	:	Thermal transmitter
B3	F11	B/2	:	Power steering oil pressure switch
E3	F12	B/1	:	Compressor
B2	F13	GY/2	:	Distributor
D3	F14	GY/6	:	Distributor
F2	F20	GY/8	:	Wiper amplifier (A/T models)
G2	F21	W/6	:	Wiper motor
E3	F23	B/4	:	Mass air flow sensor
C1	F24	GY/8	:	To E228
C2	F25	GY/8	:	To F201
C2	F26	B/8	:	To F202
D3	F27	BR/3	:	Throttle position sensor (M/T models)
D3	F28	GY/3	:	Throttle position sensor (A/T models)
E3	F29	B/3	:	Throttle position switch (A/T models)
B2	F201	GY/8	:	To F25
B2	F202	B/8	:	To F26
D3	F203	GY/2	:	Engine coolant temperature sensor
C2	F204	B/2	:	Injector No.1
C2	F205	B/2	:	Injector No.3
C2	F206	B/2	:	Injector No.5
E2	F207	LG/2	:	IACV-AAC valve
D1	F208	SB/2	:	IACV-Air regulator
D2	F209	B/2	:	Injector No.6
D2	F210	B/2	:	Injector No.4
D3	F211	B/2	:	Injector No.2

PASSENGER COMPARTMENT

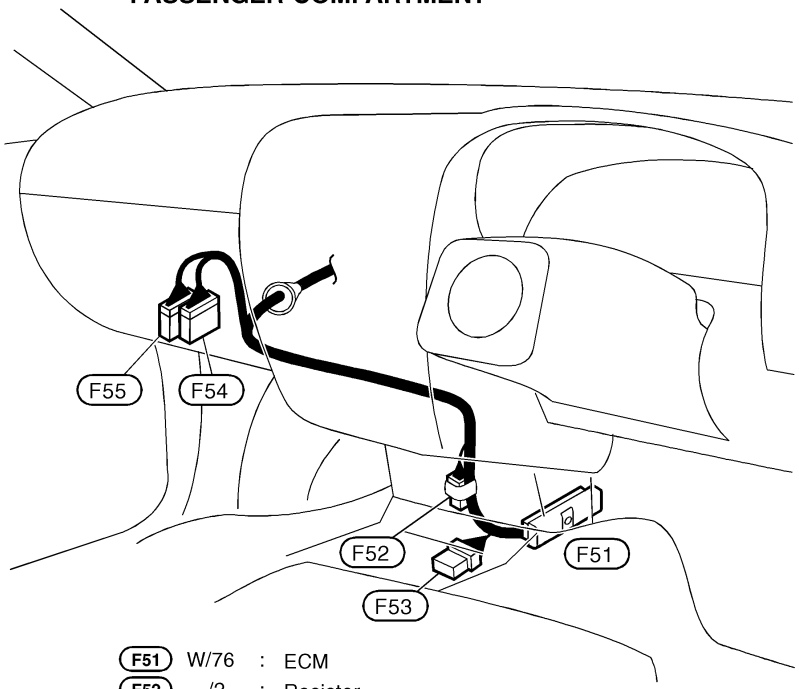

F51	W/76	:	ECM
F52	–/2	:	Resistor
F53	GY/6	:	Joint connector
F54	W/24	:	To M48
F55	W/16	:	To M47

Resistor F52

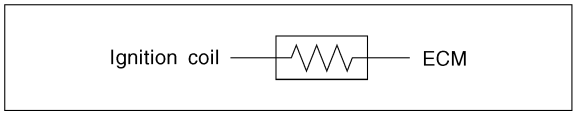

Engine Harness

Z ENGINE

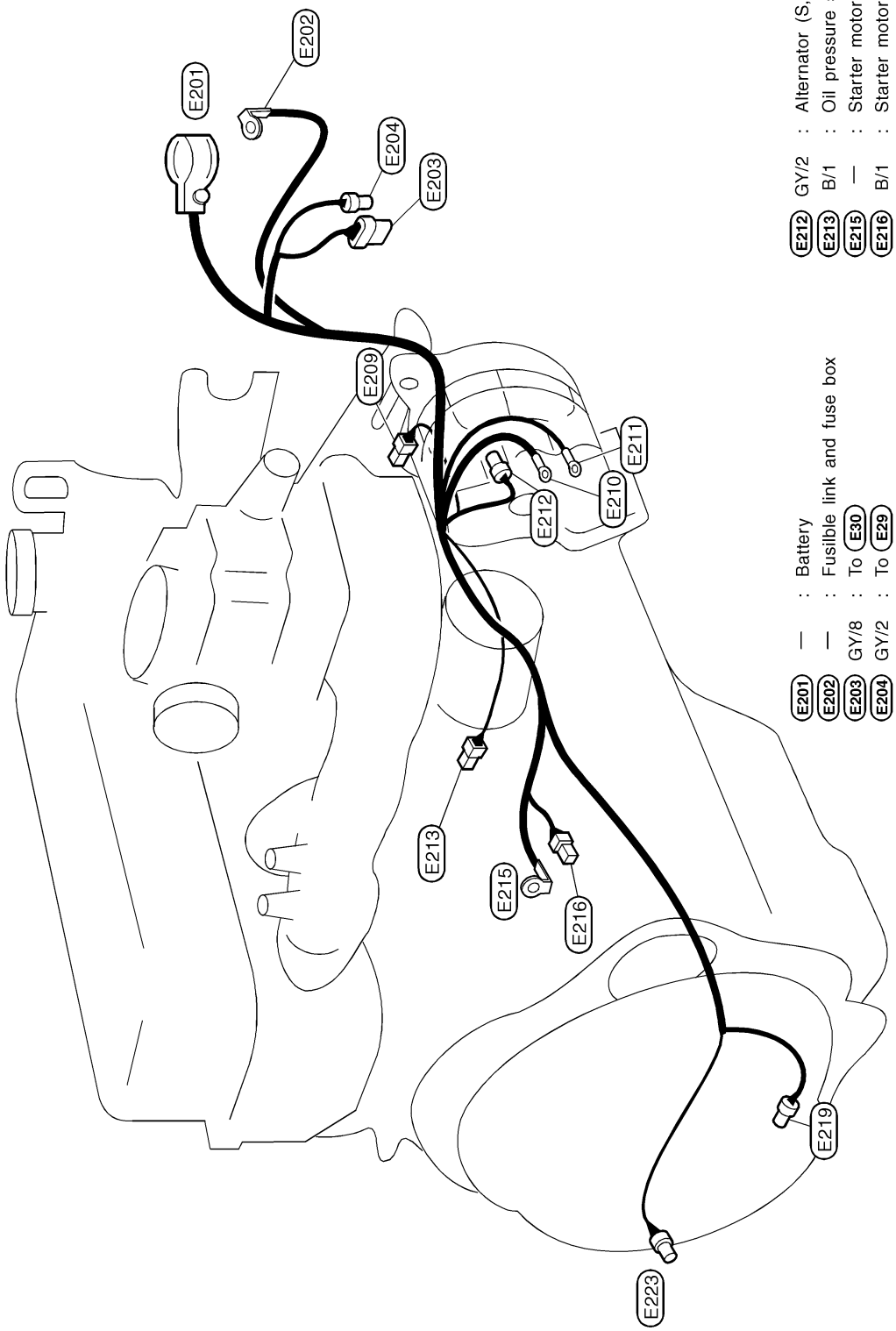

E201	—	: Battery
E202	—	: Fusilble link and fuse box
E203	GY/8	: To E30
E204	GY/2	: To E29
E209	B/1	: Thermal transmitter
E210	—	: Alternator (B)
E211	—	: Alternator (E)
E212	GY/2	: Alternator (S,L)
E213	B/1	: Oil pressure switch
E215	—	: Starter motor
E216	B/1	: Starter motor
E219	GY/2	: Back-up lamp switch
E223	GY/2	: Vehicle speed sensor

HEL566B

Engine Harness (Cont'd)

KA ENGINE

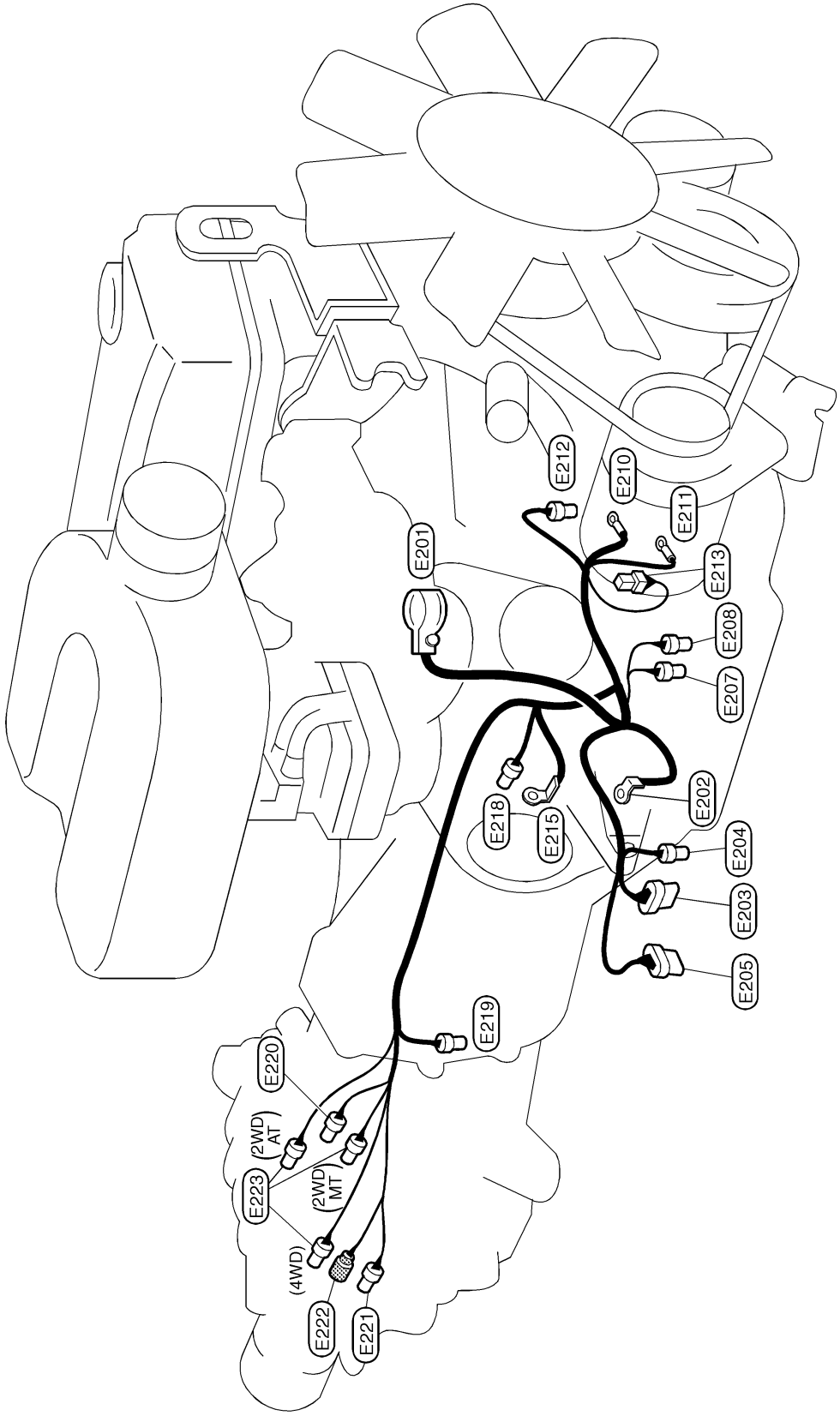

E201	—	:	Battery
E202	—	:	Fusible link and fuse box
E203	GY/8	:	To E30
E204	GY/2	:	To E29
E205	SB/8	:	To E33
E207	GY/2	:	Power steering oil pressure switch (RHD 4WD models)
E208	B/2	:	Power steering oil pressure switch (Except RHD 4WD models)
E210	—	:	Alternator (B)
E211	—	:	Alternator (E)
E212	GY/2	:	Alternator (S,L)

E213	B/1	:	Oil pressure switch (KA24E)
E215	—	:	Starter motor
E218	GY/1	:	Starter motor
E219	GY/2	:	Back-up lamp switch (M/T models)
E220	B/2	:	Park/Neutral position (PNP) switch (M/T models)
E221	GY/1	:	Transfer switch (4WD models)
E222	GY/1	:	Transfer switch (4WD models)
E223	GY/2	:	Vehicle speed sensor

HEL314B

Engine Harness (Cont'd)

VG ENGINE

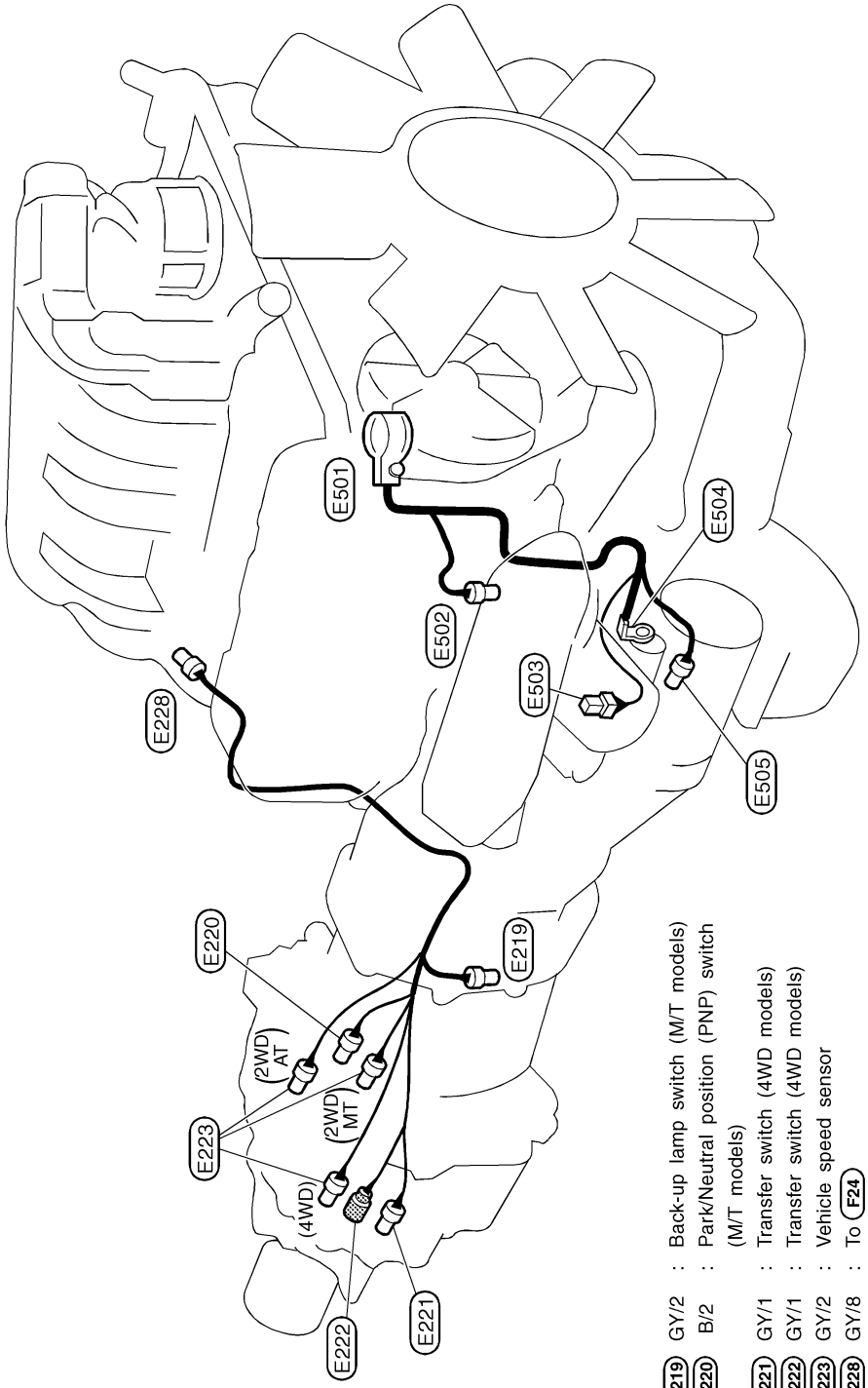

E219	GY/2	:	Back-up lamp switch (M/T models)
E220	B/2	:	Park/Neutral position (PNP) switch (M/T models)
E221	GY/1	:	Transfer switch (4WD models)
E222	GY/1	:	Transfer switch (4WD models)
E223	GY/2	:	Vehicle speed sensor
E228	GY/8	:	To F24

Startor motor sub-harness

E501	—	:	Battery
E502	GY/2	:	To E29
E503	B/1	:	Oil pressure switch
E504	—	:	Starter motor
E505	GY/1	:	Starter motor

HEL315B

Engine Harness (Cont'd)

DIESEL ENGINE

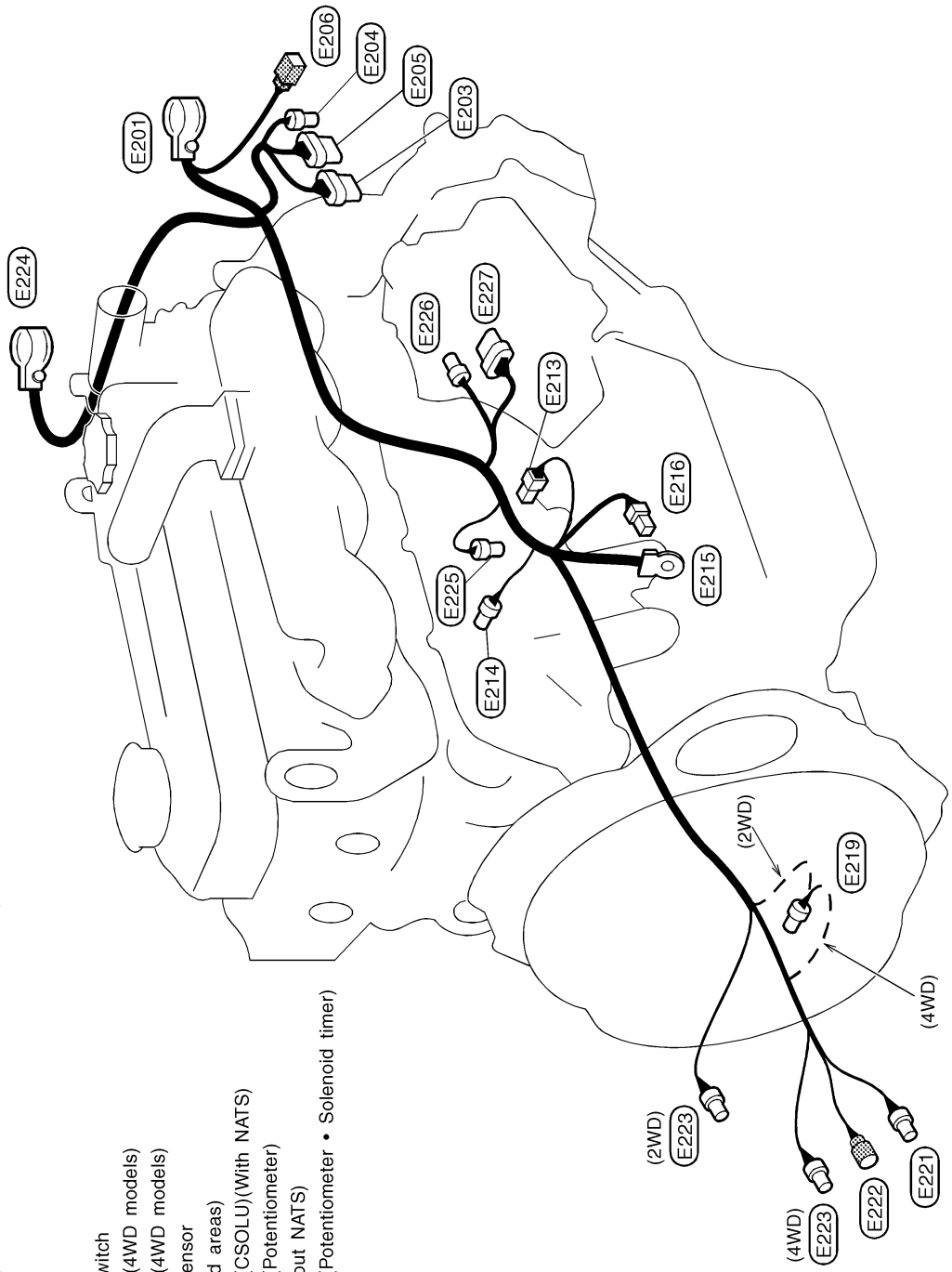

E201	—	:	Battery
E203	GY/8	:	To E30 (With EGR)
E204	GY/2	:	To E29
E205	SB/8	:	To E33
E206	B/1	:	To E35
E213	B/1	:	Oil pressure switch (For warning lamp)
E214	GY/2	:	Injection pump (Fuel cut solenoid valve • Solenoid timer) (Without NATS)
E215	—	:	Starter motor
E216	B/1	:	Starter motor
E219	GY/2	:	Back-up lamp switch
E221	GY/1	:	Transfer switch (4WD models)
E222	GY/1	:	Transfer switch (4WD models)
E223	GY/2	:	Vehicle speed sensor
E224	—	:	Battery (For cold areas)
E225	B/3	:	Injection pump (CSOLU)(With NATS)
E226	GY/3	:	Injection pump (Potentiometer) (With EGR without NATS)
E227	GY/6	:	Injection pump (Potentiometer • Solenoid timer) (With NATS)

HEL567B

Alternator Harness

VG ENGINE

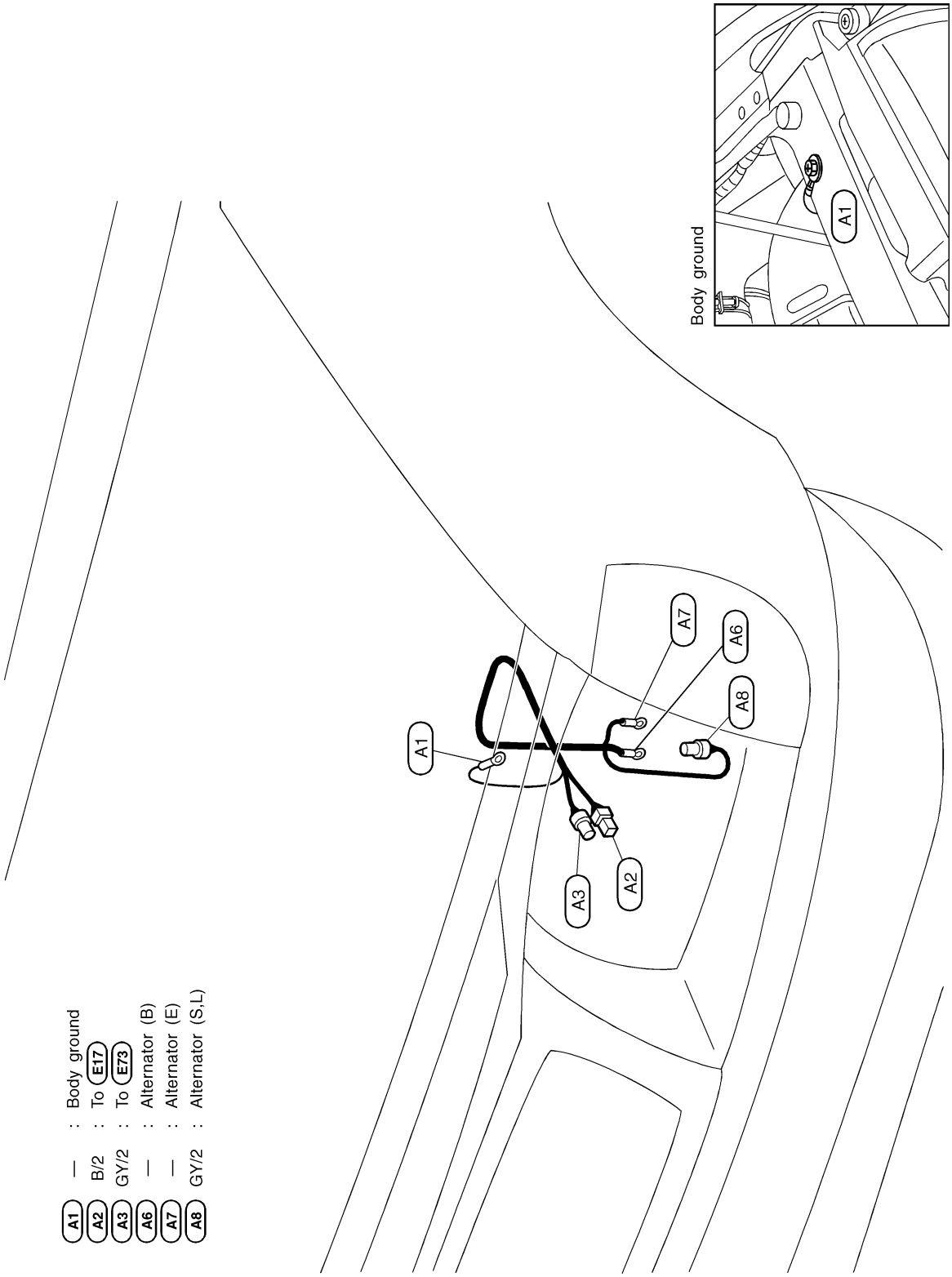

HEL317B

Instrument Harness

RHD MODELS

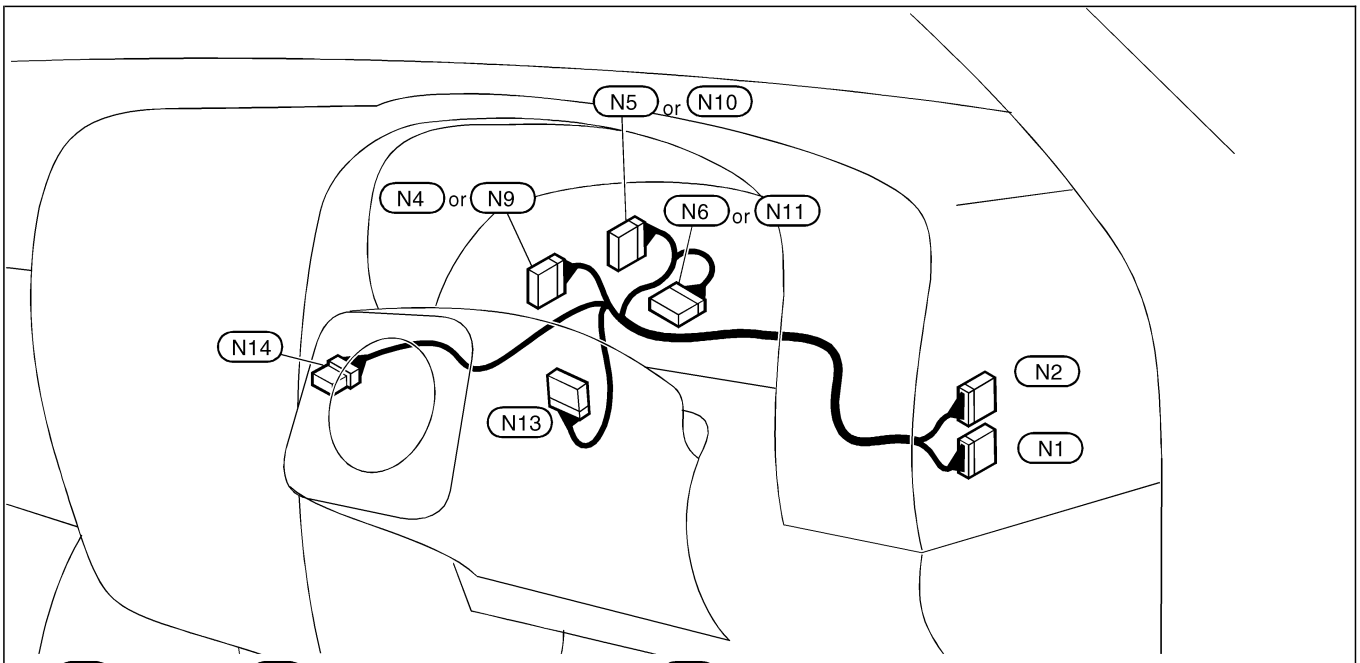

N1	W/24	: To M6	
N2	BR/24	: To M7	
N4	W/16	: Combination meter (With tachometer)	
N5	W/10	: Combination meter (A/T models with tachometer)	
N6	BR/16	: Combination meter (With tachometer)	
N9	W/20	: Combination meter (Without tachometer)	
N10	BR/20	: Combination meter (Without tachometer)	
N11	W/24	: Combination meter (Without tachometer)	
N13	W/12	: NATS IMMU (Diesel engine for Europe)	
N14	GY/6	: A/T mode switch (A/T models with VG engine)	

HEL308B

Chassis Harness and Tail Harness

Tail harness

T1	W/6	Rear combination lamp RH (A-chassis models and except for Europe, Australia and China)
T2	W/8	Rear combination lamp RH (For Europe, Australia and China except A-chassis models)
T3	GY/2	License plate lamp RH (With step bumper)
T4	SB/8	To C7
T5	GY/2	License plate lamp RH (Without step bumper)
T6	GY/2	License plate lamp LH (Without step bumper)
T7	B/2	License plate lamp LH (With step bumper)
T8	W/6	Rear combination lamp LH (A-chassis models and except for Europe, Australia and China)
T9	W/8	Rear combination lamp LH (For Europe, Australia and China except A-chassis models)
T10	GY/2	Rear fog lamp (RHD A-chassis models for Europe)
T11	B/2	To C8 (For Europe)
T12	GY/2	Rear fog lamp (LHD A-chassis models for Europe)

Chassis harness

C2	W/6	To M112 (With ABS)
C3	GY/5	Fuel level sensor unit and fuel pump
C5	GY/4	To rear wheel sensor sub-harness (For ABS)(4WD models)
C6	GY/2	Rear wheel sensor (For ABS)(2WD models)
C7	SB/8	To T4
C8	B/2	To T11 (For Europe)
C9	W/16	To M121
C10	BR/2	High-mounted stop lamp (With guard bar for the Middle East)

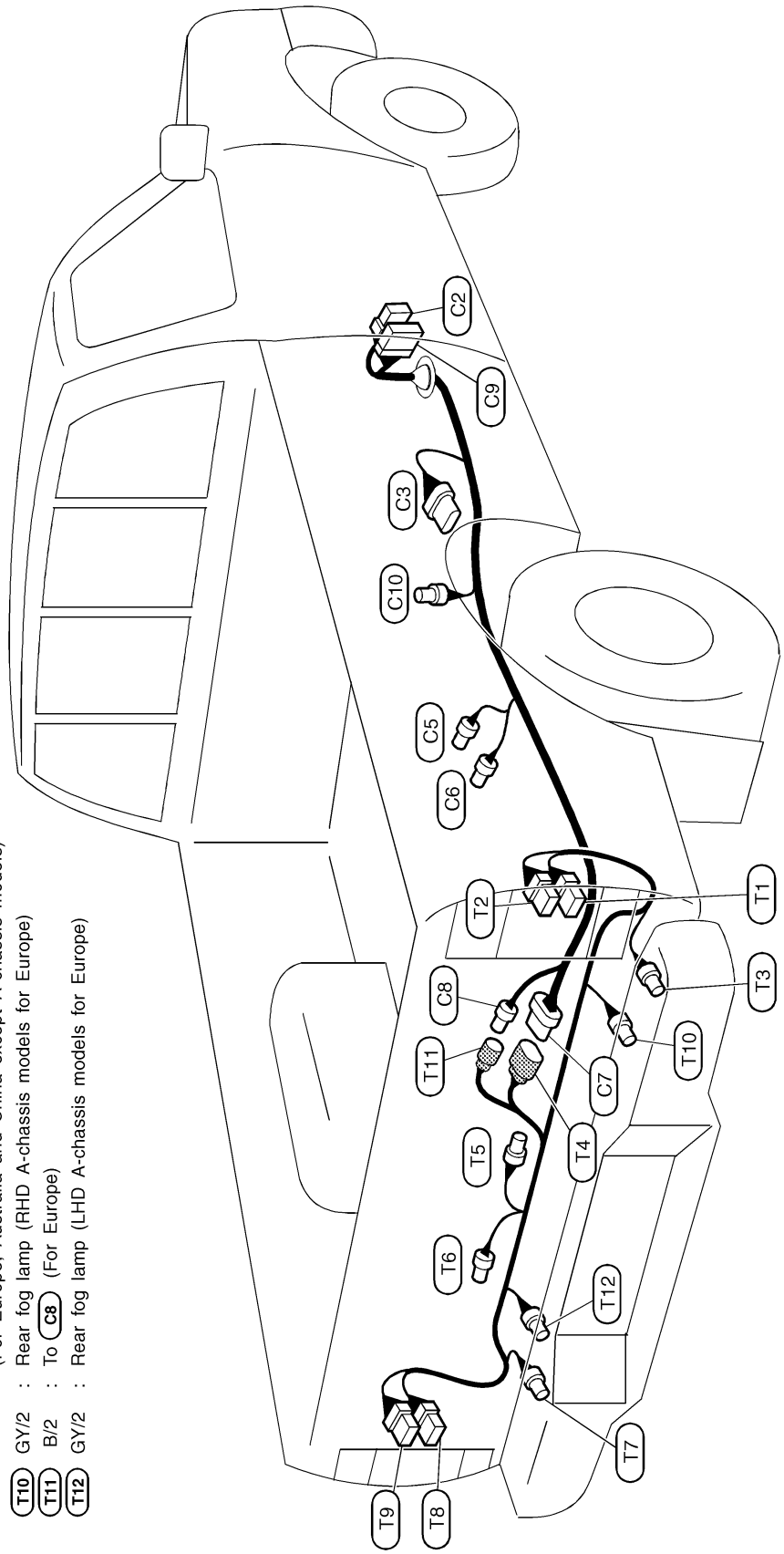

HEL568B

Front Door Harness (LH side)

LHD MODELS

- D1 W/20 : To M3
- D2 W/12 : To M4 (With power window)
- D3 BR/2 : Front speaker
- D4 GY/5 : Door mirror actuator (With power door mirror except for the Middle East)
- D5 W/16 : Power window main switch
- D7 B/2 : Power window regulator (With power window without interruption detection function)
- D8 GY/2 : Lock knob switch (With power door lock without multi-remote control system)
- D9 BR/3 : Door mirror defogger (With power window for Europe)
- D10 GY/4 : Door lock actuator (With multi-remote control system)
- D11 GY/3 : Door mirror actuator (With power door mirror for the Middle East)
- D12 GY/6 : Power window regulator (With power window with interruption detection function)
- D13 W/3 : Power window main switch (With power window with interruption detection function)
- D14 GY/12 : Door mirror remote control switch

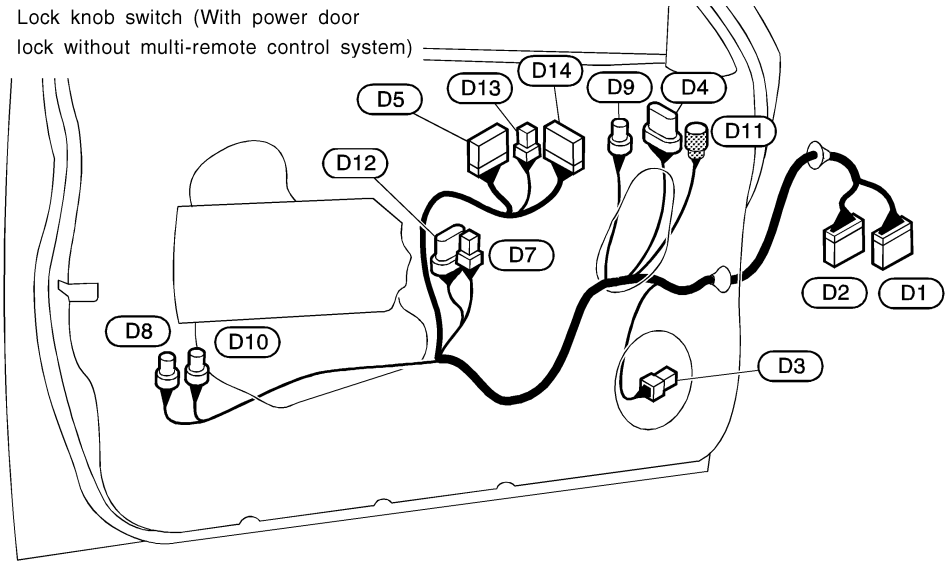

HEL569B

Headlamp

	Wattage (W)
High/low (Semi-sealed beam)	60/55 (H4)

Exterior Lamp

		Wattage (W)
Front combination lamp	Front turn signal	21
	Parking	5
Side turn signal lamp		5
Rear combination lamp	Turn signal	21
	Stop/Tail	21/5
	Back-up	21
	Fog (Except A-chassis)	21
Rear fog lamp (A-chassis)		21
License plate lamp	Standard bumper	5
	Step bumper	21
High-mounted stop lamp		13

Interior Lamp

	Wattage (W)
Interior room lamp	10
Spot lamp	8

Use the chart below to find out what each wiring diagram code stands for.
Refer to the wiring diagram code in the alphabetical index to find the location (page number) of each wiring diagram.

Code	Section	Wiring Diagram Name
AAC/V	EC	IACV-AAC Valve
A/C, M	HA	Manual Air Conditioner
AIRREG	EC	IACV-AIR Regulator
AT/IND	EL	A/T Indicator
AUDIO	EL	Audio
BACK/L	EL	Back-up Lamp
BA/FTS	AT	BATT/A/T Fluid Temperature Sensor and TCM Power Supply
CHARGE	EL	Charging System
CMPS	EC	Camshaft Position Sensor
DEF	EL	Rear Window Defogger and Mirror Defogger
ECTS	EC	Engine Coolant Temperature Sensor
EGRC/V	EC	EGRC — Solenoid Valve
ENGSS	AT	Engine Speed Signal
F/PUMP	EC	Fuel Pump
HORN	EL	Horn
IGN/SG	EC	Ignition Signal
ILL	EL	Illumination
INJECT	EC	Injector
LOAD	EC	Electric Load Signal
LPSV	AT	Line Pressure Solenoid Valve
MAFS	EC	Mass Air Flow Sensor
MAIN	EC, AT	Main Power Supply and Ground Circuit
METER	EL	Speedometer, Tachometer, Temp. and Fuel Gauges

Code	Section	Wiring Diagram Name
MIL/DL	EC	MIL and Data Link Connectors
MIRROR	EL	Power Door Mirror
NONDTC	AT	Non-detectable Items
OVRCSV	AT	Overrun Clutch Solenoid Valve
P/ANT	EL	Power Antenna
PLA	EC	Partial Load Advance Control
PNP/SW	EC	Park/Neutral Position Switch
POWER	EL	Power Supply Routing
PST/SW	EC	Power Steering Oil Pressure Switch
SHIFT	AT	Shift Lock System
SSV/A	AT	Shift Solenoid Valve A
SSV/B	AT	Shift Solenoid Valve B
SRS	RS	Supplemental Restraint System
S/SIG	EC	Start Signal
START	EL	Starting System
STOP/L	EL	Stop Lamp
TCV	AT	Torque Converter Clutch Solenoid Valve
TPS	EC, AT	Throttle Position Sensor
VSS	EC	Vehicle Speed Sensor
VSSAT	AT	Vehicle Speed Sensor A/T (Revolution Sensor)
VSSMTR	AT	Vehicle Speed Sensor Meter
WARN	EL	Warning Lamps