Go to First Edition

CLUTCH

SECTION CL

MODIFICATION NOTICE:
KA24DE engine model information has been added.

CONTENTS

CLUTCH SYSTEM.....2
Clutch Pedal 3
INSPECTION AND ADJUSTMENT.....4
Adjusting Clutch Pedal 4
HYDRAULIC CLUTCH CONTROL 5
Operating Cylinder.....5
SERVICE DATA AND SPECIFICATIONS (SDS) 6
General Specifications.....6
Inspection and Adjustment 6

Spring pin
Reservoir cap
Lock nut
7.8 - 10.8
(0.80 - 1.10, 69.4 - 95.5)
Reservoir
Snap pin
Clutch pedal
Seal
Cylinder body
Rubbing surface
to piston assembly
Clutch damper
(not seviceable)
Clevis pin
(LHD model)
8 - 11
(0.8 - 1.1, 69 - 95)
Reservoir cap
Reservoir
Spring pin
Seal
Cylinder body
Rubbing surface
to piston assembly
(RHD model)
Bleeder screw
6 - 10
(0.6 - 1.0, 52 - 87)
8 - 11
(0.8 - 1.1, 69 - 95)
Clutch disc
Clutch cover
Withdrawal lever
Release bearing
Dust cover
Contact surface to
transmission case
and withdrawal lever
(4WD model)
Dust cover clip
(4WD model)
2WD models with gasoline
engines
17 - 20
(1.7 - 2.0, 12 - 14)
Lock plate
Clutch hose
30 - 40
(3.1 - 4.1, 22 - 30)
Clutch operating
cylinder
Air bleeder
5.9 - 9.8 (0.60 - 1.0, 52.1 - 86.8)

2WD models with diesel engines

17 - 20
(1.7 - 2.0, 12 - 14)
Gasket
Air bleeder
5.9 - 9.8
(0.60 - 1.0, 52.1 - 86.8)

4WD models

Eye bolt
17 - 20 (1.7 - 2.0, 12 - 14)
Gasket
Clutch hose
Air bleeder
5.9 - 9.8
(0.60 - 1.0, 52.1 - 86.8)

: N•m (kg-m, ft-lb)
: N•m (kg-m, in-lb)
: Apply recommended sealant, Nissan genuine part: KP115-00100, Three Bond TB1212 or equivalent.
: Apply lithium-based grease including molybdenum disulphide.
: Apply rubber lubricant.

SCL795-B

Clutch Pedal

LHD model

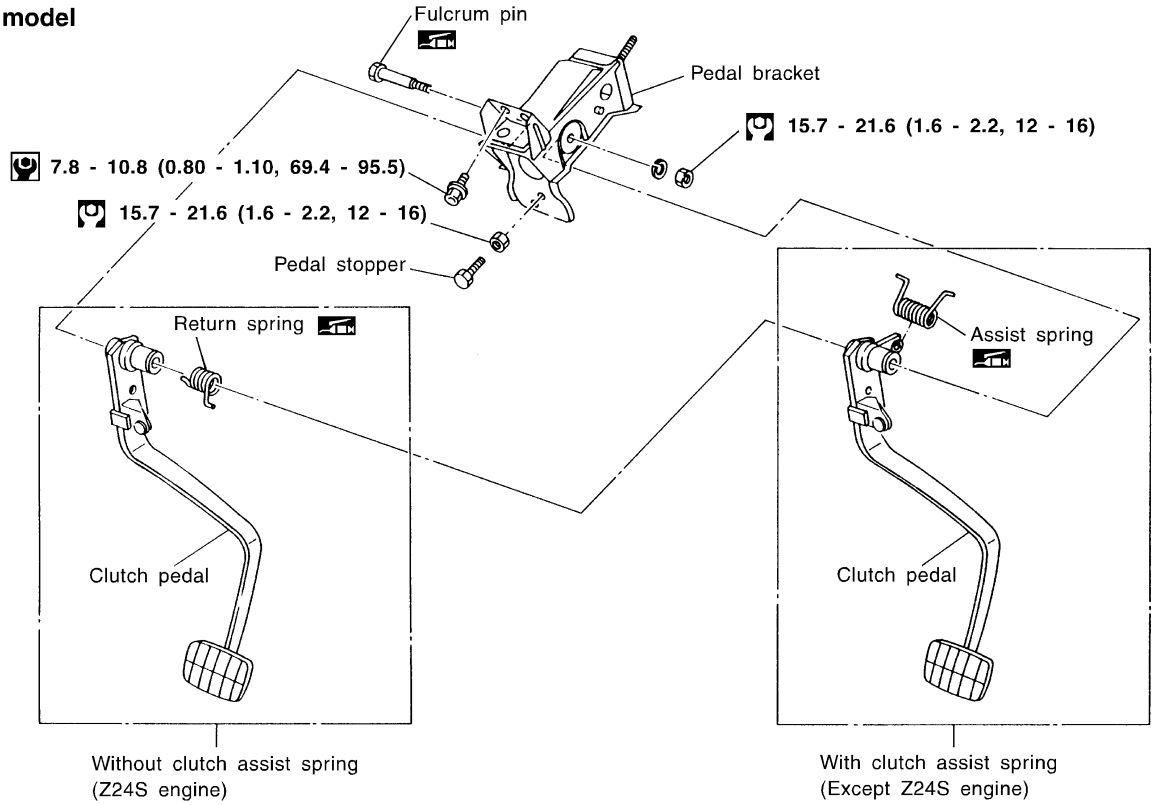

RHD model

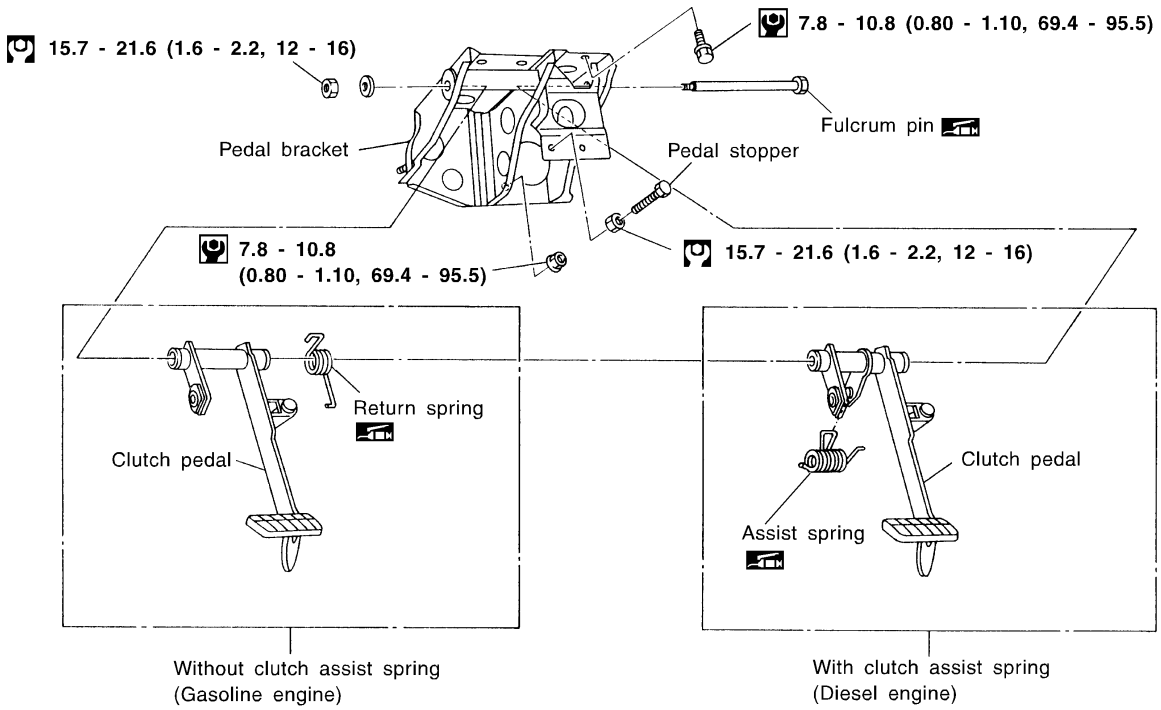

: N•m (kg-m, in-lb)

: N•m (kg-m, ft-lb)

SCL741-C

Adjusting Clutch Pedal

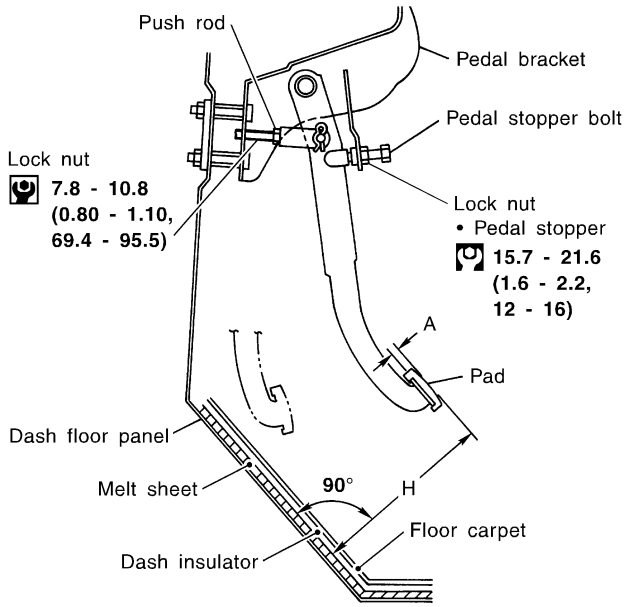

Pedal height "H"
(Measured from surface of melt sheet to pedal pad):
LHD model
Except TD25T and QD32 engines
221 - 231 mm (8.70 - 9.09 in)
TD25T and QD32 engines
240 - 250 mm (9.45 - 9.84 in)
RHD model
Except TD25T and QD32 engines
195 - 205 mm (7.68 - 8.07 in)
TD25T and QD32 engines
203 - 213 mm (7.99 - 8.39 in)
Pedal free play "A":
1 - 1.5 mm (0.039 - 0.059 in)

: N•m (kg-m, in-lb)

: N•m (kg-m, ft-lb)

SCL742-C

Operating Cylinder

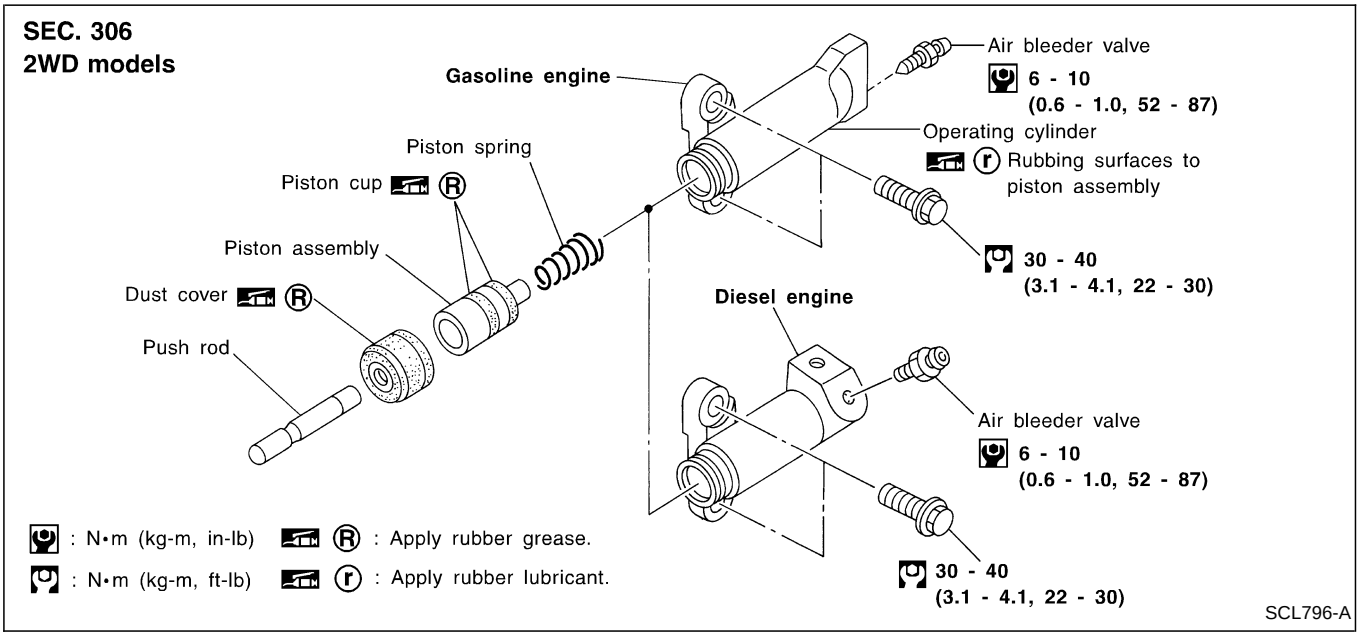

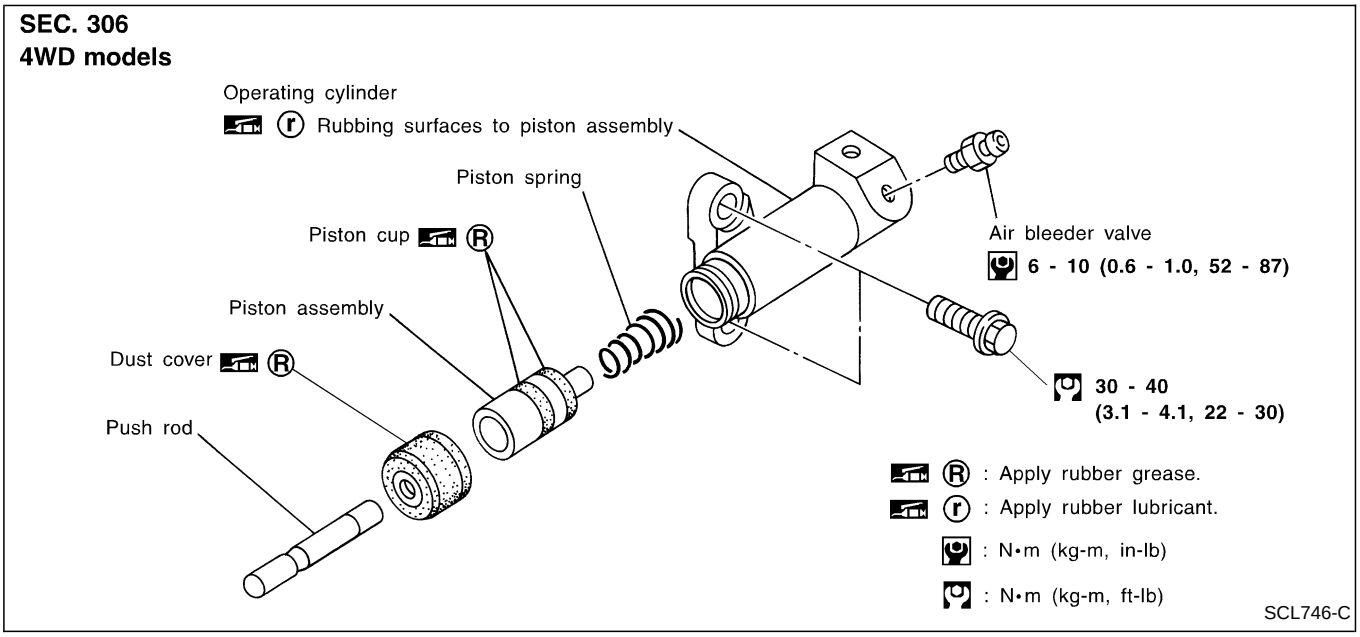

General Specifications

CLUTCH DISC

Destination	Australia, Middle East and General areas
Model	240
Engine	KA24DE, Z24S
Facing size mm (in) (Outer dia. x inner dia. x thickness)	240 x 150 x 3.5 (9.45 x 5.91 x 0.138)
Thickness of disc assembly With load mm (in)	7.75 - 8.25 (0.3051 - 0.3248) With 4,904 N (500 kg, 1,103 lb)

Destination	Europe
Model	240
Engine	KA24E
Facing size mm (in) (Outer dia. x inner dia. x thickness)	240 x 150 x 3.5 (9.45 x 5.91 x 0.138)
Thickness of disc assembly With load mm (in)	7.6 - 8.0 (0.299 - 0.315) With 4,904 N (500 kg, 1,103 lb)

CLUTCH COVER

Model	240	250
Engine	KA24DE	TD25T
Full load N (kg, lb)	4,413 (450, 992)	5,884 (600, 1,323)

Inspection and Adjustment

CLUTCH PEDAL

Unit: mm (in)

Pedal height “H*”	
LHD model	
KA24DE engine model	221 - 231 (8.70 - 9.09)
RHD model	
KA24DE engine model	195 - 205 (7.68 - 8.07)

*: Measured from surface of melt sheet to pedal pad

CLUTCH DISC

Unit: mm (in)

Model	240
Engine model	KA24DE
Wear limit of facing surface to rivet head	0.3 (0.012) or more
Runout limit of facing	1.0 (0.039)
Distance of runout check point (from the hub center)	115 (4.53)
Maximum backlash of spline (at outer edge of disc)	1.0 (0.039)

CLUTCH COVER

Unit: mm (in)

Model	240	250
Engine model	KA24DE	TD25T
Diaphragm spring height	37.5 - 39.5 (1.476 - 1.555)	36.5 - 38.5 (1.437 - 1.516)
Uneven limit of diaphragm spring toe height	0.5 (0.020)	0.5 (0.020)