BRAKE SYSTEM

SECTION BR

MODIFICATION NOTICE:

- Wiring Diagrams have been changed.
- Service data and specifications (SDS) has been changed.

CONTENTS

TROUBLE DIAGNOSES 2
Component Parts and Harness Connector Location 2
Schematic/2WD Models 3
Wiring Diagram - ABS -/2WD LHD Models.....4
Wiring Diagram - ABS -/2WD RHD Models 7
Schematic/4WD Models 10
Wiring Diagram - ABS -/4WD LHD Models.....11
Wiring Diagram - ABS -/4WD RHD Models 15
TROUBLE DIAGNOSES FOR SELF-DIAGNOSTIC ITEMS.....19
Diagnostic Procedure 1 (Wheel sensor or rotor) 19
Diagnostic Procedure 2 (ABS actuator solenoid valve and solenoid valve relay).....21
Diagnostic Procedure 3 (Motor relay or motor).....23
Diagnostic Procedure 4 (Low voltage) 25
Diagnostic Procedure 5 (G sensor).....26
Diagnostic Procedure 6 (Control unit).....27
TROUBLE DIAGNOSES FOR SYMPTOMS.....28
Diagnostic Procedure 12 (Warning lamp does not come on when ignition switch is turned ON.) 28
Diagnostic Procedure 13 (Warning lamp stays on when ignition switch is turned ON.).....30
SERVICE DATA AND SPECIFICATIONS (SDS) 31
General Specifications.....31

Component Parts and Harness Connector Location

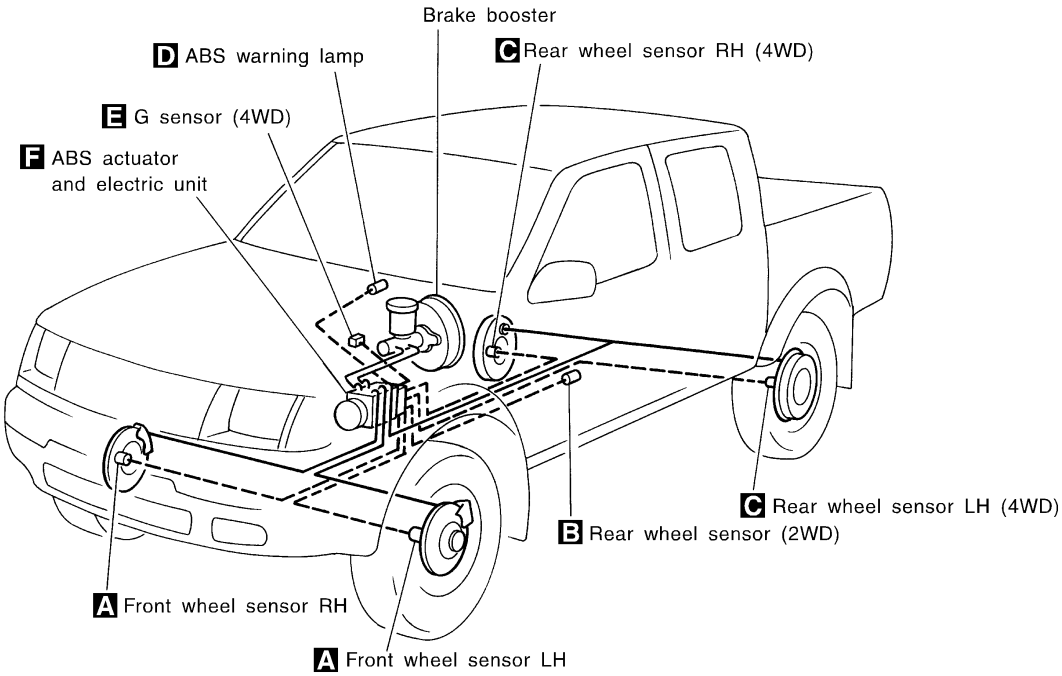

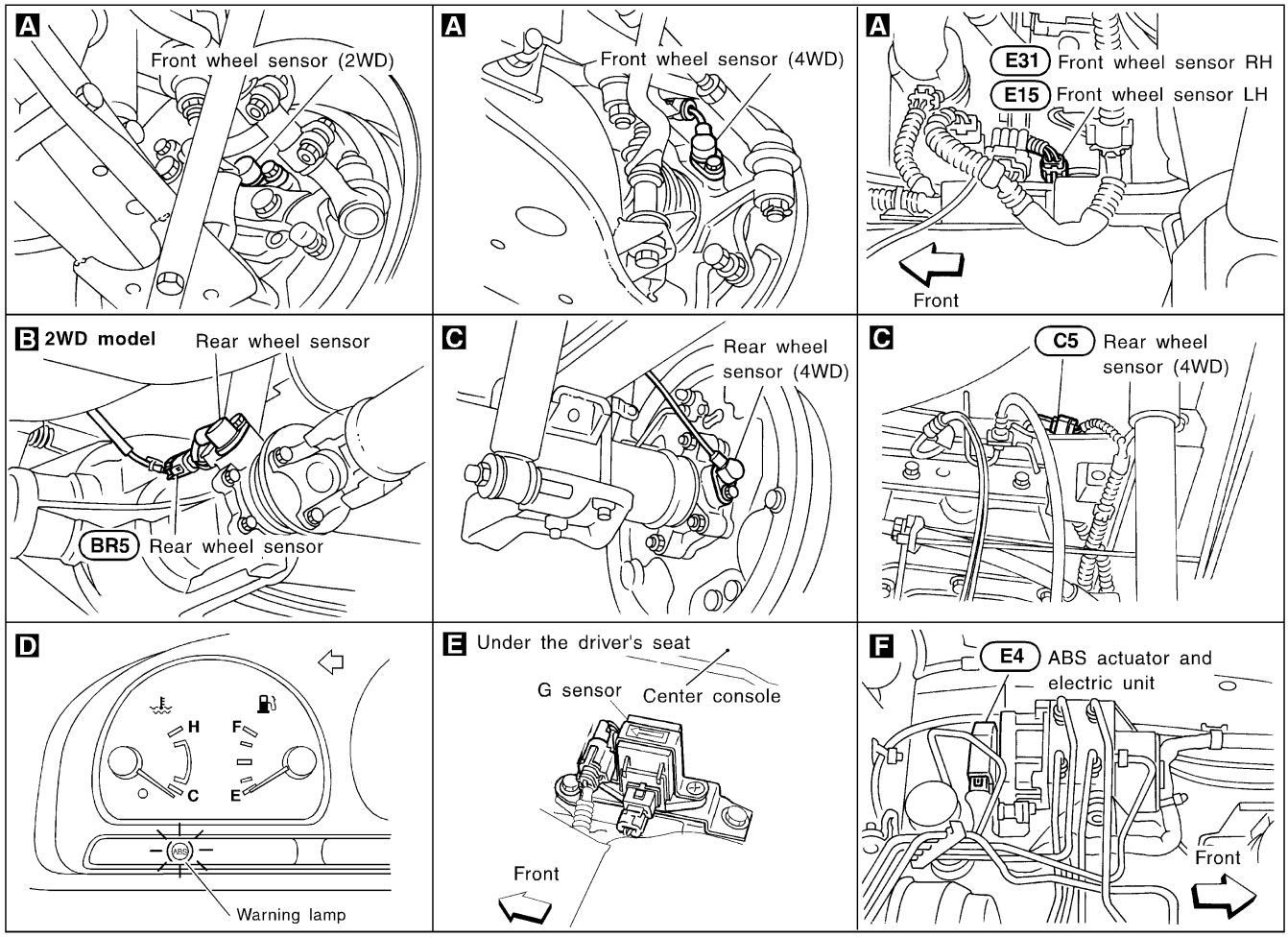

SBR076EA

Schematic/2WD Models

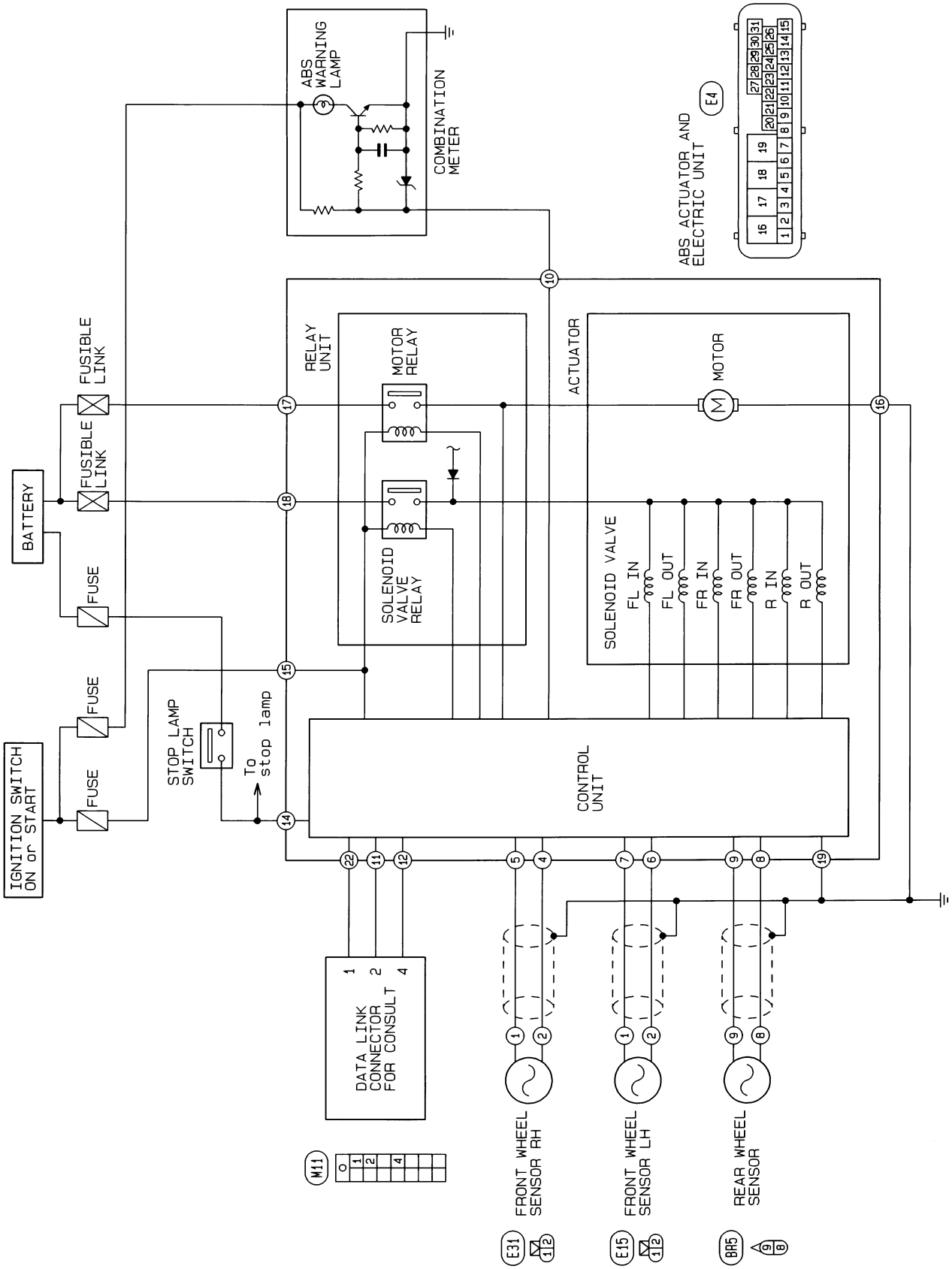

HBR097

Wiring Diagram — ABS —/2WD LHD Models

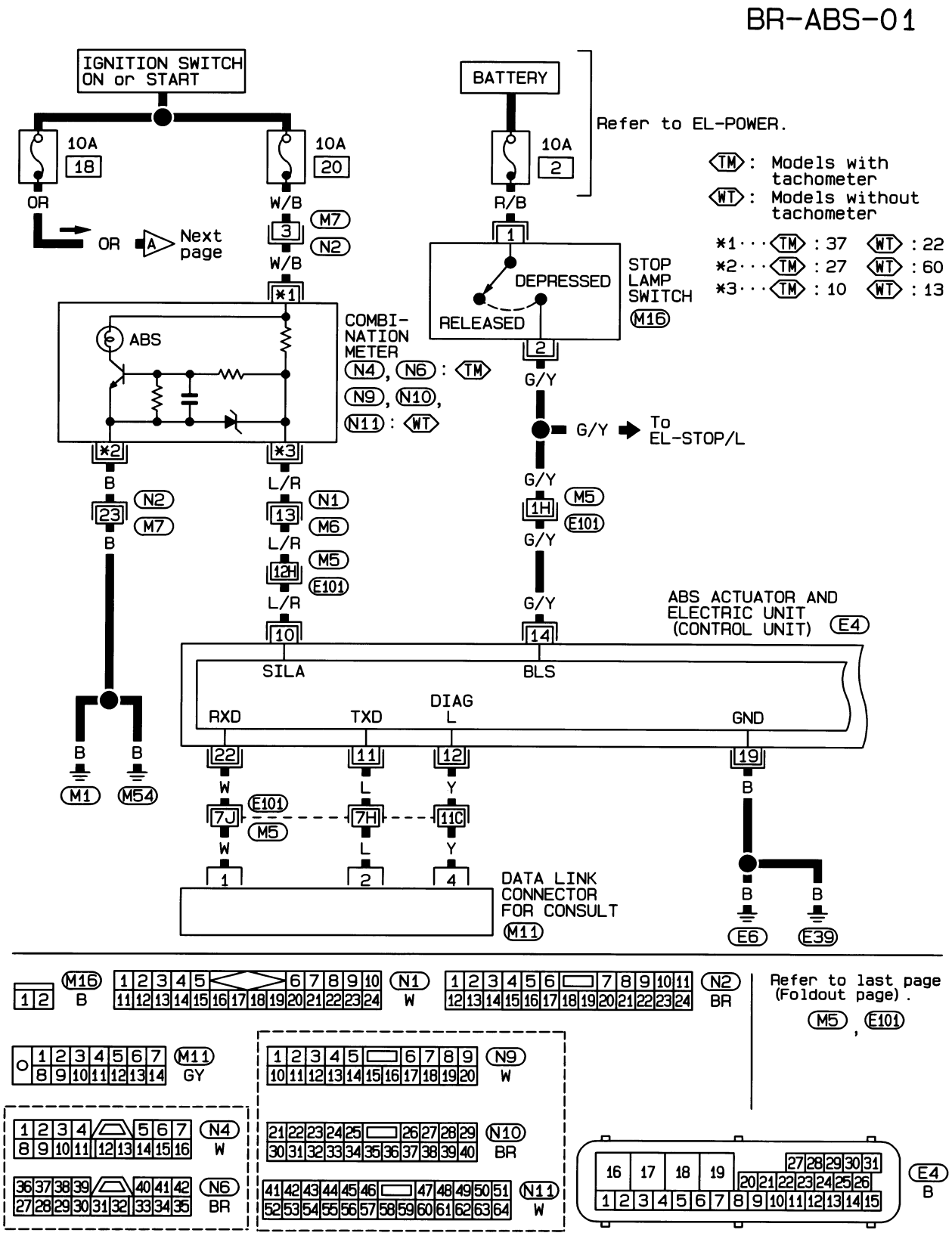

HBR087

Wiring Diagram — ABS —/2WD LHD Models (Cont'd)

BR-ABS-02

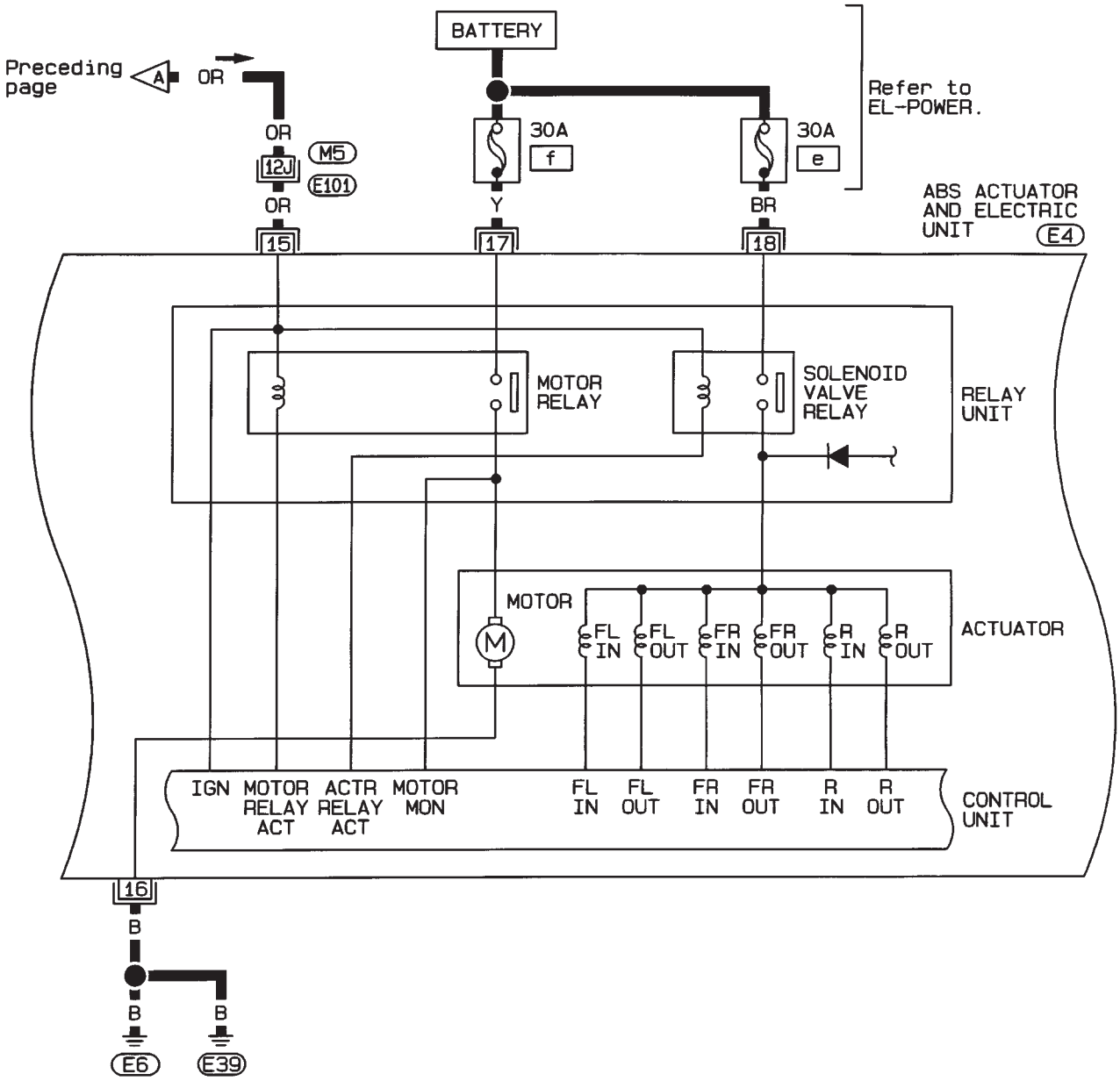

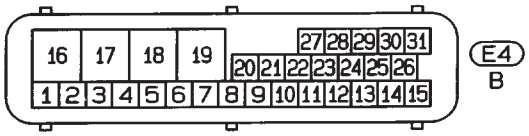

Refer to last page (Foldout page).

M5, E101

HBR069

Wiring Diagram — ABS —/2WD LHD Models (Cont'd)

BR-ABS-03

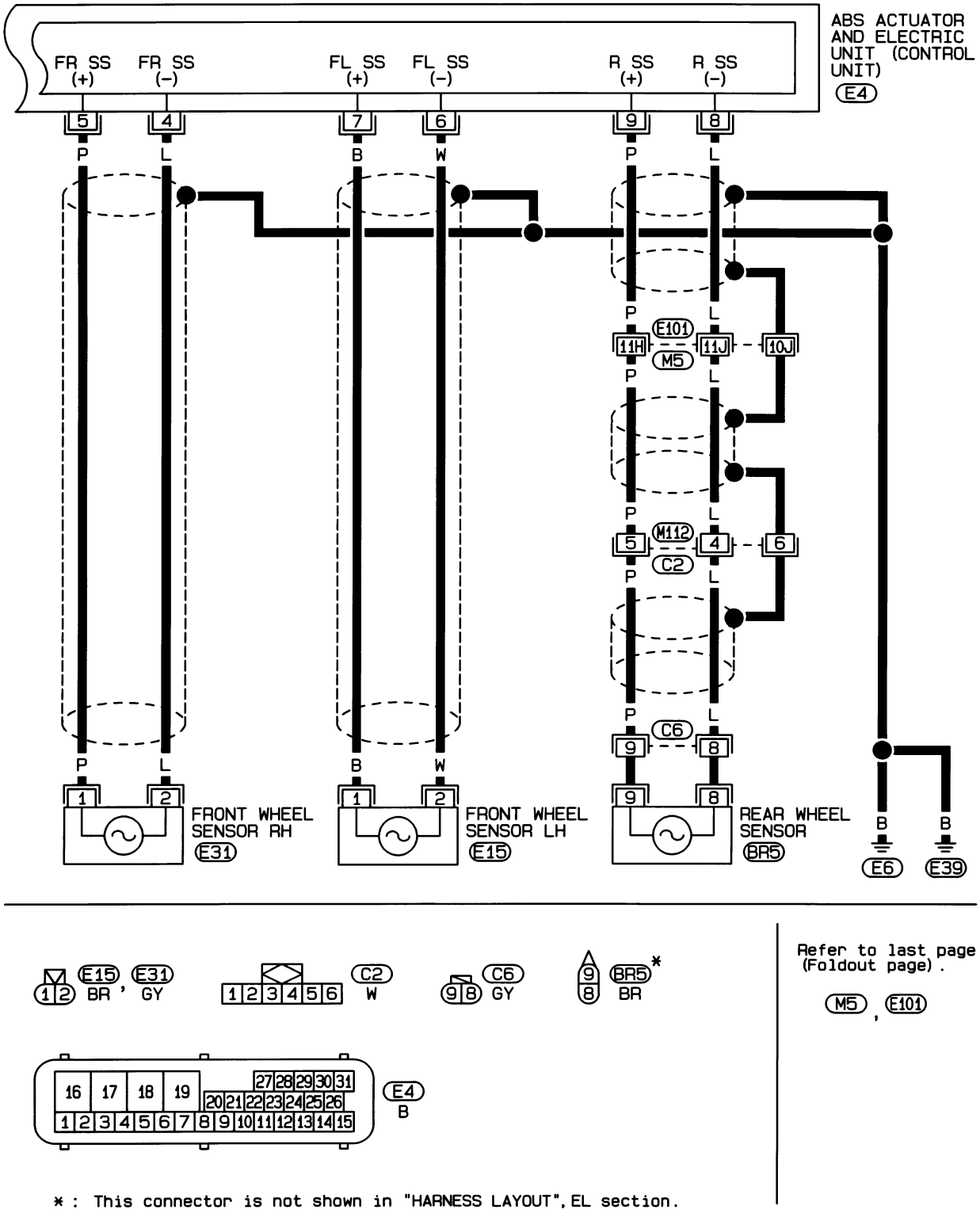

HBR098

Wiring Diagram — ABS —/2WD RHD Models

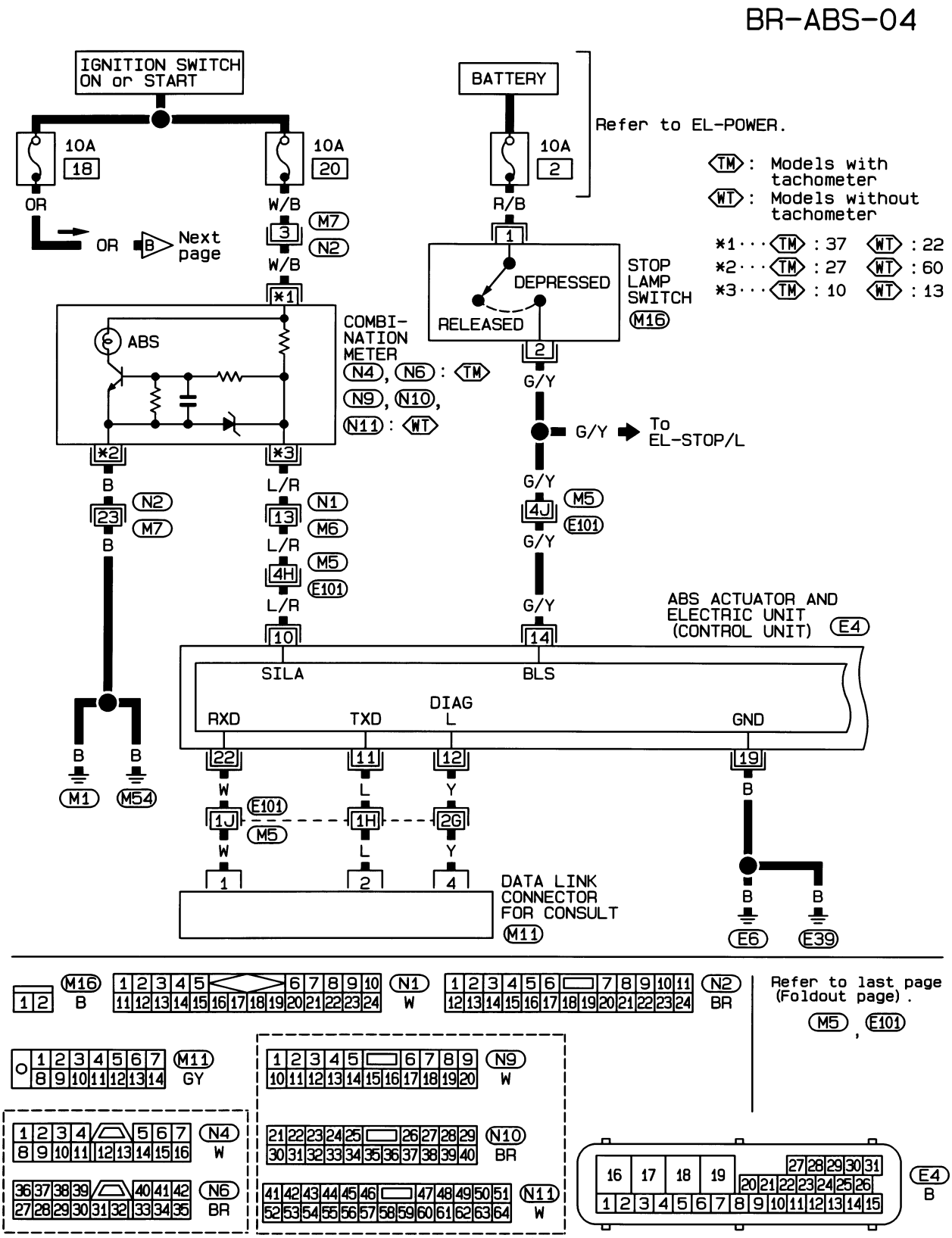

HBR088

Wiring Diagram — ABS —/2WD RHD Models (Cont'd)

BR-ABS-05

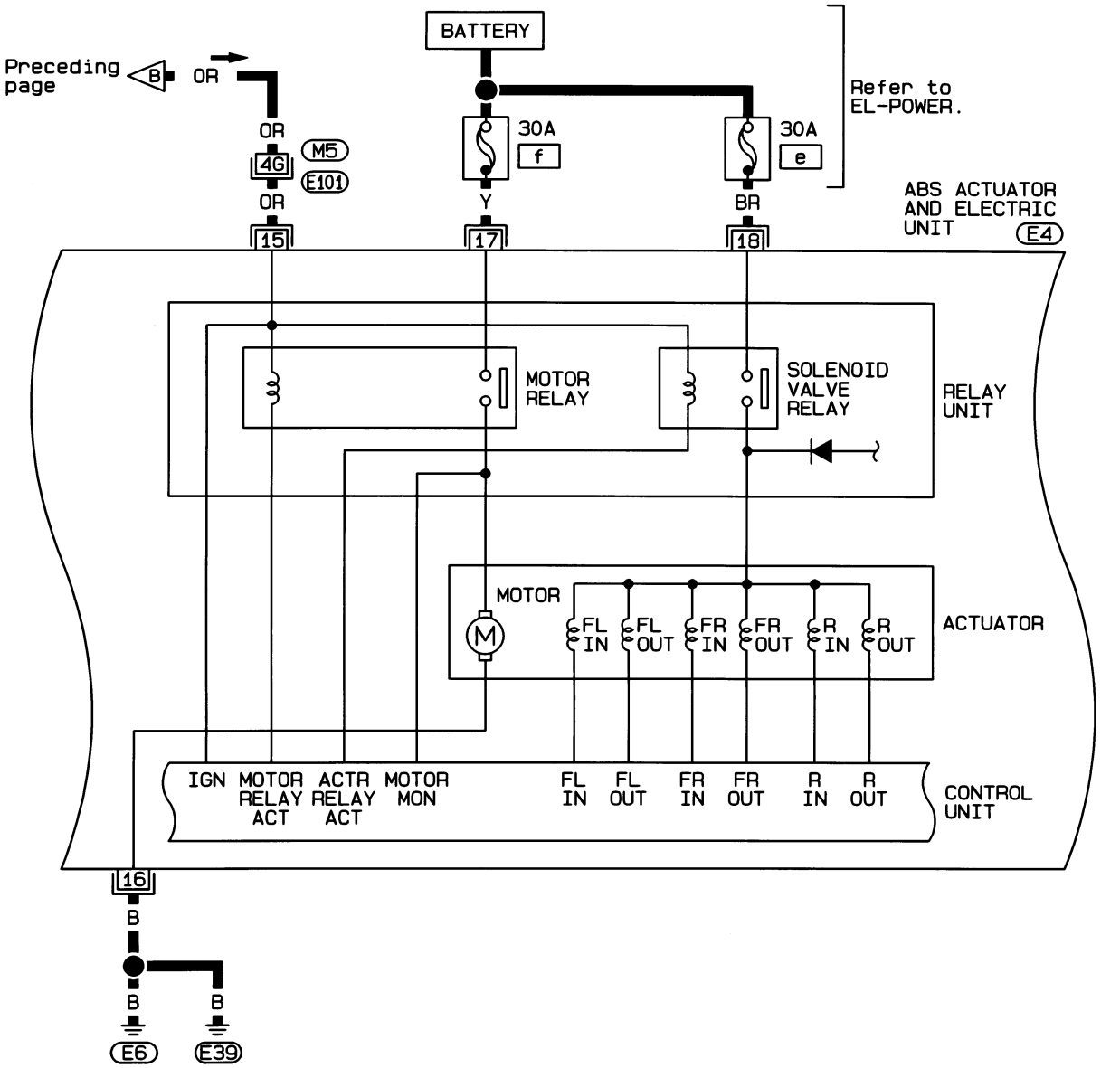

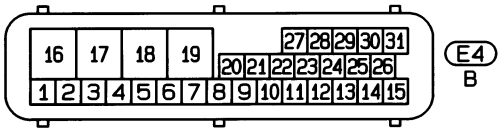

Refer to last page (Foldout page).

M5, E101

HBR089

Wiring Diagram — ABS —/2WD RHD Models (Cont'd)

BR-ABS-06

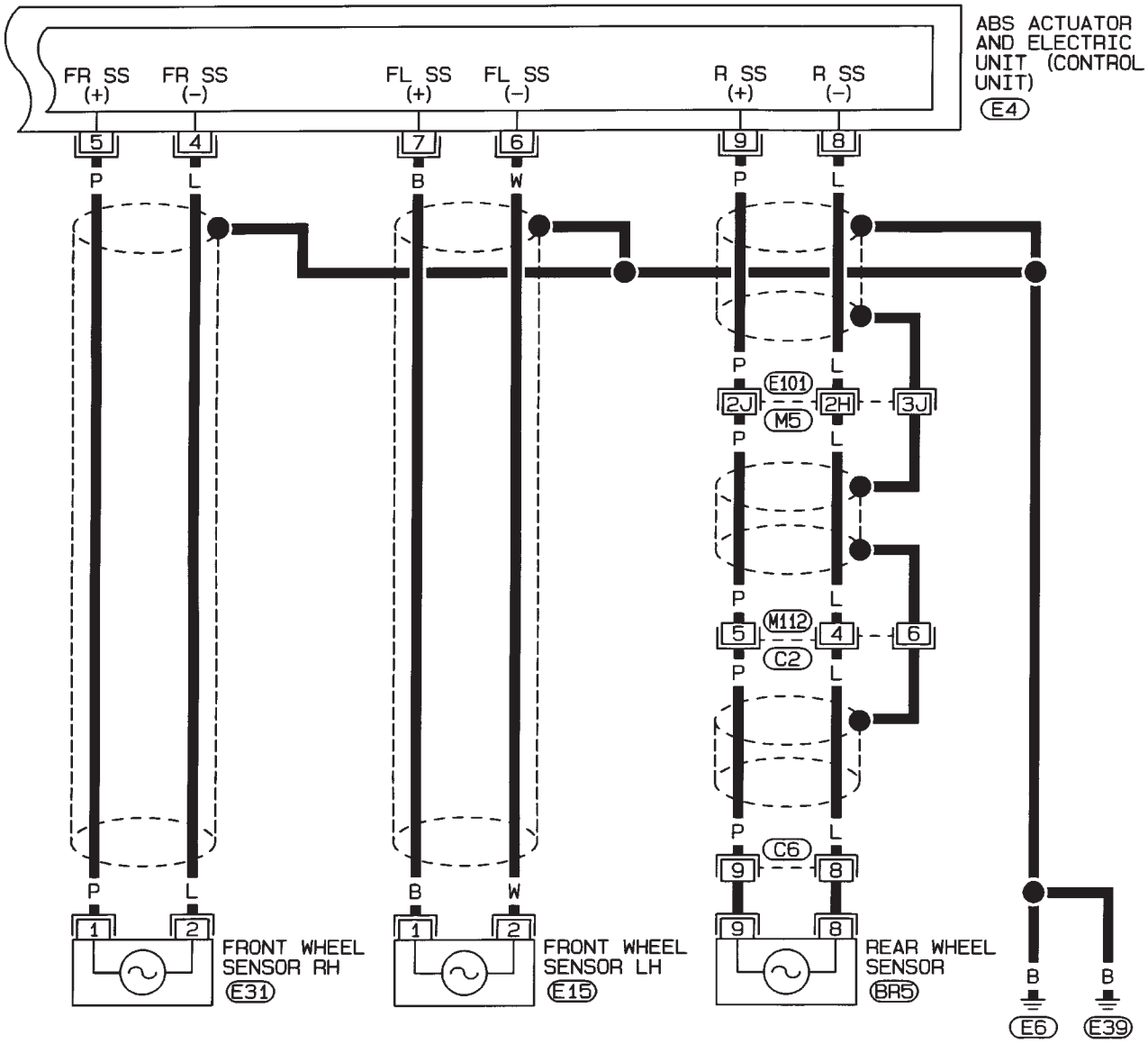

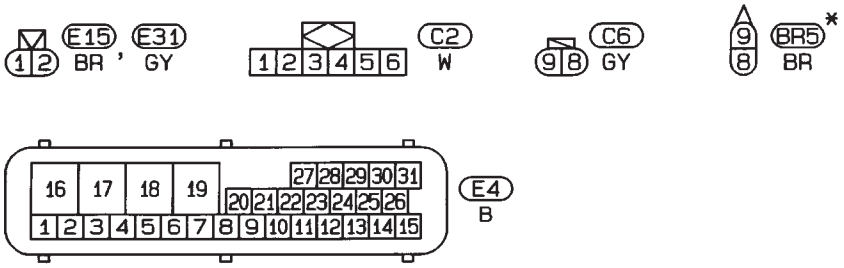

Refer to last page (Foldout page).

M5, E101

* : This connector is not shown in "HARNESS LAYOUT", EL section.

HBR073

Schematic/4WD Models

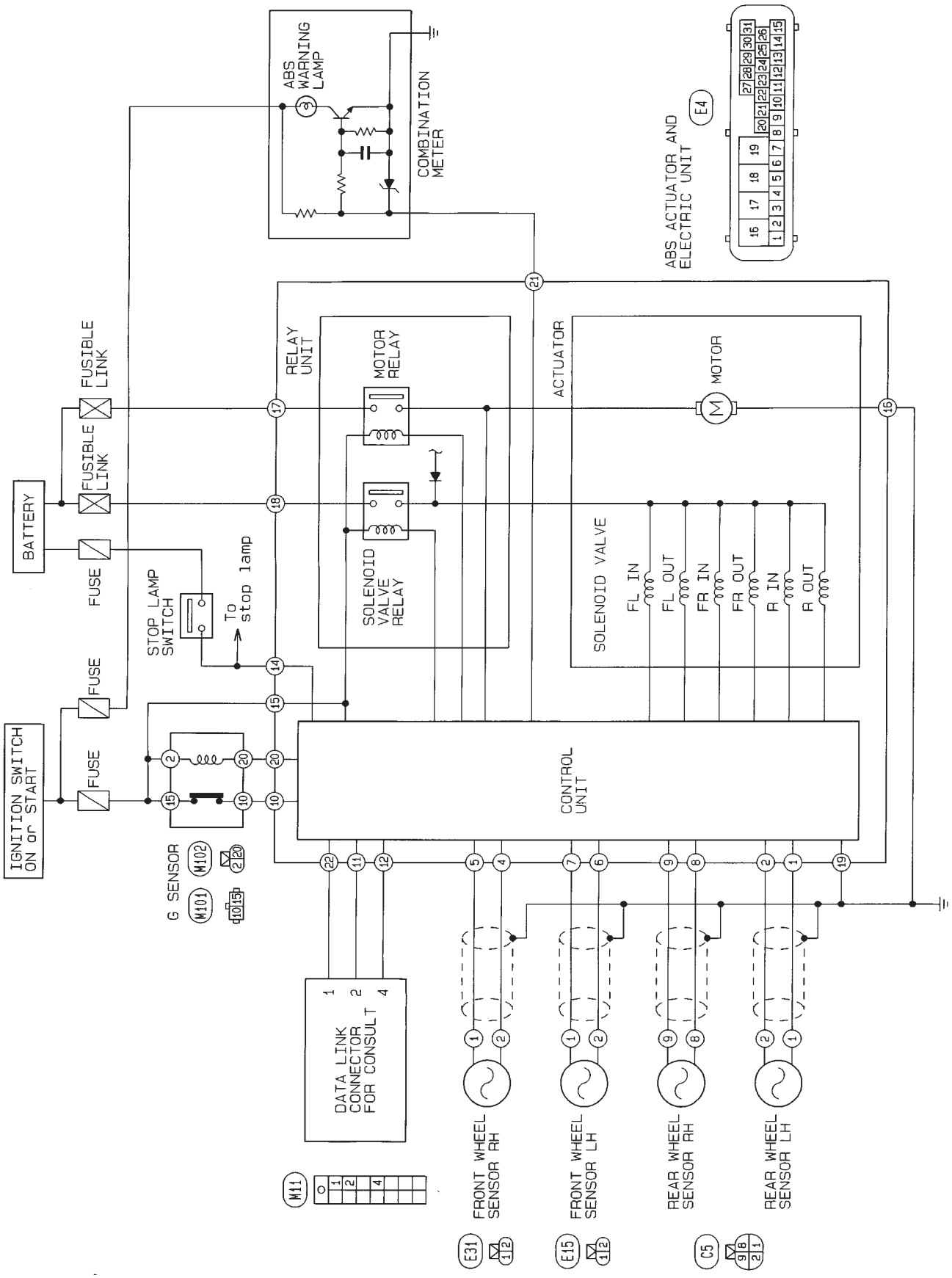

HBR078

Wiring Diagram — ABS —/4WD LHD Models

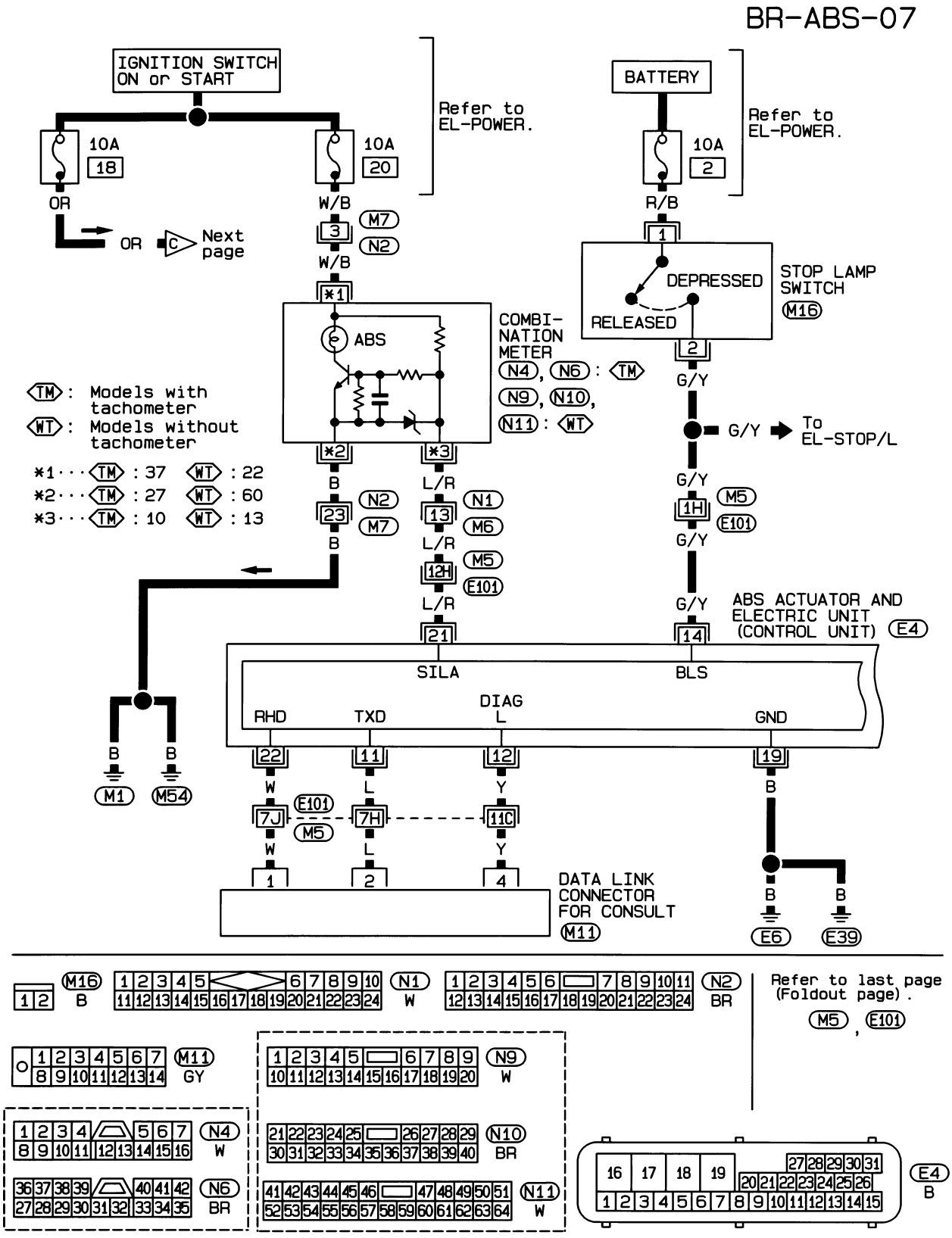

HBR090

Wiring Diagram — ABS —/4WD LHD Models (Cont'd)

BR-ABS-08

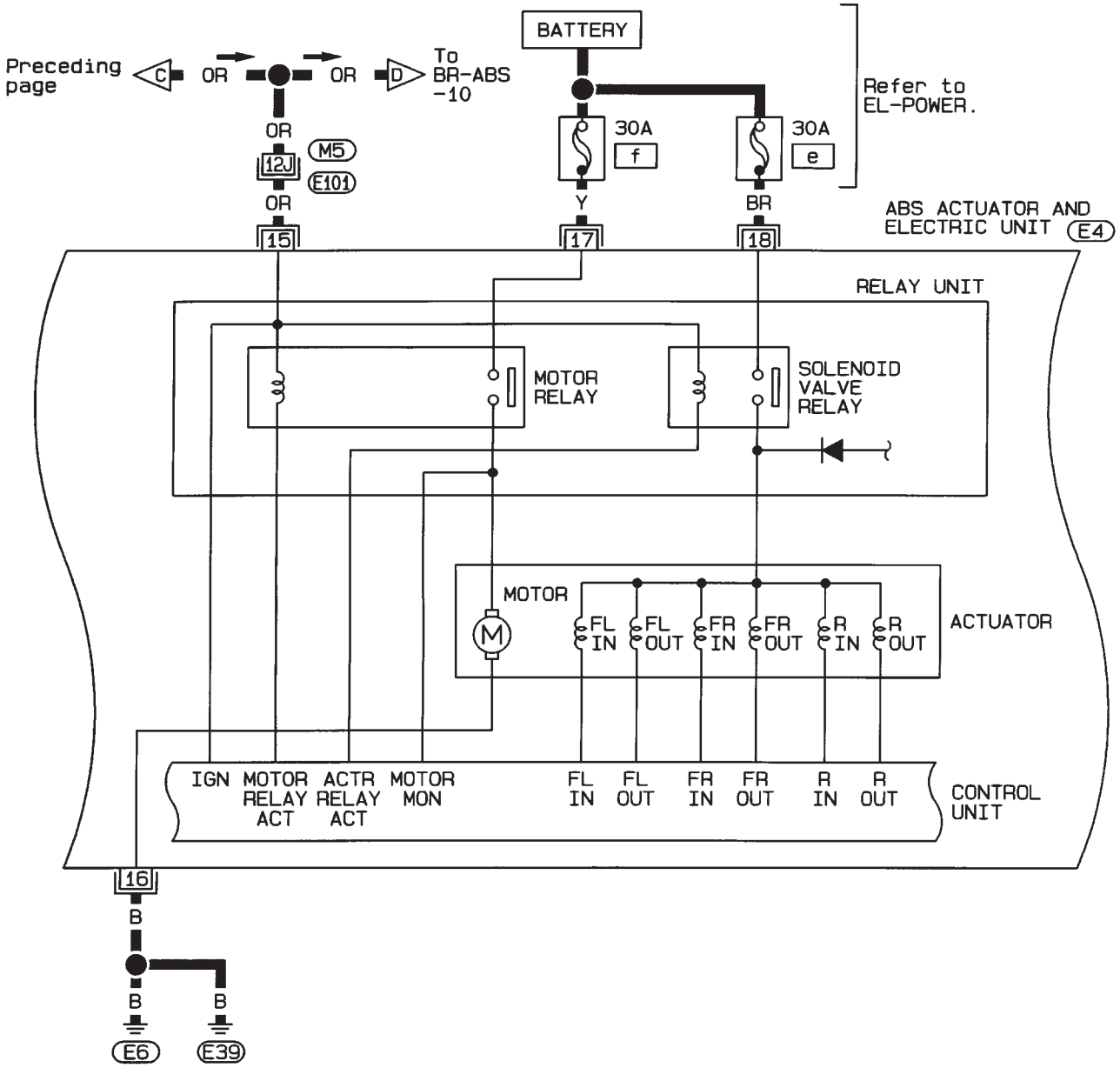

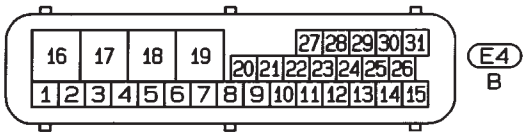

Refer to last page (Foldout page).

M5, E101

HBR075

Wiring Diagram — ABS —/4WD LHD Models (Cont'd)

BR-ABS-09

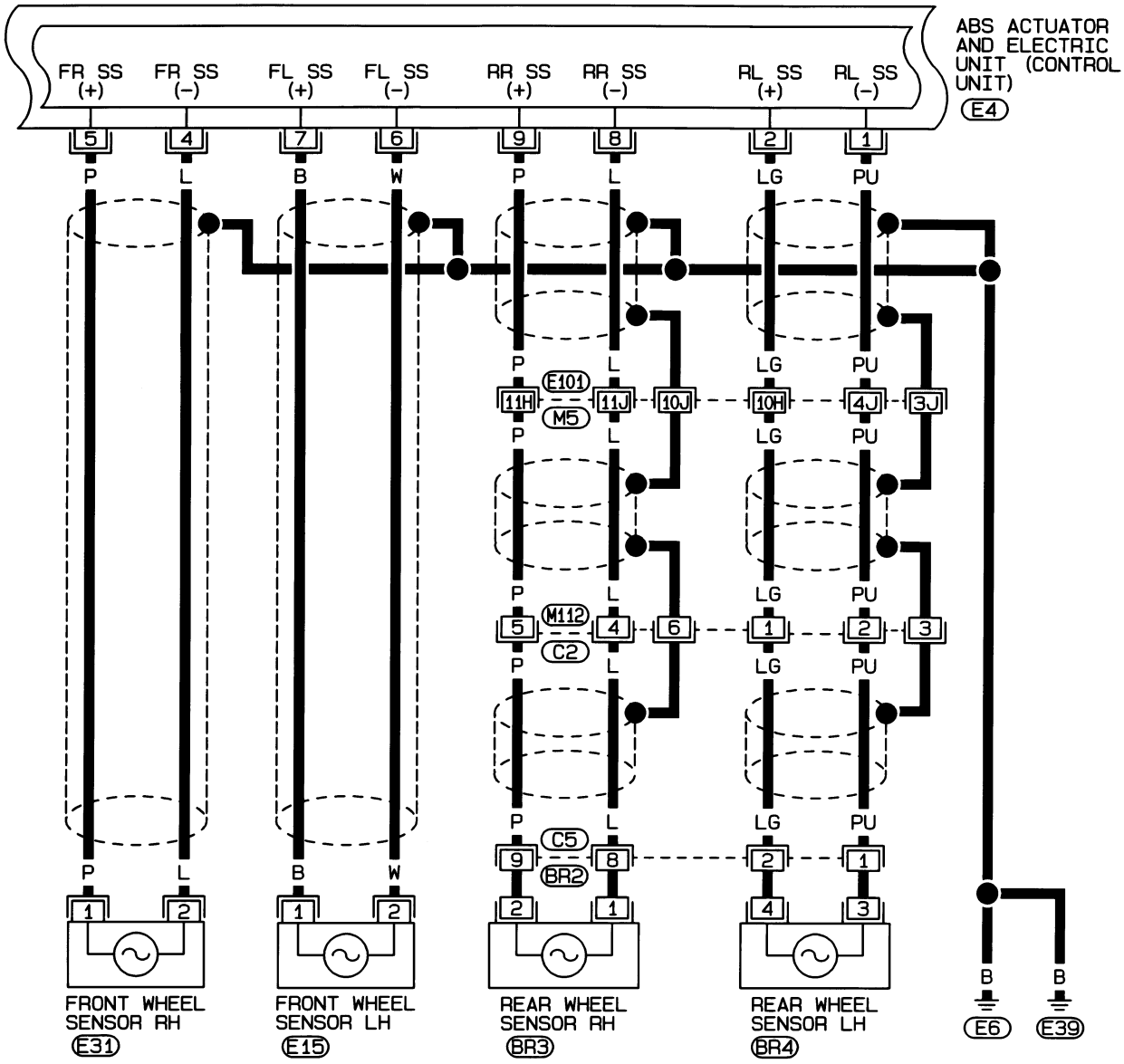

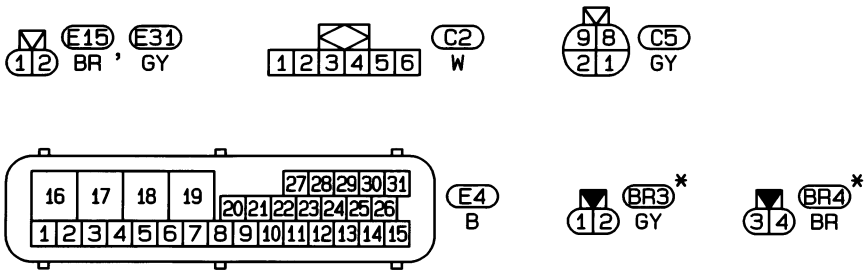

Refer to last page (Foldout page).

M5, E101

* : This connector is not shown in "HARNESS LAYOUT", EL section.

HBR091

Wiring Diagram — ABS —/4WD LHD Models (Cont'd)

BR-ABS-10

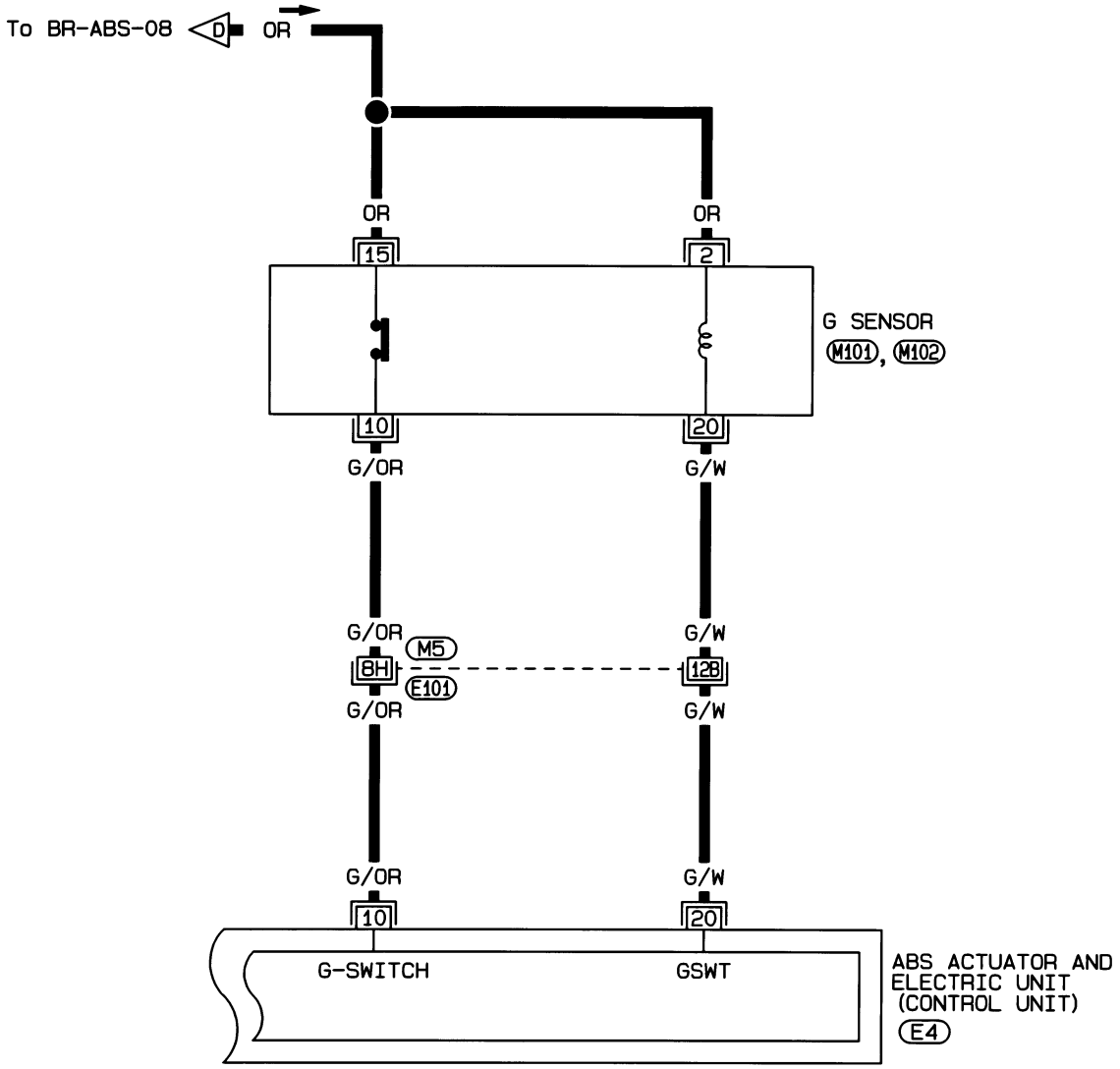

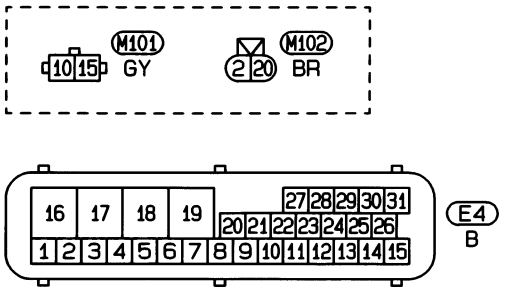

Refer to last page (Foldout page).

M5, E101

HBR092

Wiring Diagram — ABS —/4WD RHD Models

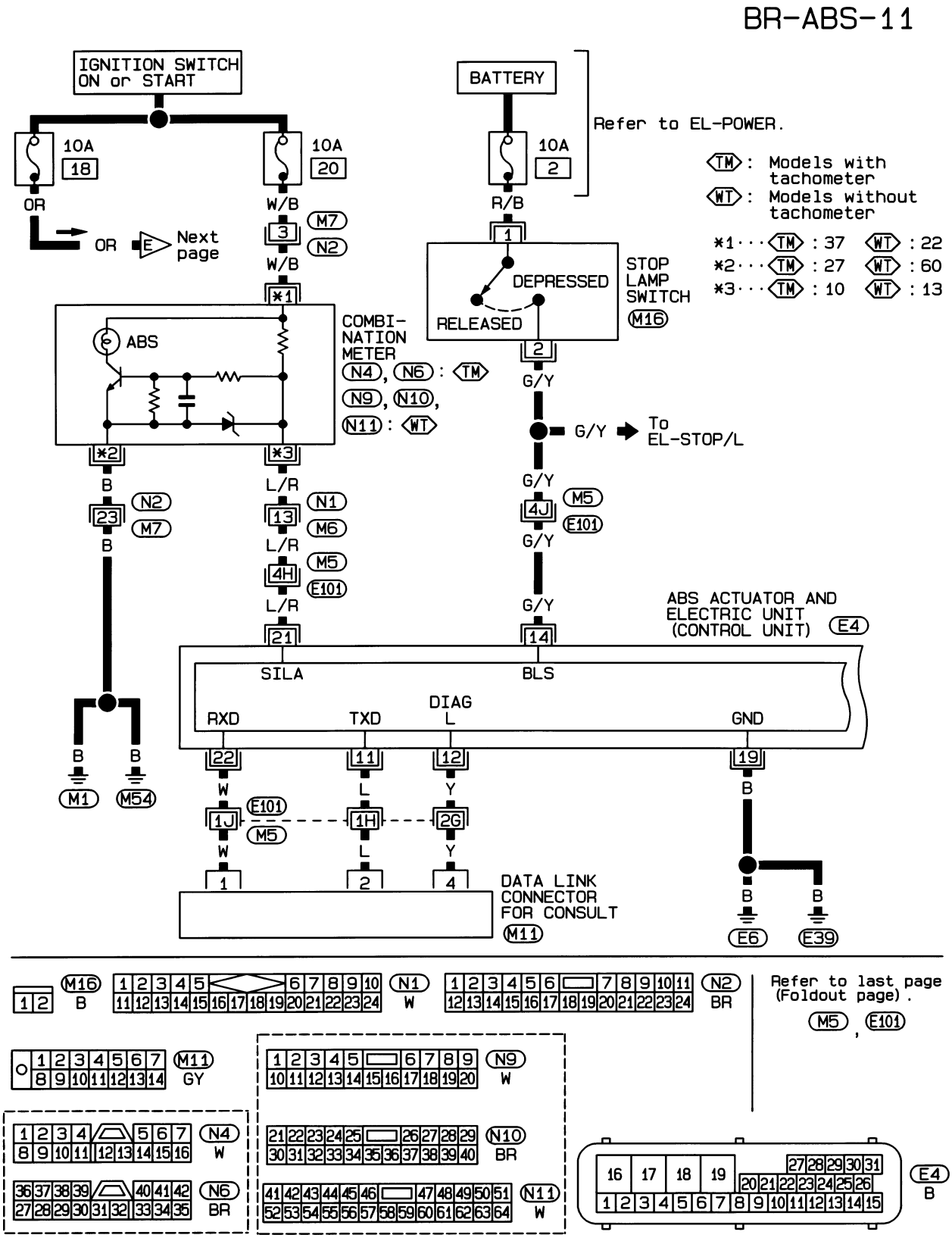

HBR093

Wiring Diagram — ABS —/4WD RHD Models (Cont'd)

BR-ABS-12

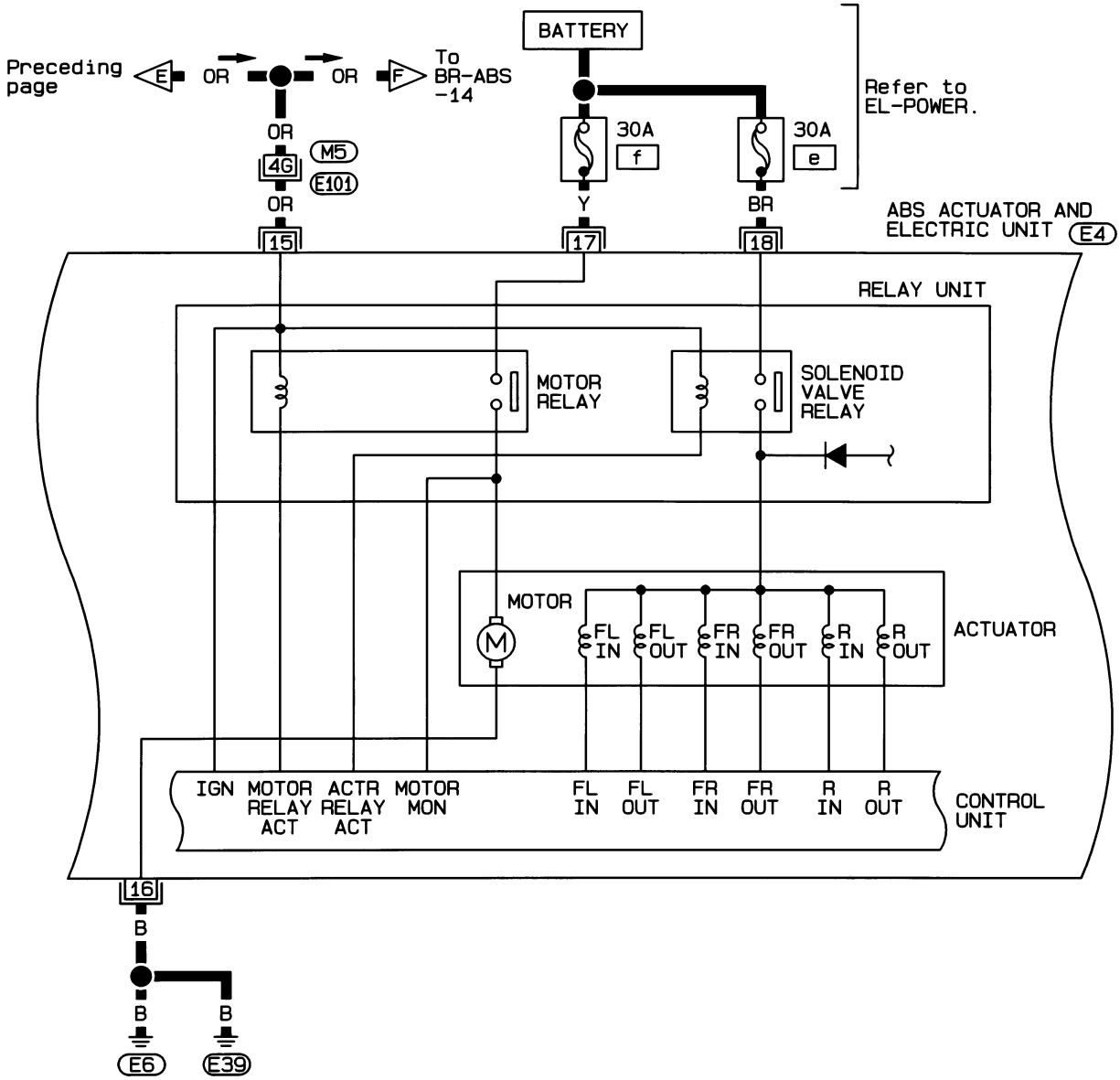

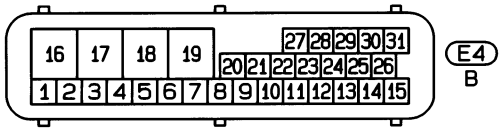

Refer to last page (Foldout page).

M5, E101

HBR094

Wiring Diagram — ABS —/4WD RHD Models (Cont'd)

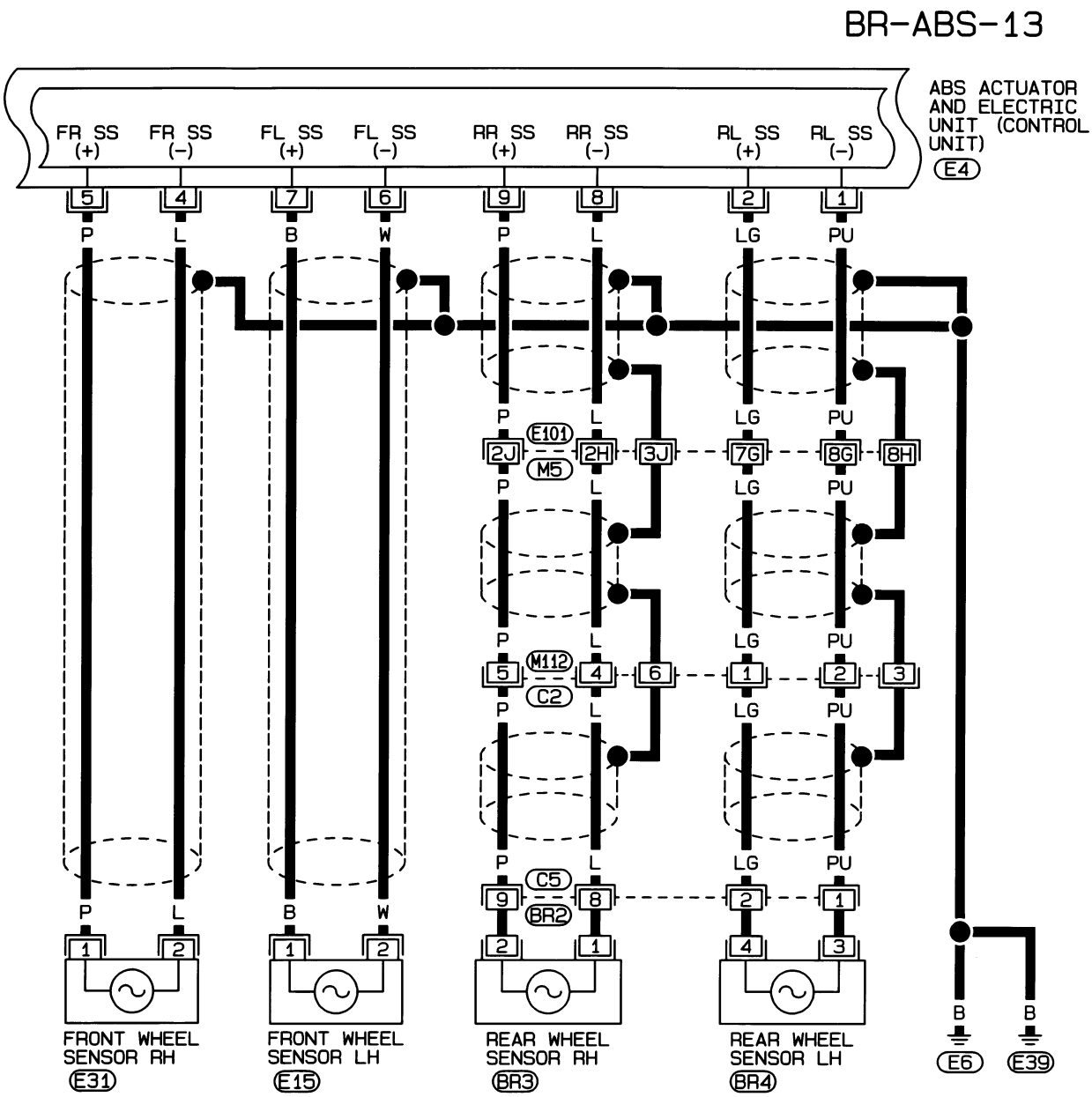

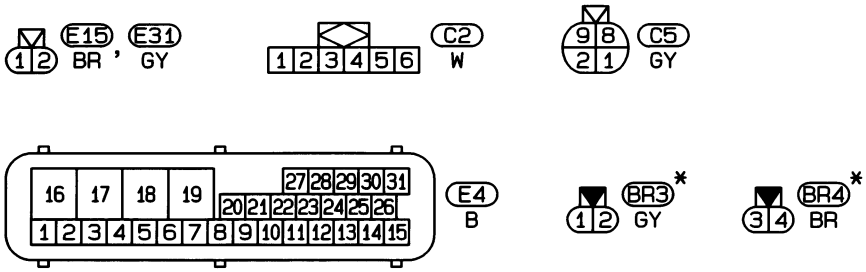

Refer to last page (Foldout page).

M5, E101

* : This connector is not shown in "HARNESS LAYOUT", EL section.

HBR095

Wiring Diagram — ABS —/4WD RHD Models (Cont'd)

BR-ABS-14

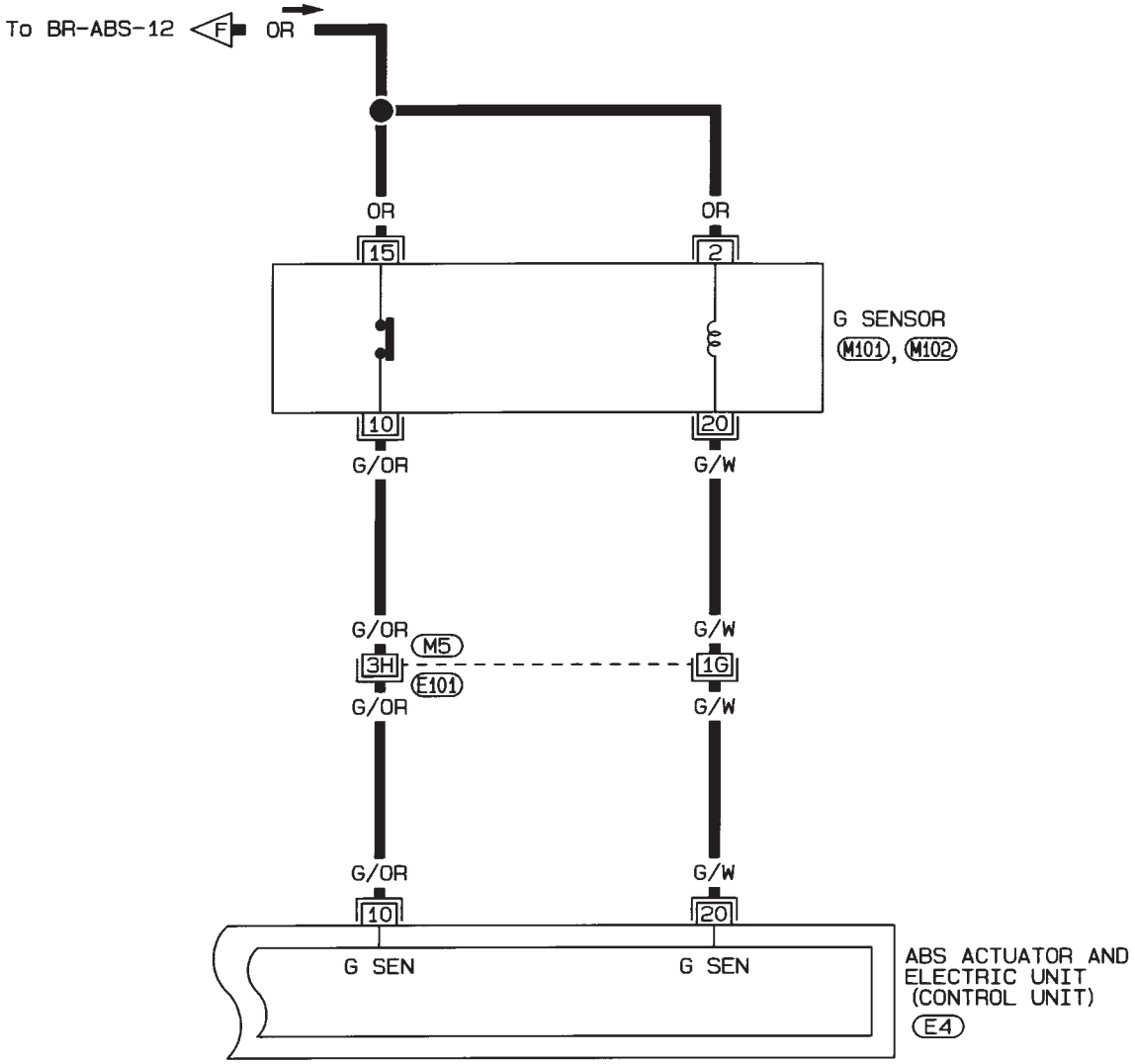

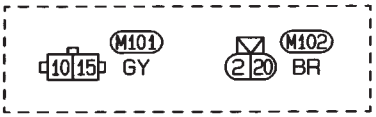

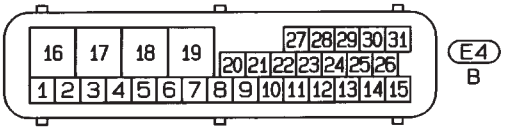

Refer to last page (Foldout page).

M5, E101

HBR083

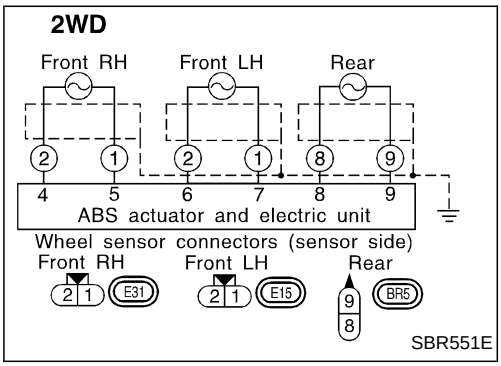

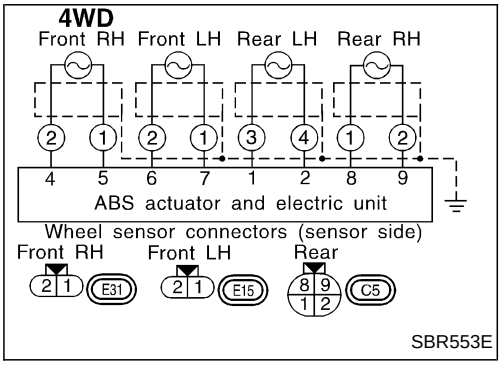

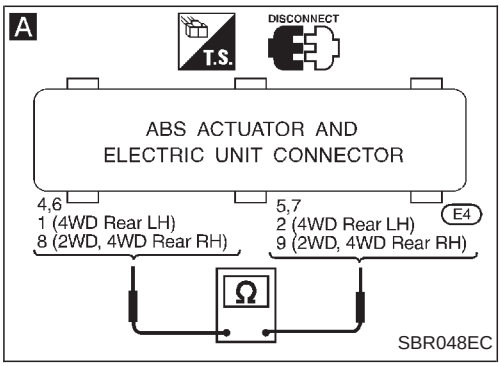

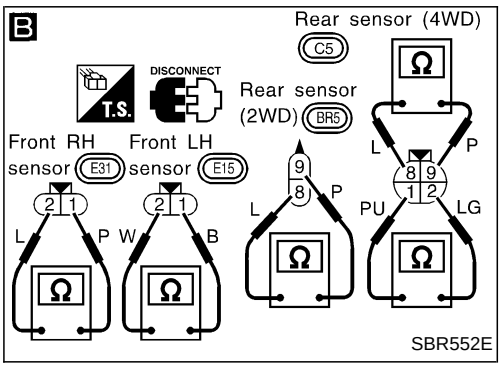

Diagnostic Procedure 1 (Wheel sensor or rotor)

Malfunction code No. 21, 22, 25, 26, 31, 32, 35, 36 or 18

INSPECTION START

1. Disconnect connectors from ABS actuator and electric unit and wheel sensor of malfunction code No. Check terminals for damage or loose connections. Then reconnect connectors.
2. Carry out self-diagnosis again.
   Does warning lamp activate again?

No → Inspection end

Yes ↓

A

CHECK WHEEL SENSOR ELECTRICAL.

1. Disconnect ABS actuator and electric unit connector.
2. Check resistance between ABS actuator and electric unit connector (E4) (body side) terminals.
   Code No. 21 or 22 (Front RH wheel)
   Terminals ④ and ⑤
   Code No. 25 or 26 (Front LH wheel)
   Terminals ⑥ and ⑦
   Code No. 31 or 32 (4WD Rear RH wheel)
   Terminals ⑧ and ⑨
   Code No. 35 or 36 (2WD Rear, 4WD Rear LH wheel)
   Terminals ⑧ and ⑨ (2WD Rear wheel)
   Terminals ① and ② (4WD Rear LH wheel)
   Resistance:
   Front 1.44 - 1.76 kΩ
   Rear (2WD) 1.22 - 1.48 kΩ
   Rear (4WD) 1.44 - 1.76 kΩ

OK → Ⓐ (Go to next page.)

NG ↓

B

CHECK WHEEL SENSOR.

Check each sensor for resistance.
Resistance: Front 1.44 - 1.76 kΩ
Rear (2WD) 1.22 - 1.48 kΩ
Rear (4WD) 1.44 - 1.76 kΩ

OK → Check the following.
- Harness connectors (E4), (E31), (E15), (BR5), (C5)
- Harness for open or short between wheel sensor connectors and ABS actuator and electric unit

If NG, repair harness or connectors.

NG ↓

REPLACE.

Replace wheel sensor.

Diagnostic Procedure 1 (Wheel sensor or rotor) (Cont'd)

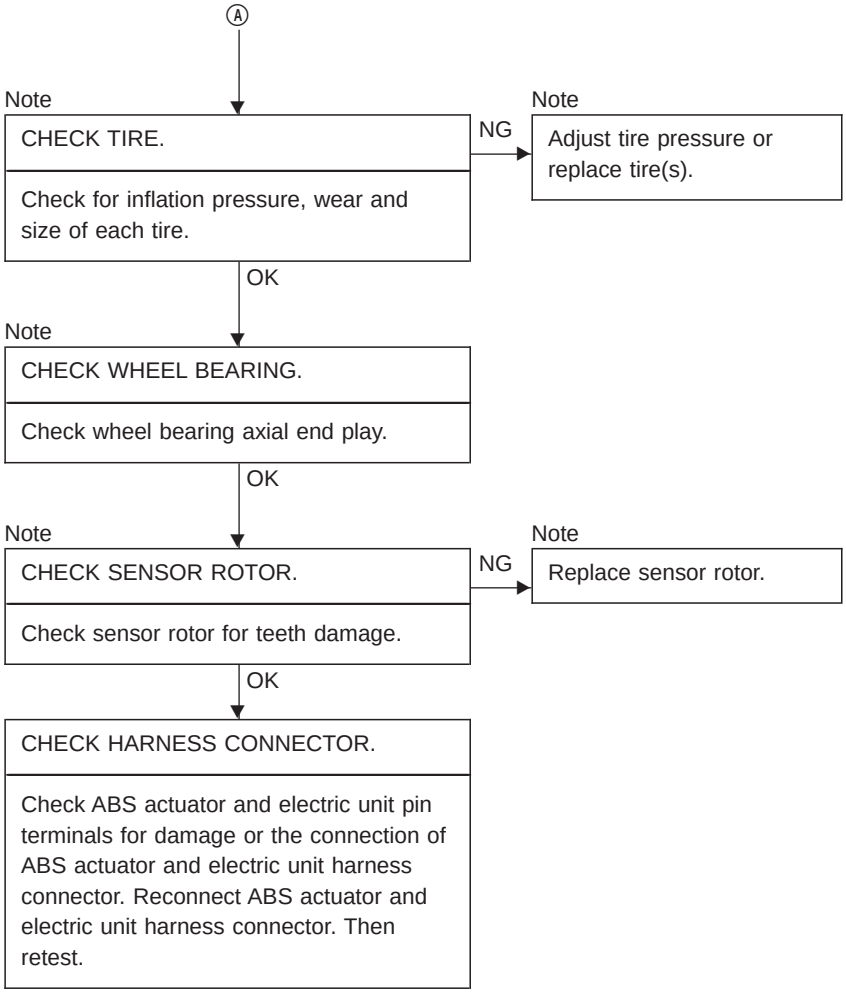

Note: Wheel position should be distinguished by code numbers except code No. 18 (sensor rotor).

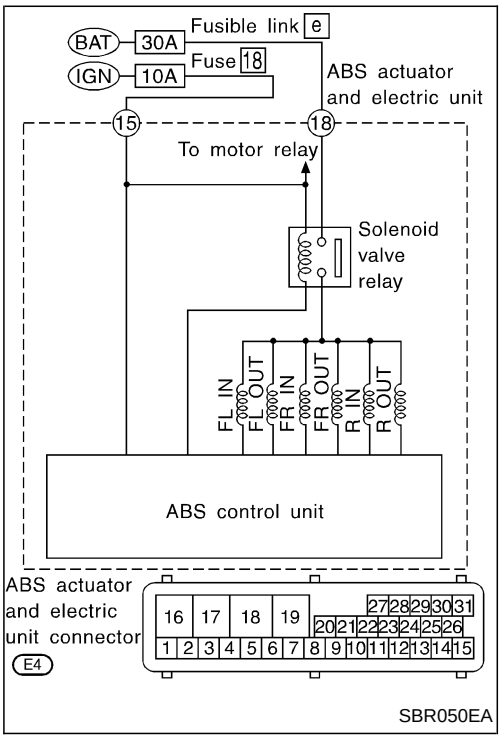

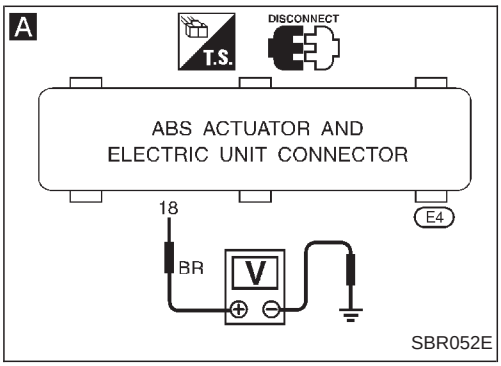

Diagnostic Procedure 2 (ABS actuator solenoid valve and solenoid valve relay)

Malfunction code No. 41, 45, 55, 42, 46, 56, 63

CHECK FUSIBLE LINK.

Check 30A fusible link e. For fusible link layout, refer to POWER SUPPLY ROUTING in EL section.

NG → Ⓐ (Go to next page.)

OK ↓

CHECK FUSE.

Check 10A fuse 18. For fuse layout, refer to POWER SUPPLY ROUTING in EL section.

NG → Ⓑ (Go to next page.)

OK ↓

CHECK CONNECTOR.

1. Disconnect ABS actuator and electric unit connector. Check terminals for damage or loose connection. Then reconnect connector.
2. Carry out self-diagnosis again.
   Does warning lamp activate again?

No → Inspection end

Yes ↓

CHECK ABS ACTUATOR AND ELECTRIC UNIT GROUND CIRCUIT.

Refer to ABS ACTUATOR AND ELECTRIC UNIT GROUND in Ground Circuit Check. Refer to original Service Manual.

NG → Repair harness and connector.

OK ↓

A

CHECK SOLENOID VALVE RELAY POWER SUPPLY CIRCUIT.

1. Disconnect ABS actuator and electric unit connector.
2. Check voltage between ABS actuator and electric unit connector E4 (body side) terminal ⑱ and ground.
   Battery voltage should exist.

NG → Check the following.
- Harness connector E4
- Harness for open or short between ABS actuator and electric unit and fusible link

If NG, repair harness or connector.

OK ↓

REPLACE.

Replace ABS actuator and electric unit.

Diagnostic Procedure 2 (ABS actuator solenoid valve and solenoid valve relay) (Cont'd)

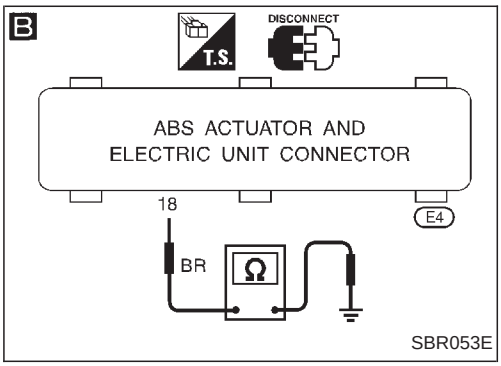

Ⓐ

REPLACE.

Replace fusible link.
Does the fusible link blow out when ignition switch is turned "ON"?

No → Inspection end

Yes ↓

B

CHECK SOLENOID VALVE RELAY POWER SUPPLY CIRCUIT.

1. Disconnect ABS actuator and electric unit connector.
2. Check continuity between ABS actuator and electric unit connector (E4) (body side) terminal ⑱ and ground.
   Continuity should not exit.

NG → Check the following.
- Harness connector (E4)
- Harness for open or short between ABS actuator and electric unit and fusible link

If NG, repair harness or connector.

OK ↓

REPLACE.

Replace ABS actuator and electric unit.

Ⓑ

REPLACE.

Replace fuse.
Does the fuse blow out when ignition switch is turned "ON"?

Yes → Check the following.
- Harness connector (E4)
- Harness for open or short between ABS actuator and electric unit and fuse

If NG, repair harness or connector.

No ↓

END

INSPECTION END

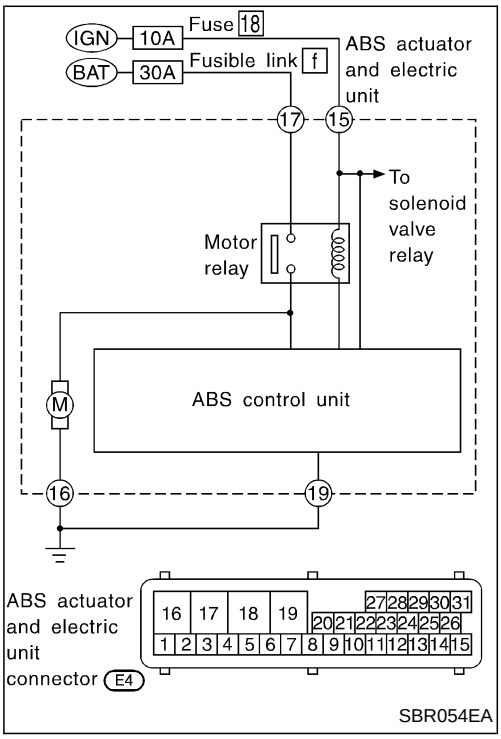

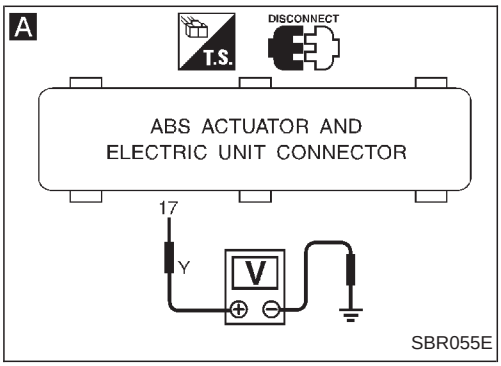

Diagnostic Procedure 3 (Motor relay or motor)

Malfunction code No. 61

CHECK FUSIBLE LINK.

Check 30A fusible link f. For fusible link layout, refer to POWER SUPPLY ROUTING in EL section.

NG → A (Go to next page.)

OK ↓

CHECK CONNECTOR.

1. Disconnect ABS actuator and electric unit connector. Check terminals for damage or loose connection. Then reconnect connector.
2. Carry out self-diagnosis again.
   Does warning lamp activate again?

No → Inspection end

Yes ↓

A

CHECK MOTOR RELAY POWER SUPPLY CIRCUIT.

1. Disconnect ABS actuator and electric unit connector.
2. Check voltage between ABS actuator and electric unit connector E4 (body side) terminal 17 and ground.
   Battery voltage should exist.

NG → Check the following.
- Harness connector E4
- Harness for open or short between ABS actuator and electric unit and fusible link

If NG, repair harness or connector.

OK ↓

CHECK ABS ACTUATOR AND ELECTRIC UNIT GROUND.

Refer to ABS ACTUATOR AND ELECTRIC UNIT GROUND in Ground Circuit Check. Refer to original Service Manual.

NG → Repair harness and terminals.

OK ↓

REPLACE.

Replace ABS actuator and electric unit.

Diagnostic Procedure 3 (Motor relay or motor) (Cont'd)

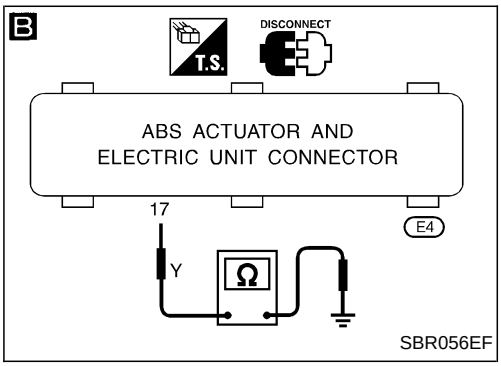

Ⓐ

REPLACE.

Replace fusible link.
Does the fusible link blow out when ignition switch is turned "ON"?

No → Inspection end

Yes ↓

B

CHECK ABS ACTUATOR MOTOR POWER SUPPLY CIRCUIT.

1. Disconnect battery cable and ABS actuator and electric unit connector (E4).
2. Check continuity between ABS actuator and electric unit connector (E4) (body side) terminal ⑰ and ground.
   Continuity should not exist.

NG →
Check the following
- Harness connector (E4)
- Harness for open or short between ABS actuator and electric unit and fusible link

If NG, repair harness or connector.

OK ↓

CHECK HARNESS CONNECTOR.

Check ABS actuator and electric unit pin terminals for damage or the connection of ABS actuator and electric unit harness connector.
Reconnect ABS actuator and electric unit harness connector. Then retest.

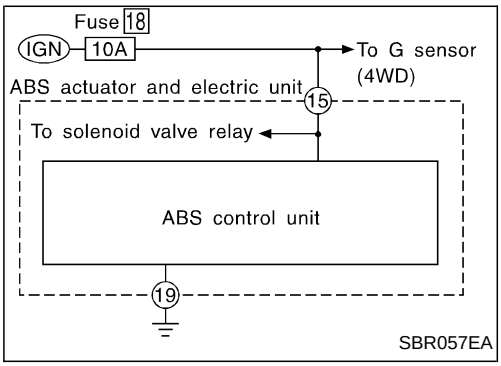

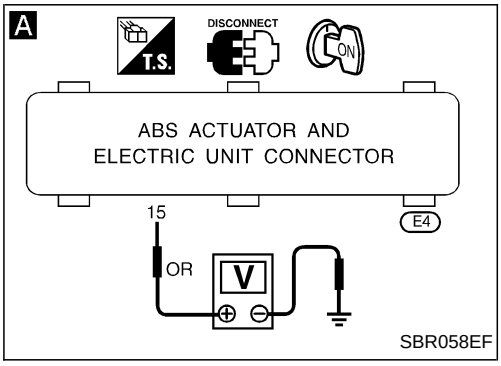

Diagnostic Procedure 4 (Low voltage)

Malfunction code No. 57

CHECK CONNECTOR.

1. Disconnect ABS actuator and electric unit connector. Check terminals for damage or loose connection. Then reconnect connector.
2. Carry out self-diagnosis again.
   Does warning lamp activate again?

No → Inspection end

Yes ↓

A

CHECK ABS CONTROL UNIT POWER SUPPLY CIRCUIT.

1. Disconnect ABS actuator and electric unit connector.
2. Check voltage between ABS actuator and electric unit connector (E4) (body side) terminal (15) and ground.
   Battery voltage should exist when ignition switch is turned ON.

NG → (A) (See below.)

OK ↓

CHECK ABS CONTROL UNIT GROUND.

Refer to ABS ACTUATOR AND ELECTRIC UNIT GROUND in Ground Circuit Check. Refer to original Service Manual.

NG → Repair harness and connector.

OK ↓

CHECK HARNESS CONNECTOR.

Check ABS actuator and electric unit pin terminals for damage or the connection of ABS actuator and electric unit harness connector. Reconnect ABS actuator and electric unit harness connector. Then retest.

(A) ↓

CHECK FUSE.

Check 10A fuse 18 . For fuse layout, refer to POWER SUPPLY ROUTING in EL section.

NG → Replace fuse.

OK ↓

CHECK ABS CONTROL UNIT POWER SUPPLY CIRCUIT.

Check continuity between battery and ABS actuator and electric unit connector (E4) (body side) terminal (15).

NG → Check the following.
- Harness connector (E4)
- Harness for open or short between ABS actuator and electric unit and fuse

If NG, repair harness or connector.

OK ↓

CHECK BATTERY.

Check battery. Refer to BATTERY in EL section.

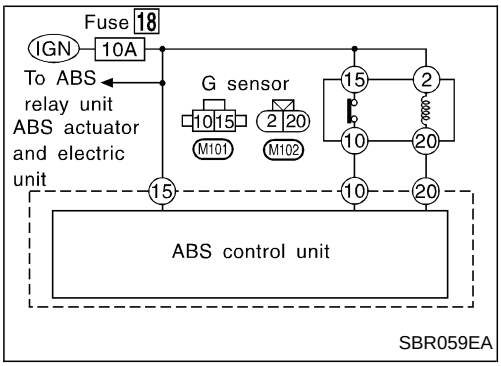

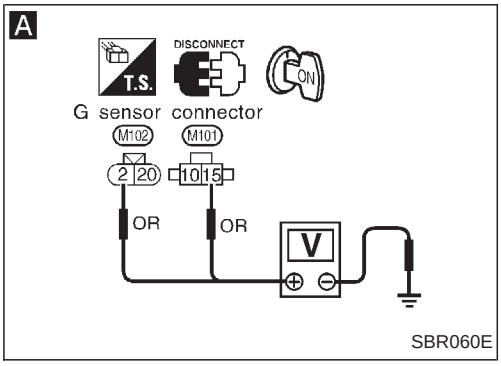

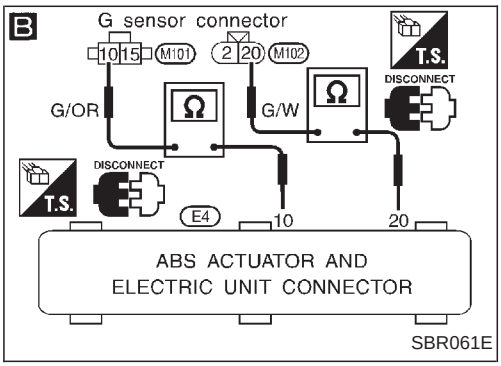

Diagnostic Procedure 5 (G sensor)

Malfunction code No. 17

CHECK G SENSOR POWER SUPPLY CIRCUIT.

Check 10A fuse 18 . For fuse layout, refer to POWER SUPPLY ROUTING in EL section.

NG → Replace fuse.

OK ↓

CHECK CONNECTOR.

1. Disconnect ABS actuator and electric unit connector. Check terminals for damage or loose connection. Then reconnect connector.
2. Carry out self-diagnosis again.
   Does warning lamp activate again?

No → Inspection end

Yes ↓

CHECK G SENSOR.

Refer to G SENSOR in Electrical Components Inspection, BR-27.

NG → Replace G sensor.

OK ↓

A

CHECK G SENSOR POWER SUPPLY CIRCUIT.

1. Disconnect G sensor connector.
2. Check voltage between G sensor connector (M101), (M102) (body side) terminal ②, ⑮ and ground.
   Battery voltage should exist.

NG → Check the following.
- Harness connectors (M101), (M102), (E4)
- Harness for open or short between G sensor and ABS actuator and electric unit

If NG, repair harness or connectors.

OK ↓

B

CHECK G SENSOR GROUND.

1. Disconnect ABS actuator and electric unit connector and G sensor connectors.
2. Check continuity between ABS actuator and electric unit connector (E4) (body side) terminals ⑩, ⑳ and G sensor connectors (M101), (M102) (body side) terminals ⑩, ⑳.
   Continuity should exist.

NG → Check the following.
- Harness connectors (M101), (M102), (E4)
- Harness for open or short between G sensor and ABS actuator and electric unit

If NG, repair harness or connectors.

OK ↓

CHECK HARNESS CONNECTOR.

Check ABS actuator and electric unit pin terminals for damage or the connection of ABS actuator and electric unit harness connector. Reconnect ABS actuator and electric unit harness connector. Then retest.

Diagnostic Procedure 5 (G sensor) (Cont'd)

ELECTRICAL COMPONENTS INSPECTION

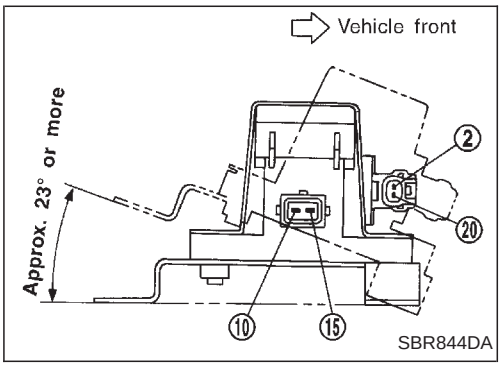

G sensor

CAUTION:

The G sensor is easily damaged if it sustains an impact. Be careful not to drop or bump it.

1. Measure resistance between terminals ⑩ and ⑮ of G sensor unit connector.

G sensor condition	Resistance between terminals ⑩ and ⑮	G sensor switch condition
Installed in vehicle	1.4 - 1.6 kΩ	"ON"
Tilted as shown in figure	4.7 - 5.5 kΩ	"OFF"

2. Measure resistance between terminals ② and ⑳ of the G sensor unit connector.

Resistance:	70 - 124 Ω

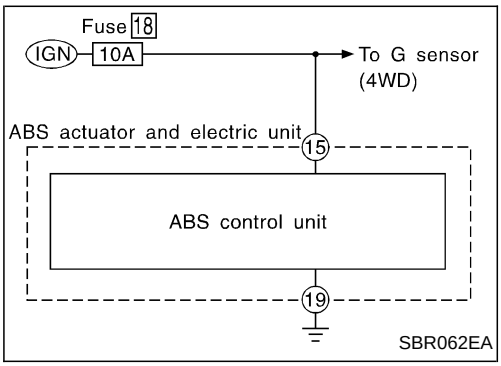

Diagnostic Procedure 6 (Control unit)

Malfunction code No. 71

CHECK CONNECTOR.

1. Disconnect ABS actuator and electric unit connector.
   Check terminals for damage or loose connections. Then reconnect connector.
2. Carry out self-diagnosis again.
   Does warning lamp activate again?

→ No → Inspection end

↓ Yes

ABS CONTROL UNIT POWER SUPPLY CHECK

Check voltage. Refer to **A** in Diagnostic Procedure 4, BR-25.

↓

CHECK SELF-DIAGNOSTIC RESULTS

Does warning lamp indicate code No. 71 again?

→ Yes → Replace ABS actuator and electric unit.

↓ No

INSPECTION

Inspect the system according to the code No.

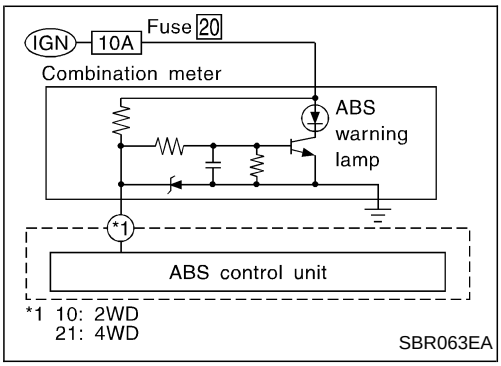

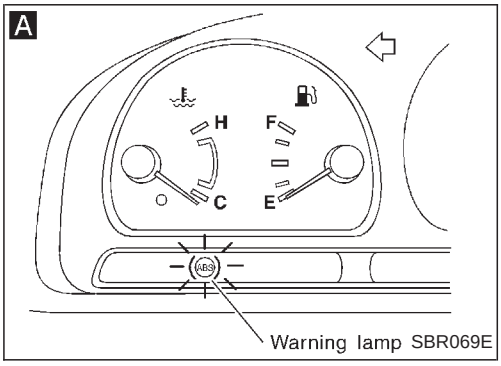

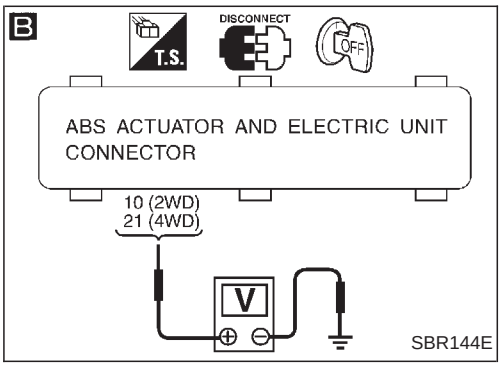

Diagnostic Procedure 12 (Warning lamp does not come on when ignition switch is turned ON.)

CHECK FUSE.

Check 10A fuse 20 . For fuse layout, refer to POWER SUPPLY ROUTING in EL section.

NG → Replace fuse.

OK ↓

A

CHECK WARNING LAMP ACTIVATE.

Disconnect ABS actuator and electric unit connector.
Does the warning lamp activate?

Yes → Ⓐ (Go to next page.)

No ↓

B

CHECK HARNESS FOR SHORT.

1. Disconnect ABS actuator and electric unit connector.
2. Check voltage between ABS actuator and electric unit connector (E4) (body side) terminal ⑩ (2WD) or ㉑ (4WD) and ground.
   Battery voltage should not exist.

NG → Repair harness or connector.

OK ↓

CHECK COMBINATION METER.

Check combination meter. Refer to WARNING LAMPS in EL section.

Diagnostic Procedure 12 (Warning lamp does not come on when ignition switch is turned ON.) (Cont'd)

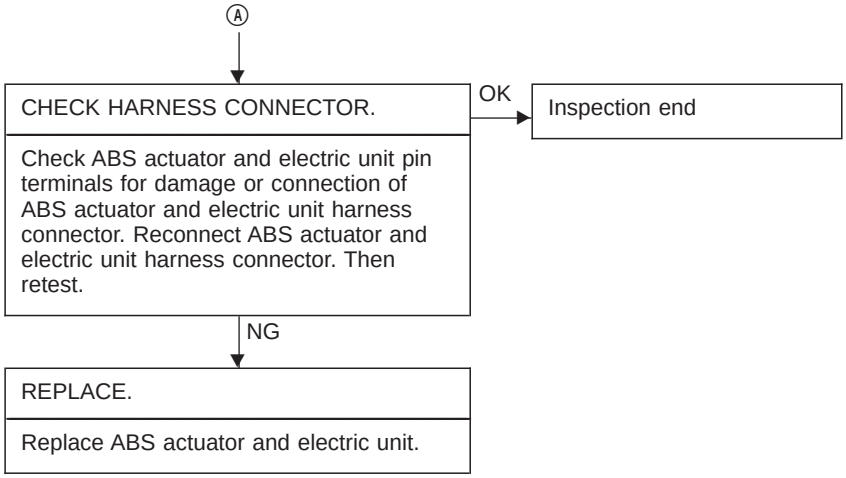

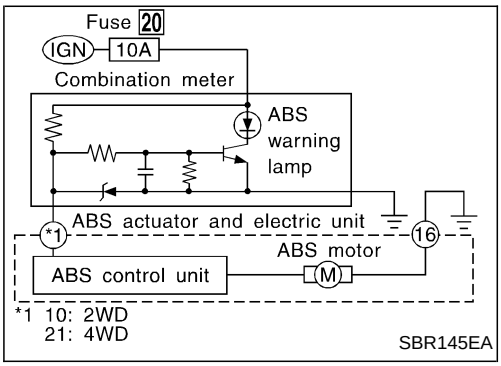

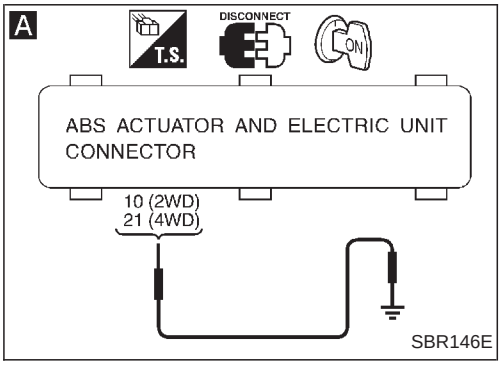

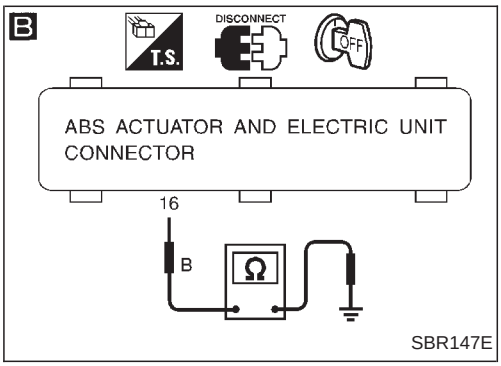

Diagnostic Procedure 13 (Warning lamp stays on when ignition switch is turned ON.)

A

CHECK WARNING LAMP.

1. Disconnect ABS actuator and electric unit connector.
2. Connect suitable wire between ABS actuator and electric unit connector E4 (body side) terminal 10 (2WD) or 21 (4WD) and ground.
   Warning lamp should not activate.

NG → Repair combination meter. Check the following.
- Harness connector E4
- Harness for open or short between ABS actuator and electric unit and fuse

If NG, repair harness or connector.

OK ↓

CHECK HARNESS CONNECTOR.

Check ABS actuator and electric unit pin terminals for damage or the connection of ABS actuator and electric unit harness connector. Reconnect ABS actuator and electric unit harness connector. Then retest.

OK → Inspection end

NG ↓

B

CHECK ABS MOTOR GROUND.

1. Turn ignition switch “OFF”.
2. Disconnect ABS actuator and electric unit connector.
3. Check continuity between ABS actuator and electric unit connector E4 (body side) 16 and ground.
   Continuity should exist.

NG → Check the following.
- Harness connector E4
- Harness for open or short between ABS actuator and electric unit and ground

If NG, repair harness or connector.

OK ↓

REPLACE.

Replace ABS actuator and electric unit.

General Specifications

2WD MODELS

Destination	Australia		Except Australia and Middle East		Middle East		Europe	
Applied model	KA24DE	TD27	Without ABS	With ABS	Except for KA24DE engine model with ABS	KA24DE engine model with ABS	With ABS	Without ABS
Front brake								
Type	CL28VD disc brake	CL28VA disc brake		CL28VD disc brake				
Cylinder bore diameter mm (in)	42.8 (1.685) x 2	60.6 (2.386)		42.8 (1.685) x 2				
Pad dimension mm (in) Length x width x thickness	146.6 x 48.5 x 10.0 (5.77 x 1.909 x 0.394)	IN: 126.5 x 43 x 11 (4.98 x 1.69 x 0.43) OUT: 129.0 x 43 x 11 (5.08 x 1.69 x 0.43)		146.6 x 48.5 x 10.0 (5.77 x 1.909 x 0.394)				
Rotor outer diameter x thickness mm (in)	260 x 26 (10.24 x 1.02)	250 x 22 (9.84 x 0.87)		260 x 26 (10.24 x 1.02)				
Rear brake								
Type	LT26B drum brake							
Wheel cylinder bore diameter mm (in)	23.81 (15/16)							
Lining dimension mm (in) Length x width x thickness	249.6 x 50 x 5.5 (9.83 x 1.97 x 0.217)							
Drum inner diameter mm (in)	260 (10.24)							
Master cylinder bore diameter mm (in)	23.81 (15/16)			25.4 (1)	23.81 (15/16)	25.4 (1)		23.81 (15/16)
Control valve								
Type	LSV							
Split point x reducing ratio kPa (bar, kg/cm^2, psi)	(Variable) x 0.15							
Brake booster								
Model	M195T		S230	M195T		M215T	M195T	
Diaphragm diameter mm (in)	Primary: 205 (8.07) Secondary: 180 (7.09)		230 (9.06)	Primary: 205 (8.07) Secondary: 180 (7.09)		Primary: 230 (9.06) Secondary: 205 (8.07)	Primary: 205 (8.07) Secondary: 180 (7.09)	
Recommended brake fluid	DOT 3						DOT 4*	

* Never mix DOT 3 and DOT 4 (DOT 3 is filled at factory).

General Specifications (Cont'd)

4WD MODELS

Destination	Australia		Except Australia and Middle East				Middle East		Europe
Applied model	Except QD32	QD32	QD32		Except QD32		Without ABS	With ABS	All
			With ABS	Without ABS	With ABS	Witout ABS			
Front brake									
Type	CL28VD disc brake				CL28VA disc brake		CL28VD disc brake		
Cylinder bore diameter mm (in)	42.8 (1.685) x 2				60.6 (2.386)		42.8 (1.685) x 2		
Pad dimension mm (in) Length x width x thickness	146.6 x 48.5 x 10 (5.77 x 1.909 x 0.39)				IN: 126.5 x 43 x 11 (4.98 x 1.69 x 0.43) OUT: 129.0 x 43 x 11 (5.08 x 1.69 x 0.43)		146.6 x 48.5 x 10 (5.77 x 1.909 x 0.39)		
Rotor outer diameter x thickness mm (in)	277 x 26 (10.91 x 1.02)				267 x 22 (10.51 x 0.87)		277 x 26 (10.91 x 1.02)		
Rear brake									
Type	LT30A drum brake								
Wheel cylinder bore diameter mm (in)	22.22 (7/8)								
Lining dimension mm (in) Length x width x thickness	296.0 x 50.0 x 6.1 (11.65 x 1.969 x 0.240)								
Drum inner diameter mm (in)	295 (11.61)								
Master cylinder bore diameter mm (in)	23.81 (15/16)								
Control valve									
Type	LSV								
Split point x reducing ratio kPa (bar, kg/cm^2, psi)	(Variable) x 0.15								
Brake booster									
Model	M215T	M195T	M215T	M195T	M215T	M195T	M215T		
Diaphragm diameter mm (in)	Primary: 230 (9.06) Secondary: 205 (8.07)	Primary: 250 (9.84) Secondary: 180 (7.09)	Primary: 230 (9.06) Secondary: 205 (8.07)	Primary: 205 (8.07) Secondary: 180 (7.09)	Primary: 230 (9.06) Secondary: 205 (8.07)	Primary: 205 (8.07) Secondary: 180 (7.09)	Primary: 230 (9.06) Secondary: 205 (8.07)		
Recommended brake fluid	DOT 3								DOT 4*

* Never mix DOT 3 and DOT 4 (DOT 3 is filled at factory).