ENGINE CONTROL SYSTEM

SECTION EC

CONTENTS

DIAGNOSTIC TROUBLE CODE INDEX.....2
Alphabetical & Numerical Index for DTC (KA engine).....2
PRECAUTIONS AND PREPARATION.....3
Special Service Tools.....3
Commercial Service Tool.....5
Supplemental Restraint System (SRS) "AIR BAG" (4WD models).....5
Supplemental Restraint System (SRS) "AIR BAG" (2WD models).....5

KA

PRECAUTIONS AND PREPARATION.....6
Engine Fuel & Emission Control System.....6
Precautions.....7
ENGINE AND EMISSION CONTROL OVERALL SYSTEM.....9
Circuit Diagram.....9
System Diagram.....10
ECCS Component Parts Location.....11
Vacuum Hose Drawing.....13
System Chart.....14
ENGINE AND EMISSION BASIC CONTROL SYSTEM DESCRIPTION.....15
Multiport Fuel Injection (MFI) System.....15
Distributor Ignition (DI) System.....18
Air Conditioning Cut Control.....19
Fuel Cut Control (at no load & high engine speed).....19
EVAPORATIVE EMISSION SYSTEM.....20
Description.....20
Inspection.....20
POSITIVE CRANKCASE VENTILATION.....22
Description.....22
Inspection.....22
BASIC SERVICE PROCEDURE.....23
Fuel Pressure Release.....23
Fuel Pressure Check.....23
Injector Removal and Installation.....24
Fast Idle Cam (FIC) Inspection and Adjustment.....25
Idle Speed/Ignition Timing/Idle Mixture Ratio Adjustment.....26
ON BOARD DIAGNOSTIC SYSTEM DESCRIPTION.....37
Introduction.....37
Diagnostic Trouble Code (DTC).....37
Malfunction Indicator Lamp (MIL).....39
CONSULT.....45
TROUBLE DIAGNOSIS - Introduction.....54
Introduction.....54
Diagnostic Worksheet.....54
TROUBLE DIAGNOSIS - Work Flow.....56
Work Flow.....56
Description for Work Flow.....57
TROUBLE DIAGNOSIS - Basic Inspection.....58
Basic Inspection.....58
TROUBLE DIAGNOSIS - General Description.....61
Fail-Safe Chart.....61
Symptom Matrix Chart.....62
CONSULT Reference Value in Data Monitor Mode.....64
Major Sensor Reference Graph in Data Monitor Mode.....66
ECM Terminals and Reference Value.....68
TROUBLE DIAGNOSIS FOR POWER SUPPLY.....74
Main Power Supply and Ground Circuit.....74
TROUBLE DIAGNOSIS FOR "CAMSHAFT POSI SEN" (DTC 11).....81
Camshaft Position Sensor (CMPS).....81
TROUBLE DIAGNOSIS FOR "MASS AIR FLOW SEN" (DTC 12).....88
Mass Air Flow Sensor (MAFS).....88
TROUBLE DIAGNOSIS FOR "COOLANT TEMP SEN" (DTC 13).....94
Engine Coolant Temperature Sensor (ECTS).....94
TROUBLE DIAGNOSIS FOR "IGN SIGNAL-PRIMARY" (DTC 21).....98
Ignition Signal.....98
TROUBLE DIAGNOSIS FOR "OVER HEAT" (DTC 28).....105
Overheat.....105
TROUBLE DIAGNOSIS FOR "INT AIR TEMP SEN" (DTC 41).....108
Intake Air Temperature Sensor.....108

CONTENTS (Cont'd)

TROUBLE DIAGNOSIS FOR "THROTTLE POSI SEN" (DTC 43) 112
Throttle Position Sensor 112
TROUBLE DIAGNOSIS FOR NON-DETECTABLE ITEMS 117
Vehicle Speed Sensor (VSS) 117
Heated Oxygen Sensor (HO2S) - LHD Models - 122
Heated Oxygen Sensor Heater - LHD Models - 126
Idle Air Control Valve (IACV) - Auxiliary Air Control (AAC) Valve 130
Neutral Position Switch 135
EVAP Canister Purge Control Solenoid Valve 139
Injector 143
Start Signal 148
Fuel Pump 150
Power Steering Oil Pressure Switch 156
Swirl Control Valve Control Solenoid Valve 160
IACV-FICD Solenoid Valve 167
MIL & Data Link Connectors 171

NA

ENGINE AND EMISSION CONTROL OVERALL SYSTEM 173
Component Parts Location 173
System Diagram 174
Circuit Diagram 175
Vacuum Hose Drawing 176
CARBURETOR 177
Construction 177
Major Service Operation 179
Disassembling Carburetor Harness Connector 179
Checking and Adjusting Idle Speed, Ignition Timing and Mixture Ratio 180
Checking and Adjusting Idle-rpm, Ignition Timing and Mixture Ratio 181
Fuel Level 184
Automatic Choke 186
Fast Idle 188
Vacuum Break 189
Accelerator Pump 189
IACV-idle up Control 190
Fuel Cut Control System 193
Mixture By-pass Control System 195
ISC-FI Pot 198
MECHANICAL FUEL PUMP (MODELS WITHOUT POWER STEERING) 201
Fuel Pump 201
Operation 201
Fuel Pressure 201
ELECTRIC FUEL PUMP CONTROL SYSTEM (MODELS WITH POWER STEERING) 202
Description 202
Operation 202
Wiring Diagram - FPCM - 203
Inspection 204
FUEL RETURN CONTROL SYSTEM 206
Wiring Diagram - F/RTN - 206
Description 207
Operation 207
Inspection 207
IGNITION CONTROL SYSTEM 209
Wiring Diagram - IGN - 209
System Description 210
Component Parts Description 210
Component Parts Inspection 210
IGNITION CONTROL SYSTEM - Distributor 212
Disassembly 212
Distributor Component Check 212
EXHAUST EMISSION CONTROL SYSTEM 213
Boost Control Valve (BCV) 213
IDLE COMPENSATOR 214
Idle Compensator 214
Inspection 214
EVAPORATIVE EMISSION CONTROL SYSTEM 215
Description 215
Inspection 215
CRANKCASE EMISSION CONTROL SYSTEM 217
Description 217
Inspection 217

Z24S

ENGINE AND EMISSION CONTROL OVERALL SYSTEM 218
Component Parts Location 218
System Diagram 219
Circuit Diagram 220
Vacuum Hose Drawing 221
CARBURETOR 222
Construction 222
Major Service Operation 224
Disassembling Carburetor Harness Connector 224
Checking and Adjusting Idle Speed, Ignition Timing and Mixture Ratio 225
Fuel Level 229
Automatic Choke 231
Fast Idle 233
Vacuum Break 234
Accelerator Pump 234
Fuel Cut Control System 235
ISC-FI Pot 237
ELECTRIC FUEL PUMP 240
Description 240
Operation 240
Wiring Diagram - FPCM - 241

CONTENTS (Cont'd)

Inspection....242
EXHAUST EMISSION CONTROL SYSTEM....244
Boost Controlled Deceleration Device (BCDD)....244
IGNITION CONTROL SYSTEM....246
Wiring Diagram - IGN -....246
System Description....247
Component Parts Inspection....247
IGNITION CONTROL SYSTEM - Distributor....248
Disassembly....248
Distributor Component Check....248
IDLE COMPENSATOR....249
Idle Compensator....249
Inspection....249
EVAPORATIVE EMISSION CONTROL SYSTEM....250
Description....250
Inspection....250
CRANKCASE EMISSION CONTROL SYSTEM....252
Description....252
Inspection....252

QD & TD

INJECTION SYSTEM....253
Fuel System....253
INJECTION PUMP....255
Inspection....255
Removal....256
Installation and Adjustment....258
Disassembly....261
Load Timer Adjustment....261
Start Q Adjustment Lever....261
INJECTION NOZZLE....263
Removal and Installation....263
Disassembly....263
Inspection....264
Cleaning....264
Assembly....266
Test and Adjustment....266
FUEL SYSTEM CHECK....268
Bleeding Fuel System....268
Bleeding Fuel Filter....269
Checking Priming Pump....269
Checking Fuel Filter Switch....269
POSITIVE CRANKCASE VENTILATION....270
Description....270
Inspection....270
QUICK-GLOW SYSTEM....271
Component Parts Location....271
Circuit Diagram....272
Description....274
Wiring Diagram....276
Glow Control Unit Circuit Inspection (For Cold Areas)....288
Glow Control Unit Circuit Inspection (Except for Cold Areas)....293
Component Inspection....295
SOLENOID TIMER....297
Description....297
Operation....297
Wiring Diagram....299
Inspection....301
FUEL CUT SYSTEM....303
Wiring Diagram....303

KA

SERVICE DATA AND SPECIFICATIONS (SDS)....304
General Specifications....304
Inspection and Adjustment....304

NA

SERVICE DATA AND SPECIFICATIONS (SDS)....305
General Specifications....305
Inspection and Adjustment....306

Z24S

SERVICE DATA AND SPECIFICATIONS (SDS)....307
General Specifications....307
Inspection and Adjustment....307

QD & TD

SERVICE DATA AND SPECIFICATIONS (SDS)....309
VE-type Injection Pump....309
Injection Nozzle....310
Injection Pump Calibration Standard....311

When you read wiring diagrams:
- **Read GI section, "HOW TO READ WIRING DIAGRAMS".**
- **See EL section, "POWER SUPPLY ROUTING" for power distribution circuit.**

When you perform trouble diagnoses, read GI section, "HOW TO FOLLOW FLOW CHART IN TROUBLE DIAGNOSES" and "HOW TO PERFORM EFFICIENT DIAGNOSIS FOR AN ELECTRICAL INCIDENT".

Alphabetical & Numerical Index for DTC (KA engine)

ALPHABETICAL INDEX FOR DTC

X: Applicable
—: Not applicable

Items (CONSULT screen terms)	DTC	MIL illumination	Reference page
CAMSHAFT POSI SEN	11	—	EC-81
COOLANT TEMP SEN	13	X	EC-94
IGN SIGNAL-PRIMARY	21	—	EC-98
INT AIR TEMP SEN	41	—	EC-108
MASS AIR FLOW SEN	12	—	EC-88
NO SELF DIAGNOSTIC FAILURE INDICATED	**55**	**—**	**—**
OVER HEAT	28	X	EC-105
THROTTLE POSI SEN	43	—	EC-112

NUMERICAL INDEX FOR DTC

X: Applicable
—: Not applicable

DTC	MIL illumination	Items (CONSULT screen terms)	Reference page
11	—	CAMSHAFT POSI SEN	EC-81
12	—	MASS AIR FLOW SEN	EC-88
13	X	COOLANT TEMP SEN	EC-94
21	—	IGN SIGNAL-PRIMARY	EC-98
28	X	OVER HEAT	EC-105
41	—	INT AIR TEMP SEN	EC-108
43	—	THROTTLE POSI SEN	EC-112
55	**—**	**NO SELF DIAGNOSTIC FAILURE INDICATED**	—

Special Service Tools

Tool number Tool name	Description	Engine application	
		NA	Z
KV10108300 Idle adjusting screwdriver	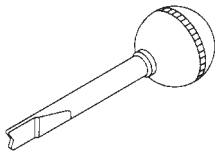 NT270	X	X

X: Applicable

FOR DIESEL ENGINE INJECTION PUMP

Tool number Tool name	Description		Engine application	
			QD	TD
KV11229352 Measuring device ① KV11229350 Holder ② KV11229360 Nut ③ KV11229370 Pin ④ KV11254410 Dial gauge	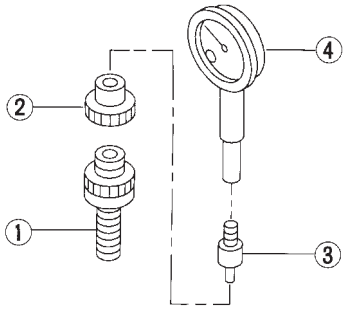 NT570	Measuring plunger lift	X	X
KV11103000 Pulley puller	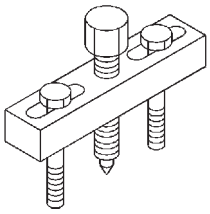 NT676	Removing injection pump drive gear	X	X
KV10111100 Seal cutter	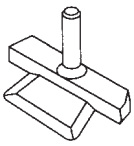 NT046	Removing injection pump drive gear cover	X	X
WS39930000 Tube presser	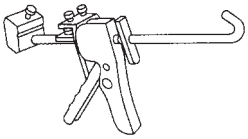 NT052	Pressing the tube of liquid gasket	X	X

X: Applicable

Special Service Tools (Cont'd)

FOR DIESEL ENGINE INJECTION NOZZLE

Tool number Tool name	Description	Engine application	
		QD	TD
KV11289004 Nozzle cleaning kit ① KV11290012 Box ② KV11290110 Brush ③ KV11290122 Nozzle oil sump scraper ④ KV11290140 Nozzle needle tip ⑤ KV11290150 Nozzle seat scraper ⑥ KV11290210 Nozzle holder ⑦ KV11290220 Nozzle hole cleaning needle	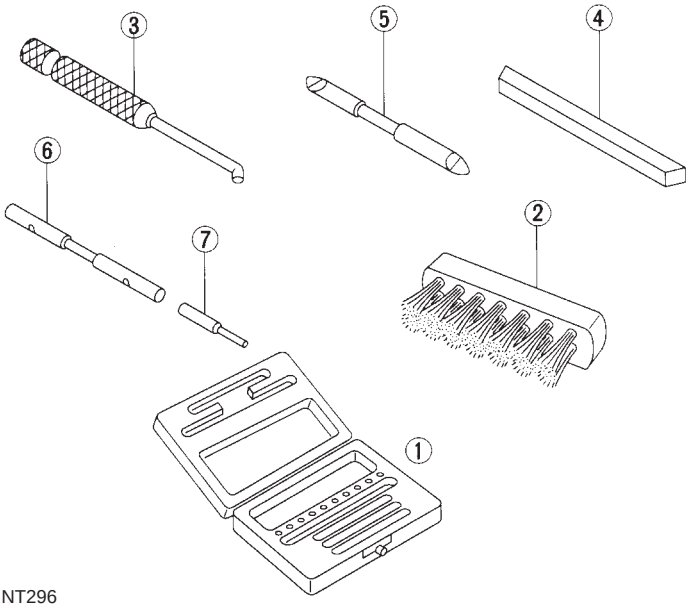 NT296	X	X
KV11292210 Nozzle cleaning device	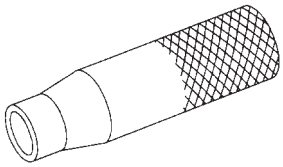 NT293	X	X
KV11290632 Nozzle oil sump scraper	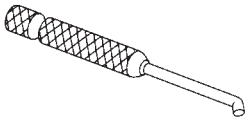 NT294	X	X
KV11290620 Nozzle seat scraper	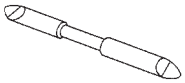 NT295	X	X

X: Applicable

Commercial Service Tool

FOR KA ENGINE MODELS

Tool name	Description
Fuel filler cap adapter	Checking fuel tank vacuum relief valve opening pressure 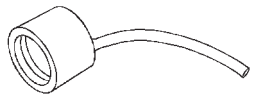 NT653

Supplemental Restraint System (SRS) "AIR BAG" (4WD models)

The Supplemental Restraint System "Air Bag", used along with a seat belt, helps to reduce the risk or severity of injury to the driver in a frontal collision. The Supplemental Restraint System consists of an air bag module (located in the center of the steering wheel), a diagnosis sensor unit, warning lamp, wiring harness and spiral cable. Information necessary to service the system safely is included in the **RS section** of this Service Manual.

WARNING:

- **To avoid rendering the SRS inoperative, which could increase the risk of personal injury or death in the event of a collision which would result in air bag inflation, all maintenance must be performed by an authorized NISSAN dealer.**
- **Improper maintenance, including incorrect removal and installation of the SRS, can lead to personal injury caused by unintentional activation of the system.**
- **Do not use electrical test equipment on any circuit related to the SRS unless instructed to in this Service Manual. SRS wiring harnesses are covered with yellow insulation either just before the harness connectors or for the complete harness, for easy identification.**

Supplemental Restraint System (SRS) "AIR BAG" (2WD models)

The Supplemental Restraint System "Air Bag", used along with a seat belt, helps to reduce the risk or severity of injury to the driver in a frontal collision. The Supplemental Restraint System consists of an air bag module (located in the center of the steering wheel), a diagnosis sensor unit, warning lamp, wiring harness and spiral cable. Information necessary to service the system safely is included in the **RS section** of this Service Manual.

WARNING:

- **To avoid rendering the SRS inoperative, which could increase the risk of personal injury or death in the event of a collision which would result in air bag inflation, all maintenance must be performed by an authorized NISSAN dealer.**
- **Improper maintenance, including incorrect removal and installation of the SRS, can lead to personal injury caused by unintentional activation of the system.**
- **Do not use electrical test equipment on any circuit related to the SRS.**

Engine Fuel & Emission Control System

FUEL PUMP
- Do not operate fuel pump when there is no fuel in lines.
- Tighten fuel hose clamps to the specified torque. (Refer to MA section.)

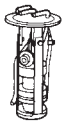

BATTERY
- Always use a 12 volt battery as power source.
- Do not attempt to disconnect battery cables while engine is running.

WIRELESS EQUIPMENT
- When installing CB ham radio or a mobile phone, be sure to observe the following as it may adversely affect electronic control systems depending on its installation location.

1) Keep the antenna as far away as possible from the electronic control units.
2) Keep the antenna feeder line more than 20 cm (7.9 in) away from the harness of electronic controls.
   Do not let them run parallel for a long distance.
3) Adjust the antenna and feeder line so that the standing-wave ratio can be kept smaller.
4) Be sure to ground the radio to vehicle body.

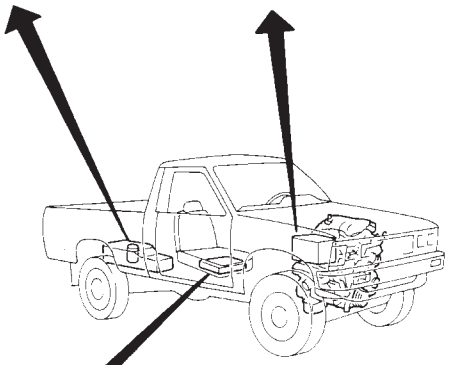

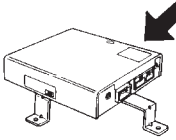

ECM
- Do not disassemble ECCS control module (ECM).
- Do not turn diagnosis mode selector forcibly.
- If a battery terminal is disconnected, the memory will return to the ECM value.
  The ECCS will now start to self-control at its initial value. Engine operation can vary slightly when the terminal is disconnected. However, this is not an indication of a problem. Do not replace parts because of a slight variation.

WHEN STARTING
- Do not depress accelerator pedal when starting.
- Immediately after starting, do not rev up engine unnecessarily.
- Do not rev up engine just prior to shutdown.

ECCS PARTS HANDLING
- Handle mass air flow sensor carefully to avoid damage.
- Do not disassemble mass air flow sensor.
- Do not clean mass air flow sensor with any type of detergent.
- Do not disassemble IACV-AAC valve.
- Even a slight leak in the air intake system can cause serious problems.
- Do not shock or jar the camshaft position sensor.

ECCS HARNESS HANDLING
- Securely connect ECCS harness connectors.
  A poor connection can cause an extremely high (surge) voltage to develop in coil and condenser, thus resulting in damage to ICs.
- Keep ECCS harness at least 10 cm (3.9 in) away from adjacent harnesses, to prevent an ECCS system malfunction due to receiving external noise.
- Keep ECM parts and harnesses dry.
- Before removing parts, turn off ignition switch and then disconnect battery ground cable.

SEF903MD

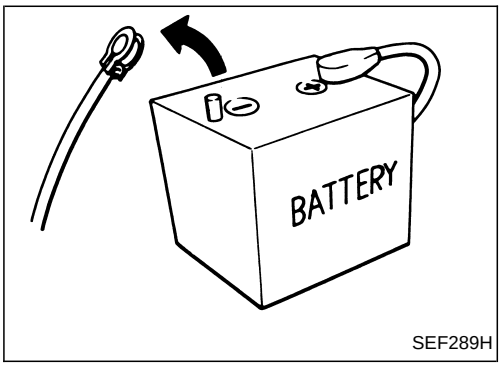

SEF289H

Precautions

- **Before connecting or disconnecting the ECM harness connector, turn ignition switch OFF and disconnect negative battery terminal. Failure to do so may damage the ECM. Because battery voltage is applied to ECM even if ignition switch is turned off.**

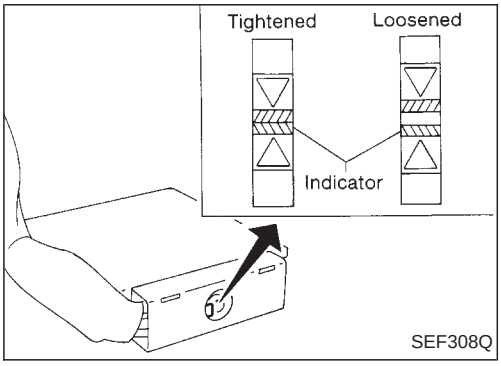

SEF308Q

- **When connecting ECM harness connector, tighten securing bolt until the gap between the orange indicators disappears.**
  : 3.0 - 5.0 N·m (0.3 - 0.5 kg-m, 26 - 43 in-lb)

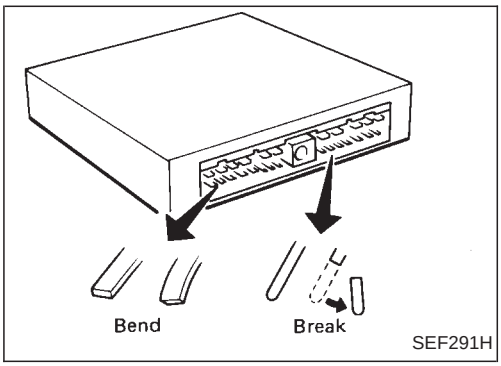

SEF291H

- **When connecting or disconnecting pin connectors into or from ECM, take care not to damage pin terminals (bend or break).**
  Make sure that there are not any bends or breaks on ECM pin terminal, when connecting pin connectors.

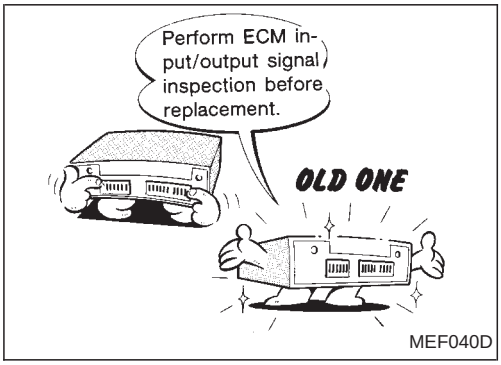

MEF040D

- **Before replacing ECM, perform ECM input/output signal inspection and make sure whether ECM functions properly or not. (See page EC-68.)**

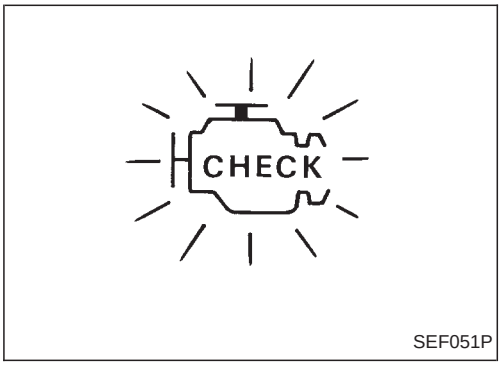

SEF051P

- **After performing each TROUBLE DIAGNOSIS, perform "OVERALL FUNCTION CHECK" or "DTC (Diagnostic Trouble Code) CONFIRMATION PROCEDURE".**
  The DTC should not be displayed in the "DTC CONFIRMATION PROCEDURE" if the repair is completed. The "OVERALL FUNCTION CHECK" should be a good result if the repair is completed.

Precautions (Cont'd)

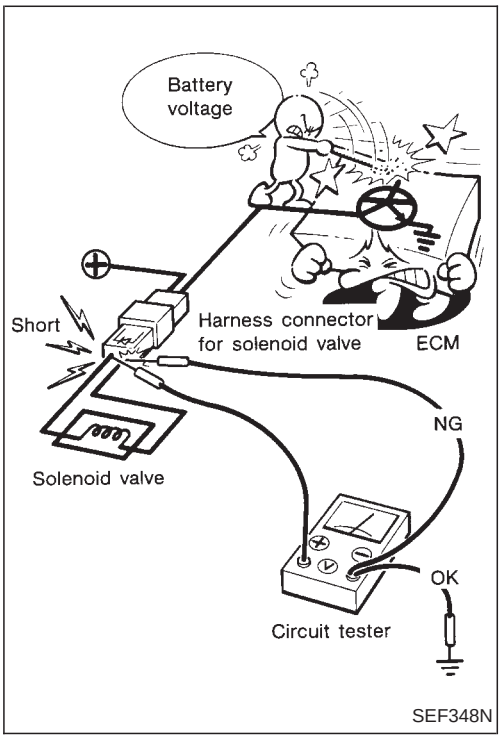

- **When measuring ECM signals with a circuit tester, never bring the two tester probes into contact.**
  Accidental contact of probes will cause a short circuit and damage the ECM power transistor.

Circuit Diagram

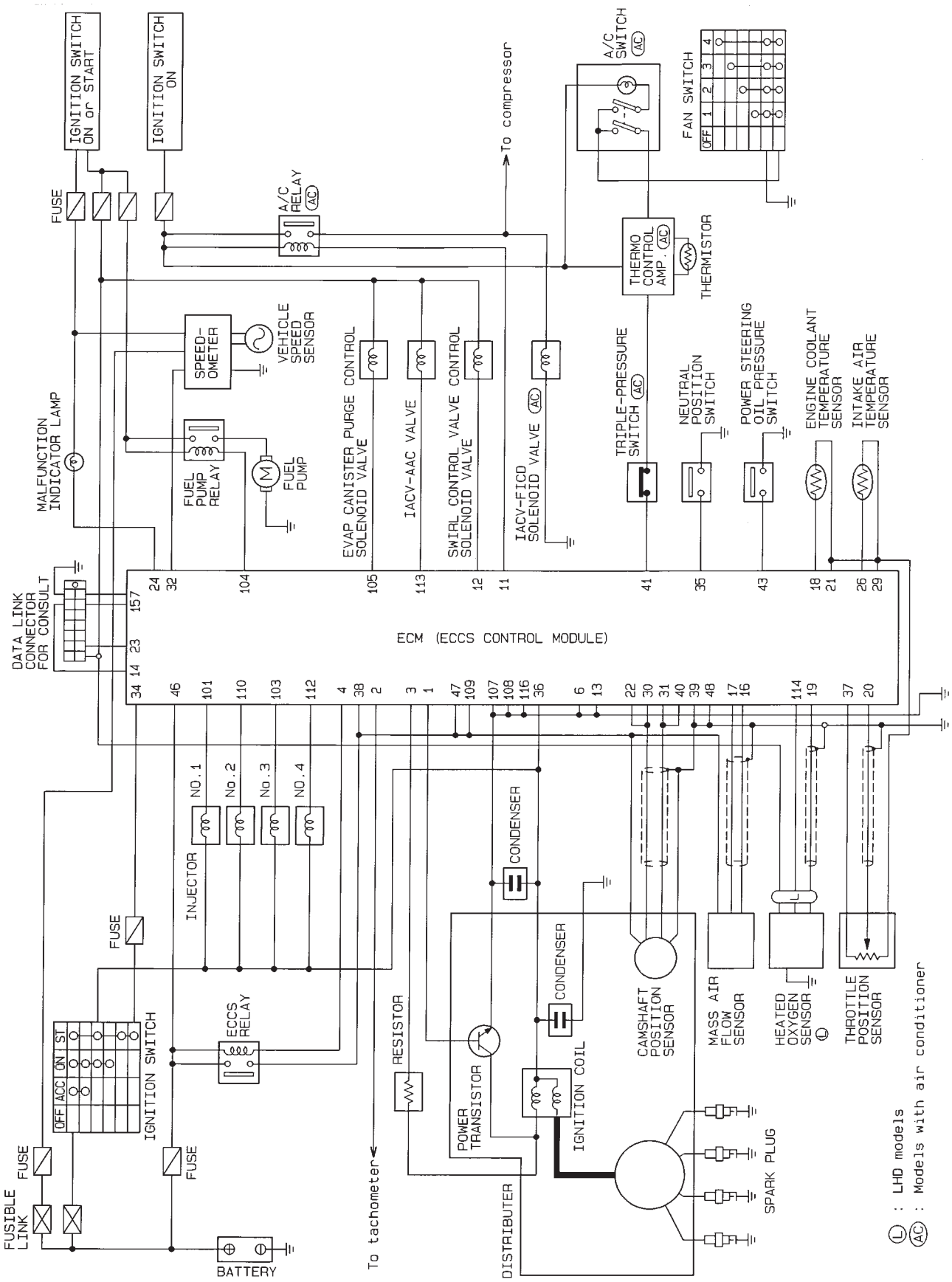

HEC334

System Diagram

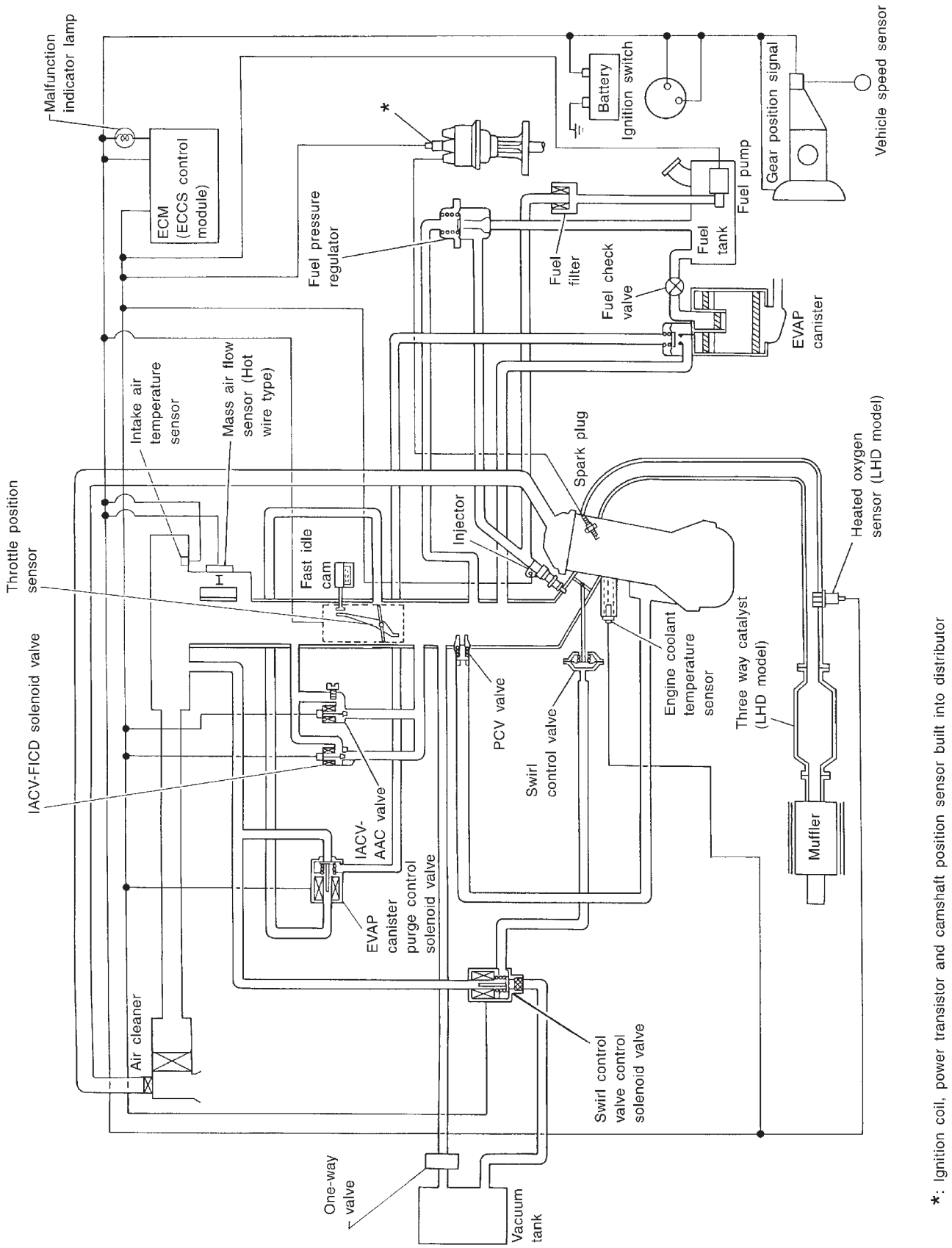

*: Ignition coil, power transistor and camshaft position sensor built into distributor

SEF038U

ECCS Component Parts Location

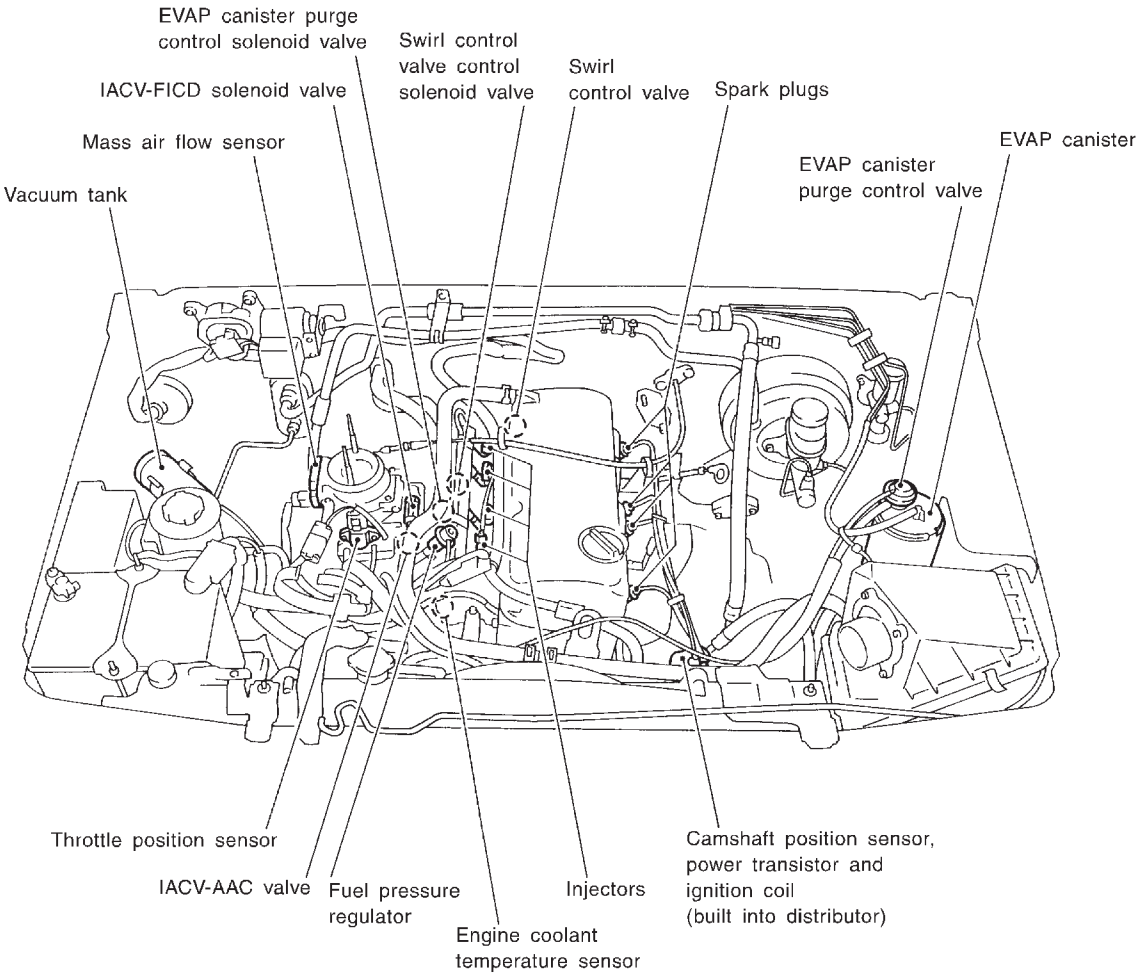

SEF039U

ECCS Component Parts Location (Cont'd)

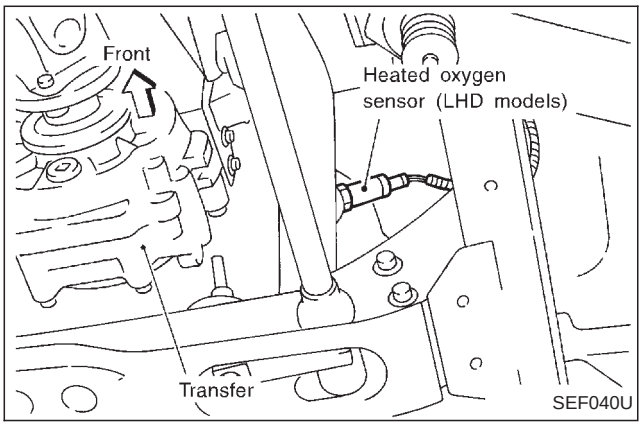

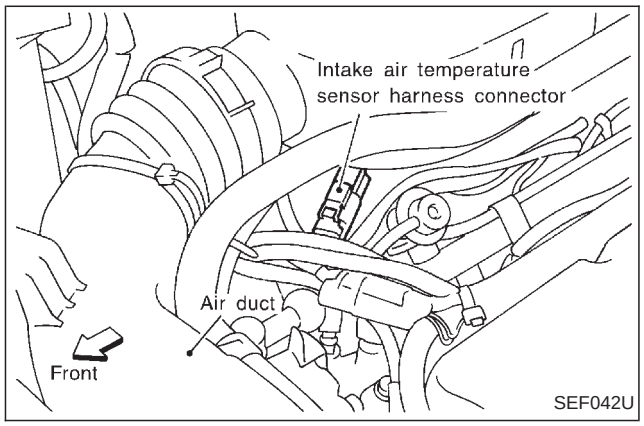

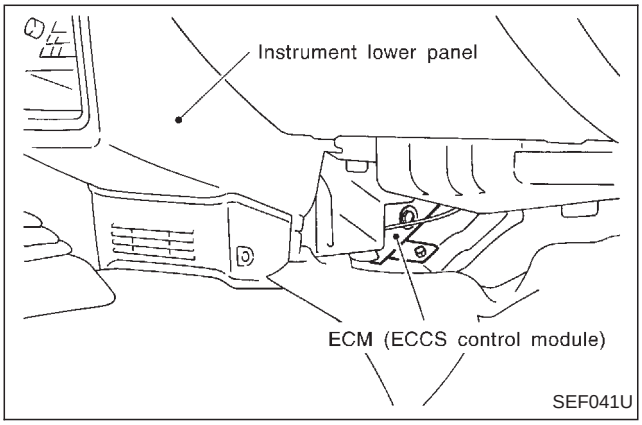

Vacuum Hose Drawing

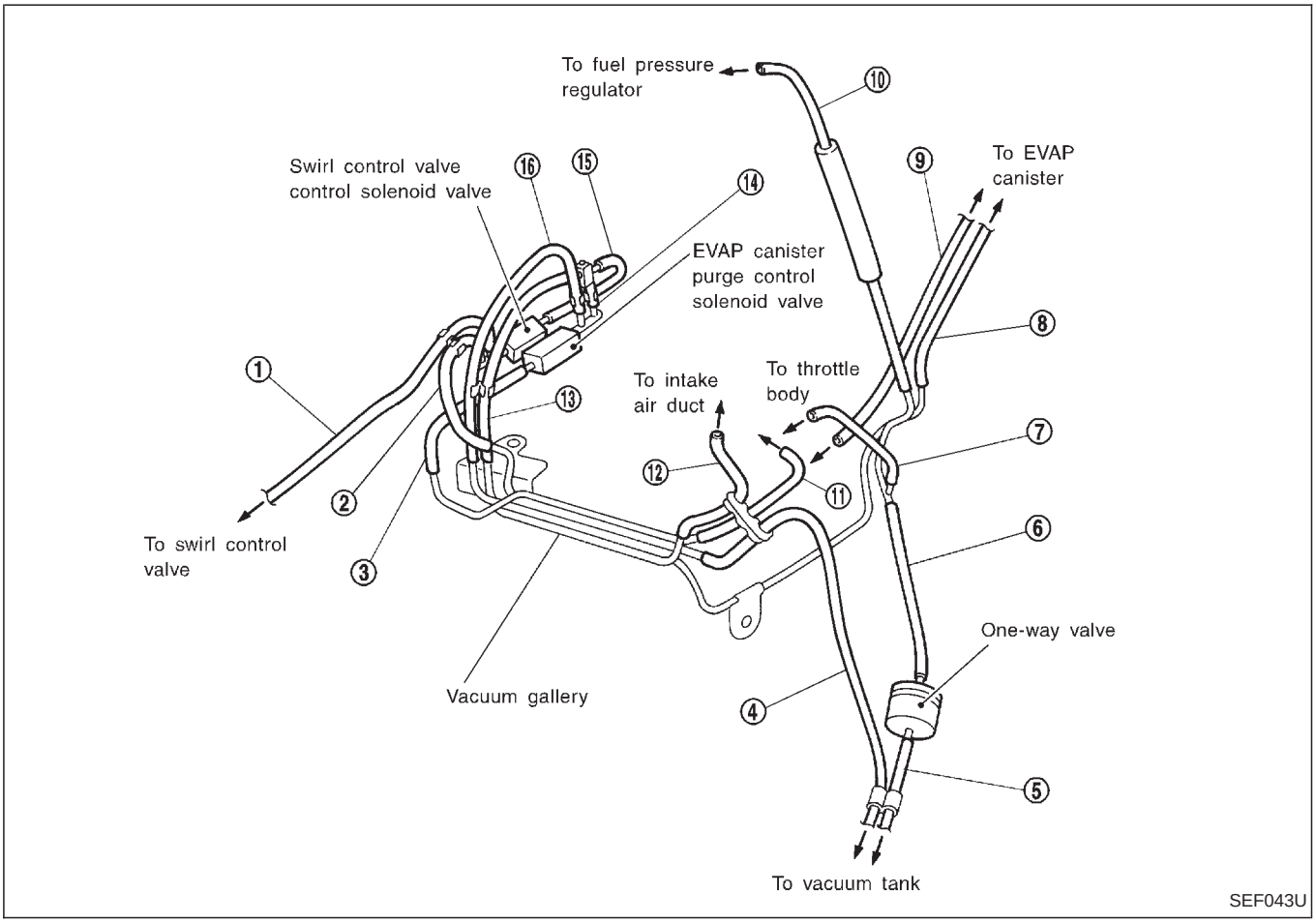

① Swirl control valve control solenoid valve to swirl control valve
② Swirl control valve control solenoid valve to vacuum gallery
③ EVAP canister purge control solenoid valve to vacuum gallery
④ Vacuum tank to vacuum gallery
⑤ Vacuum tank to one-way valve
⑥ One-way valve to vacuum gallery
⑦ Throttle body to vacuum gallery
⑧ EVAP canister to vacuum gallery
⑨ EVAP canister to throttle body
⑩ Fuel pressure regulator to vacuum gallery
⑪ Throttle body to vacuum gallery
⑫ Intake air duct to vacuum gallery
⑬ Vacuum gallery to 3-way connector
⑭ EVAP canister purge control solenoid valve to 3-way connector
⑮ Swirl control valve control solenoid valve to 3-way connector
⑯ EVAP canister purge control solenoid valve to vacuum gallery

Refer to “System Diagram”, EC-10, for vacuum control system.

System Chart

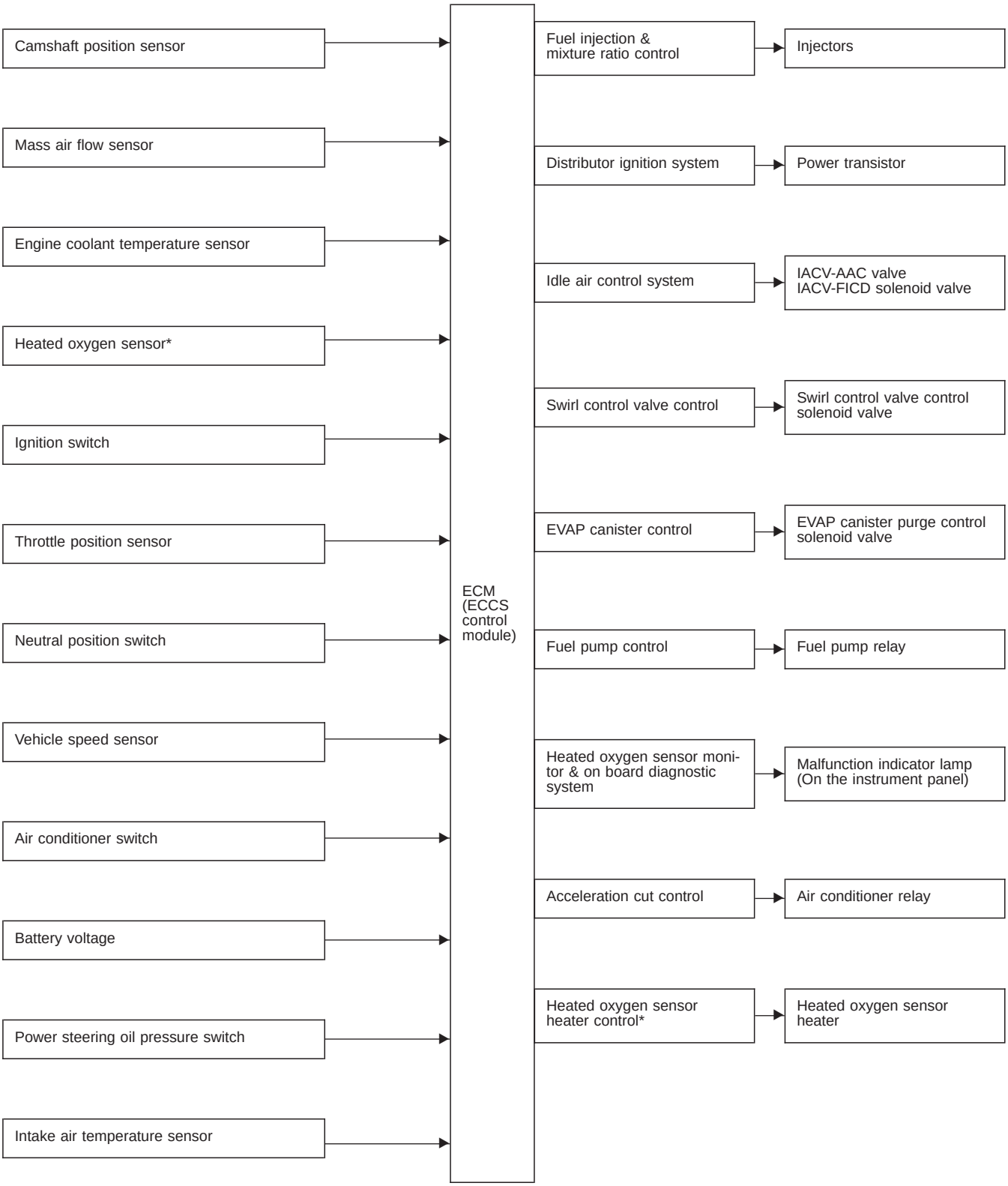

*: LHD models

Multiport Fuel Injection (MFI) System

INPUT/OUTPUT SIGNAL LINE

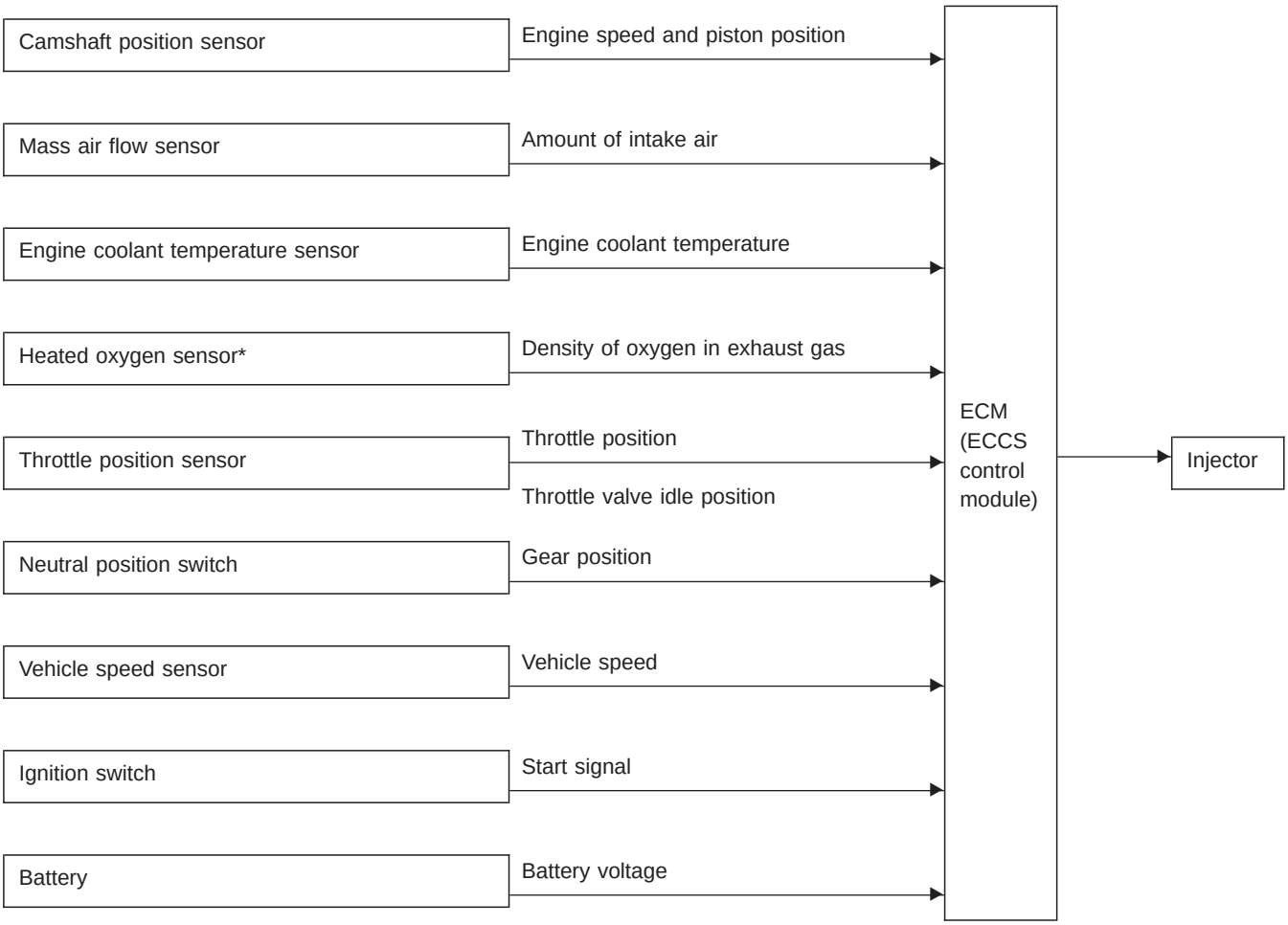

*: LHD models

BASIC MULTIPORT FUEL INJECTION SYSTEM

The amount of fuel injected from the fuel injector is determined by the ECM. The ECM controls the length of time the valve remains open (injection pulse duration). The amount of fuel injected is a program value in the ECM memory. The program value is preset by engine operating conditions. These conditions are determined by input signals (for engine speed and intake air) from both the camshaft position sensor and the mass air flow sensor.

VARIOUS FUEL INJECTION INCREASE/DECREASE COMPENSATION

The amount of fuel injected is compensated for to improve engine performance. This will be made under various operating conditions as listed below.

<Fuel increase>

- During warm-up
- When starting the engine
- During acceleration
- Hot-engine operation
- High-load, high-speed operation
- When swirl control valve operates

<Fuel decrease>

- During deceleration
- During high-engine speed operation
- Extremely high-engine coolant temperature

Multiport Fuel Injection (MFI) System (Cont'd)

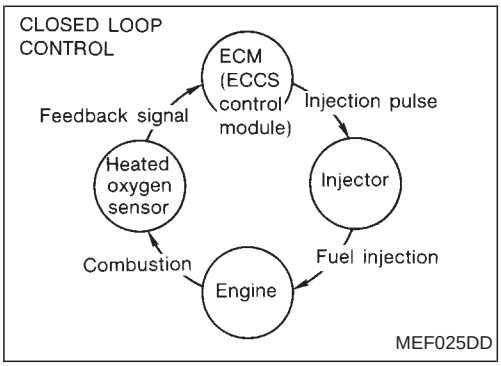

MIXTURE RATIO FEEDBACK CONTROL

The mixture ratio feedback system provides the best air-fuel mixture ratio for driveability and emission control. The three way catalyst can then better reduce CO, HC and NOx emissions. This system uses a heated oxygen sensor in the exhaust manifold to monitor if the engine is rich or lean. The ECM adjusts the injection pulse width according to the sensor voltage signal. For more information about heated oxygen sensor, refer to page EC-122. This maintains the mixture ratio within the range of stoichiometric (ideal air-fuel mixture).
This stage is referred to as the closed loop control condition.

OPEN LOOP CONTROL

The open loop system condition refers to when the ECM detects any of the following conditions. Feedback control stops in order to maintain stabilized fuel combustion.

- Deceleration and acceleration
- High-load, high-speed operation
- Engine idling
- Malfunction of heated oxygen sensor or its circuit
- Insufficient activation of heated oxygen sensor at low engine coolant temperature
- High-engine coolant temperature
- During warm-up
- When starting the engine

MIXTURE RATIO SELF-LEARNING CONTROL

The mixture ratio feedback control system monitors the mixture ratio signal transmitted from the heated oxygen sensor. This feedback signal is then sent to the ECM. The ECM controls the basic mixture ratio as close to the theoretical mixture ratio as possible. However, the basic mixture ratio is not necessarily controlled as originally designed. Both Manufacturing differences (i.e. mass air flow sensor hot wire) and characteristic changes during operation (i.e. injector clogging) directly affect mixture ratio.
Accordingly, the difference between the basic and theoretical mixture ratios is monitored in this system. This is then computed in terms of "injection pulse duration" to automatically compensate for the difference between the two ratios.

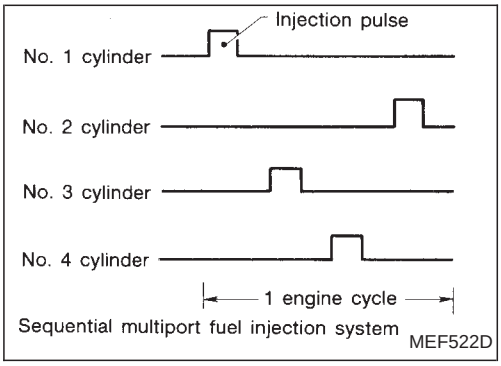

FUEL INJECTION SYSTEM

Two types of systems are used.

Sequential multiport fuel injection system

Fuel is injected into each cylinder during each engine cycle according to the firing order. This system is used when the engine is running.

Multiport Fuel Injection (MFI) System (Cont'd)

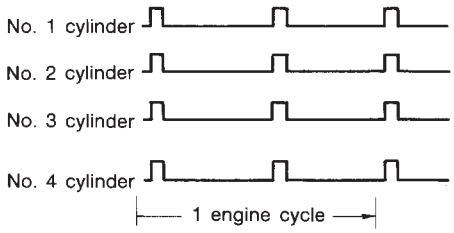

Simultaneous multiport fuel injection system

MEF523D

Simultaneous multiport fuel injection system

Fuel is injected simultaneously into all four cylinders twice each engine cycle. In other words, pulse signals of the same width are simultaneously transmitted from the ECM.
The four injectors will then receive the signals two times for each engine cycle.
This system is used when the engine is being started and/or if the fail-safe mode (CPU) is operating.

FUEL SHUT-OFF

Fuel to each cylinder is cut off during deceleration or operation of the engine at excessively high speeds.

Distributor Ignition (DI) System

INPUT/OUTPUT SIGNAL LINE

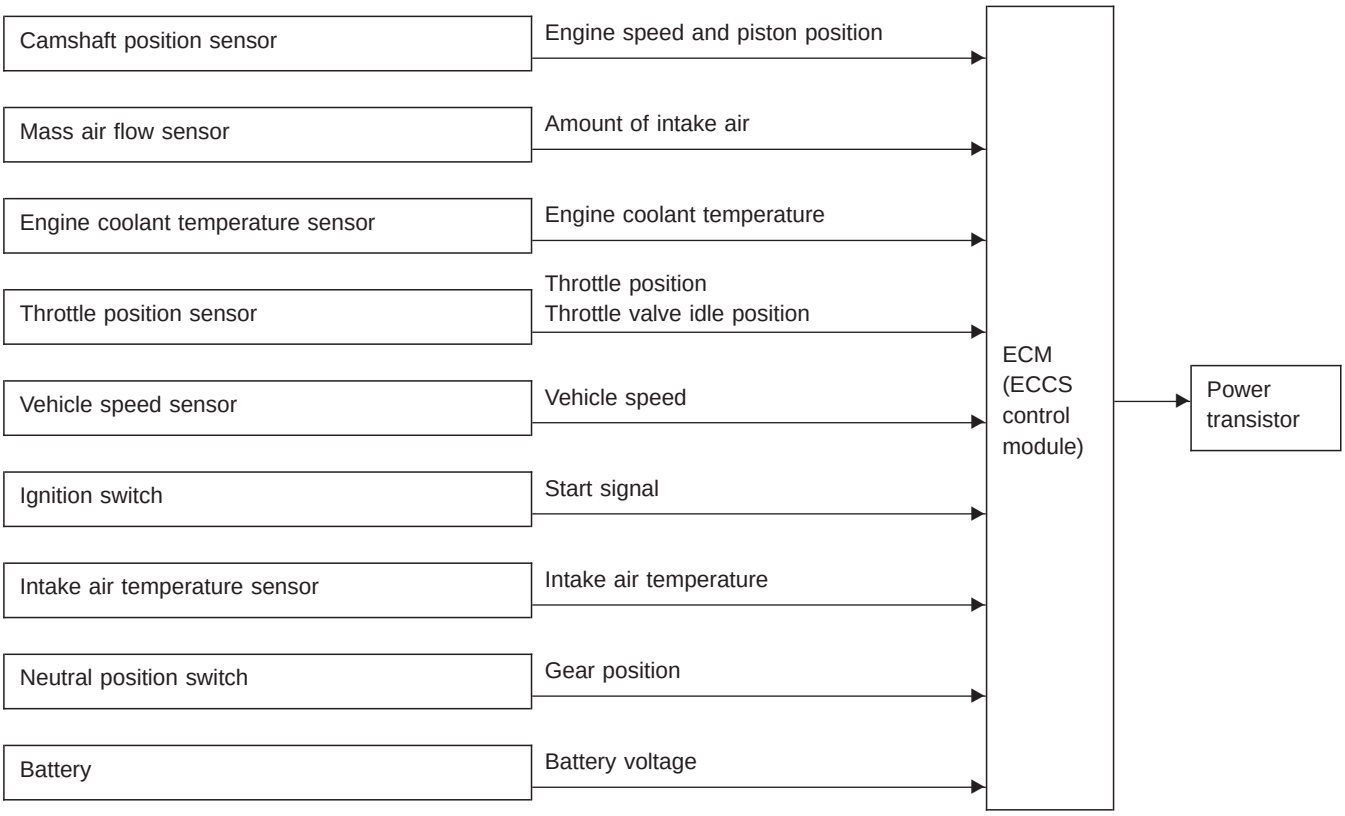

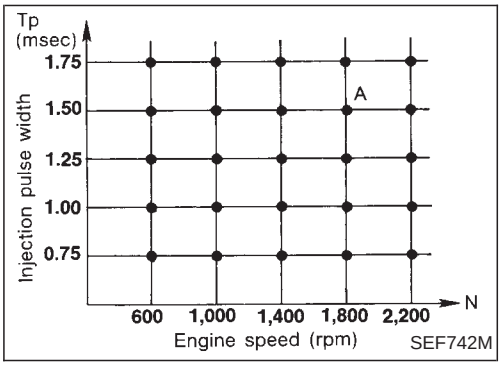

SYSTEM DESCRIPTION

The ignition timing is controlled by the ECM to maintain the best air-fuel ratio for every running condition of the engine.
The ignition timing data is stored in the ECM. This data forms the map shown left.
The ECM detects information such as the injection pulse width and camshaft position sensor signal. Responding to this information, ignition signals are transmitted to the power transistor.

e.g. N: 1,800 rpm, Tp: 1.50 msec
A °BTDC

During the following conditions, the ignition timing is revised by the ECM according to the other data stored in the ECM.

1 At starting
2 During warm-up
3 At idle
4 When swirl control valve operates
5 Hot-engine operation
6 At acceleration

Air Conditioning Cut Control

INPUT/OUTPUT SIGNAL LINE

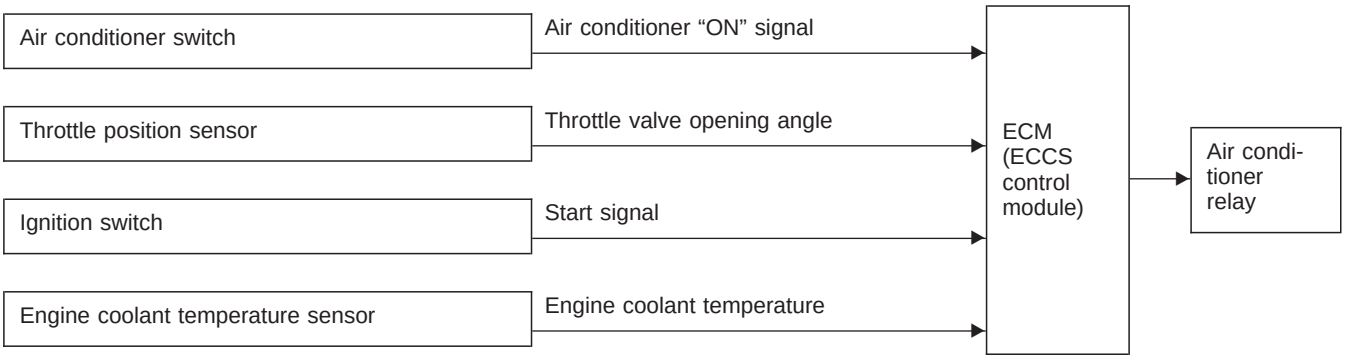

SYSTEM DESCRIPTION

This system improves engine operation when the air conditioner is used.
Under the following conditions, the air conditioner is turned off.

- When the accelerator pedal is fully depressed
- When cranking the engine
- When the engine coolant temperature becomes excessively high

Fuel Cut Control (at no load & high engine speed)

INPUT/OUTPUT SIGNAL LINE

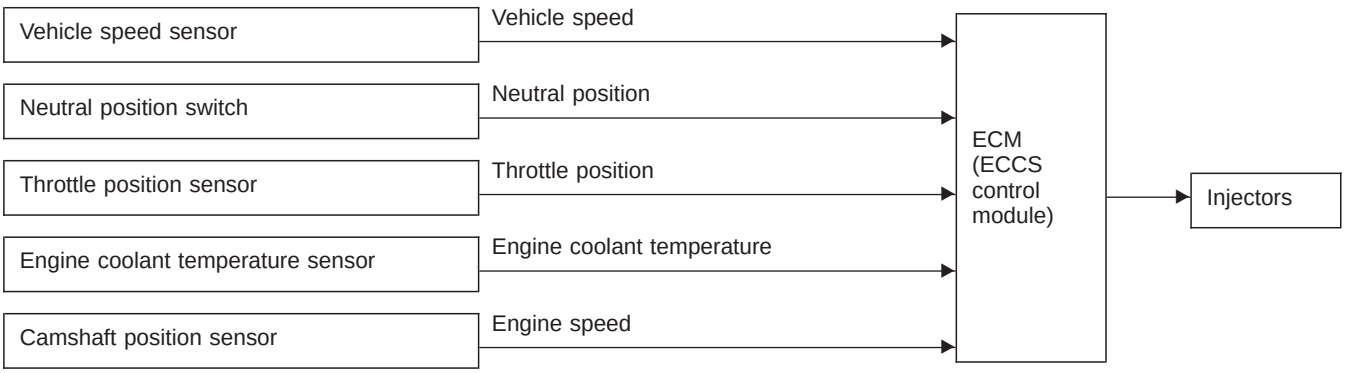

If the engine speed is above 3,500 rpm with no load (for example, in neutral and engine speed over 3,500 rpm) fuel will be cut off after some time. The exact time when the fuel is cut off varies based on engine speed.
Fuel cut will operate until the engine speed reaches 1,500 rpm, then fuel cut is cancelled.
NOTE:
This function is different than deceleration control listed under multiport fuel injection on EC-15.

Description

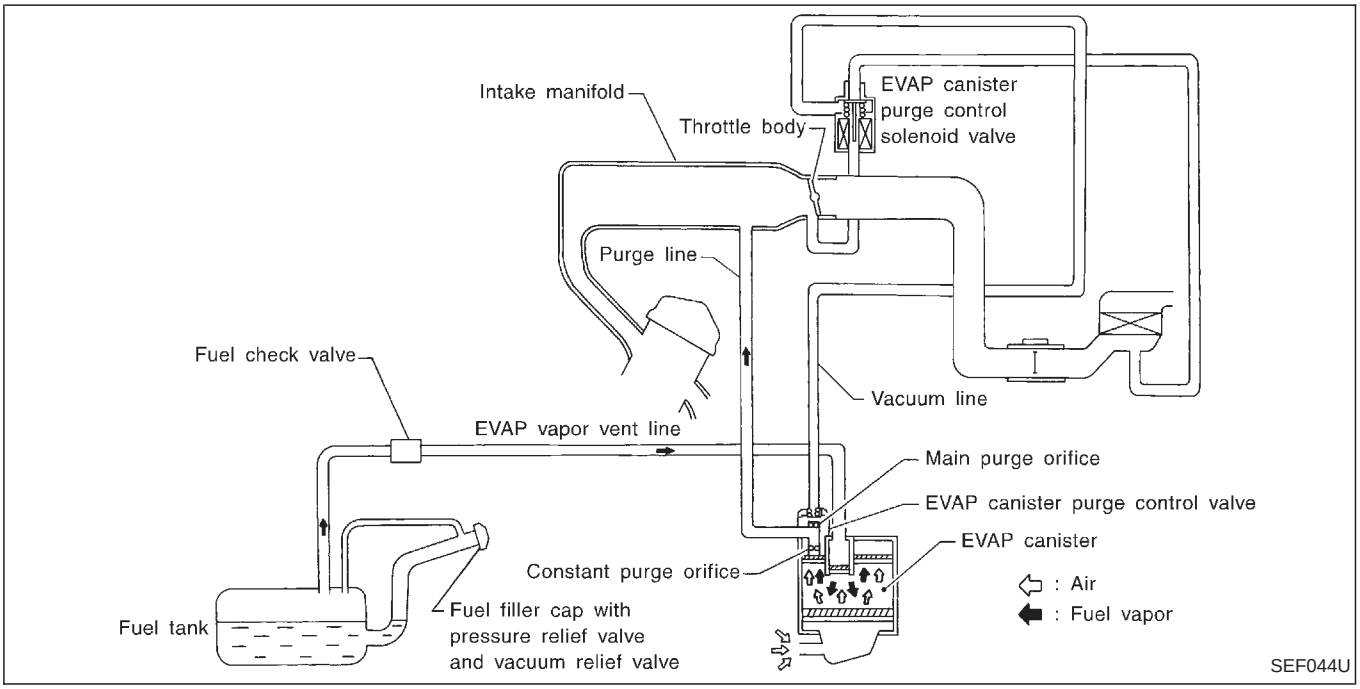

The evaporative emission system is used to reduce hydrocarbons emitted into the atmosphere from the fuel system. This reduction of hydrocarbons is accomplished by activated charcoals in the EVAP canister.

The fuel vapor from sealed fuel tank is led into the EVAP canister when the engine is off. The fuel vapor is then stored in the EVAP canister. The EVAP canister retains the fuel vapor until the EVAP canister is purged by air.

When the engine is running, the air is drawn through the bottom of the EVAP canister. The fuel vapor will then be led to the intake manifold.

When the engine runs at idle, the EVAP canister purge control valve is closed. Only a small amount of vapor flows into the intake manifold through the constant purge orifice.

As the engine speed increases and the throttle vacuum rises, the EVAP canister purge control valve opens. The vapor is sucked through both main purge and constant purge orifices.

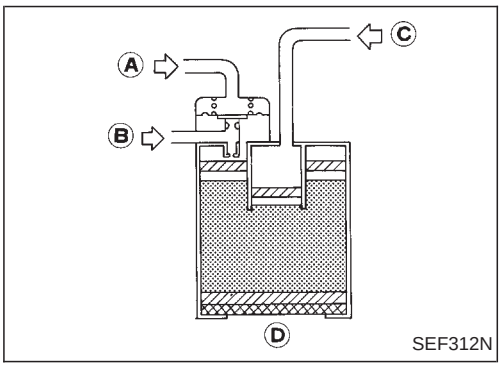

Inspection

EVAP CANISTER

Check EVAP canister as follows:

1. Blow air in port Ⓐ and check that there is no leakage.
2. Apply vacuum to port Ⓐ. [Approximately −13.3 to −20.0 kPa (−133 to −200 mbar, −100 to −150 mmHg, −3.94 to −5.91 inHg)]
3. Cover port Ⓓ by hand.
4. Blow air in port Ⓒ and check that it flows freely out of port Ⓑ.

Inspection (Cont'd)

FUEL CHECK VALVE

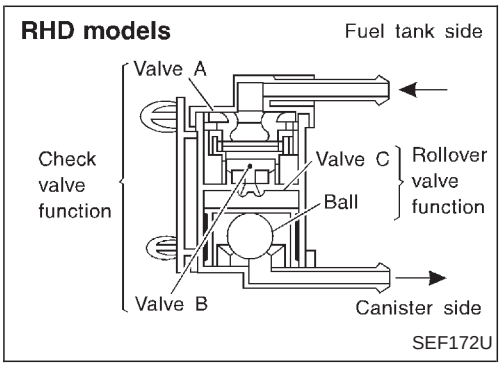

1. Blow air through connector on fuel tank side.
   A considerable resistance should be felt and a portion of air flow should be directed toward the EVAP canister side.
2. Blow air through connector on EVAP canister side.
   Air flow should be smoothly directed toward fuel tank side.
3. If fuel check valve is suspected of not properly functioning in steps 1 and 2 above, replace it.

Rollover valve operation (RHD models only)

Ensure that continuity of air passage does not exist when the installed rollover valve is tilted to 90° or 180°.

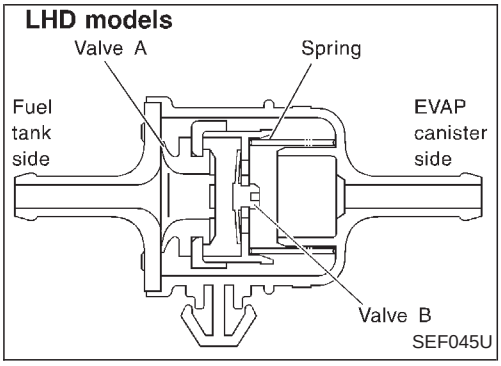

FUEL TANK VACUUM RELIEF VALVE

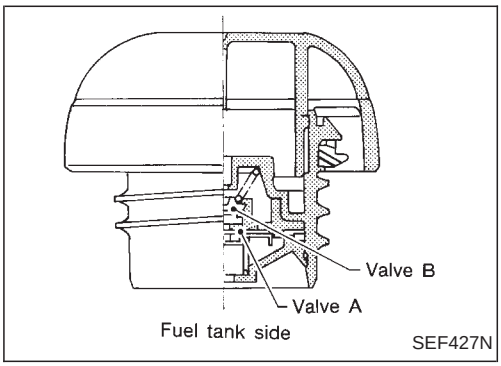

1. Wipe clean valve housing.
2. Check valve opening pressure and vacuum.
   Pressure:
   15.3 - 20.0 kPa (0.1530 - 0.2001 bar, 0.156 - 0.204 kg/cm^2, 2.22 - 2.90 psi)
   Vacuum:
   −6.0 to −3.3 kPa (−0.0598 to −0.0333 bar, −0.061 to −0.034 kg/cm^2, −0.87 to −0.48 psi)
3. If out of specification, replace fuel filler cap as an assembly.

CAUTION:
Use only a genuine fuel filler cap as a replacement.

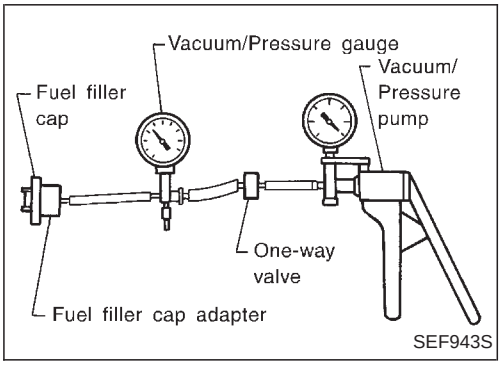

EVAP CANISTER PURGE CONTROL SOLENOID VALVE

Refer to EC-139.

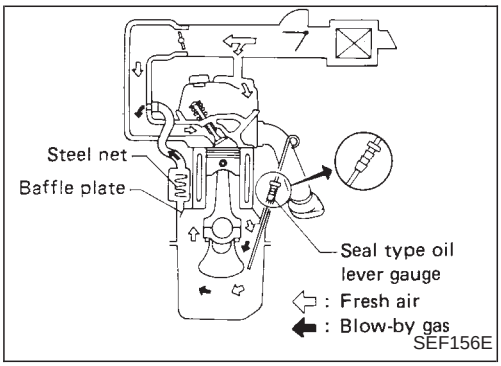

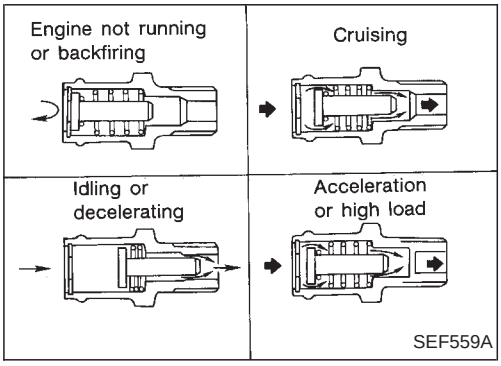

Description

This system returns blow-by gas to the intake manifold collector.
The positive crankcase ventilation (PCV) valve is provided to conduct crankcase blow-by gas to the intake manifold.
During partial throttle operation of the engine, the intake manifold sucks the blow-by gas through the PCV valve.
Normally, the capacity of the valve is sufficient to handle any blow-by and a small amount of ventilating air.
The ventilating air is then drawn from the air duct into the crankcase. In this process the air passes through the hose connecting air inlet tubes to the rocker cover.
Under full-throttle condition, the manifold vacuum is insufficient to draw the blow-by flow through the valve. The flow goes through the hose connection in the reverse direction.
On vehicles with an excessively high blow-by, the valve does not meet the requirement. This is because some of the flow will go through the hose connection to the intake collector under all conditions.

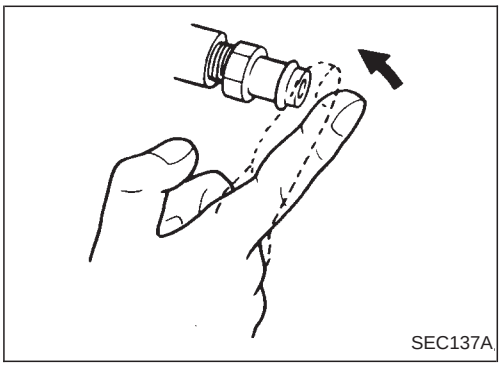

Inspection

PCV (Positive Crankcase Ventilation) VALVE

With engine running at idle, remove PCV valve from breather separator. A properly working valve makes a hissing noise as air passes through it. A strong vacuum should be felt immediately when a finger is placed over the valve inlet.

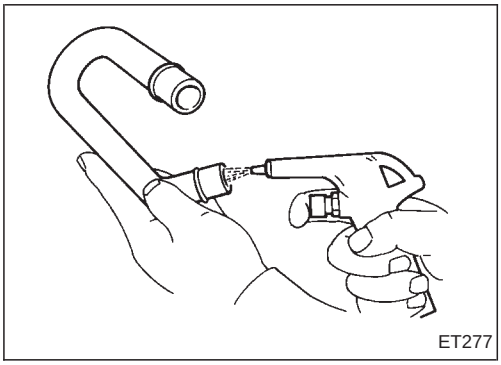

PCV HOSE

1. Check hoses and hose connections for leaks.
2. Disconnect all hoses and clean with compressed air. If any hose cannot be freed of obstructions, replace.

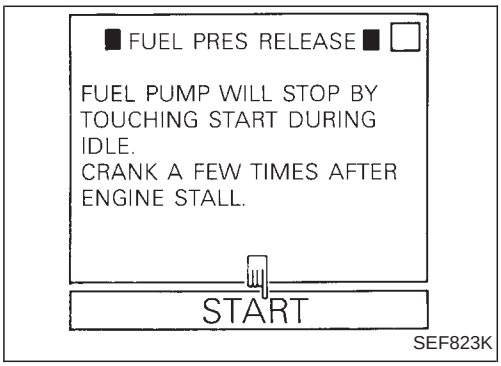

Fuel Pressure Release

Before disconnecting fuel line, release fuel pressure from fuel line to eliminate danger.

1. Start engine.
2. Perform “FUEL PRESSURE RELEASE” in “WORK SUPPORT” mode with CONSULT.
   (Touch “START” and after engine stalls, crank it two or three times to release all fuel pressure.)
3. Turn ignition switch off.

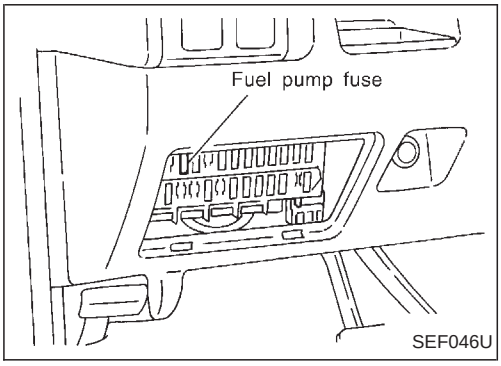

1. Remove fuse for fuel pump.
2. Start engine.
3. After engine stalls, crank it two or three times to release all fuel pressure.
4. Turn ignition switch off and reconnect fuel pump fuse.

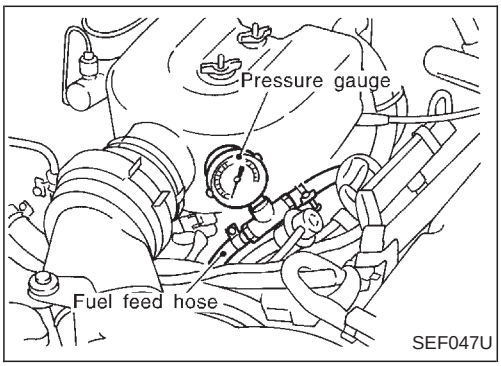

Fuel Pressure Check

- **When reconnecting fuel line, always use new clamps.**
- **Make sure that clamp screw does not contact adjacent parts.**
- **Use a torque driver to tighten clamps.**
- **Use Pressure Gauge to check fuel pressure.**

1. Release fuel pressure to zero, refer to above.
2. Disconnect fuel hose between fuel filter and fuel tube (engine side).
3. Install pressure gauge between fuel filter and fuel tube.
4. Start engine and check for fuel leakage.

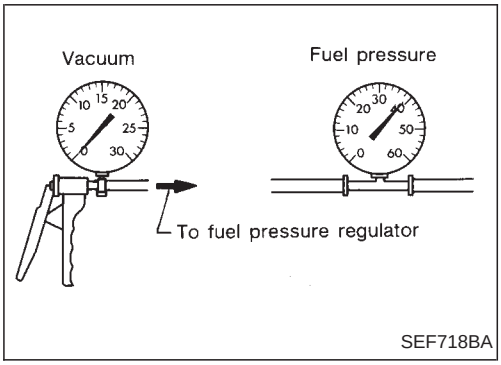

5. Read the indication of fuel pressure gauge.
   At idling:
   Approximately 235 kPa (2.35 bar, 2.4 kg/cm^2, 34 psi)
   A few seconds after ignition switch is turned OFF to ON:
   Approximately 294 kPa (2.94 bar, 3.0 kg/cm^2, 43 psi)
6. Stop engine and disconnect fuel pressure regulator vacuum hose from intake manifold.
7. Plug intake manifold with a rubber cap.
8. Connect variable vacuum source to fuel pressure regulator.
9. Start engine and read indication of fuel pressure gauge as vacuum is changed.

Fuel pressure should decrease as vacuum increases. If results are unsatisfactory, replace fuel pressure regulator.

Injector Removal and Installation

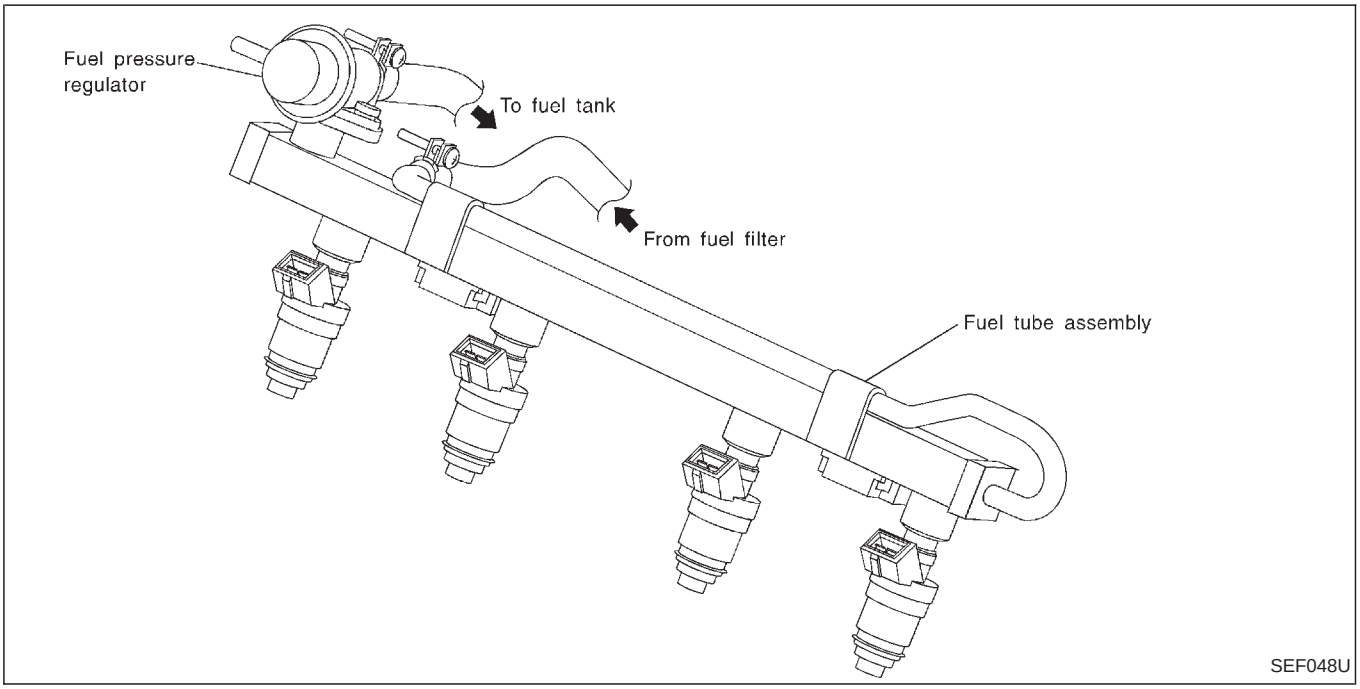

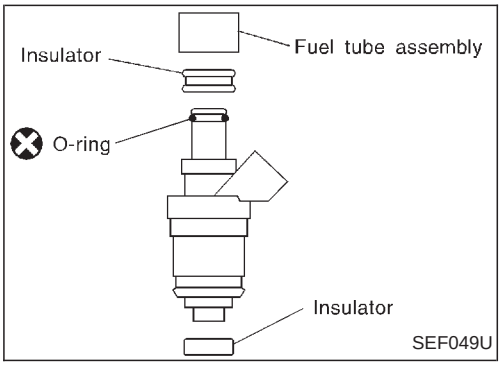

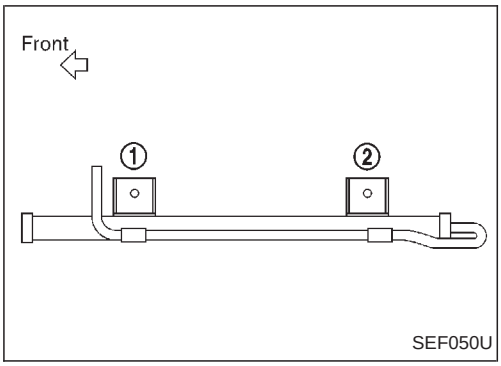

1. Release fuel pressure to zero.
2. Remove injector tube assembly with injectors from intake manifold.
3. Remove injectors from injector tube assembly.

- Do not pull on the connector.

4. Install injector to fuel tube assembly.

a. Clean exterior of injector tail piece.
b. Use new O-rings.

Always replace O-rings with new ones.
Lubricate O-rings with a smear of engine oil.

5. Install injectors with fuel tube assembly to intake manifold.

Tighten in numerical order shown in the figure.

a. First, tighten all bolts to 7.8 to 10.8 N·m (0.8 to 1.1 kg-m, 5.8 to 8.0 ft-lb).
b. Then, tighten all bolts to 16 to 21 N·m (1.6 to 2.1 kg-m, 12 to 15 ft-lb).

6. Install fuel hoses to fuel tube assembly.
7. Reinstall any parts removed in reverse order of removal.

CAUTION:
After properly connecting injectors to fuel tube assembly, check connections for fuel leakage.

Fast Idle Cam (FIC) Inspection and Adjustment

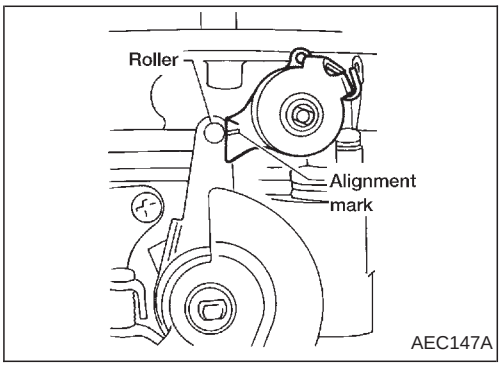

1. Remove air cleaner assembly.
2. Make sure the FIC alignment mark is centered on the lever roller as shown in the figure.

- An alignment mark is stamped on the FIC so that the top of the cam will face in the correct direction.

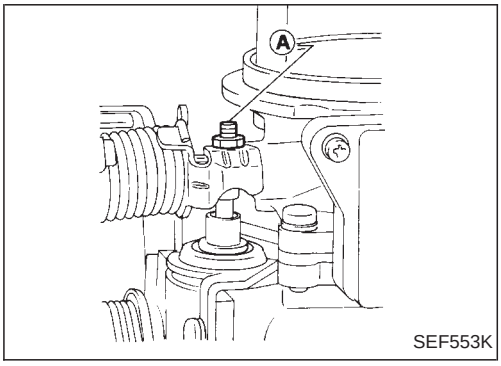

- If necessary, adjust the FIC screw Ⓐ until the alignment mark is centered on the lever roller.

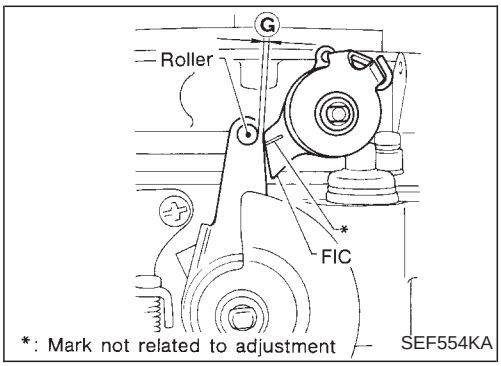

3. Start engine and warm up to operating temperature.
4. Measure clearance Ⓖ between the lever roller and the top of the FIC using a feeler gauge as shown in the figure.

   Clearance Ⓖ:

   2.0 - 2.6 mm (0.079 - 0.102 in)

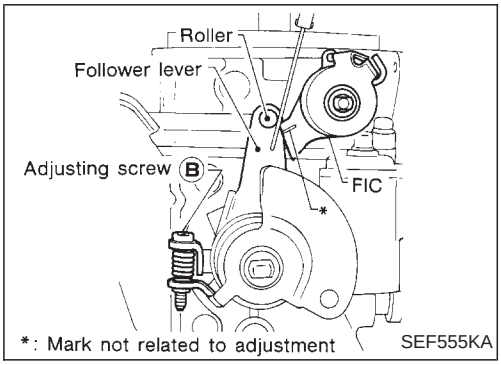

- If clearance Ⓖ is out of specification, adjust clearance Ⓖ using adjusting screw Ⓑ to 2.3 mm (0.091 in).

Idle Speed/Ignition Timing/Idle Mixture Ratio Adjustment

PREPARATION

- **Make sure that the following parts are in good order.**

(1) Battery
(2) Ignition system
(3) Engine oil and coolant levels
(4) Fuses
(5) ECM harness connector
(6) Vacuum hoses
(7) Air intake system
(Oil filler cap, oil level gauge, etc.)
(8) Fuel pressure
(9) Engine compression
(10) Throttle valve

- **On air conditioner equipped models, checks should be carried out while the air conditioner is "OFF".**
- **When measuring "CO" percentage, insert probe more than 40 cm (15.7 in) into tail pipe.**
- **Turn off headlamps, heater blower, rear window defogger.**
- **Keep front wheels pointed straight ahead.**

LHD MODELS

Overall inspection sequence

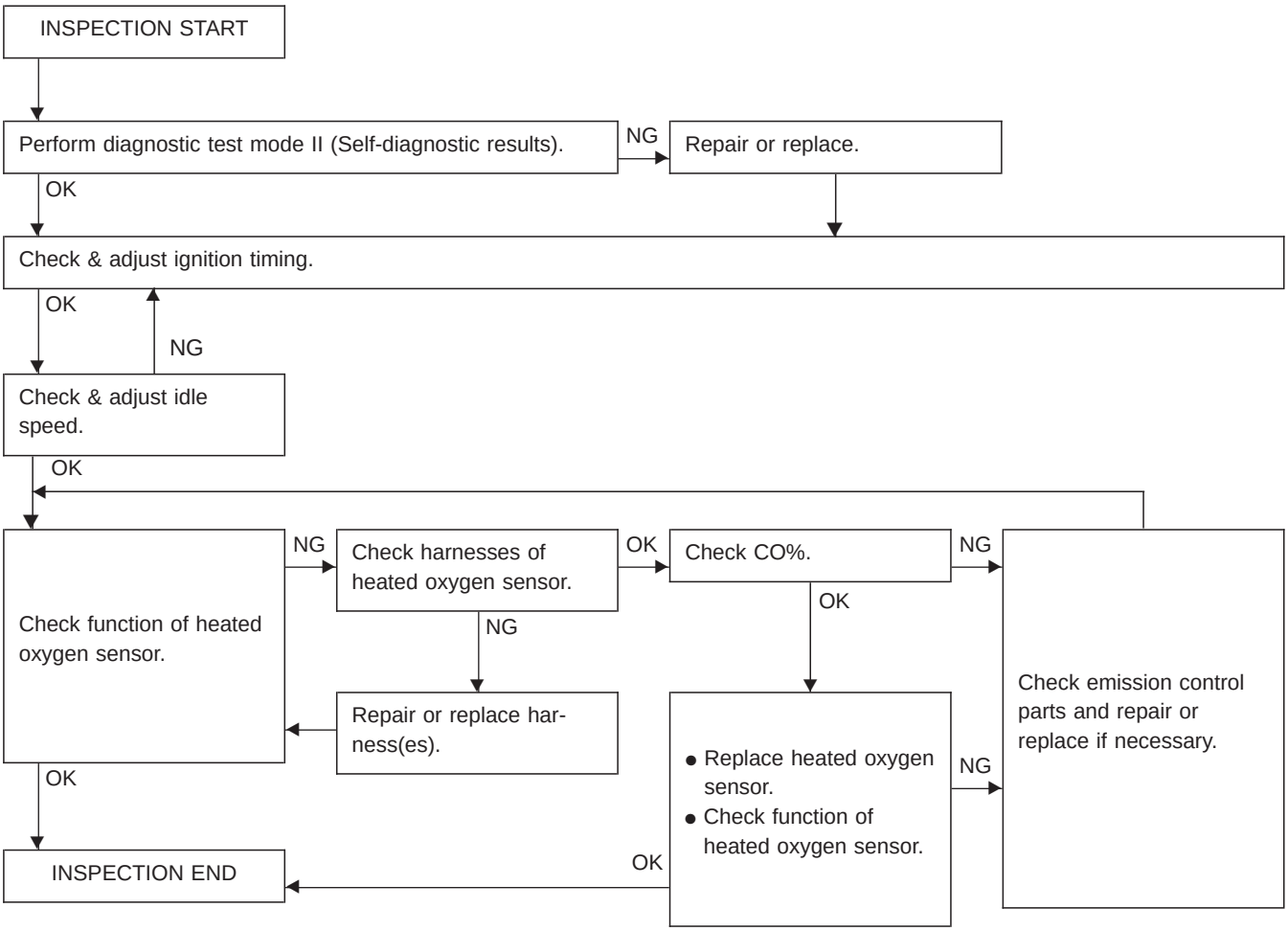

Idle Speed/Ignition Timing/Idle Mixture Ratio Adjustment (Cont'd)

A

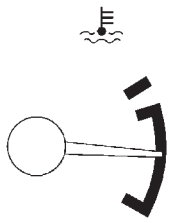

SEF146U

B

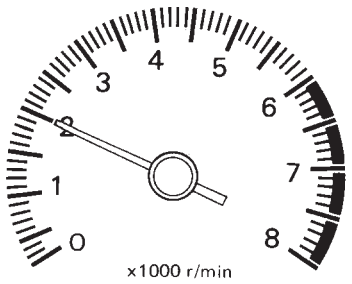

SEF247F

C

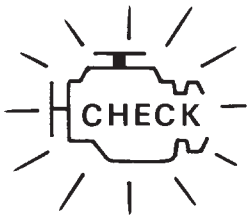

Malfunction indicator lamp

SEF051PA

D

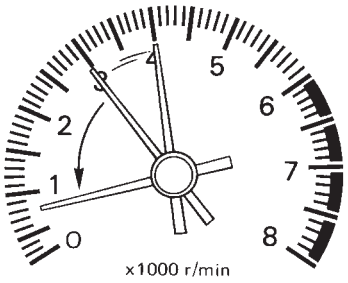

SEF248F

E

■ IGN TIMING ADJ ■ □

IGNITION TIMING FEEDBACK CONTROL WILL BE HELD BY TOUCHING START.
AFTER DOING SO, ADJUST IGNITION TIMING WITH A TIMING LIGHT BY TURNING THE CAMSHAFT POSITION SENSOR.

START

SEF546N

START

Visually check the following:
- Air cleaner clogging
- Hoses and ducts for leaks
- Electrical connectors
- Gasket
- Throttle valve and throttle position sensor operations

A

Start engine and warm it up until engine coolant temperature indicator points to the middle of gauge and ensure that engine speed is below 1,000 rpm.

B

Open engine hood and run engine at about 2,000 rpm for about 2 minutes under no-load.

C

Perform the diagnostic test mode II (Self-diagnostic results).

OK → D

NG → Repair or replace components as necessary. → D

D

Run engine at about 2,000 rpm for about 2 minutes under no-load.
Rev engine two or three times under no-load, then run engine for about 1 minute at idle speed.

E

1. Select "IGNITION TIMING ADJ" in WORK SUPPORT mode.
2. Touch "START".

1. Stop engine and disconnect throttle position sensor harness connector.
2. Start engine.

Rev engine (2,000 - 3,000 rpm) 2 or 3 times under no-load and run engine at idle speed.

F

Check ignition timing with a timing light.

10°±2° BTDC

OK → Ⓐ

NG → Ⓑ

Idle Speed/Ignition Timing/Idle Mixture Ratio Adjustment (Cont'd)

F

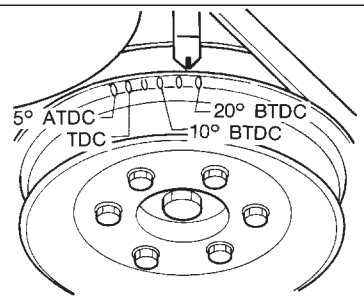

SMA189AA

G

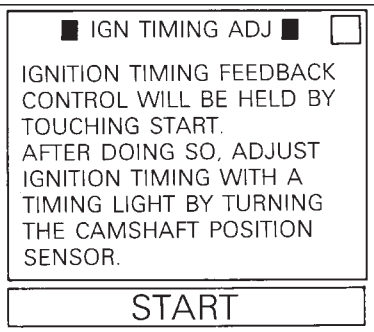

SEF546N

H

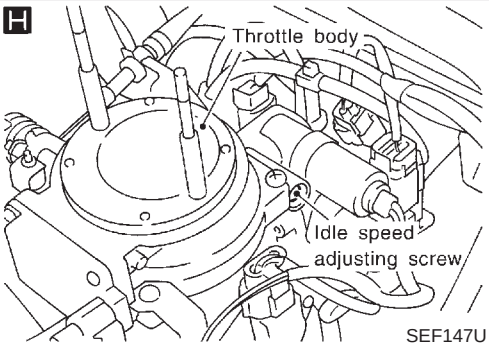

SEF147U

I

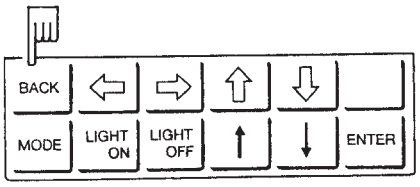

SEF913J

J

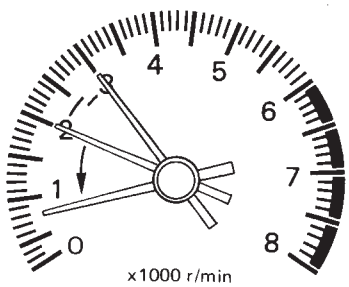

SEF602K

Ⓐ

Ⓑ

Adjust ignition timing to the specified value by turning distributor after loosening bolts which secure distributor.

10°±2° BTDC

Ⓕ

1. Select "IGNITION TIMING ADJ" in WORK SUPPORT mode.
2. Touch "START".

1. Stop engine and disconnect throttle position sensor harness connector.
2. Start engine.

G

Check base idle speed.

Read idle speed in "IGN TIMING ADJ" mode with CONSULT.

Check idle speed.

750±25 rpm

OK

NG

Rev engine (2,000 - 3,000 rpm) 2 or 3 times under no-load and run engine at idle speed.

H

Adjust base idle speed by turning idle speed adjusting screw.

750±25 rpm

I

Touch "Back".

1. Stop engine and connect throttle position sensor harness connector.
2. Start engine.

J

Rev engine (2,000 - 3,000 rpm) 2 or 3 times under no-load and run engine at idle speed.

Ⓒ

Idle Speed/Ignition Timing/Idle Mixture Ratio Adjustment (Cont'd)

K

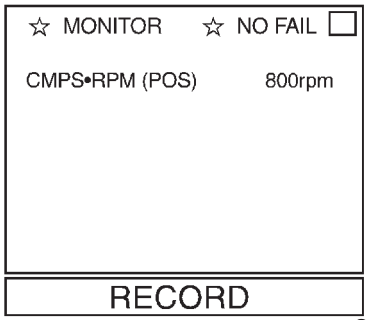

SEF051U

L

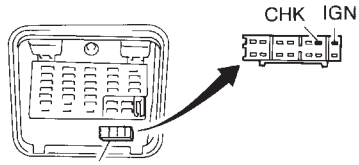

Data link connector for CONSULT (Connect CHK and IGN terminals with a suitable harness.)

SEF909P

M

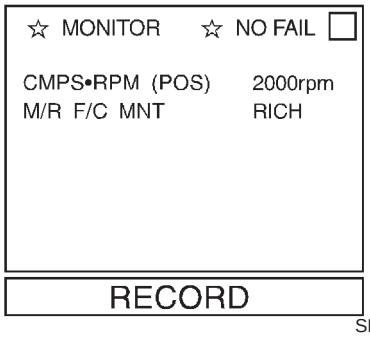

SEF052U

N

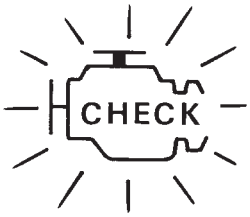

SEF051P

Ⓒ

K

Check target idle speed.

Read idle speed in "DATA MONITOR" mode with CONSULT.

OR

Check idle speed.

800±50 rpm

OK → L

NG → Check IACV-AAC valve and replace if necessary.

→ Check IACV-AAC valve harness and repair if necessary.

→ Check ECM function* by substituting another known good ECM.

* ECM may be the cause of a problem, but this is rarely the case.

L

Set the diagnostic test mode II (heated oxygen sensor monitor).

Run engine at about 2,000 rpm for about 2 minutes under no-load.

M N

Check heated oxygen sensor signal.

1. See "M/R F/C MNT" in "DATA MONITOR" mode.
2. Maintaining engine at 2,000 rpm under no-load (engine is warmed up sufficiently), check that the monitor fluctuates between "LEAN" and "RICH" more than 5 times during 10 seconds.
   1 cycle: RICH → LEAN → RICH
   2 cycles: RICH → LEAN → RICH → LEAN → RICH

OR

Make sure that malfunction indicator lamp goes on and off more than 5 times during 10 seconds at 2,000 rpm.

NG → Ⓓ

OK → INSPECTION END

Idle Speed/Ignition Timing/Idle Mixture Ratio Adjustment (Cont'd)

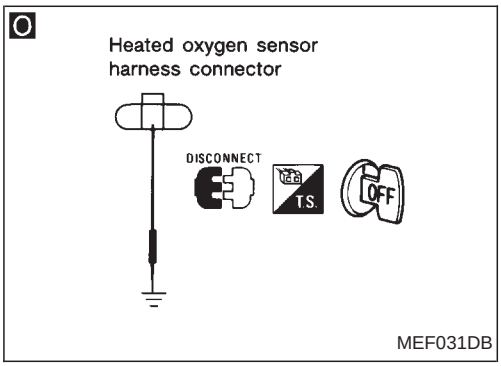

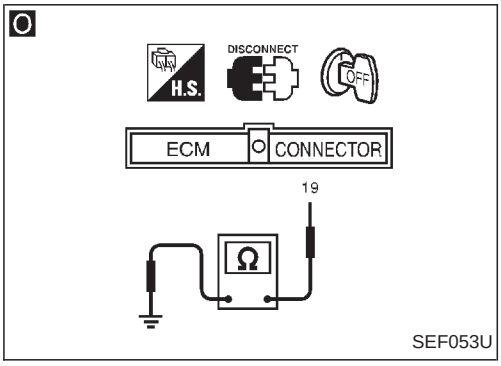

Ⓓ

Check heated oxygen sensor harness:
1. Turn off engine and disconnect battery ground cable.
2. Disconnect ECM harness connector from ECM.
3. Disconnect heated oxygen sensor harness connector and connect terminal for heated oxygen sensor to ground with a jumper wire.
4. Check for continuity between terminal ⑲ of ECM harness connector and ground metal on vehicle body.

Continuity exists ... OK
Continuity does not exist ... NG

OK → Connect ECM harness connector to ECM.

NG → Repair harness. → Ⓕ

Connect ECM harness connector to ECM.

1. Select "ENG COOLANT TEMP" in "ACTIVE TEST" mode.
2. Set "COOLANT TEMP" at 20°C (68°F).

- Disconnect engine coolant temperature sensor harness connector.
- Connect a resistor (2.5 kΩ) between terminals of engine coolant temperature sensor harness connector.

Start engine and warm it up until engine coolant temperature indicator points to the middle of gauge. (Be careful to start engine after setting "COOLANT TEMP" or installing a 2.5 kΩ resistor.)

Rev engine two or three times under no-load then run engine at idle speed.

Ⓔ

Idle Speed/Ignition Timing/Idle Mixture Ratio Adjustment (Cont'd)

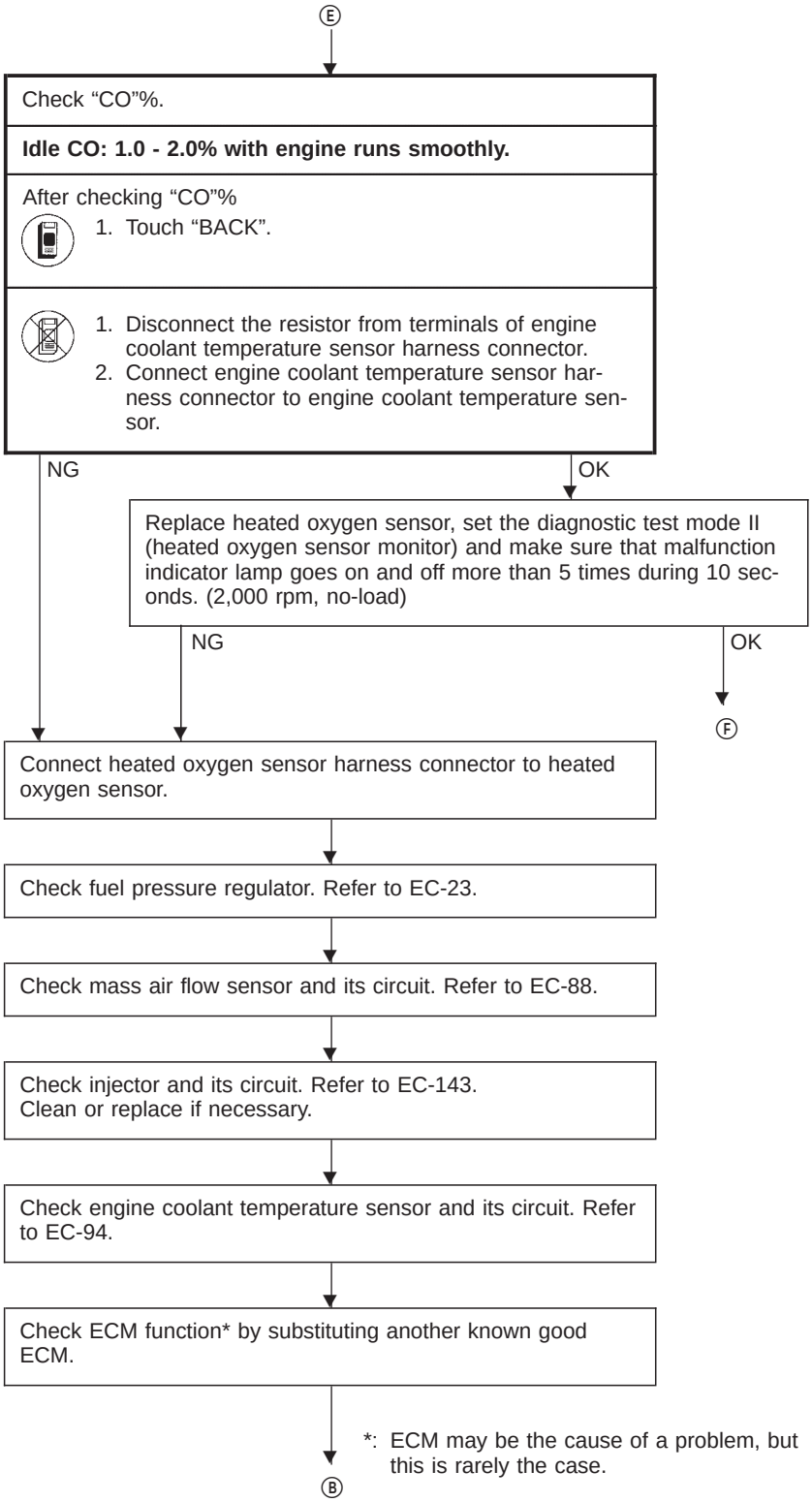

Idle Speed/Ignition Timing/Idle Mixture Ratio Adjustment (Cont'd)

RHD MODELS

Overall inspection sequence

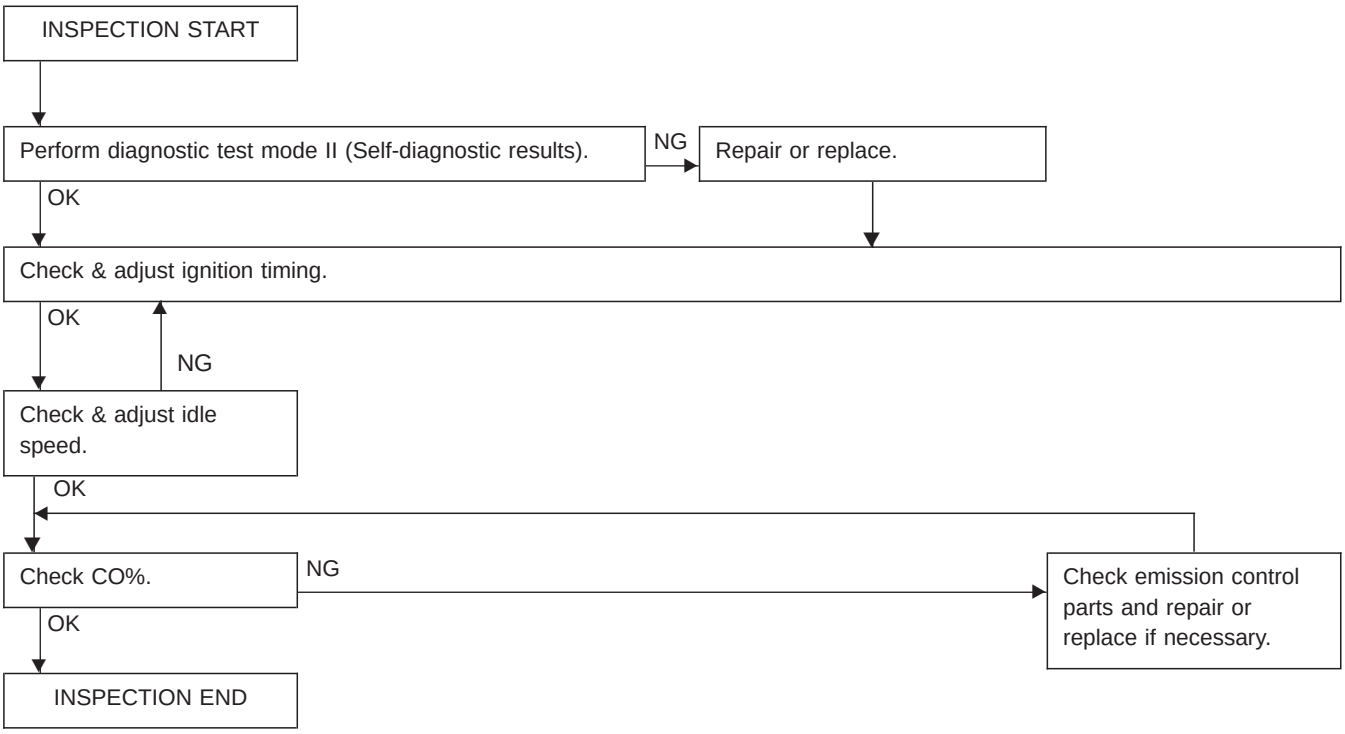

Idle Speed/Ignition Timing/Idle Mixture Ratio Adjustment (Cont'd)

Checking and adjusting idle speed, ignition timing

A

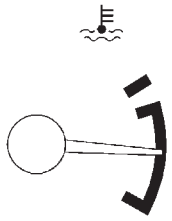

SEF146U

B

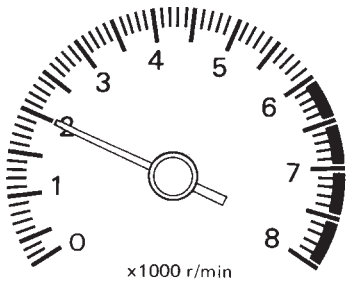

SEF247F

C

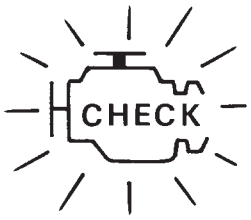

Malfunction indicator lamp

SEF051PA

D

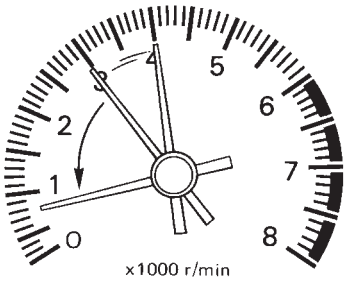

SEF248F

E

■ IGN TIMING ADJ ■ □

IGNITION TIMING FEEDBACK CONTROL WILL BE HELD BY TOUCHING START.
AFTER DOING SO, ADJUST IGNITION TIMING WITH A TIMING LIGHT BY TURNING THE CAMSHAFT POSITION SENSOR.

START

SEF546N

START

Visually check the following:
- Air cleaner clogging
- Hoses and ducts for leaks
- Electrical connectors
- Gasket
- Throttle valve and throttle position sensor operations

A

Start engine and warm it up until engine coolant temperature indicator points to the middle of gauge and ensure that engine speed is below 1,000 rpm.

B

Open engine hood and run engine at about 2,000 rpm for about 2 minutes under no-load.

C

Perform the diagnostic test mode II (Self-diagnostic results).

OK → D

NG → Repair or replace components as necessary. → D

D

Run engine at about 2,000 rpm for about 2 minutes under no-load. Rev engine two or three times under no-load, then run engine for about 1 minute at idle speed.

E

1. Select "IGNITION TIMING ADJ" in WORK SUPPORT mode.
2. Touch "START".

1. Stop engine and disconnect throttle position sensor harness connector.
2. Start engine.

Rev engine (2,000 - 3,000 rpm) 2 or 3 times under no-load and run engine at idle speed.

F

Check ignition timing with a timing light.

10°±2° BTDC

OK → A

NG → B

Idle Speed/Ignition Timing/Idle Mixture Ratio Adjustment (Cont'd)

F

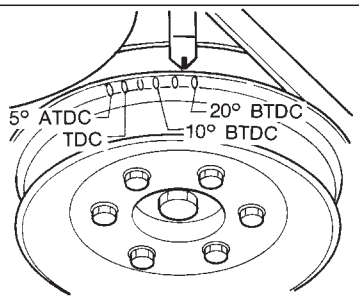

SMA189AA

G

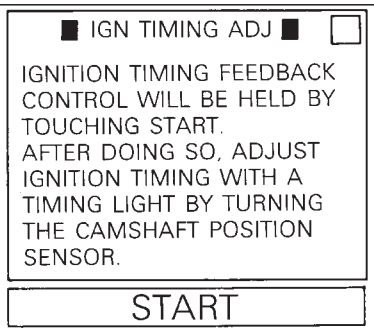

SEF546N

H

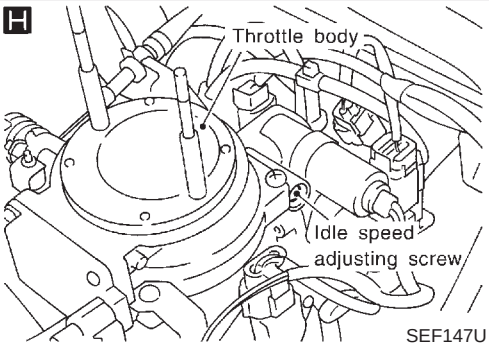

SEF147U

I

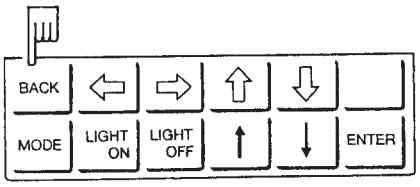

SEF913J

J

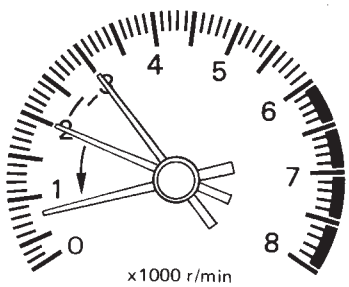

SEF602K

Ⓐ Ⓑ

Adjust ignition timing to the specified value by turning distributor after loosening bolts which secure distributor.

10°±2° BTDC

G

Check base idle speed.

Read idle speed in "IGN TIMING ADJ" mode with CONSULT.

Check idle speed.

750±25 rpm

OK → Ⓒ

NG → Rev engine (2,000 - 3,000 rpm) 2 or 3 times under no-load and run engine at idle speed.

H

Adjust base idle speed by turning idle speed adjusting screw.

750±25 rpm

I

Touch "Back".

1. Stop engine and connect throttle position sensor harness connector.
2. Start engine.

J

Rev engine (2,000 - 3,000 rpm) 2 or 3 times under no-load and run engine at idle speed.

Ⓒ

Idle Speed/Ignition Timing/Idle Mixture Ratio Adjustment (Cont'd)

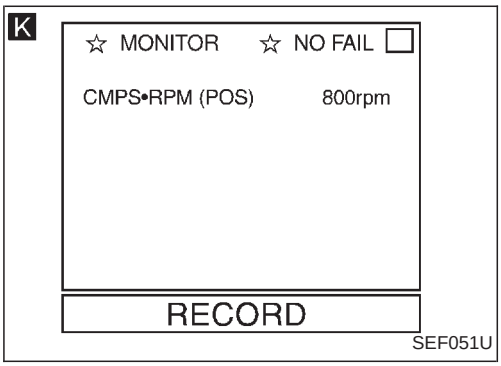

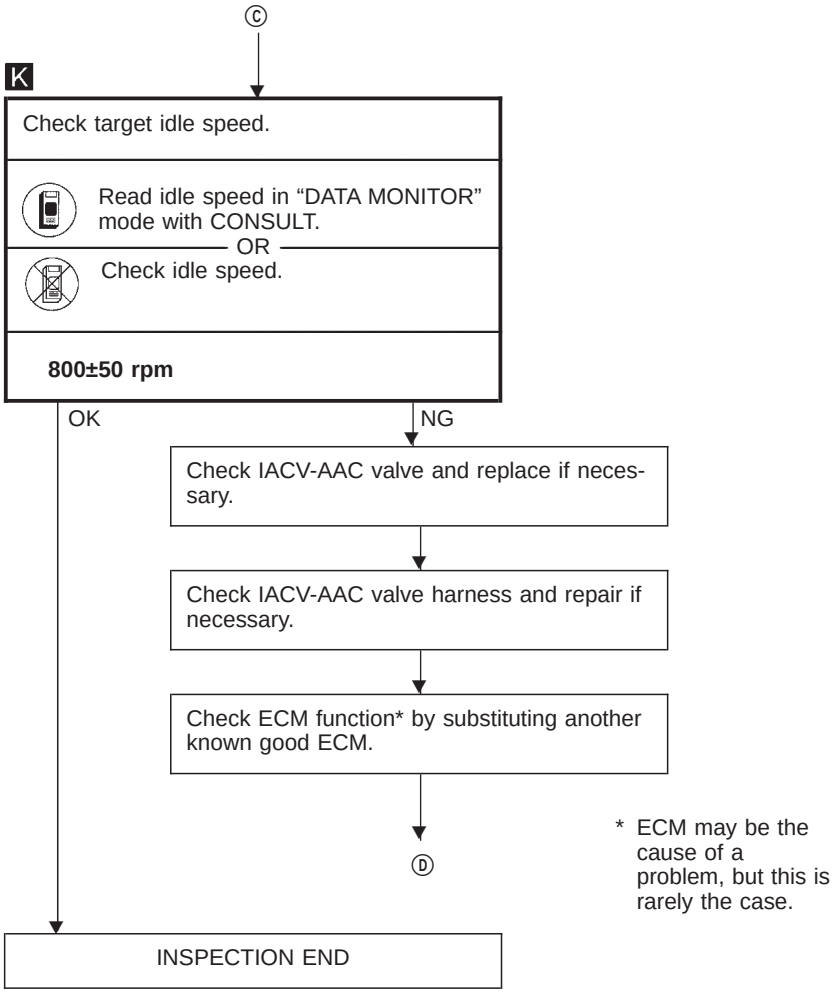

Idle Speed/Ignition Timing/Idle Mixture Ratio Adjustment (Cont'd)

Checking and adjusting mixture ratio

A

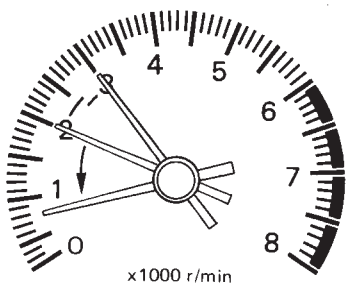

SEF602K

B

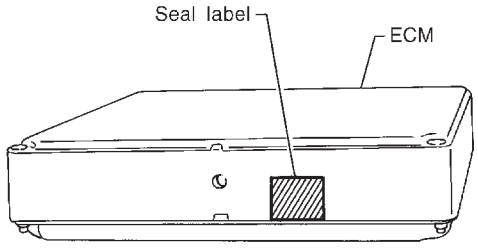

SEF494S

C

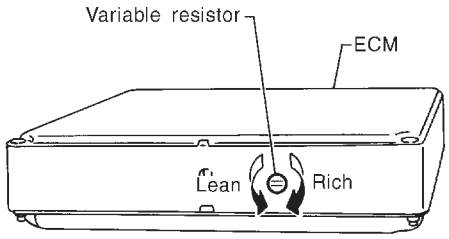

SEF495S

INSPECTION START

Check and adjust idle speed and ignition timing.
(Refer to EC-33.)

Idle speed: 800±50 rpm
Ignition timing: 10°±2° BTDC

A

Rev engine (2,000 - 3,000 rpm) 2 or 3 times under no-load, then run engine at idle speed.

Check "CO"% with "CO"-meter.

Idle "CO"%
Below 2.0

OK → Stop engine.

NG

B

Remove seal label which seals ECM variable resistor.

C

Adjust "CO"% by turning variable resistor on ECM.

Idle "CO"%
1.5±0.5

Install a new seal label on ECM variable resistor.

Rev engine (2,000 - 3,000 rpm) 2 or 3 times under no-load, then run engine at idle speed.

Check idle speed.

Idle speed: 800±50 rpm

NG → Adjust idle speed. (See page EC-33.) → Stop engine.

OK → Stop engine.

Stop engine.

INSPECTION END

Introduction

The ECM (ECCS control module) has an on board diagnostic system, which detects malfunctions related to engine sensors or actuators. Self-diagnosis items are listed in “DIAGNOSTIC TROUBLE CODE INDEX”, EC-2.

The malfunction indicator lamp (MIL) on the instrument panel lights up when a malfunction is detected, or when the ECM enters fail-safe mode (Refer to EC-61.).

Diagnostic Trouble Code (DTC)

HOW TO CONFIRM MALFUNCTION ITEMS

Malfunction items can be confirmed by the following methods.

1. The number of blinks of the malfunction indicator lamp in the Diagnostic Test Mode II (Self- Diagnostic Results) indicates the DTC. Examples: 11, 21 etc.
2. CONSULT displays the malfunctioning component or system in “SELF DIAGNOSTIC RESULTS” mode.

- **Output of a DTC indicates a malfunction. However, Mode II does not indicate whether the malfunction is still occurring or has occurred in the past and has returned to normal.**
  CONSULT can identify malfunction status as shown below. Therefore, using CONSULT (if available) is recommended.

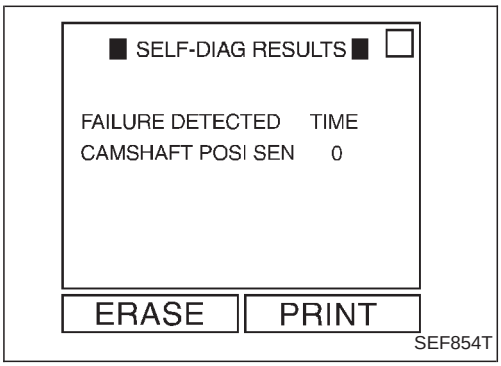

A sample of CONSULT display is shown at left. The malfunction is displayed in SELF-DIAGNOSTIC RESULTS mode of CONSULT. Time data indicates how many times the vehicle was driven after the last detection of a malfunction.
If the malfunction is being detected currently, the time data will be “0”.

HOW TO ERASE DTC

The DTC can be erased from the back-up memory in the ECM by the following methods.

Selecting “ERASE” in the SELF- DIAG RESULTS” mode with CONSULT

Changing the diagnostic test mode from Diagnostic Test Mode II to Mode I by turning the mode selector on the ECM (RHD model only) or connecting the data link connector for CONSULT terminals. (Refer to EC-40, 42.)

- **If the battery terminal is disconnected, the DTC will be lost within 24 hours.**
- **Erasing the DTC, using CONSULT is easier and quicker than switching the mode selector on the ECM (RHD model only) or connecting the data link connector for CONSULT terminals.**

Diagnostic Trouble Code (DTC) (Cont'd)

How to erase DTC (With CONSULT)

1. If the ignition switch stays "ON" after repair work, be sure to turn ignition switch "OFF" once. Wait at least 5 seconds and then turn it "ON" (engine stopped) again.
2. Turn CONSULT "ON" and touch "ENGINE".
3. Touch "SELF-DIAG RESULTS".
4. Touch "ERASE". (The DTC in the ECM will be erased.)

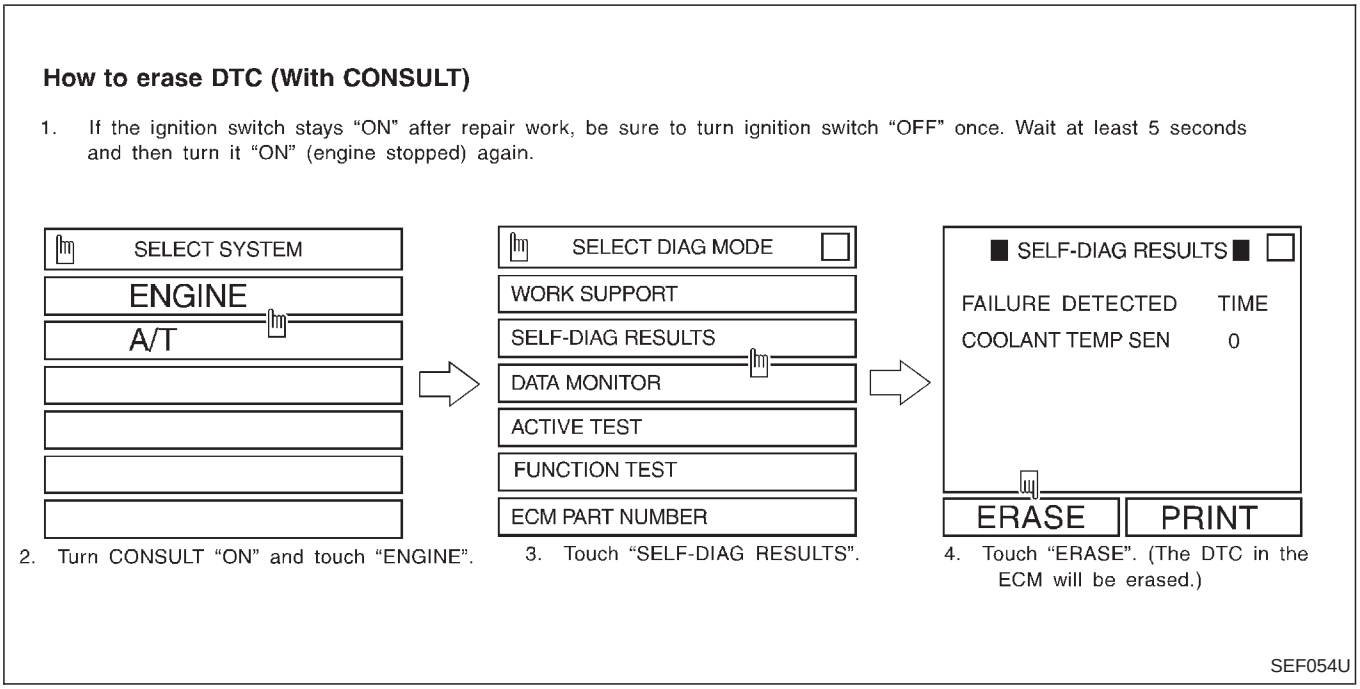

How to erase DTC (Without CONSULT)

1. If the ignition switch stays "ON" after repair work, be sure to turn ignition switch "OFF" once. Wait at least 5 seconds and then turn it "ON" again.
2. Change the diagnostic test mode from Mode II to Mode I by turning the mode selector on the ECM (RHD model only) or connecting the data link connector for CONSULT terminals. (See EC-40, 42.)

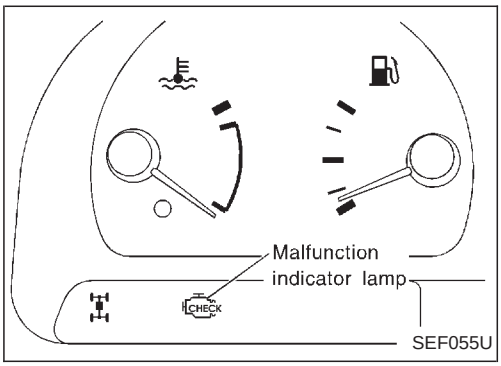

Malfunction Indicator Lamp (MIL)

The malfunction indicator lamp is located on the instrument panel.

1. The malfunction indicator lamp will light up when the ignition switch is turned ON without the engine running. This is for checking the blown lamp.
   - If the malfunction indicator lamp does not light up, see the WARNING LAMPS AND CHIME in the EL section. (Or see EC-171, 172.)
2. When the engine is started, the malfunction indicator lamp should go off.
   If the lamp remains on, the on board diagnostic system has detected an engine system malfunction.

ON BOARD DIAGNOSTIC SYSTEM FUNCTION

The on board diagnostic system has the following four functions.

Diagnostic Test Mode I

1. BULB CHECK : This function checks the bulb for damage (blown, open circuit, etc.) of the malfunction indicator lamp.
   If the MIL does not come on, check MIL circuit and ECM test mode selector. (See next page.)
2. MALFUNCTION WARNING : This is a usual driving condition. When a malfunction is detected, the MIL will light up to inform the driver that a malfunction has been detected.

Diagnostic Test Mode II

3. SELF-DIAGNOSTIC RESULTS : This function allows DTCs to be read.
4. HEATED OXYGEN SENSOR MONITOR : This function allows the fuel mixture condition (lean or rich), monitored by heated oxygen sensor, to be read.

MIL Flashing without DTC

If the ECM is in Diagnostic Test Mode II, the MIL may flash when the engine is running. In this case, check ECM test mode selector following “HOW TO SWITCH DIAGNOSTIC TEST MODES” on next page.
How to switch the diagnostic test (function) modes and details of the above functions are described later. (See page EC-40, 42.)

Condition		Diagnostic Test Mode I	Diagnostic Test Mode II
Ignition switch in “ON” position	Engine stopped	BULB CHECK	SELF-DIAGNOSTIC RESULTS
	Engine running	MALFUNCTION WARNING	HEATED OXYGEN SENSOR MONITOR

Malfunction Indicator Lamp (MIL) (Cont'd)

HOW TO SWITCH DIAGNOSTIC TEST MODES (LHD models)

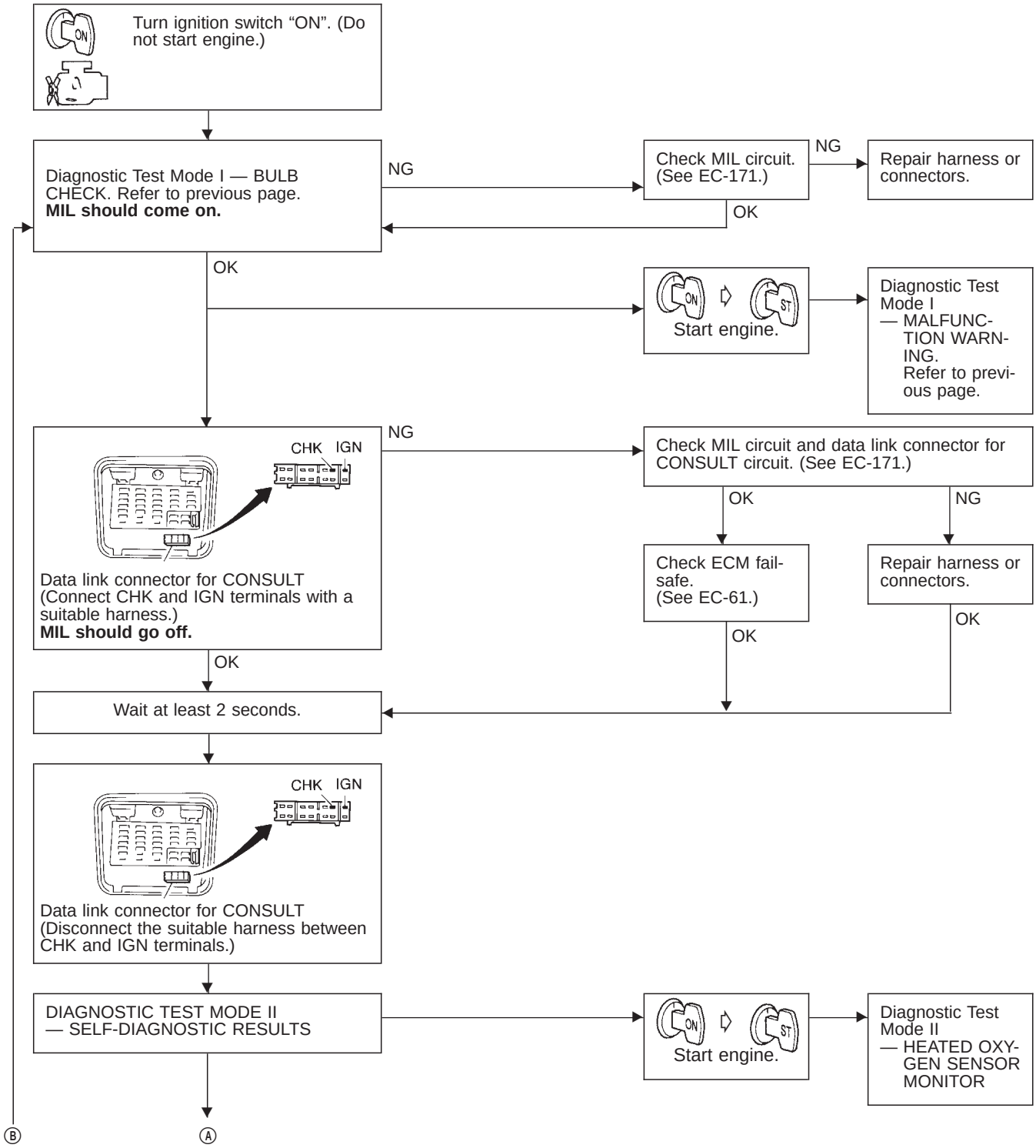

Malfunction Indicator Lamp (MIL) (Cont'd)

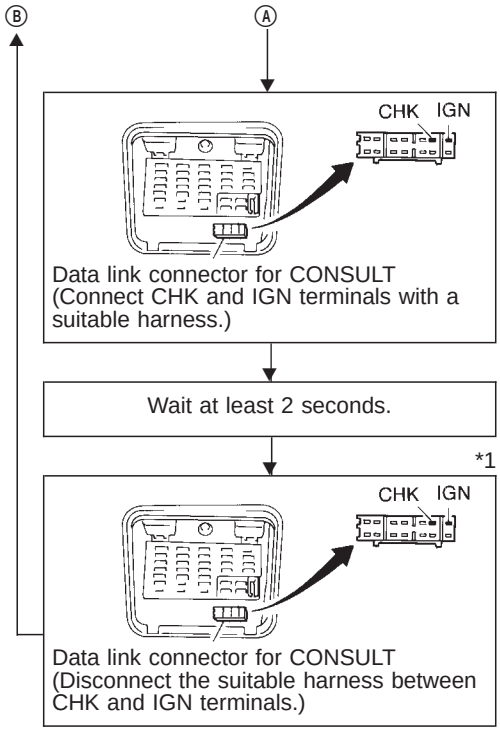

- **Switching the modes is not possible when the engine is running.**
- **When ignition switch is turned off during diagnosis, power to ECM will drop after approx. 5 seconds.**
  The diagnosis will automatically return to Diagnostic Test Mode I.

***1: If the suitable harness is disconnected at this time, the diagnostic trouble code will be erased from the backup memory in the ECM.**

Malfunction Indicator Lamp (MIL) (Cont'd)

HOW TO SWITCH DIAGNOSTIC TEST MODES (RHD models)

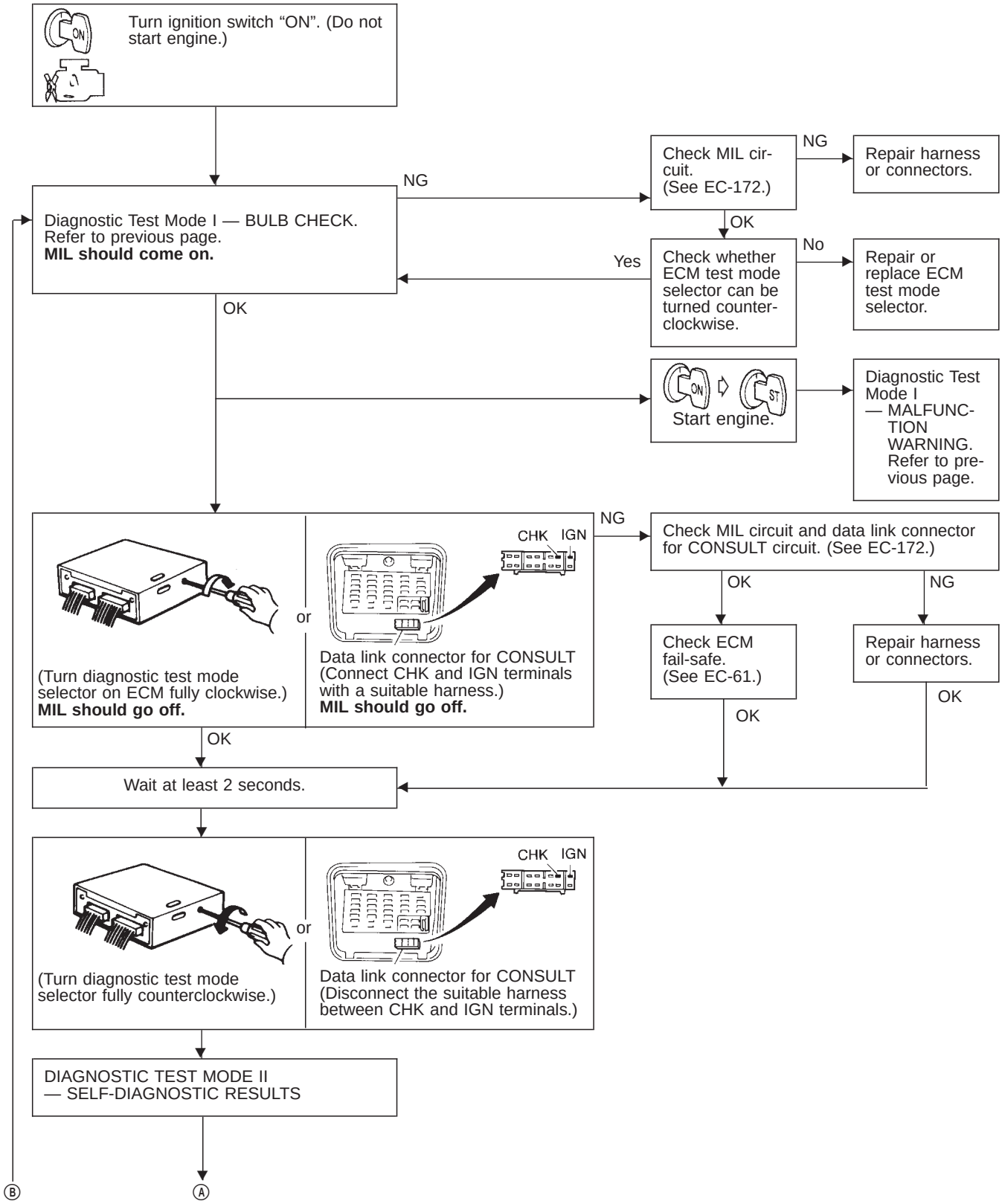

Malfunction Indicator Lamp (MIL) (Cont'd)

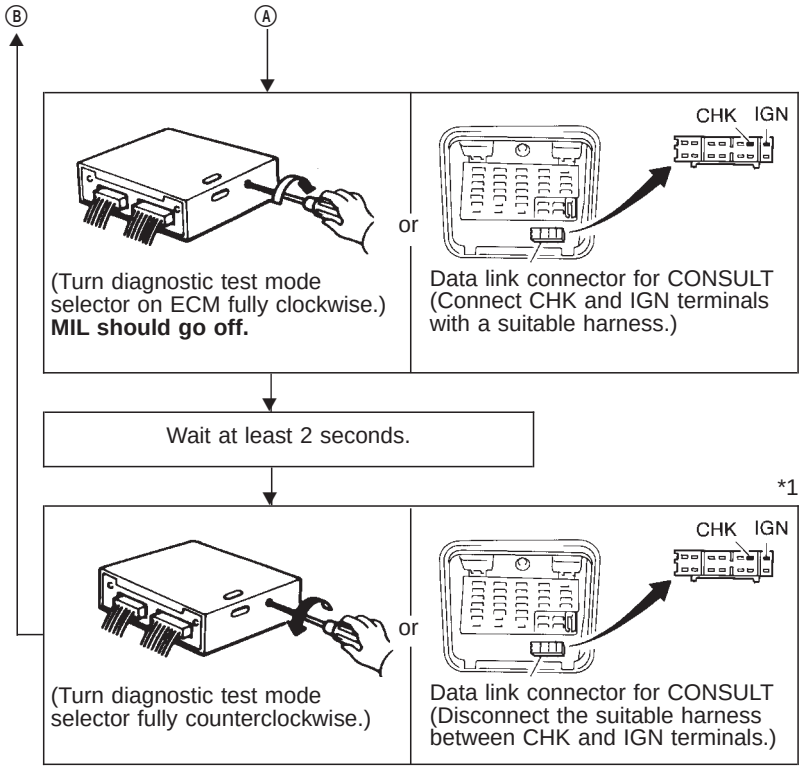

- **Switching the modes is not possible when the engine is running.**
- **When ignition switch is turned off during diagnosis, power to ECM will drop after approx. 5 seconds.**
  The diagnosis will automatically return to Diagnostic Test Mode I.
- **Turn back diagnostic test mode selector to the fully counterclockwise position whenever vehicle is in use.**

***1: If the selector is turned fully counterclockwise or suitable harness is disconnected at this time, the diagnostic trouble code will be erased from the backup memory in the ECM.**

DIAGNOSTIC TEST MODE I—BULB CHECK

In this mode, the MALFUNCTION INDICATOR LAMP on the instrument panel should stay ON. If it remains OFF, check the bulb. (See the WARNING LAMPS AND CHIME in the EL section. Or see EC-171, 172.)

DIAGNOSTIC TEST MODE I—MALFUNCTION WARNING

MALFUNCTION INDICATOR LAMP	Condition
ON	When the malfunction is detected (Refer to EC-2.) or the ECM's CPU is malfunctioning.
OFF	No malfunction

- These Diagnostic Trouble Code Numbers are clarified in Diagnostic Test Mode II (SELF-DIAGNOSTIC RESULTS).

DIAGNOSTIC TEST MODE II—SELF-DIAGNOSTIC RESULTS

In this mode, a diagnostic trouble code is indicated by the number of blinks of the MALFUNCTION INDICATOR LAMP as shown below.

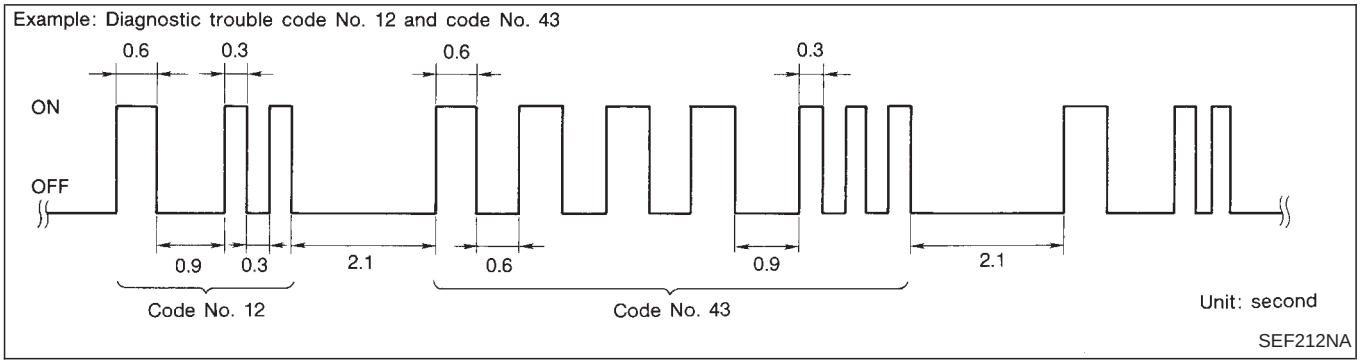

Long (0.6 second) blinking indicates the number of ten digits, and short (0.3 second) blinking indicates the number of single digits. For example, the malfunction indicator lamp blinks 4 times for about 5 seconds (0.6 sec x 8 times) and then it blinks three times for about 1 second (0.3 sec x 3 times). This indicates the DTC "43" and refers to the malfunction of the throttle position sensor.
In this way, all the detected malfunctions are classified by their diagnostic trouble code numbers. The DTC "55" refers to no malfunction. (See DIAGNOSTIC TROUBLE CODE INDEX, refer to page EC-2.)

How to erase diagnostic test mode II (Self-diagnostic results)

The diagnostic trouble code can be erased from the backup memory in the ECM when the diagnostic test mode is changed from Diagnostic Test Mode II to Diagnostic Test Mode I. (Refer to "HOW TO SWITCH DIAGNOSTIC TEST MODES".)

- **If the battery terminal is disconnected, the diagnostic trouble code will be lost from the backup memory within 24 hours.**
- **Be careful not to erase the stored memory before starting trouble diagnoses.**

DIAGNOSTIC TEST MODE II—HEATED OXYGEN SENSOR MONITOR

In this mode, the MALFUNCTION INDICATOR LAMP displays the condition of the fuel mixture (lean or rich) which is monitored by the heated oxygen sensor.

MALFUNCTION INDICATOR LAMP	Fuel mixture condition in the exhaust gas	Air fuel ratio feedback control condition
ON	Lean	Closed loop control
OFF	Rich	
*Remains ON or OFF	Any condition	Open loop control

*: Maintains conditions just before switching to open loop.

To check the heated oxygen sensor function, start engine in the Diagnostic Test Mode II and warm it up until engine coolant temperature indicator points to the middle of the gauge.
Next run engine at about 2,000 rpm for about 2 minutes under no-load conditions. Then make sure that the MALFUNCTION INDICATOR LAMP comes ON more than 5 times every 10 seconds when measured at 2,000 rpm under no-load.

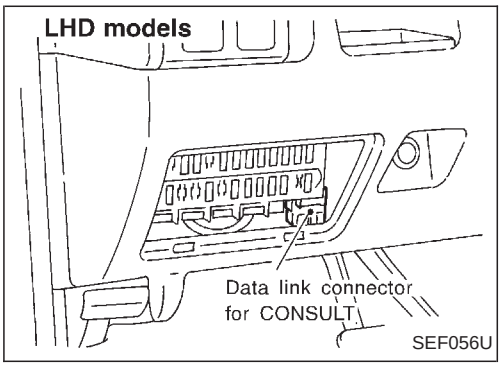

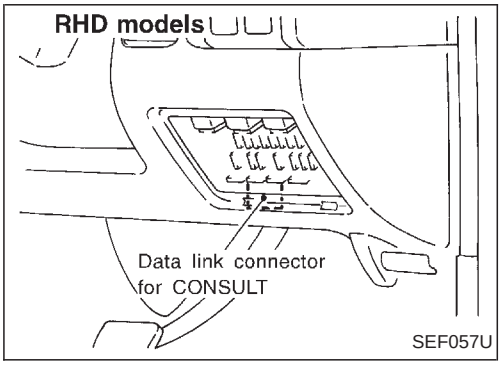

CONSULT

CONSULT INSPECTION PROCEDURE

1. Turn off ignition switch.
2. Connect “CONSULT” to data link connector for CONSULT. (Data link connector for CONSULT is located behind the fuse box cover.)

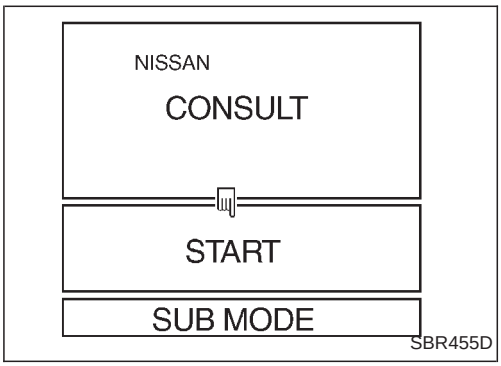

3. Turn on ignition switch.
4. Touch “START”.

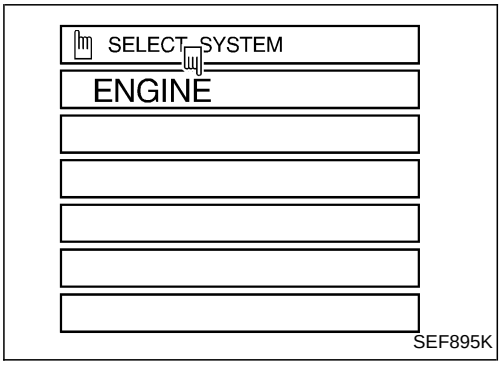

5. Touch “ENGINE”.

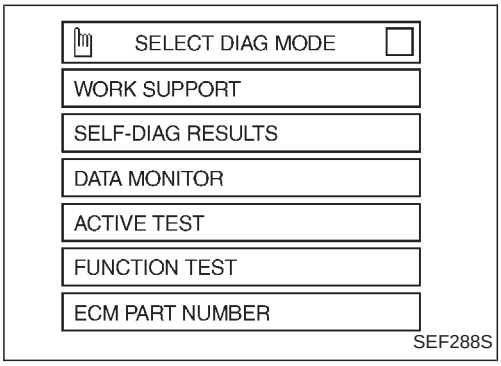

6. Perform each diagnostic test mode according to each service procedure.

For further information, see the CONSULT Operation Manual.

CONSULT (Cont'd)

FUNCTION

Diagnostic test mode	Function
Work support	A technician can adjust some devices faster and more accurately by following indications on CONSULT.
Self-diagnostic results	Self-diagnostic results can be read and erased quickly.
Data monitor	Input/Output data in the ECM can be read.
Active test	CONSULT drives some actuators apart from the ECM's and also shifts some parameters in a specified range.
Function test	Conducted by CONSULT instead of a technician to determine whether each system is "OK" or "NG".
ECM part number	ECM part number can be read.

WORK SUPPORT MODE

WORK ITEM	CONDITION	USAGE
THRTL POS SEN ADJ	CHECK THE THROTTLE POSITION SENSOR SIGNAL. ADJUST IT TO THE SPECIFIED VALUE BY ROTATING THE SENSOR BODY UNDER THE FOLLOWING CONDITIONS. ● IGN SW "ON" ● ENG NOT RUNNING ● ACC PEDAL NOT PRESSED	When adjusting throttle position sensor initial position
IGNITION TIMING ADJ	● IGNITION TIMING FEEDBACK CONTROL WILL BE HELD BY TOUCHING "START". AFTER DOING SO, ADJUST IGNITION TIMING WITH A TIMING LIGHT BY TURNING THE CRANKSHAFT POSITION SENSOR.	When adjusting initial ignition timing
IACV-AAC VALVE ADJ	SET ENGINE SPEED AT THE SPECIFIED VALUE UNDER THE FOLLOWING CONDITIONS. ● ENGINE WARMED UP ● NO-LOAD	
FUEL PRESSURE RELEASE	● FUEL PUMP WILL STOP BY TOUCHING "START" DURING IDLING. CRANK A FEW TIMES AFTER ENGINE STALLS.	When releasing fuel pressure from fuel line

CONSULT (Cont'd)

ECCS COMPONENT PARTS/CONTROL SYSTEMS APPLICATION

Item			DIAGNOSTIC TEST MODE				
			WORK SUPPORT	SELF-DIAGNOSTIC RESULTS	DATA MONITOR	ACTIVE TEST	FUNCTION TEST
ECCS COMPONENT PARTS	INPUT	Camshaft position sensor		X	X		
		Mass air flow sensor		X	X		
		Engine coolant temperature sensor		X	X	X	
		Heated oxygen sensor			X		
		Vehicle speed sensor			X		X
		Throttle position sensor	X	X	X		X
		Intake air temperature sensor		X	X		
		Ignition switch (start signal)			X		X
		Closed throttle position switch			X		X
		Air conditioner switch			X		
		Neutral position switch			X		X
		Power steering oil pressure switch			X		X
		Battery voltage			X		
	OUTPUT	Injectors			X	X	X
		Power transistor (Ignition timing)	X	X (Ignition signal)	X	X	X
		IACV-AAC valve	X		X	X	X
		Air conditioner relay			X		
		Fuel pump relay	X		X	X	X
		Swirl control valve control solenoid valve			X	X	X
		EVAP canister purge control solenoid valve*			X	X	X

X: Applicable
* : This item is indicated as "EGRC SOL/V" on the CONSULT screen.

CONSULT (Cont'd)

SELF-DIAGNOSTIC MODE

Regarding items detected in "SELF-DIAG RESULTS" mode, refer to "DIAGNOSTIC TROUBLE CODE INDEX", EC-2.

DATA MONITOR MODE

Monitored item [Unit]	ECM input signals	Main signals	Description	Remarks
CMPS·RPM (POS) [rpm]	○	○	• Indicates the engine speed computed from the POS signal (1° signal) of the camshaft position sensor.	
MAS AIR/FL SE [V]	○	○	• The signal voltage of the mass air flow sensor is displayed.	• When the engine is stopped, a certain value is indicated.
COOLAN TEMP/S [°C] or [°F]	○	○	• The engine coolant temperature (determined by the signal voltage of the engine coolant temperature sensor) is displayed.	• When the engine coolant temperature sensor is open or short-circuited, ECM enters fail-safe mode. The engine coolant temperature determined by the ECM is displayed.
O2 SEN [V]	○	○	• The signal voltage of the heated oxygen sensor is displayed.	• LHD models only
M/R F/C MNT [RICH/LEAN]	○	○	• Display of heated oxygen sensor signal during air-fuel ratio feedback control: RICH ... means the mixture became "rich", and control is being affected toward a leaner mixture. LEAN ... means the mixture became "lean", and control is being affected toward a rich mixture.	• After turning ON the ignition switch, "RICH" is displayed until air-fuel mixture ratio feedback control begins. • When the air-fuel ratio feedback is clamped, the value just before the clamping is displayed continuously. • LHD models only
VHCL SPEED SE [km/h] or [mph]	○	○	• The vehicle speed computed from the vehicle speed sensor signal is displayed.	
BATTERY VOLT [V]	○	○	• The power supply voltage of ECM is displayed.	
THRTL POS SEN [V]	○	○	• The throttle position sensor signal voltage is displayed.	
INT/A TEMP SE [°C] or [°F]	○		• The intake air temperature (determined by the signal voltage of the intake air temperature sensor) is indicated.	
START SIGNAL [ON/OFF]	○	○	• Indicates [ON/OFF] condition from the starter signal.	• After starting the engine, [OFF] is displayed regardless of the starter signal.
CLSD THL/POSI [ON/OFF]	○	○	• Indicates [ON/OFF] condition from the throttle position sensor signal.	
AIR COND SIG [ON/OFF]	○	○	• Indicates [ON/OFF] condition of the air conditioner switch as determined by the air conditioner signal.	
P/N POSI SW [ON/OFF]	○	○	• Indicates [ON/OFF] condition from the park/neutral position switch signal.	
PW/ST SIGNAL [ON/OFF]	○	○	• [ON/OFF] condition of the power steering oil pressure switch determined by the power steering oil pressure signal is indicated.	

NOTE:
Any monitored item that does not match the vehicle being diagnosed is deleted from the display automatically.

CONSULT (Cont'd)

Monitored item [Unit]	ECM input signals	Main signals	Description	Remarks
INJ PULSE [msec]		○	• Indicates the actual fuel injection pulse width compensated by ECM according to the input signals.	• When the engine is stopped, a certain computed value is indicated.
IGN TIMING [BTDC]		○	• Indicates the ignition timing computed by ECM according to the input signals.	• When the engine is stopped, a certain value is indicated.
IACV-AAC/V [%]		○	• Indicates the idle air control valve (AAC valve) control value computed by ECM according to the input signals.	
A/F ALPHA [%]		○	• The mean value of the air-fuel ratio feedback correction factor per cycle is indicated.	• When the engine is stopped, a certain value is indicated. • This data also includes the data for the air-fuel ratio learning control.
AIR COND RLY [ON/OFF]		○	• The air conditioner relay control condition (determined by ECM according to the input signal) is indicated.	
FUEL PUMP RLY [ON/OFF]		○	• Indicates the fuel pump relay control condition determined by ECM according to the input signals.	
SWRL CONT S/V [ON/OFF]		○	• The control condition of the swirl control valve control solenoid valve (determined by the ECM according to the input signal) is indicated. ON ... Swirl control valve is closed OFF ... Swirl control valve is open	
EGRC SOL/V (EVAP canister purge control solenoid valve) [ON/OFF]		○	• The control condition of the EVAP canister purge control solenoid valve (determined by ECM according to the input signal) is indicated. ON ... EVAP canister purge control is not operating OFF ... EVAP canister purge control is operational.	
VOLTAGE [V]			• Voltage measured by the voltage probe.	
PULSE [msec] or [Hz] or [%]			• Pulse width, frequency or duty cycle measured by the pulse probe.	• Only "#" is displayed if item is unable to be measured. • Figures with "#"s are temporary ones. They are the same figures as an actual piece of data which was just previously measured.

CONSULT (Cont'd)

ACTIVE TEST MODE

TEST ITEM	CONDITION	JUDGEMENT	CHECK ITEM (REMEDY)
FUEL INJECTION	● Engine: Return to the original trouble condition ● Change the amount of fuel injection using CONSULT.	If trouble symptom disappears, see CHECK ITEM.	● Harness and connector ● Fuel injectors ● Heated oxygen sensor
IACV-AAC/V OPENING	● Engine: After warming up, idle the engine. ● Change the IACV-AAC valve opening percent using CONSULT.	Engine speed changes according to the opening percent.	● Harness and connector ● IACV-AAC valve
ENG COOLANT TEMP	● Engine: Return to the original trouble condition ● Change the engine coolant temperature using CONSULT.	If trouble symptom disappears, see CHECK ITEM.	● Harness and connector ● Engine coolant temperature sensor ● Fuel injectors
IGNITION TIMING	● Engine: Return to the original trouble condition ● Timing light: Set ● Retard the ignition timing using CONSULT.	If trouble symptom disappears, see CHECK ITEM.	● Adjust ignition timing (by moving camshaft position sensor)
POWER BALANCE	● Engine: After warming up, idle the engine. ● A/C switch "OFF" ● Shift lever "N" ● Cut off each injector signal one at a time using CONSULT.	Engine runs rough or dies.	● Harness and connector ● Compression ● Injectors ● Ignition coil with power transistor ● Spark plugs
FUEL PUMP RELAY	● Ignition switch: ON (Engine stopped) ● Turn the fuel pump relay "ON" and "OFF" using CONSULT and listen to operating sound.	Fuel pump relay makes the operating sound.	● Harness and connector ● Fuel pump relay
EGRC SOLENOID VALVE (EVAP canister purge control solenoid valve)	● Ignition switch: ON ● Turn solenoid valve "ON" and "OFF" with CONSULT and listen to operating sound.	Solenoid valve makes an operating sound.	● Harness and connector ● EVAP canister purge control solenoid valve
SWIRL CONT SOL VALVE	● Ignition switch: ON (Engine stopped) ● Turn solenoid valve "ON" and "OFF" with CONSULT and listen to operating sound.	Solenoid valve makes an operating sound.	● Harness and connector ● Swirl control valve control solenoid valve
SELF-LEARNING CONT	● In this test, the coefficient of self- learning control mixture ratio returns to the original coefficient by touching "CLEAR" on the screen.		

CONSULT (Cont'd)

FUNCTION TEST MODE

FUNCTION TEST ITEM	CONDITION	JUDGEMENT		CHECK ITEM (REMEDY)
SELF-DIAG RESULTS	● Ignition switch: ON (Engine stopped) ● Displays the results of on board diagnostic system.	—		Objective system
CLOSED THROTTLE POSI	● Ignition switch: ON (Engine stopped) ● Throttle position sensor circuit is tested when throttle is opened and closed fully. ("IDLE POSITION" is the test item name for the vehicles in which idle is selected by throttle position sensor.)	Throttle valve: opened	OFF	● Harness and connector ● Throttle position sensor (Closed throttle position) ● Throttle position sensor (Closed throttle position) adjustment ● Throttle linkage ● Verify operation in DATA MONITOR mode.
		Throttle valve: closed	ON	
THROTTLE POSI SEN CKT	● Ignition switch: ON (Engine stopped) ● Throttle position sensor circuit is tested when throttle is opened and closed fully.	Range (Throttle valve fully opened — Throttle valve fully closed)	More than 3.0V	● Harness and connector ● Throttle position sensor ● Throttle position sensor adjustment ● Throttle linkage ● Verify operation in DATA MONITOR mode.
PARK/NEUT POSI SW CKT	● Ignition switch: ON (Engine stopped) ● Neutral position switch circuit is tested when shift lever is manipulated.	Out of N/P positions	OFF	● Harness and connector ● Neutral position switch ● Linkage adjustment
		In N/P positions	ON	
FUEL PUMP CIRCUIT	● Ignition switch: ON (Engine stopped) ● Fuel pump circuit is tested by checking the pulsation in fuel pressure when fuel tube is pinched.	There is pressure pulsation on the fuel feed hose.		● Harness and connector ● Fuel pump ● Fuel pump relay ● Fuel filter clogging ● Fuel level
EGRC SOL/V CIRCUIT (EVAP canister purge control solenoid valve circuit)	● Ignition switch: ON (Engine stopped) ● EVAP canister purge control solenoid valve circuit is tested by checking solenoid valve operating noise.	The solenoid valve makes an operating sound every 3 seconds.		● Harness and connector ● EVAP canister purge control solenoid valve
START SIGNAL CIRCUIT	● Ignition switch: ON → START ● Start signal circuit is tested when engine is started by operating the starter. Battery voltage and water temperature before cranking, and average battery voltage, mass air flow sensor output voltage and cranking speed during cranking are displayed.	Start signal: OFF → ON		● Harness and connector ● Ignition switch

CONSULT (Cont'd)

FUNCTION TEST ITEM	CONDITION	JUDGEMENT		CHECK ITEM (REMEDY)
PW/ST SIGNAL CIRCUIT	● Ignition switch: ON (Engine running) ● Power steering oil pressure switch circuit is tested when steering wheel is rotated fully and then set to a straight line running position.	Locked position	ON	● Harness and connector ● Power steering oil pressure switch ● Power steering oil pump
		Neutral position	OFF	
SWRL CONT S/V CIRCUIT	● Ignition switch: ON (Engine stopped) ● Swirl control valve control solenoid valve circuit is tested by checking solenoid valve operating sound.	The solenoid valve makes an operating sound every 3 seconds.		● Harness and connector ● Solenoid valve ● Swirl control valve ● Vacuum hose
VEHICLE SPEED SEN CKT	● Vehicle speed sensor circuit is tested when vehicle is running at a speed of 10 km/h (6 MPH) or higher.	Vehicle speed sensor input signal is greater than 4 km/h (2 MPH)		● Harness and connector ● Vehicle speed sensor ● Speedometer
IGN TIMING ADJ	● After warming up, idle the engine. ● Ignition timing is checked by reading ignition timing with a timing light and checking whether it agrees with specifications.	The timing light indicates the same value on the screen.		● Adjust ignition timing (by moving camshaft position sensor or distributor) ● Camshaft position sensor drive mechanism
MIXTURE RATIO TEST	● Air-fuel ratio feedback circuit (injection system, ignition system, vacuum system, etc.) is tested by examining the heated oxygen sensor output at 2,000 rpm under non-loaded state.	Heated oxygen sensor COUNT: More than 5 times during 10 seconds		● INJECTION SYS (Injector, fuel pressure regulator, harness or connector) ● IGNITION SYS (Spark plug, ignition coil, power transistor harness or connector) ● VACUUM SYS (Intake air leaks) ● Heated oxygen sensor circuit ● Heated oxygen sensor operation ● Fuel pressure high or low ● Mass air flow sensor
POWER BALANCE	● After warming up, idle the engine. ● Injector operation of each cylinder is stopped one after another, and resultant change in engine rotation is examined to evaluate combustion of each cylinder. (This is only displayed for models where a sequential multiport fuel injection system is used.)	Difference in engine speed is greater than 25 rpm before and after cutting off the injector of each cylinder.		● Injector circuit (Injector, harness or connector) ● Ignition circuit (Spark plug, ignition coil, power transistor harness or connector) ● Compression ● Valve timing
IACV-AAC/V SYSTEM	● After warming up, idle the engine. ● IACV-AAC valve system is tested by detecting change in engine speed when IACV-AAC valve opening is changed to 0%, 20% and 80%.	Difference in engine speed is greater than 150 rpm between when valve opening is at 80% and at 20%.		● Harness and connector ● IACV-AAC valve ● Air passage restriction between air inlet and IACV-AAC valve ● IAS (Idle adjusting screw) adjustment

CONSULT (Cont'd)

REAL TIME DIAGNOSIS IN DATA MONITOR MODE

CONSULT has two kinds of triggers and they can be selected by touching "SETTING" in "DATA MONITOR" mode.

1. "AUTO TRIG" (Automatic trigger):
   - The malfunction will be identified on the CONSULT screen in real time.
     In other words, malfunction item will be displayed at the moment the malfunction is detected by ECM. DATA MONITOR can be performed continuously until a malfunction is detected. However, DATA MONITOR cannot continue any longer after the malfunction detection.
2. "MANU TRIG" (Manual trigger):
   - Malfunction item will not be displayed automatically on CONSULT screen even though a malfunction is detected by ECM.
     DATA MONITOR can be performed continuously even though a malfunction is detected.

Use these triggers as follows:

1. "AUTO TRIG"
   - While trying to detect the DTC by performing the "DTC CONFIRMATION PROCEDURE", be sure to select to "DATA MONITOR (AUTO TRIG)" mode. You can confirm the malfunction at the moment it is detected.
   - While narrowing down the possible causes, CONSULT should be set in "DATA MONITOR (AUTO TRIG)" mode, especially in case the incident is intermittent.
     When you are inspecting the circuit by gently shaking (or twisting) the suspicious connectors, components and harness in the "DTC CONFIRMATION PROCEDURE", the moment a malfunction is found the malfunction item will be displayed. (Refer to GI section, "Incident Simulation Tests" in "HOW TO PERFORM EFFICIENT DIAGNOSIS FOR AN ELECTRICAL INCIDENT".)
2. "MANU TRIG"
   - If the malfunction is displayed as soon as "DATA MONITOR" is selected, reset CONSULT to "MANU TRIG". By selecting "MANU TRIG" you can monitor and store the data. The data can be utilized for further diagnosis, such as a comparison with the value for the normal operating condition.

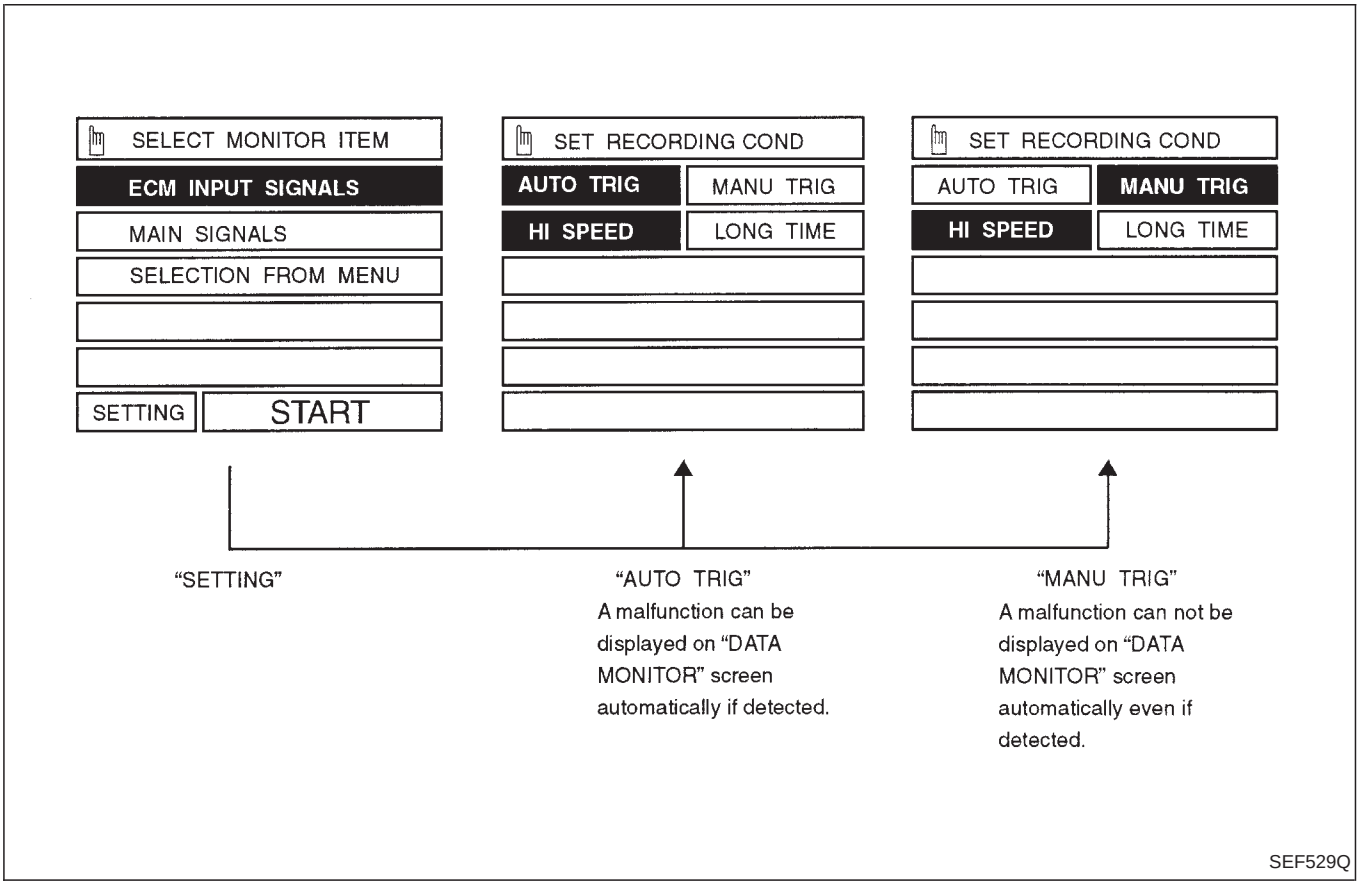

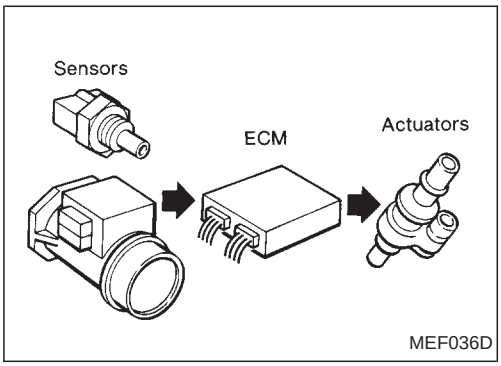

MEF036D

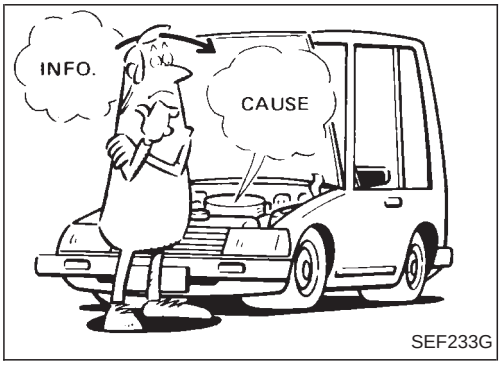

SEF233G

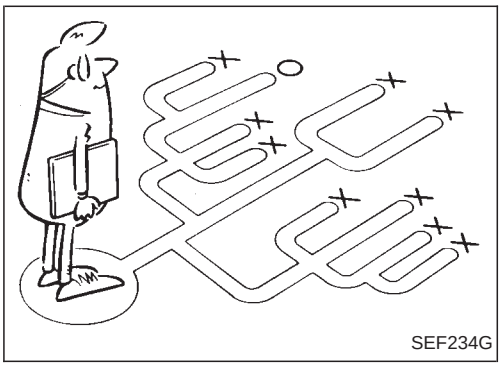
SEF234G

KEY POINTS

WHAT ..... Vehicle & engine model
WHEN ..... Date, Frequencies
WHERE..... Road conditions
HOW ..... Operating conditions, Weather conditions, Symptoms

SEF907L

Introduction

The engine has an ECM to control major systems such as fuel control, ignition control, idle air control system, etc. The ECM accepts input signals from sensors and instantly drives actuators. It is essential that both input and output signals are proper and stable. At the same time, it is important that there are no problems such as vacuum leaks, fouled spark plugs, or other problems with the engine.

It is much more difficult to diagnose a problem that occurs intermittently rather than continuously. Most intermittent problems are caused by poor electric connections or improper wiring. In this case, careful checking of suspected circuits may help prevent the replacement of good parts.

A visual check only may not find the cause of the problems. A road test with CONSULT or a circuit tester connected should be performed. Follow the “Work Flow” on EC-56.

Before undertaking actual checks, take just a few minutes to talk with a customer who approaches with a driveability complaint. The customer can supply good information about such problems, especially intermittent ones. Find out what symptoms are present and under what conditions they occur. A “Diagnostic Worksheet” like the example on next page should be used.

Start your diagnosis by looking for “conventional” problems first. This will help troubleshoot driveability problems on an electronically controlled engine vehicle.

Diagnostic Worksheet

There are many operating conditions that lead to the malfunctions of engine components. A good knowledge of such conditions can make troubleshooting faster and more accurate.

In general, each customer may feel differently about a given problem. It is important to fully understand the symptoms or conditions for a customer complaint.

Utilize a diagnostic worksheet like the one on next page in order to organize all the information for troubleshooting.

Diagnostic Worksheet (Cont'd)

WORKSHEET SAMPLE

Customer name MR/MS		Model & Year	VIN
Engine #		Trans.	Mileage
Incident Date		Manuf. Date	In Service Date
Fuel and fuel filler cap		☐ Vehicle ran out of fuel causing misfire. ☐ Fuel filler cap was left off or incorrectly screwed on.	
Symptoms	☐ Startability	☐ Impossible to start ☐ No combustion ☐ Partial combustion ☐ Partial combustion affected by throttle position ☐ Partial combustion NOT affected by throttle position ☐ Possible but hard to start ☐ Others [ ]	
	☐ Idling	☐ No fast idle ☐ Unstable ☐ High idle ☐ Low idle ☐ Others [ ]	
	☐ Driveability	☐ Stumble ☐ Surge ☐ Knock ☐ Lack of power ☐ Intake backfire ☐ Exhaust backfire ☐ Others [ ]	
	☐ Engine stall	☐ At the time of start ☐ While idling ☐ While accelerating ☐ While decelerating ☐ Just after stopping ☐ While loading	
Incident occurrence		☐ Just after delivery ☐ Recently ☐ In the morning ☐ At night ☐ In the daytime	
Frequency		☐ All the time ☐ Under certain conditions ☐ Sometimes	
Weather conditions		☐ Not affected	
	Weather	☐ Fine ☐ Raining ☐ Snowing ☐ Others [ ]	
	Temperature	☐ Hot ☐ Warm ☐ Cool ☐ Cold ☐ Humid °F	
Engine conditions		☐ Cold ☐ During warm-up ☐ After warm-up Engine speed 0 2,000 4,000 6,000 8,000 rpm	
Road conditions		☐ In town ☐ In suburbs ☐ Highway ☐ Off road (up/down)	
Driving conditions		☐ Not affected ☐ At starting ☐ While idling ☐ At racing ☐ While accelerating ☐ While cruising ☐ While decelerating ☐ While turning (RH/LH) Vehicle speed 0 10 20 30 40 50 60 MPH	
Malfunction indicator lamp		☐ Turned on ☐ Not turned on	

Work Flow

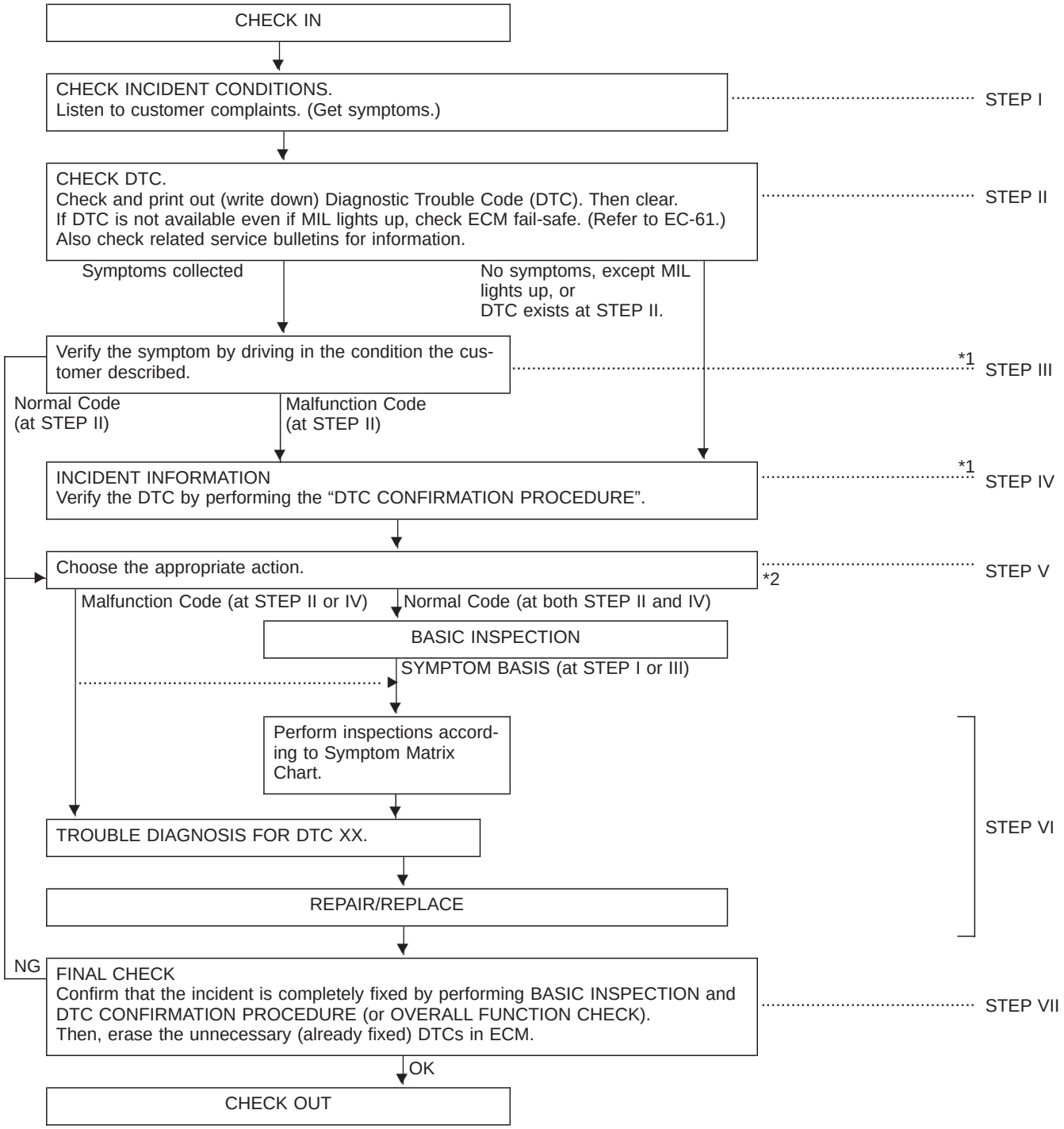

***1: If the incident cannot be duplicated, see "Incident Simulation Tests" of "HOW TO PERFORM EFFICIENT DIAGNOSIS FOR AN ELECTRICAL INCIDENT" in GI section.**

***2: If the on board diagnostic system cannot be performed, check main power supply and ground circuit (See TROUBLE DIAGNOSIS FOR POWER SUPPLY, EC-74).**

Description for Work Flow

STEP	DESCRIPTION
STEP I	Get detailed information about the conditions and the environment when the incident/symptom occurred using the “DIAGNOSTIC WORK SHEET”, EC-54.
STEP II	Before confirming the concern, check and write down (print out using CONSULT) the Diagnostic Trouble Code (DTC), then erase the code. (Refer to EC-37.) The DTC can be used when duplicating the incident at STEP III & IV. Study the relationship between the cause, specified by DTC, and the symptom described by the customer. (The “Symptom Matrix Chart” will be useful. See page EC-62.) Also check related service bulletins for information.
STEP III	Try to confirm the symptom and under what conditions the incident occurs. The “DIAGNOSTIC WORK SHEET” is useful to verify the incident. Connect CONSULT to the vehicle in DATA MONITOR (AUTO TRIG) mode and check real time diagnosis results. If the incident cannot be verified, perform INCIDENT SIMULATION TESTS. (Refer to GI section.) If the malfunction code is detected, skip STEP IV and perform STEP V.
STEP IV	Try to detect the Diagnostic Trouble Code by driving in (or performing) the “DTC CONFIRMATION PROCEDURE”. Check and read the DTC by using CONSULT. During the DTC verification, be sure to connect CONSULT to the vehicle in DATA MONITOR (AUTO TRIG) mode and check real time diagnosis results. If the incident cannot be verified, perform INCIDENT SIMULATION TESTS. (Refer to GI section.) In case the “DTC CONFIRMATION PROCEDURE” is not available, perform the “OVERALL FUNCTION CHECK” instead. The DTC cannot be displayed by this check, however, this simplified “check” is an effective alternative. The “NG” result of the “OVERALL FUNCTION CHECK” is the same as the DTC detection.
STEP V	Take the appropriate action based on the results of STEP I through IV. If the malfunction code is indicated, proceed to TROUBLE DIAGNOSIS FOR DTC XX. If the normal code is indicated, proceed to the BASIC INSPECTION on next page. Then perform inspections according to the Symptom Matrix Chart. (Refer to EC-62.)
STEP VI	Identify where to begin diagnosis based on the relationship study between symptom and possible causes. Inspect the system for mechanical binding, loose connectors or wiring damage using (tracing) “Harness Layouts”. Gently shake the related connectors, components or wiring harness with CONSULT set in “DATA MONITOR (AUTO TRIG)” mode. Check the voltage of the related ECM terminals or monitor the output data from the related sensors with CONSULT. Refer to EC-64, EC-68. The “DIAGNOSTIC PROCEDURE” in EC section contains a description based on open circuit inspection. A short circuit inspection is also required for the circuit check in the DIAGNOSTIC PROCEDURE. For details, refer to GI section (“HOW TO PERFORM EFFICIENT DIAGNOSIS FOR AN ELECTRICAL INCIDENT”, “Circuit Inspection”). Repair or replace the malfunction parts.
STEP VII	Once you have repaired the circuit or replaced a component, you need to run the engine in the same conditions and circumstances which resulted in the customer’s initial complaint. Perform the “DTC CONFIRMATION PROCEDURE” and confirm the normal code (Diagnostic trouble code No. 55) is detected. If the incident is still detected in the final check, perform STEP VI by using a different method from the previous one. Before returning the vehicle to the customer, be sure to erase the unnecessary (already fixed) DTC in ECM. (Refer to EC-37.)

A

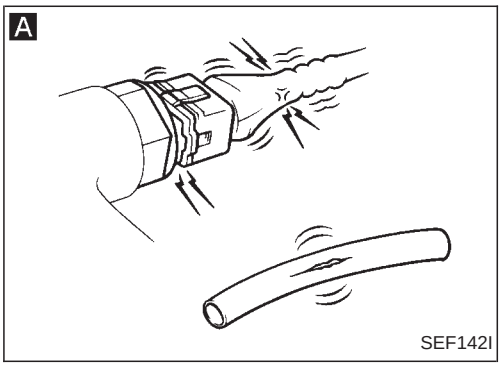

SEF142I

B

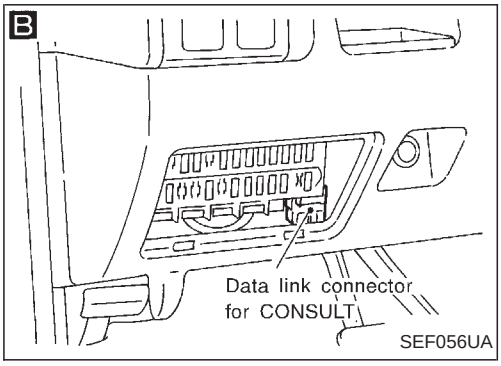

SEF056UA

C

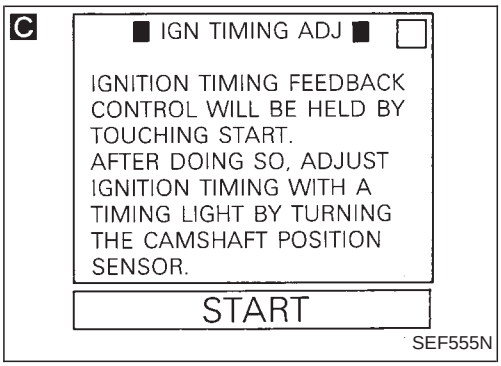

SEF555N

C

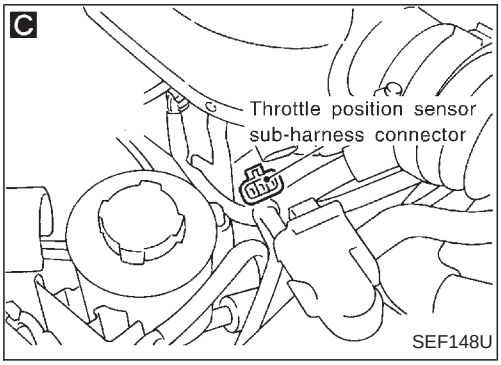

SEF148U

C

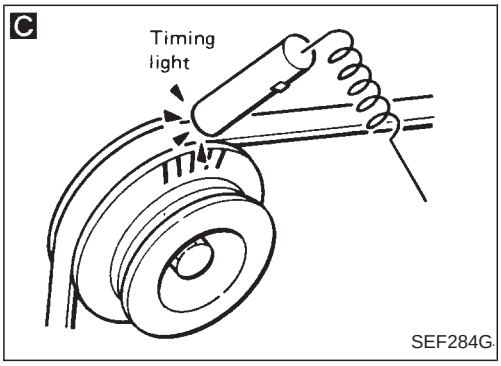

SEF284G

Basic Inspection

Precaution:
Perform Basic Inspection without electrical or mechanical loads applied;

- **Headlamp switch is OFF,**
- **Air conditioner switch is OFF,**
- **Rear window defogger switch is OFF,**
- **Steering wheel is in the straight-ahead position, etc.**

A

BEFORE STARTING

1. Check service records for any recent repairs that may indicate a related problem, or the current need for scheduled maintenance.
2. Open engine hood and check the following:

- Harness connectors for improper connections
- Vacuum hoses for splits, kinks, or improper connections
- Wiring for improper connections, pinches, or cuts

↓

B

CONNECT CONSULT TO THE VEHICLE.
Connect “CONSULT” to the data link connector for CONSULT and select “ENGINE” from the menu. Refer to EC-45.

↓

C

CHECK IGNITION TIMING.

1. Warm up engine sufficiently.
2. Select “IGN TIMING ADJ” in “WORK SUPPORT” mode.
3. Touch “START”.
4. Check ignition timing at idle using timing light.
   Ignition timing:
   10°±2° BTDC

NG → Adjust ignition timing by turning camshaft position sensor.

1. Warm up engine sufficiently.
2. Stop engine and disconnect throttle position sensor sub-harness connector.
3. Start engine.
4. Check ignition timing at idle using timing light.
   Ignition timing:
   10°±2° BTDC

OK ↓

Ⓐ
(Go to next page.)

Basic Inspection (Cont'd)

D

■ IGN TIMING ADJ ■

IGNITION TIMING FEEDBACK CONTROL WILL BE HELD BY TOUCHING START.
AFTER DOING SO, ADJUST IGNITION TIMING WITH A TIMING LIGHT BY TURNING THE CAMSHAFT POSITION SENSOR.

START

SEF546N

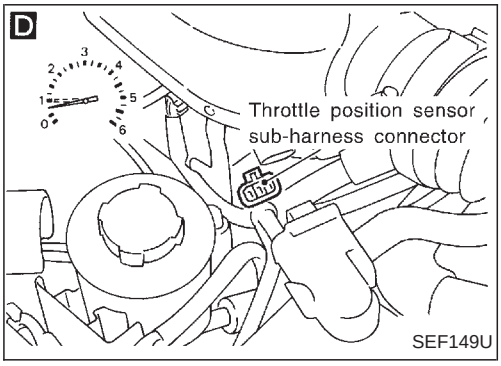

Ⓐ

D

CHECK IDLE SPEED ADJ. SCREW INITIAL SET RPM (BASE IDLE SPEED).

1. Select "IGN TIMING ADJ" in "WORK SUPPORT" mode.
2. When touching "START", does engine speed fall to 750±25 rpm?

OR

When disconnecting throttle position sensor sub-harness connector, does engine run at 750±25 rpm?

NG → Adjust base idle speed by turning idle speed adjusting screw.

OK ↓

CHECK THROTTLE POSITION SENSOR IDLE POSITION.

1. Perform "THRTL POS SEN ADJ" in "WORK SUPPORT" mode.
2. Check output voltage of throttle position sensor.
   Voltage: 0.35 - 0.65V

OR

1. Reconnect throttle position sensor sub-harness connector.
2. Check output voltage between throttle position sensor terminal ② and ground with voltmeter.
   Voltage: 0.35 - 0.65V

NG → Adjust output voltage to 0.5V by rotating throttle position sensor body.

↓

RESET IDLE POSITION MEMORY.

1. Disconnect throttle position sensor sub-harness connector.
2. Warm up engine sufficiently.
3. Select "CLSD THL/POSI" in "DATA MONITOR" mode (Manual trigger) with CONSULT, then stop engine.
4. Reconnect throttle position sensor sub-harness connector.
5. Start engine and wait for a few seconds.
6. Turn ignition switch "OFF" and wait at least 5 seconds.
7. Repeat steps 5. and 6. until "CLSD THL/POSI" in "DATA MONITOR" mode with CONSULT changes to "ON".

   Repeat steps 5. and 6. 10 times.

OK ↓

Ⓑ

(Go to next page.)

Basic Inspection (Cont'd)

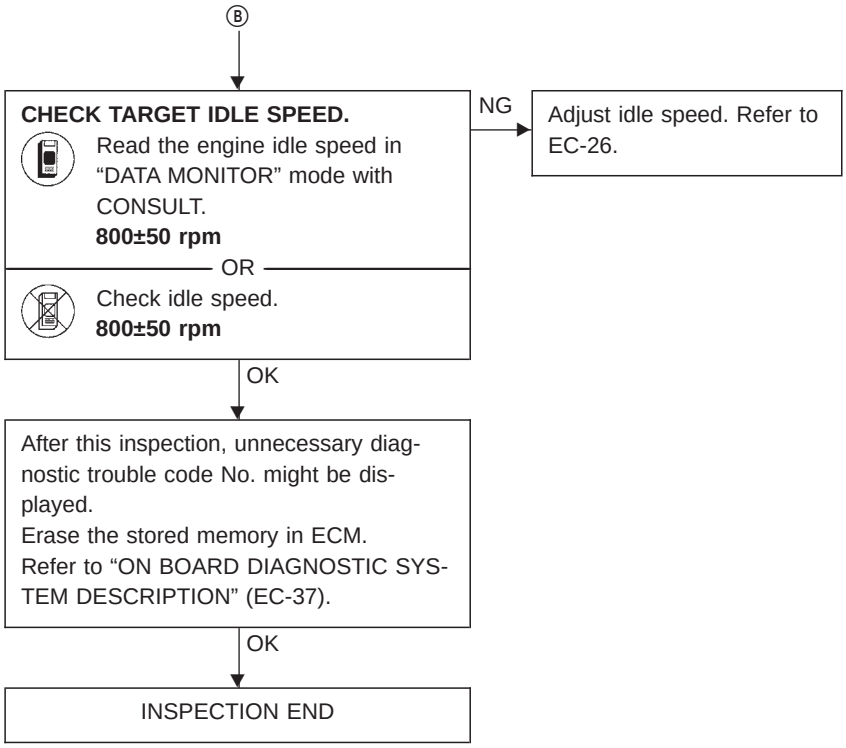

Fail-Safe Chart

The ECM enters fail-safe mode, if any of the following malfunctions are detected due to the open or short circuit.
When the ECM enters the ECM fail-safe mode listed in the last column below, the MIL illuminates.

DTC No.	Detected items	Engine operating condition in fail-safe mode
12	Mass air flow sensor circuit	Engine speed will not rise more than 2,400 rpm due to the fuel cut.
13	Engine coolant temperature sensor circuit	Engine coolant temperature will be determined by ECM based on the time after turning ignition switch "ON" or "START". CONSULT displays the engine coolant temperature decided by ECM. Condition / Engine coolant temperature decided (CONSULT display) Just as ignition switch is turned ON or START / 20°C (68°F) More than 6 minutes after ignition START / 80°C (176°F) Except as shown above / 20 - 80°C (68 - 176°F) (Depends on the time)
41	Intake air temperature sensor circuit	The ECM controls on the assumption that the intake air temperature is 20°C (68°F).
43	Throttle position sensor circuit	Throttle position will be determined based on the amount of mass air flow and the engine speed. Therefore, acceleration will be poor. Driving condition When engine is idling / Normal When accelerating / Poor acceleration
Unable to access Diagnostic Test Mode II	ECM	**ECM fail-safe activating condition** The computing function of the ECM was judged to be malfunctioning. When the fail-safe system activates, i.e. if the ECM detects a malfunction condition in the CPU of ECM, the MALFUNCTION INDICATOR LAMP on the instrument panel lights to warn the driver. However, it is not possible to access ECCS and DTC cannot be confirmed. **Engine control with ECM fail-safe** When the fail-safe system is operating, fuel injection, ignition timing, fuel pump operation and IACV-AAC valve operation are controlled under certain limitations. ECM fail-safe operation **Engine speed** / **Engine speed will not rise more than 3,000 rpm.** Fuel injection / Simultaneous multiport fuel injection system Ignition timing / Ignition timing is fixed at the preset value. Fuel pump / Fuel pump relay is "ON" when engine is running and "OFF" when engine stalls. IACV-AAC valve / Full open Replace ECM, if ECM fail-safe condition is confirmed.

Symptom Matrix Chart

			SYMPTOM															Reference page
			HARD/NO START/RESTART (EXCP. HA)	ENGINE STALL	HESITATION/SURGING/FLAT SPOT	SPARK KNOCK/DETONATION	LACK OF POWER/POOR ACCELERATION	HIGH IDLE/LOW IDLE	ROUGH IDLE/HUNTING	IDLING VIBRATION	SLOW/NO RETURN TO IDLE	OVERHEATS/WATER TEMPERATURE HIGH	EXCESSIVE FUEL CONSUMPTION	EXCESSIVE OIL CONSUMPTION	BATTERY DEAD (UNDER CHARGE)	OVERCOOLS	OVERCHARGING	
Warranty Symptom Code			AA	AB	AC	AD	AE	AF	AG	AH	AJ	AK	AL	AM	HA	1P	1X	
Basic engine control system	Fuel	Fuel pump circuit	●	●	●	○	●		●	○			○		○			EC-150
		Fuel pressure regulator system	●	●	●	○	●	○	●	●	○		●					EC-23
		Injector circuit	●	●	●	○	●		●	●			●					EC-143
		Evaporative emission system	○	○	○	○	●	○	○	○	○		○					EC-20
	Air	Positive crankcase ventilation system	○	○	○	○	●	○	○	○	○		○	○				EC-22
		Incorrect idle speed adjustment	○	○				○	○	○	○		○					EC-26
		Swirl control valve circuit		○	○					●								EC-160
		IACV-AAC valve circuit	●	●	●	○	●	●	●	●	●		○		○			EC-130
		IACV-FICD solenoid valve circuit	○	○	○	○	○	○	○	○	○		○					EC-167
	Ignition	Incorrect ignition timing adjustment	○	○	●	●	●		●	●			●					EC-26
		Ignition circuit	●	●	●	●	●		●	●			●					EC-98
	EVAP	EVAP canister purge control solenoid valve circuit	●	○	○	○	○		○				○					EC-139
	Main power supply and ground circuit		●	●	●	○	○		○	○		○	○		○			EC-74
	Air conditioner circuit		○	○	○	○	○	○	○	○	○		○		○			HA section
ECCS system	ECCS	Camshaft position sensor circuit	●	●	●	●	●		○	○			○					EC-81
		Mass air flow sensor circuit	●	●	●	●	●		●	○			○					EC-88
		Heated oxygen sensor circuit		●	●	○	●		●	○			●					EC-122, 126
		Engine coolant temperature sensor circuit	●	●	●	○	●	●	●	○	○		●					EC-94
		Throttle position sensor circuit		●	●		●	●	●	●	●		●					EC-112
		Incorrect throttle position sensor adjustment		●	○		○	●	○	○	●		○					EC-58
		Vehicle speed sensor circuit		○	○		○						○					EC-117
		ECM	○	○	○	○	○	○	○	○	○	○	○					EC-61
		Start signal circuit	○															EC-148
		Neutral position switch circuit			○		○		○	○			○					EC-135
		Power steering oil pressure switch circuit		○					○	○								EC-156

● ; High Possibility Item
○; Low Possibility Item

(continued on next page)

Symptom Matrix Chart (Cont'd)

SYSTEM — Engine mechanical & other		SYMPTOM															Reference page
		HARD/NO START/RESTART (EXCP. HA)	ENGINE STALL	HESITATION/SURGING/FLAT SPOT	SPARK KNOCK/DETONATION	LACK OF POWER/POOR ACCELERATION	HIGH IDLE/LOW IDLE	ROUGH IDLE/HUNTING	IDLING VIBRATION	SLOW/NO RETURN TO IDLE	OVERHEATS/WATER TEMPERATURE HIGH	EXCESSIVE FUEL CONSUMPTION	EXCESSIVE OIL CONSUMPTION	BATTERY DEAD (UNDER CHARGE)	OVERCOOLS	OVERCHARGING	
Warranty Symptom Code		AA	AB	AC	AD	AE	AF	AG	AH	AJ	AK	AL	AM	HA	1P	1X	
Fuel	Fuel tank	●	●														—
	Fuel piping	●	●	○	○	●		○	○			○					
	Vapor lock		○														
	Valve deposit	○	○	○	○	○		○	○			○					
	Poor fuel (Heavy weight gasoline, Low octane)	○	○	○	○	○		○	○			○					
Air	Air duct		○	○		○		○	○			○					
	Air cleaner		○	●		●		●	○			○					
	Air leakage from air duct (Mass air flow sensor — throttle body)	○	○	○	○	○	○	○	○	○		○					
	Throttle body, Throttle wire	○	●	●		○	●	●	○	○		○					FE section
	Air leakage from intake manifold/ Collector/Gasket	○	●	○	○	○	○	●	○	○		●					—
Cranking	Battery	○	○	○		○		○	○			○		○		○	EL section
	Alternator circuit	○	○	○		○		○	○			○		○		○	
	Starter circuit	●															
	Flywheel	●															—
Engine	Cylinder head	●	○	●	○	○		●	○			○					—
	Cylinder head gasket	○	○	○	○	○		●	○		●	○	○				
	Cylinder block	○	○	○	○	●		○	○			○	○				
	Piston	○	○	○	○	○		○	●			○	●				
	Piston ring	○	○	○	○	●		●	○			○	●				
	Connecting rod	●	○	○	○	○		○	○			○					
	Bearing	●	●	○	●	○		○	●			○					
	Crankshaft	○	○	○	○	○		○	○			○					
Valve mechanism	Timing chain	●	○	●	○	●		○	○			○					
	Camshaft	●	○	○	○	○		○	○			○					
	Intake valve	○	●	●	○	○		●	○			○	○				
	Exhaust valve	●	○	●	○	●		●	○			○	●				
Exhaust	Exhaust manifold/Tube/Muffler/Gasket	○	●	●	●	●		●	○			●					
	Three way catalyst	○	●	○	○	●		○	○			○					
Lubrication	Oil pan/Oil strainer/Oil pump/Oil filter/Oil gallery	●	○	○	●	●		○	○			○	●				
	Oil level (Low)/Filthy oil	○	○	○	○	○		○	○			○	○				
Cooling	Radiator/Hose/Radiator filler cap	○	○	○	○	○		○	○		●	○					
	Thermostat	○	○	○	○	○	○	●	○	○	●	○			○		
	Water pump	●	○	○	○	○		○	○		●	○					
	Water gallery	○	○	○	○	○		○	○		○	○					
	Cooling fan	○	○	○	○	●	○	●	○	○	●	○			○		
	Coolant level (low)/Contaminated coolant	○	○	○	○	○		○	○		○	○					

● ; High Possibility Item
○; Low Possibility Item

CONSULT Reference Value in Data Monitor Mode

Remarks:

- Specification data are reference values.
- Specification data are output/input values which are detected or supplied by the ECM at the connector.
  * Specification data may not be directly related to their components signals/values/operations.
  i.e. Adjust ignition timing with a timing light before monitoring IGN TIMING, because the monitor may show the specification data in spite of the ignition timing not being adjusted to the specification data. This IGN TIMING monitors the data calculated by the ECM according to the signals input from the camshaft position sensor and other ignition timing related sensors.
- If the real-time diagnosis results are NG and the on board diagnostic system results are OK when diagnosing the mass air flow sensor, first check to see if the fuel pump control circuit is normal.

MONITOR ITEM	CONDITION		SPECIFICATION
CMPS·RPM (POS)	• Tachometer: Connect • Run engine and compare tachometer indication with the CONSULT value.		Almost the same speed as the CONSULT value.
MAS AIR/FL SE	• Engine: After warming up • Air conditioner switch: “OFF” • Shift lever: Neutral position • No-load	Idle	1.3 - 1.7V
		2,500 rpm	1.7 - 2.1V
COOLAN TEMP/S	• Engine: After warming up		More than 70°C (158°F)
O2 SEN	• Engine: After warming up	Maintaining engine speed at 2,000 rpm	0 - 0.3V ↔ 0.6 - 1.0V
M/R F/C MNTR			LEAN ↔ RICH Changes more than 5 times during 10 seconds.
VHCL SPEED SE	• Turn drive wheels and compare speedometer indication with the CONSULT value		Almost the same speed as the CONSULT value
BATTERY VOLT	• Ignition switch: ON (Engine stopped)		11 - 14V
THRTL POS SEN	• Ignition switch: ON (Engine stopped)	Throttle valve: fully closed	0.35 - 0.65V
		Throttle valve: fully opened	Approx. 4.0V
START SIGNAL	• Ignition switch: ON → START → ON		OFF → ON → OFF
CLSD THL/POSI	• Ignition switch: ON (Engine stopped)	Throttle valve: Idle position	ON
		Throttle valve: Slightly open	OFF
AIR COND SIG	• Engine: After warming up, idle the engine	Air conditioner switch: “OFF”	OFF
		Air conditioner switch: “ON” (Compressor operates.)	ON
P/N POSI SW	• Ignition switch: ON	Shift lever: Neutral position	ON
		Except above	OFF
PW/ST SIGNAL	• Engine: After warming up, idle the engine	Steering wheel in neutral position (forward direction)	OFF
		The steering wheel is turned	ON

CONSULT Reference Value in Data Monitor Mode (Cont'd)

MONITOR ITEM	CONDITION		SPECIFICATION
INJ PULSE	• Engine: After warming up • Air conditioner switch: "OFF" • Shift lever: Neutral position • No-load	Idle	2.4 - 3.2 msec.
		2,000 rpm	1.9 - 3.2 msec.
IGN TIMING	ditto	Idle	10° BTDC
		2,000 rpm	More than 25° BTDC
IACV-AAC/V	ditto	Idle	20 - 40%
		2,000 rpm	—
A/F ALPHA	• Engine: After warming up	Maintaining engine speed at 2,000 rpm	65 - 140%
AIR COND RLY	• Air conditioner switch: OFF → ON		OFF → ON
FUEL PUMP RLY	• Ignition switch is turned to ON (Operates for 5 seconds) • Engine running and cranking • When engine is stopped (Stops in 1 second)		ON
	Except as shown above		OFF
SWRL CONT S/V	• Engine is running at a speed of less than 3,600 rpm.		ON
	• Except above		OFF
EGRC SOL/V	• Engine: After warming up • Air conditioner switch: OFF • Shift lever: Neutral position • No-load	Idle	OFF
		Above 3,800 rpm	ON

Major Sensor Reference Graph in Data Monitor Mode

The following are the major sensor reference graphs in “DATA MONITOR” mode.
(Select “HI SPEED” in “DATA MONITOR” with CONSULT.)

THRTL POS SEN, CLSD THL/POSI

Below is the data for “THRTL POS SEN” and “CLSD THL/POSI” when depressing the accelerator pedal with the ignition switch “ON”.
The signal of “THRTL POS SEN” should rise gradually without any intermittent drop or rise after “CLSD THL/POSI” is changed from “ON” to “OFF”.

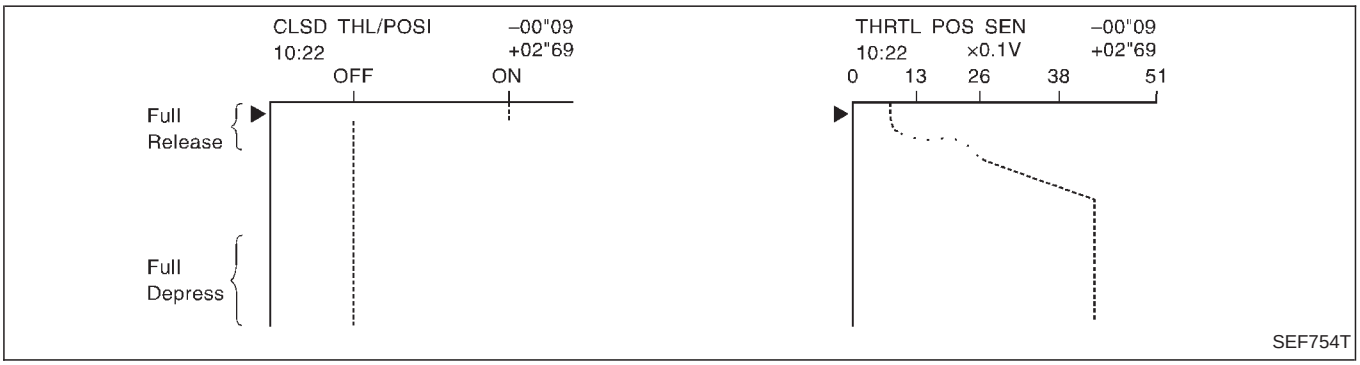

CMPS·RPM (POS), MAS AIR/FL SE, THRTL POS SEN, O2 SEN, INJ PULSE

Below is the data for “CMPS·RPM (POS)”, “MAS AIR/FL SE”, “THRTL POS SEN”, “O2 SEN” and “INJ PULSE” when revving engine quickly up to 4,800 rpm under no load after warming up engine sufficiently.
Each value is for reference, the exact value may vary.

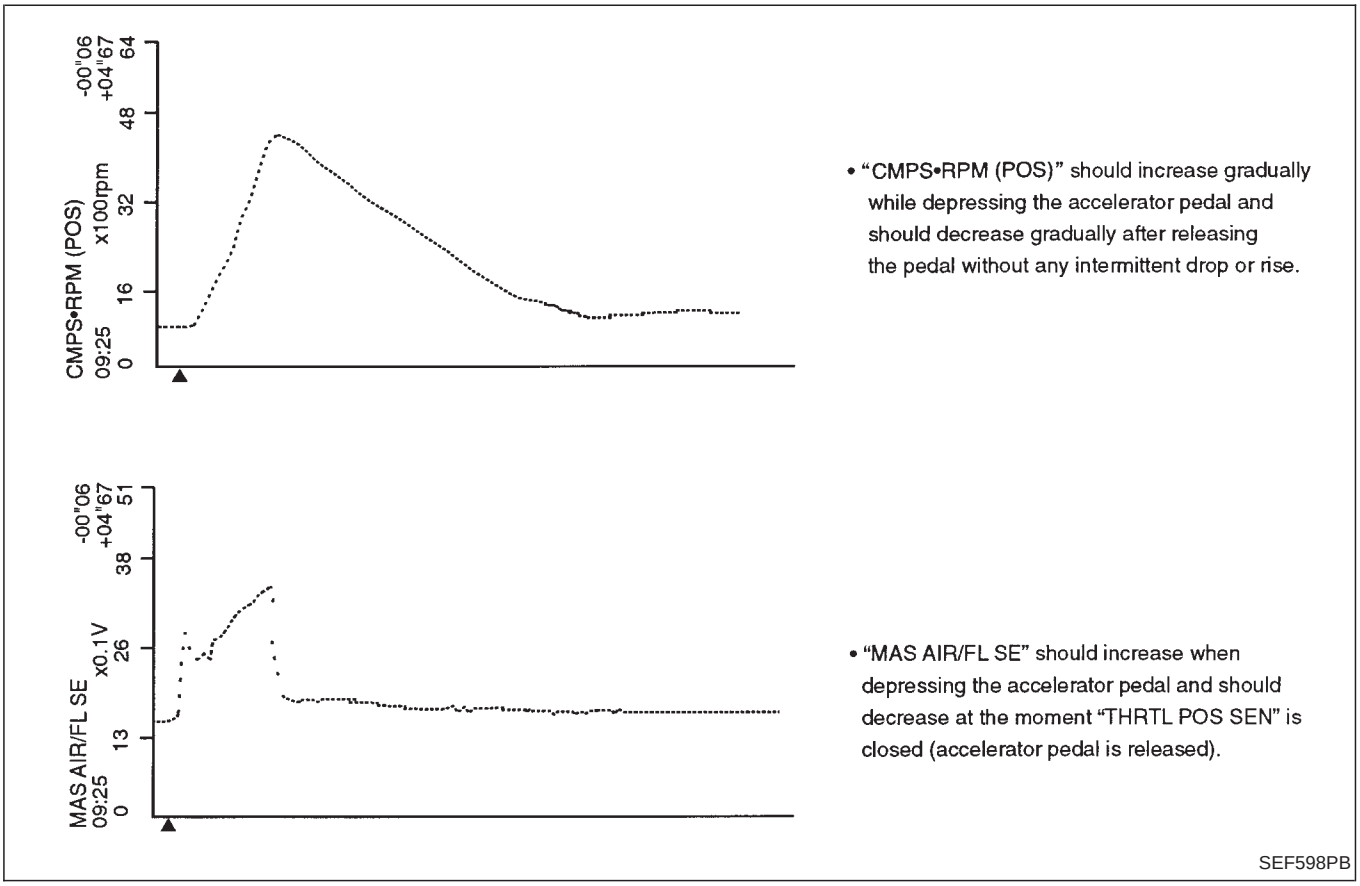

Major Sensor Reference Graph in Data Monitor Mode (Cont'd)

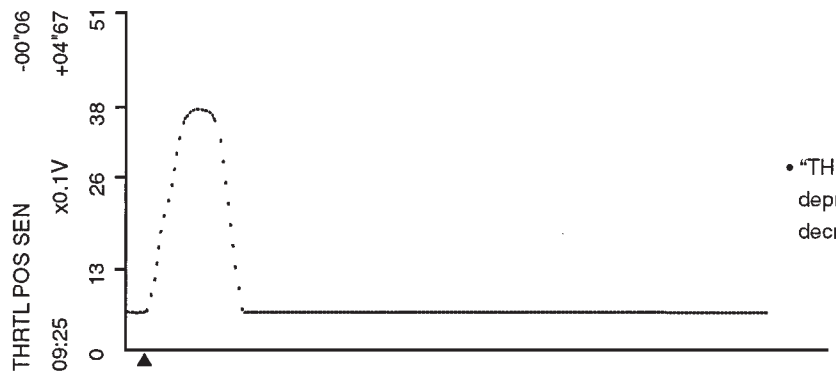

• "THRTL POS SEN" should increase while depressing the accelerator pedel and should decrease while releasing it.

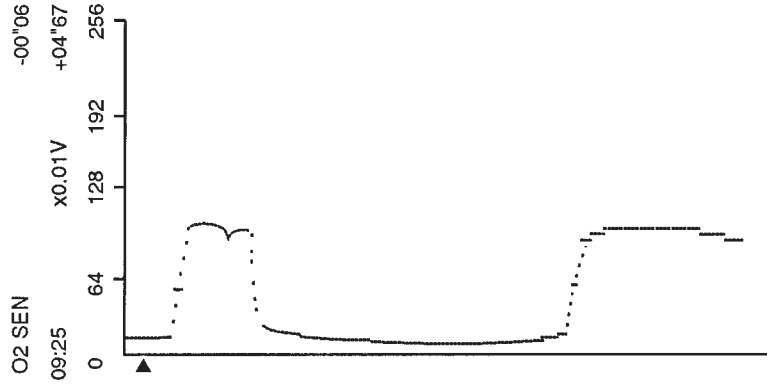

• "O2 SEN" may increase immediately after depressing the accelerator pedel and may decrease after releasing the pedal.

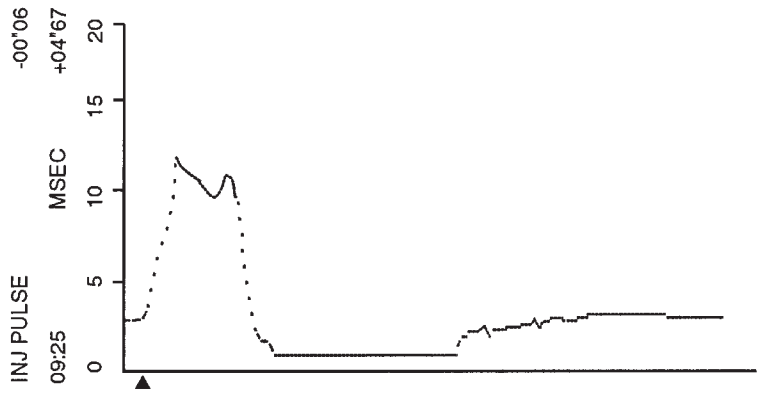

• "INJ PULSE" should increase when depressing the accelerator pedal and should decrease when the pedal is released.

SEF259QA

ECM Terminals and Reference Value

PREPARATION

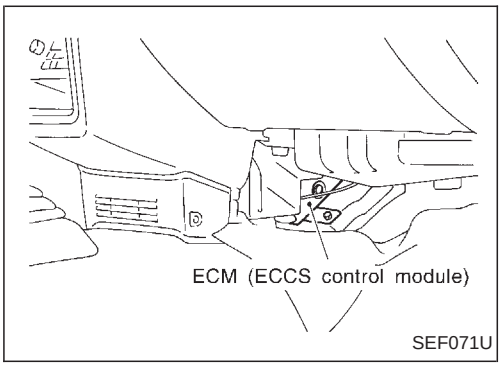

1. ECM is located behind the instrument lower panel.

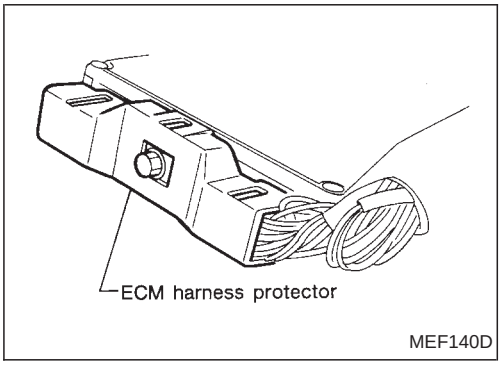

2. Remove ECM harness protector.

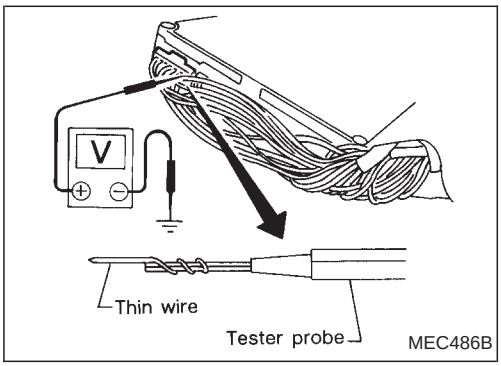

3. Perform all voltage measurements with the connectors connected. Extend tester probe as shown to perform tests easily.

ECM HARNESS CONNECTOR TERMINAL LAYOUT

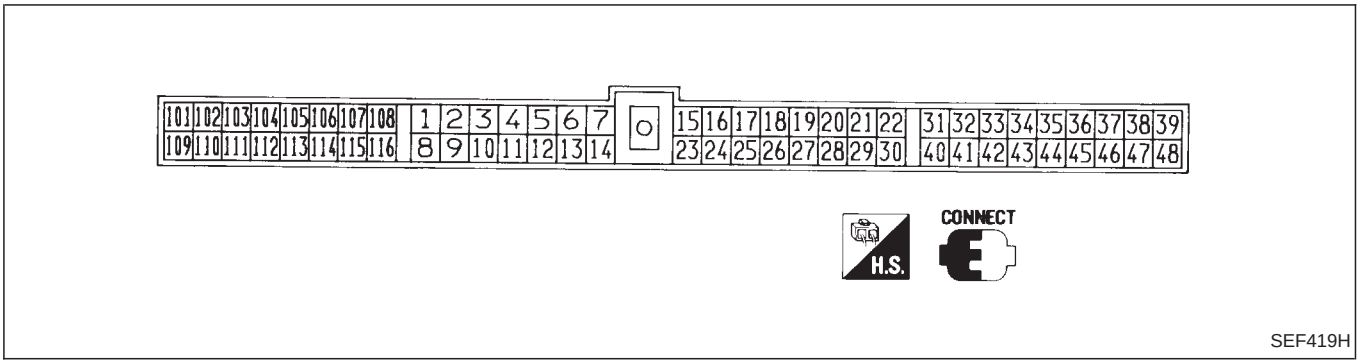

ECM Terminals and Reference Value (Cont'd)

ECM INSPECTION TABLE

Remarks: Specification data are reference values, and are measured between each terminal and ㊴ (ECCS ground) with a voltmeter.

TERMINAL NO.	WIRE COLOR	ITEM	CONDITION	DATA (DC voltage)
1	W/PU	Ignition signal	Engine is running. └ Idle speed	Approximately 0.3V 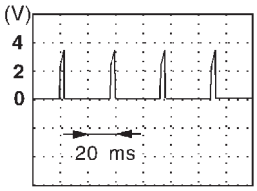 SEF058U
			Engine is running. └ Engine speed is 2,000 rpm.	Approximately 0.7V 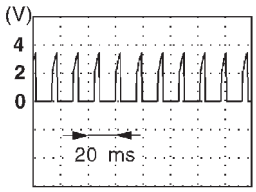 SEF059U
2	W	Tachometer (Models with tachometer)	Engine is running. └ Idle speed	Approximately 0.7V 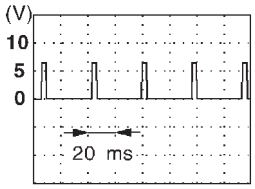 SEF060U
			Engine is running. └ Engine speed is 2,000 rpm.	Approximately 1.6V 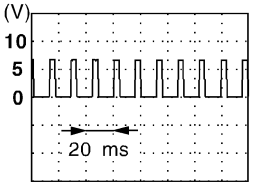 SEF061U
3	W/G	Ignition check	Engine is running. └ Idle speed	Approximately 13V 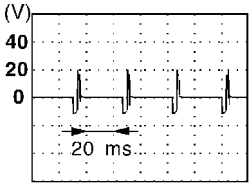 SEF062U
			Engine is running. └ Engine speed is 2,000 rpm.	Approximately 13V 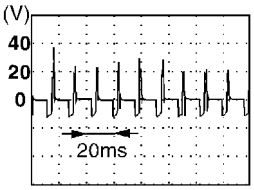 SEF063U

ECM Terminals and Reference Value (Cont'd)

TERMINAL NO.	WIRE COLOR	ITEM	CONDITION	DATA (DC voltage)
4	L/R	ECCS relay (Self-shutoff)	Engine is running. Ignition switch "OFF" └ For a few seconds after turning ignition switch "OFF"	0 - 1V
			Ignition switch "OFF" └ A few seconds passed after turning ignition switch "OFF"	BATTERY VOLTAGE (11 - 14V)
6	B/P	ECCS ground	Engine is running. └ Idle speed	Engine ground
7	W	Data link connector for CONSULT	Engine is running. ├ Idle speed └ Connect CONSULT and select DATA MONITOR mode.	Approximately 0.1V
14	Y/R			Approximately 3.5V
15	L			Approximately 4 - 6V
23	L			Approximately 0V
11	G/R	Air conditioner relay	Engine is running. └ Both air conditioner switch and blower fan switch are "ON". (Compressor operates.)	Approximately 1V
			Engine is running. └ Air conditioner switch is "OFF".	BATTERY VOLTAGE (11 - 14V)
12	G/Y	Swirl control valve control solenoid valve	Engine is running. └ Idle speed	0 - 1V
			Engine is running. └ Engine speed is above 3,600 rpm.	BATTERY VOLTAGE (11 - 14V)
13	B/P	ECCS ground	Engine is running. └ Idle speed	Engine ground
16	B	Mass air flow sensor	Engine is running. (Warm-up condition) └ Idle speed	1.3 - 1.7V
			Engine is running. (Warm-up condition) └ Engine speed is 2,500 rpm.	1.7 - 2.1V
17	W	Mass air flow sensor ground	Engine is running. (Warm-up condition) └ Idle speed	0.005 - 0.02V
18	LG/R	Engine coolant temperature sensor	Engine is running.	Approximately 0 - 4.8V Output voltage varies with engine coolant temperature.
19	W	Heated oxygen sensor	Engine is running. └ After warming up sufficiently and engine speed is 2,000 rpm	0 - Approximately 1.0V (periodically change)
20	LG	Throttle position sensor	Ignition switch "ON" (Warm-up condition) └ Accelerator pedal released	0.35 - 0.65V
			Ignition switch "ON" └ Accelerator pedal fully depressed	Approximately 4V
21 29	B/G B/G	Sensors' ground	Engine is running. (Warm-up condition) └ Idle speed	0.001 - 0.02V

ECM Terminals and Reference Value (Cont'd)

TERMINAL NO.	WIRE COLOR	ITEM	CONDITION	DATA (DC voltage)
22 30	W	Camshaft position sensor (REF) (180° signal)	Engine is running. (Warm-up condition) └ Idle speed	Approximately 0.4V 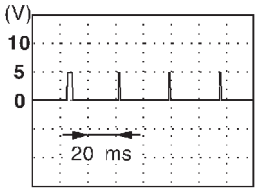 SEF064U
			Engine is running. (Warm-up condition) └ Engine speed is 2,000 rpm.	Approximately 0.4V 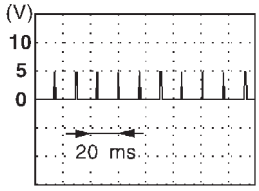 SEF065U
24	R/W	Malfunction indicator lamp	Ignition switch "ON"	Approximately 1.5V
			Engine is running. └ Idle speed	BATTERY VOLTAGE (11 - 14V)
26	Y/L	Intake air temperature sensor	Engine is running.	Approximately 0 - 4.8V Output voltage varies with intake air temperature.
31 40	B	Camshaft position sensor (POS) (1° signal)	Engine is running. (Warm-up condition) └ Idle speed	Approximately 2.5V 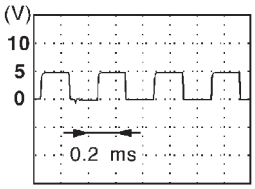 SEF066U
			Engine is running. (Warm-up condition) └ Engine speed is 2,000 rpm.	Approximately 2.5V 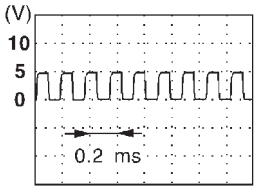 SEF067U
32	W/L	Vehicle speed sensor	Ignition switch "ON" └ Jack up all wheels and run engine at idle in 1st position.	Varies from 0 to 5V 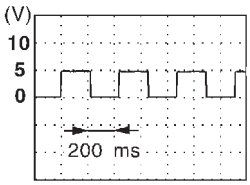 SEF068U

ECM Terminals and Reference Value (Cont'd)

TERMINAL NO.	WIRE COLOR	ITEM	CONDITION	DATA (DC voltage)
34	B/Y	Start signal	Ignition switch "ON"	Approximately 0V
			Ignition switch "START"	BATTERY VOLTAGE (11 - 14V)
35	L/B	Neutral position switch	Ignition switch "ON" └ Neutral position	0V
			Ignition switch "ON" └ Except the above gear position	Approximately 5V
36	B/L	Ignition switch	Ignition switch "OFF"	0V
			Ignition switch "ON"	BATTERY VOLTAGE (11 - 14V)
37	PU	Throttle position sensor power supply	Ignition switch "ON"	Approximately 5V
38 47	B/W	Power supply for ECM	Ignition switch "ON"	BATTERY VOLTAGE (11 - 14V)
39	B	ECCS ground	Engine is running. └ Idle speed	Engine ground
41	Y	Air conditioner switch	Engine is running. └ Both air conditioner switch and blower fan switch are "ON". (Compressor operates.)	Approximately 0V
			Engine is running. └ Air conditioner switch is "OFF".	BATTERY VOLTAGE (11 - 14V)
43	G	Power steering oil pressure switch	Engine is running. └ Steering wheel is being turned.	0V
			Engine is running. └ Steering wheel is not being turned.	Approximately 5V
46	GY/L	Power supply (Back-up)	Ignition switch "OFF"	BATTERY VOLTAGE (11 - 14V)
48	B	ECCS ground	Engine is running. └ Idle speed	Engine ground

ECM Terminals and Reference Value (Cont'd)

TERMINAL NO.	WIRE COLOR	ITEM	CONDITION	DATA (DC voltage)
101 103 110 112	W/B W/R W/L W/G	Injector No. 1 Injector No. 3 Injector No. 2 Injector No. 4	Engine is running. (Warm-up condition) └ Idle speed	BATTERY VOLTAGE (11 - 14V) 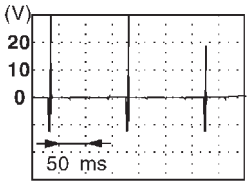 SEF069U
			Engine is running. └ Engine speed is 2,000 rpm.	BATTERY VOLTAGE (11 - 14V) 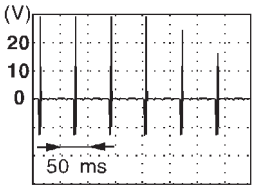 SEF070U
104	W/R	Fuel pump relay	Ignition switch "ON" └ For 5 seconds after turning ignition switch "ON" Engine is running.	Approximately 1V
			Ignition switch "ON" └ 5 seconds after turning ignition switch "ON"	BATTERY VOLTAGE (11 - 14V)
105	W/L	EVAP canister purge control solenoid valve	Engine is running. (Warm-up condition) └ Idle speed	BATTERY VOLTAGE (11 - 14V)
			Engine is running. (Warm-up condition) └ Engine is above 3,800 rpm.	Approximately 1V
107 108	B/P	ECCS ground	Engine is running. └ Idle speed	Engine ground
109	B/W	Current return	Engine is running. └ Idle speed	BATTERY VOLTAGE (11 - 14V)
113	W/G	IACV-AAC valve	Engine is running. └ Idle speed	10 - 13V
			Engine is running. └ Steering wheel is being turned. └ Air conditioner is operating. └ Rear window defogger switch is "ON". └ Lighting switch is "ON".	5 - 10V
114	R	Heated oxygen sensor heater	Engine is running. └ Engine speed is below 3,200 rpm.	Approximately 0V
			Engine is running. └ Engine speed is above 3,200 rpm.	BATTERY VOLTAGE (11 - 14V)
116	B/P	ECCS ground	Engine is running. └ Idle speed	Engine ground

Main Power Supply and Ground Circuit

ECM TERMINALS AND REFERENCE VALUE

Remarks: Specification data are reference values, and are measured between each terminal and ㊴ (ECCS ground) with a voltmeter.

TER-MINAL NO.	WIRE COLOR	ITEM	CONDITION	DATA (DC voltage)
4	L/R	ECCS relay (Self-shutoff)	Engine is running. Ignition switch "OFF" └ For a few seconds after turning ignition switch "OFF"	0 - 1V
			Ignition switch "OFF" └ A few seconds passed after turning ignition switch "OFF"	BATTERY VOLTAGE (11 - 14V)
36	B/L	Ignition switch	Ignition switch "OFF"	0V
			Ignition switch "ON"	BATTERY VOLTAGE (11 - 14V)
38 47	B/W	Power supply for ECM	Ignition switch "ON"	BATTERY VOLTAGE (11 - 14V)
46	GY/L	Power supply (Back-up)	Ignition switch "OFF"	BATTERY VOLTAGE (11 - 14V)
109	B/W	Current return	Engine is running. └ Idle speed	BATTERY VOLTAGE (11 - 14V)

Main Power Supply and Ground Circuit (Cont'd)

LHD MODELS

EC-MAIN-01

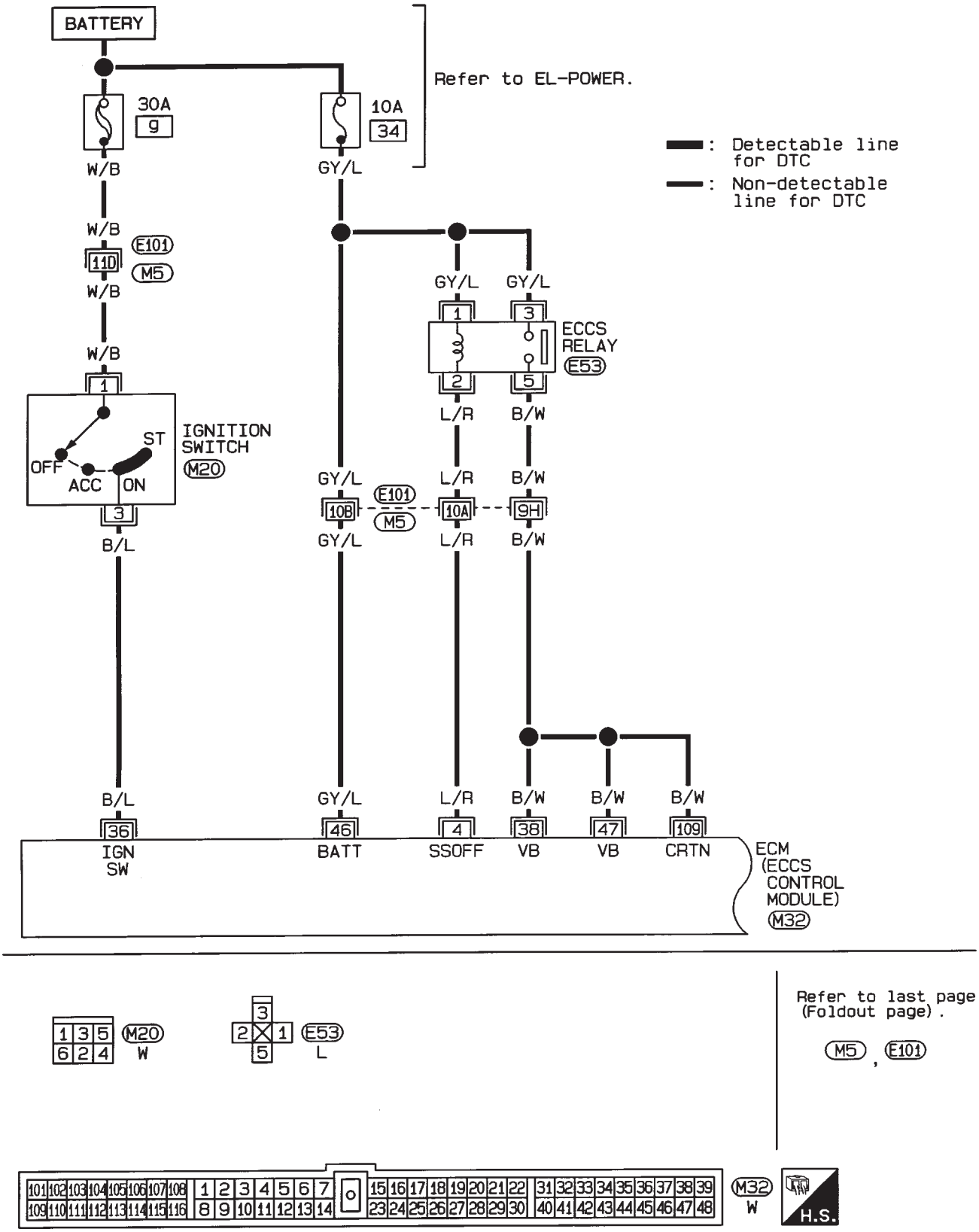

HEC335

Main Power Supply and Ground Circuit (Cont'd)

EC-MAIN-02

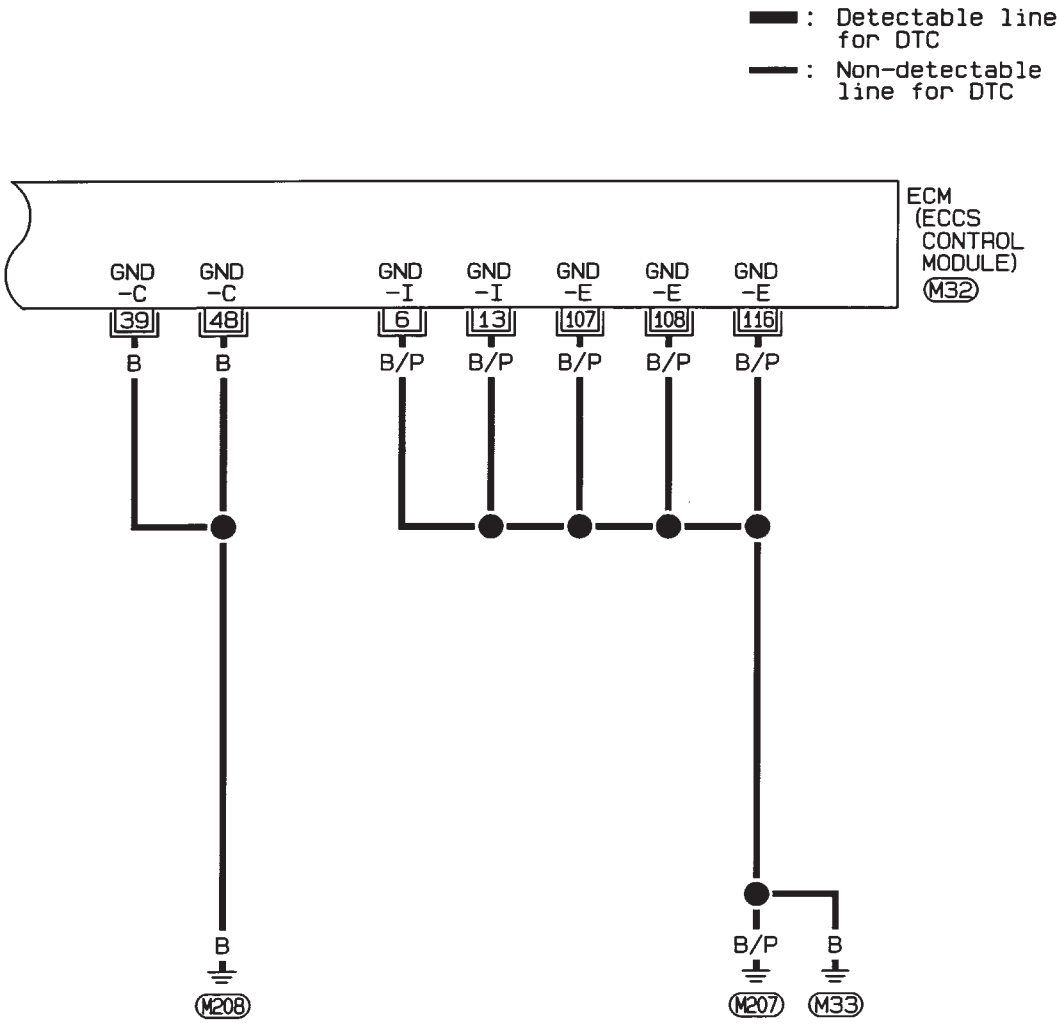

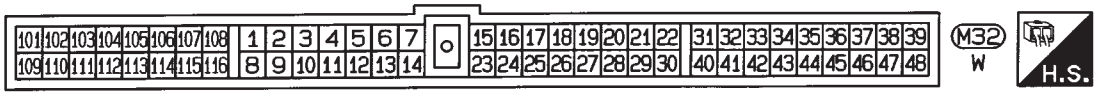

HEC336

Main Power Supply and Ground Circuit (Cont'd)

RHD MODELS

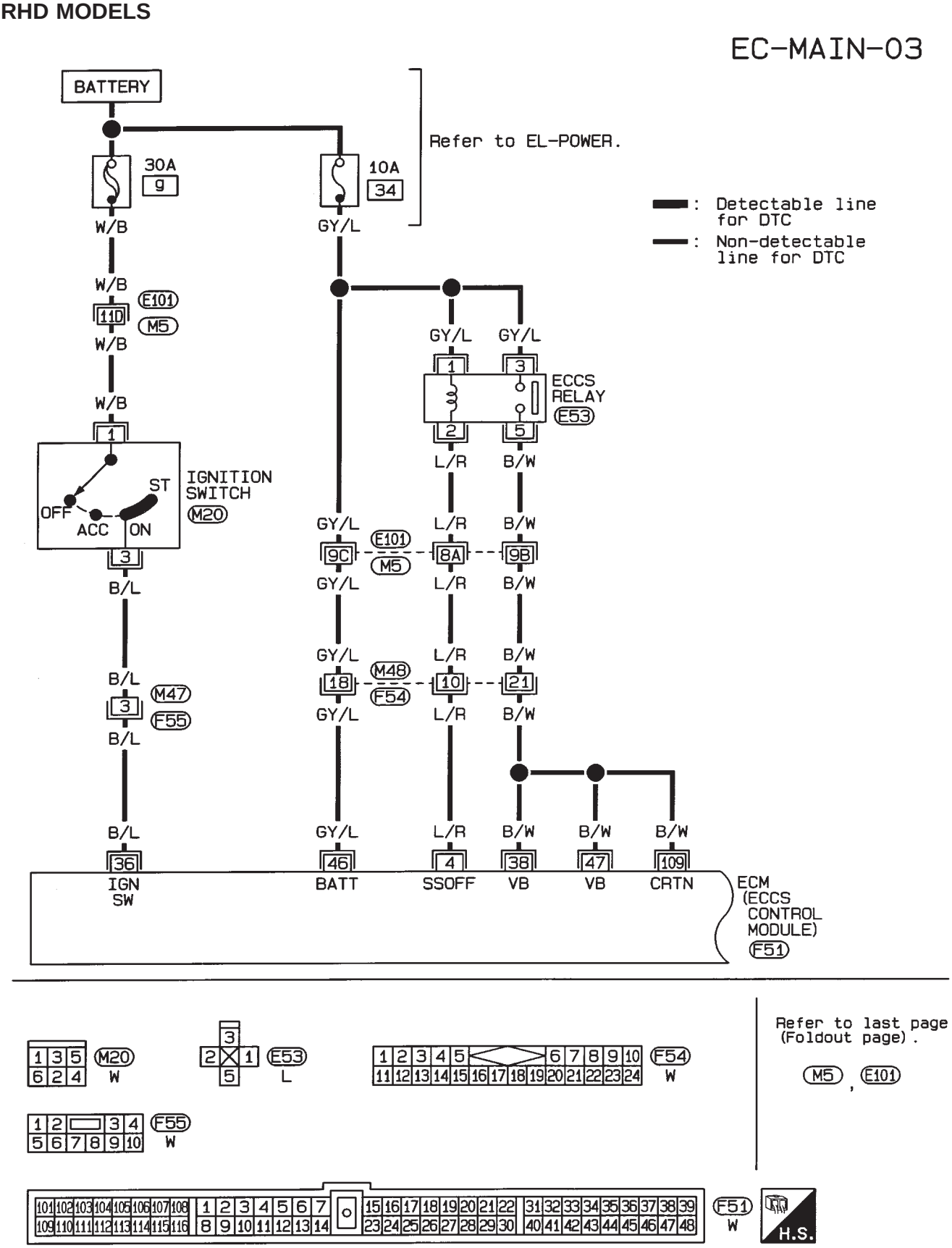

HEC337

Main Power Supply and Ground Circuit (Cont'd)

EC-MAIN-04

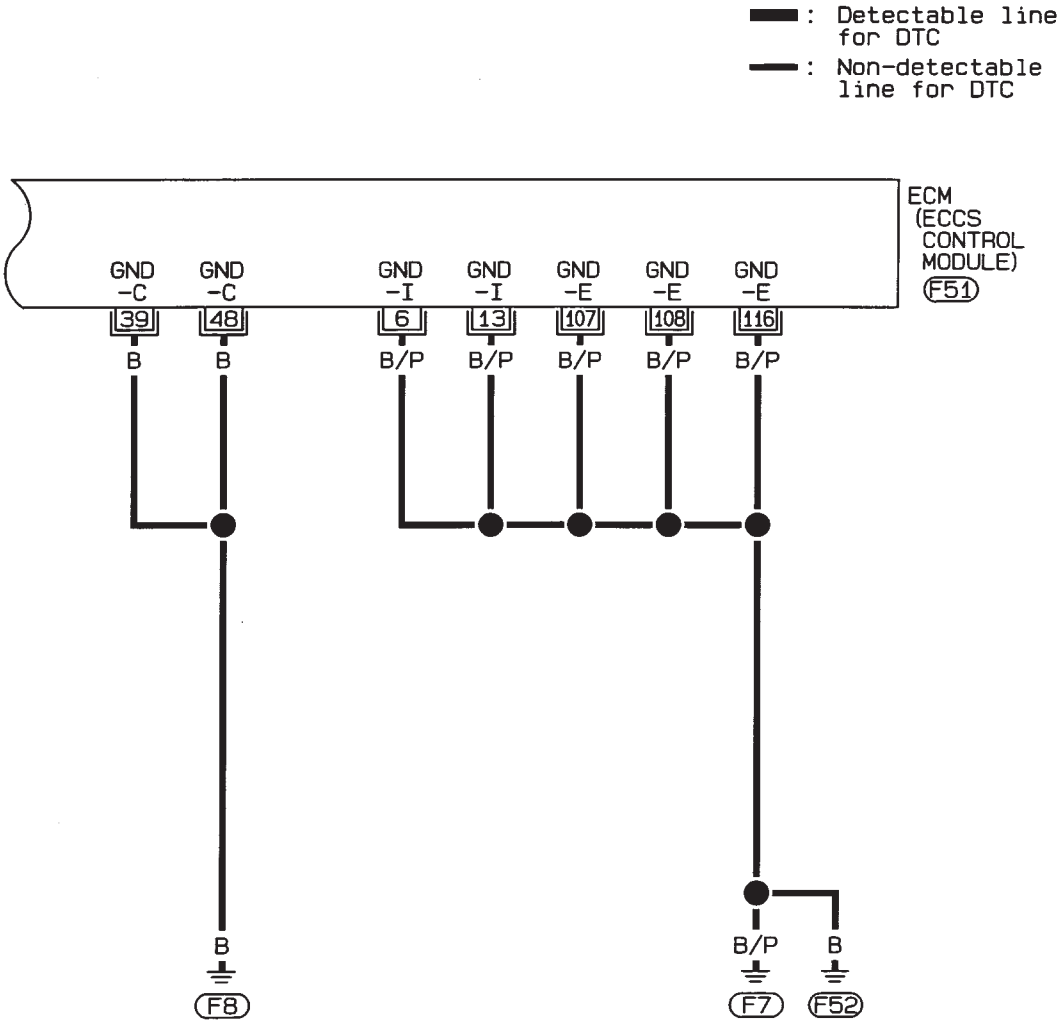

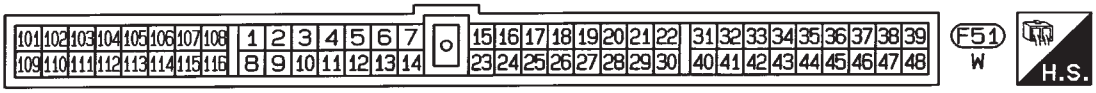

HEC338

Main Power Supply and Ground Circuit (Cont'd)

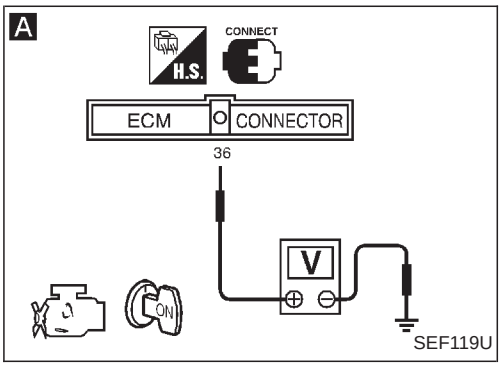

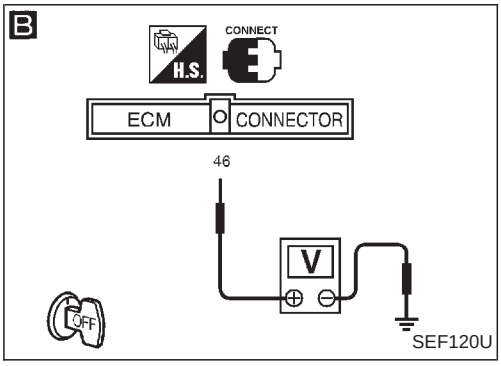

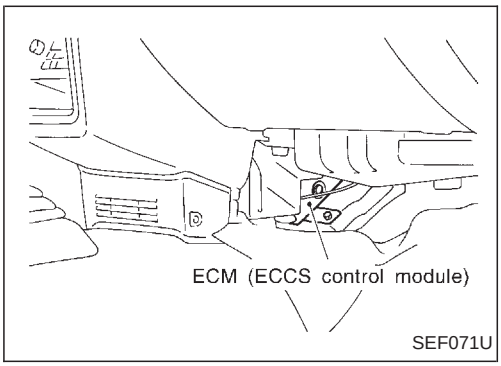

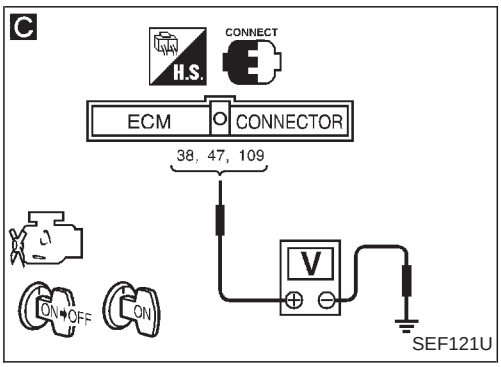

INSPECTION START

Start engine.
Is engine running?

No → **A**

CHECK POWER SUPPLY-I.
1. Turn ignition switch "ON".
2. Check voltage between ECM terminal 36 and ground with CONSULT or tester.
   Voltage: Battery voltage

If NG, check the following.
- Harness connectors F55, M47 (RHD models)
- Harness for open or short between ECM and ignition switch

If NG, repair harness or connectors.

OK → Go to "CHECK GROUND CIRCUIT" on next page.

Yes

B

CHECK POWER SUPPLY-II.
1. Stop engine.
2. Check voltage between ECM terminal 46 and ground with CONSULT or tester.
   Voltage: Battery voltage

NG →

Check the following.
- Harness connectors F54, M48 (RHD models)
- Harness connectors M5, E101
- 10A fuse
- Harness for open or short between ECM and battery

If NG, repair harness or connectors.

OK

C

CHECK POWER SUPPLY-III.
1. Turn ignition switch "ON" and then turn "OFF".
2. Check voltage between ECM terminals 38, 47, 109 and ground with CONSULT or tester.
   Voltage:
   After turning ignition switch "OFF", battery voltage will exist for a few seconds, then drop to approximately 0V.

OK → Go to "CHECK GROUND CIRCUIT" on next page.

Case-1: Battery voltage does not exist.
Case-2: Battery voltage exists for more than a few seconds.

NG

Case-2 → Go to "CHECK ECCS RELAY" on next page.

Case-1 → Ⓐ

Main Power Supply and Ground Circuit (Cont'd)

D

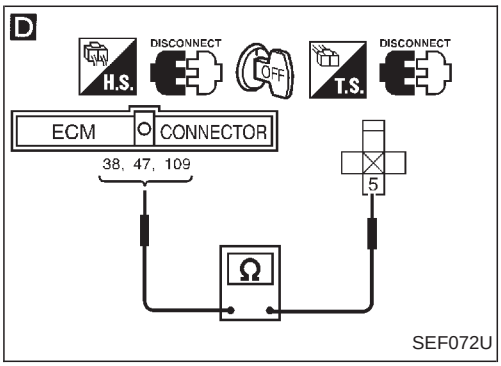

SEF072U

E

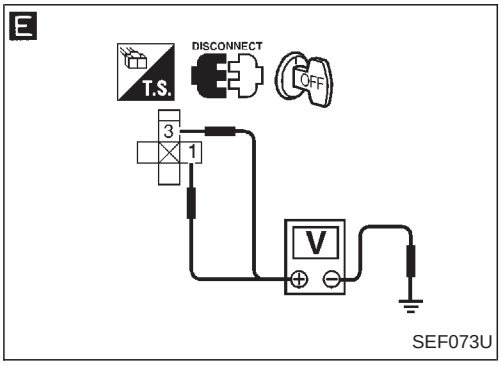

SEF073U

F

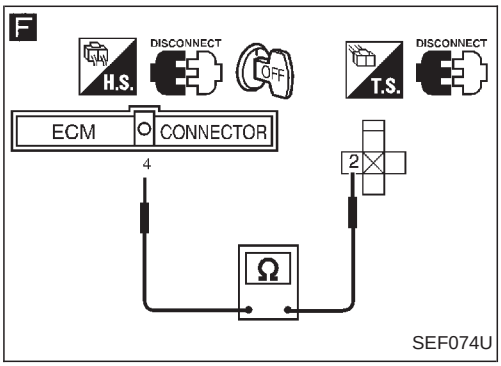

SEF074U

G

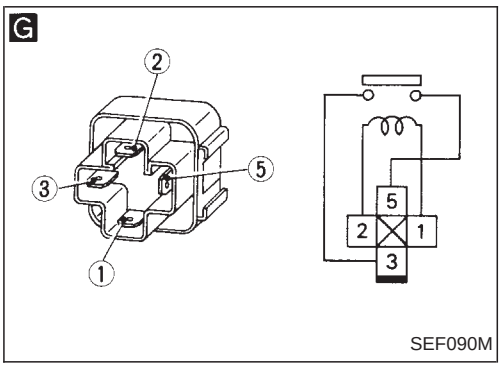

SEF090M

H

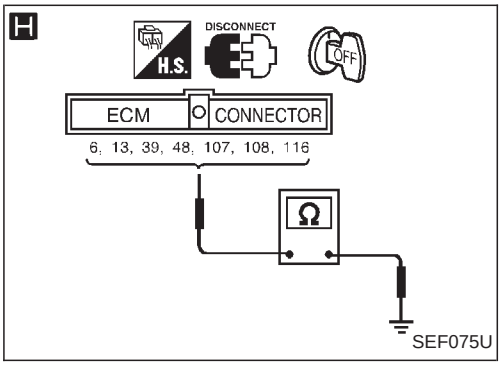

SEF075U

Ⓐ

D

CHECK HARNESS CONTINUITY BETWEEN ECCS RELAY AND ECM.
1. Disconnect ECM harness connector.
2. Disconnect ECCS relay.
3. Check harness continuity between ECM terminals ㊳, ㊼, (109) and terminal ⑤.
   Continuity should exist.
   If OK, check harness for short to ground and short to power.

NG → Check the following.
- Harness connectors (F54), (M48) (RHD models)
- Harness connectors (M5), (E101)
- Harness for open or short between ECM and ECCS relay

If NG, repair open circuit, short to ground or short to power in harness or connectors.

OK ↓

E

CHECK VOLTAGE BETWEEN ECCS RELAY AND GROUND.
Check voltage between terminals ①, ③ and ground with CONSULT or tester.
Voltage: Battery voltage

NG → Check the following.
- Harness for open or short between ECCS relay and fuse

If NG, repair harness or connectors.

OK ↓

F

CHECK OUTPUT SIGNAL CIRCUIT.
Check harness continuity between ECM terminal ④ and relay terminal ②.
Continuity should exist.
If OK, check harness for short to ground and short to power.

NG → Check the following.
- Harness connectors (F54), (M48) (RHD models)
- Harness connectors (M5), (E101)
- Harness for open or short between ECM and ECCS relay

If NG, repair open circuit, short to ground or short to power in harness or connectors.

OK ↓

G

CHECK ECCS RELAY.
1. Apply 12V direct current between relay terminals ① and ②.
2. Check continuity between relay terminals ③ and ⑤.
   12V (① - ②) applied:
   Continuity exists.
   No voltage applied:
   No continuity

NG → Replace ECCS relay.

OK ↓

H

CHECK GROUND CIRCUIT.
1. Turn ignition switch "OFF".
2. Loosen and retighten engine ground screws.
3. Disconnect ECM harness connector.
4. Check harness continuity between ECM terminals ⑥, ⑬, ㊴, ㊽, (107), (108), (116) and engine ground.
   Continuity should exist.
   If OK, check harness for short to ground and short to power.

NG → Repair open circuit, short to ground or short to power in harness or connectors.

OK ↓

Check ECM pin terminals for damage and check the connection of ECM harness connector.

↓

INSPECTION END

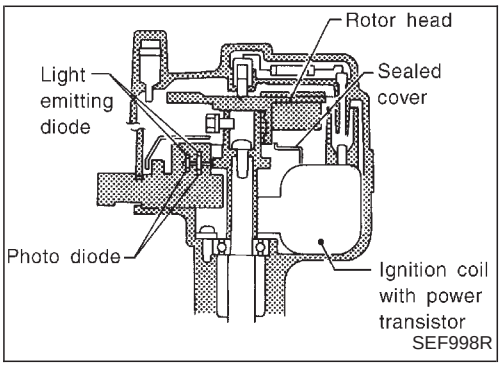

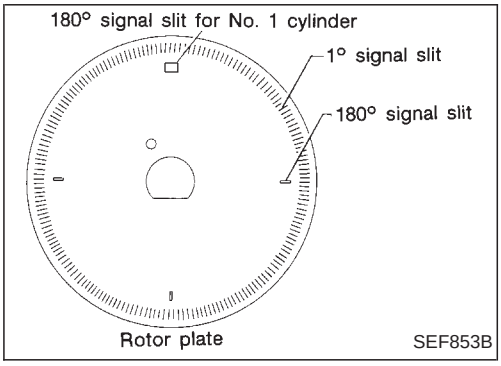

Camshaft Position Sensor (CMPS)

COMPONENT DESCRIPTION

The camshaft position sensor is a basic component of the ECCS. It monitors engine speed and piston position. These input signals to the ECM are used to control fuel injection, ignition timing and other functions.

The camshaft position sensor has a rotor plate and a wave-forming circuit. The rotor plate has 360 slits for a 1° signal and 4 slits for a 180° signal. The wave-forming circuit consists of Light Emitting Diodes (LED) and photo diodes.

The rotor plate is positioned between the LED and the photo diode. The LED transmits light to the photo diode. As the rotor plate turns, the slits cut the light to generate rough-shaped pulses. These pulses are converted into on-off signals by the wave-forming circuit and sent to the ECM.

The distributor is not repairable and must be replaced as an assembly, except distributor cap.

Camshaft Position Sensor (CMPS) (Cont’d)

ECM TERMINALS AND REFERENCE VALUE

Remarks: Specification data are reference values, and are measured between each terminal and ㊴ (ECCS ground) with a voltmeter.

TERMINAL NO.	WIRE COLOR	ITEM	CONDITION	DATA (DC voltage)
22 30	W W	Camshaft position sensor (REF) (180° signal)	Engine is running. (Warm-up condition) └ Idle speed	Approximately 0.4V 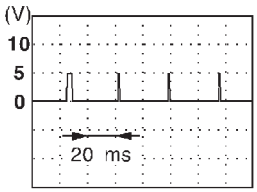 SEF064U
			Engine is running. (Warm-up condition) └ Engine speed is 2,000 rpm.	Approximately 0.4V 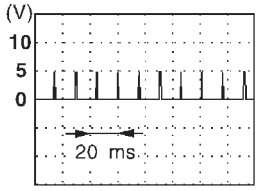 SEF065U
31 40	B B	Camshaft position sensor (POS) (1° signal)	Engine is running. (Warm-up condition) └ Idle speed	Approximately 2.5V 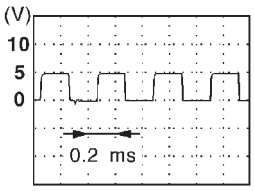 SEF066U
			Engine is running. (Warm-up condition) └ Engine speed is 2,000 rpm.	Approximately 2.5V 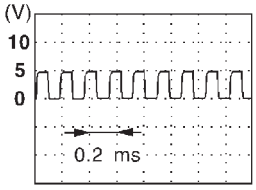 SEF067U

ON BOARD DIAGNOSIS LOGIC

Diagnostic Trouble Code No.	Malfunction is detected when	Check Items (Possible Cause)
11	• Either 1° or 180° signal is not sent to ECM for the first few seconds during engine cranking. ..... • Either 1° or 180° signal is not sent to ECM during engine running. ..... • Either 1° or 180° signal is not in the normal pattern during engine running.	• Harness or connectors (The camshaft position sensor circuit is open or shorted.) • Camshaft position sensor • Starter motor (Refer to EL section.) • Starting system circuit (Refer to EL section.) • Dead (Weak) battery

Camshaft Position Sensor (CMPS) (Cont’d)

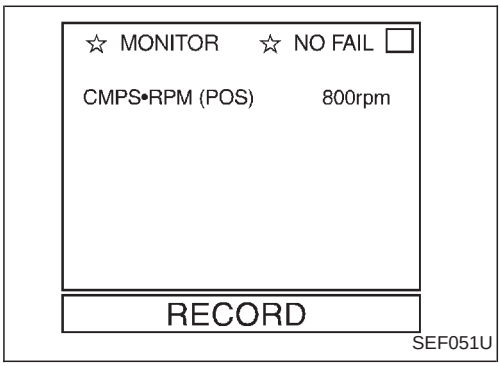

DIAGNOSTIC TROUBLE CODE CONFIRMATION PROCEDURE

Before performing the following procedure, confirm that battery voltage is more than 10V.

1) Turn ignition switch “ON” and select “DATA MONITOR” mode with CONSULT.
2) Start engine and run it for at least 2 seconds at idle speed.
   (If engine does not run, turn ignition switch to “START” for at least 2 seconds.)

OR

1) Start engine and run it for at least 2 seconds at idle speed.
   (If engine does not run, turn ignition switch to “START” for at least 2 seconds.)
2) Turn ignition switch “OFF”, wait at least 5 seconds and then turn “ON”.
3) Perform “Diagnostic Test Mode II (Self-diagnostic results)” with ECM.

Camshaft Position Sensor (CMPS) (Cont’d)

LHD MODELS

EC-CMPS-01

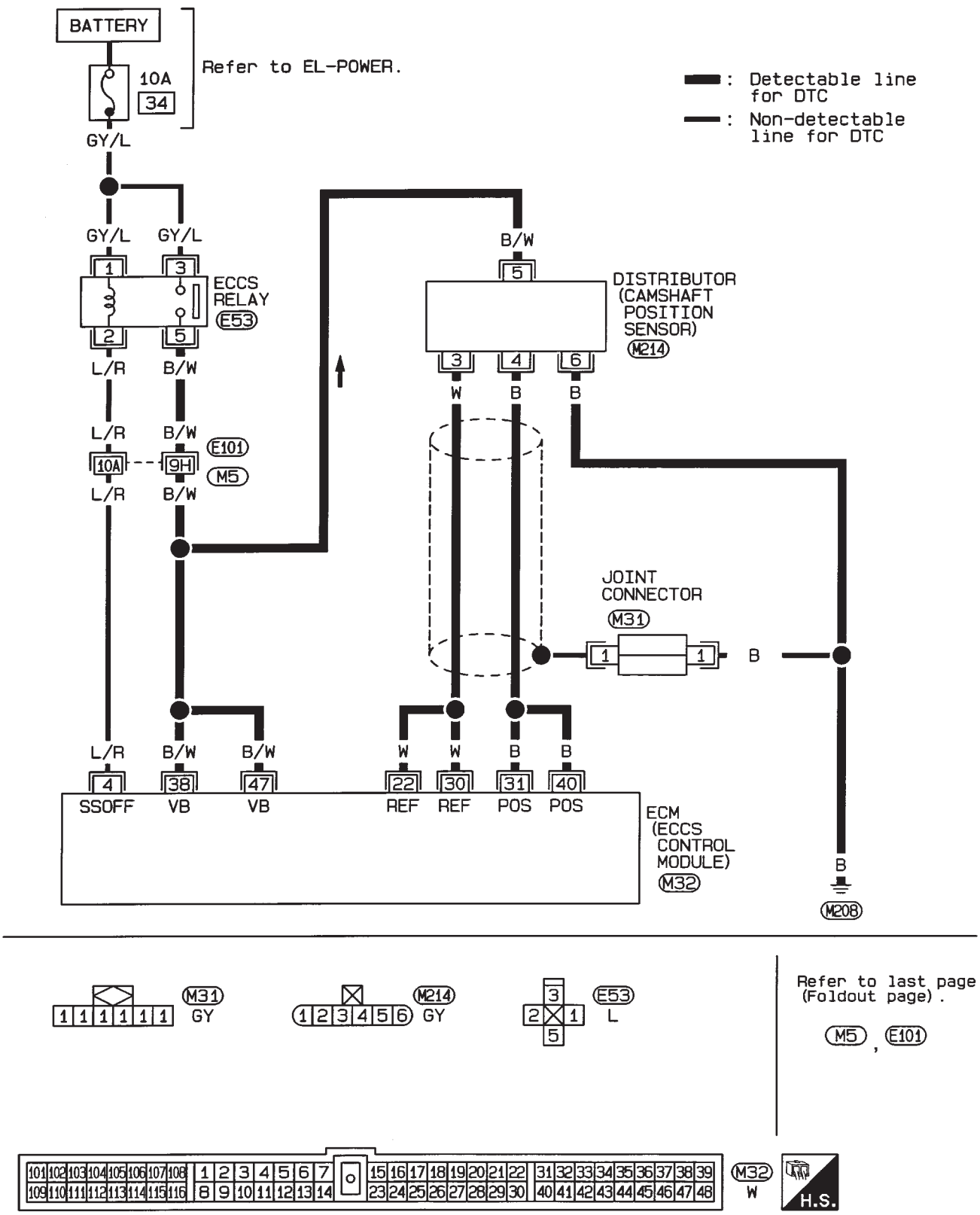

HEC339

Camshaft Position Sensor (CMPS) (Cont’d)

RHD MODELS

EC-CMPS-02

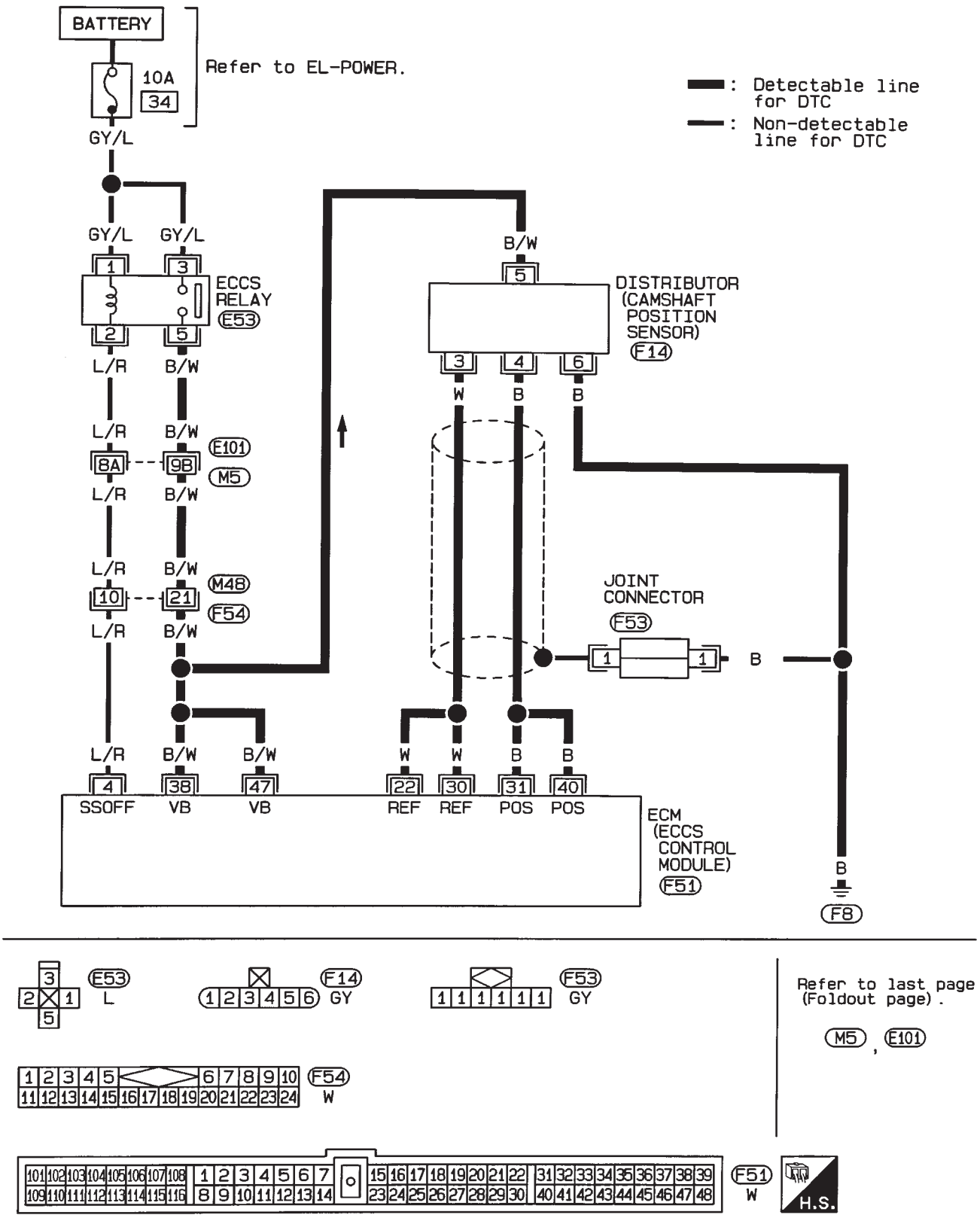

HEC340

Camshaft Position Sensor (CMPS) (Cont’d)

DIAGNOSTIC PROCEDURE

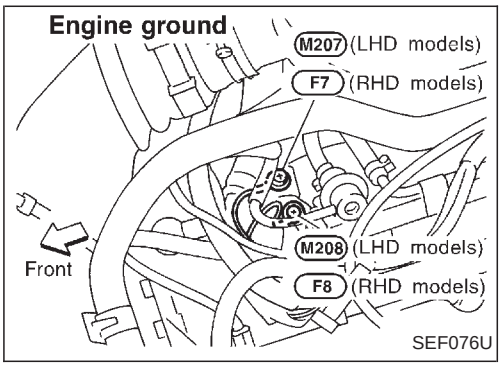

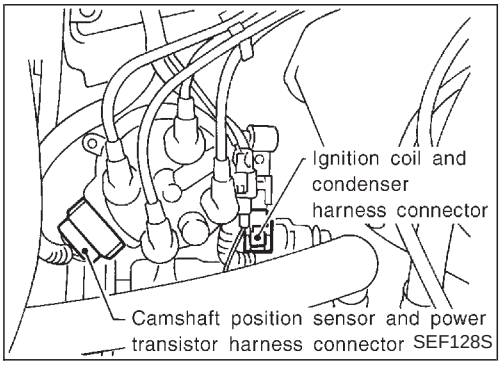

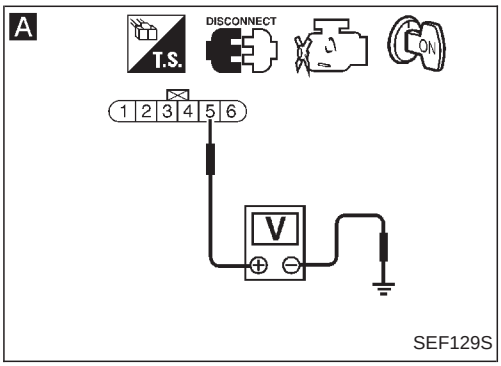

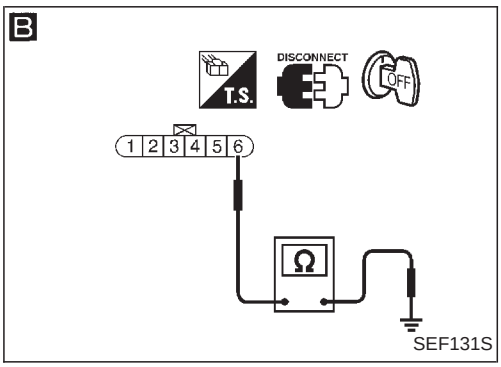

INSPECTION START

↓

CHECK STARTING SYSTEM.
Does the engine turn over?
(Does the starter motor operate?)

No → Check starting system. (Refer to EL section.)

Yes ↓

CHECK SHIELD CIRCUIT.
1. Turn ignition switch “OFF”.
2. Loosen and retighten engine ground screws.
3. Remove joint connector (M31) or (F53).
4. Check the following.
   - Continuity between joint connector terminal ① and ground
   - Joint connector (Refer to “HARNESS LAYOUT” in EL section.)

   Continuity should exist.
   If OK, check harness for short to ground and short to power. Then reconnect joint connector.

NG → Repair open circuit, short to ground or short to power in harness or connectors.

OK ↓

A

CHECK POWER SUPPLY.
1. Disconnect camshaft position sensor harness connector.
2. Turn ignition switch “ON”.
3. Check voltage between terminal ⑤ and ground with CONSULT or tester.
   Voltage: Battery voltage

NG → Check the following.
- Harness connectors (M5), (E101)
- Harness connectors (F54), (M48) (RHD models)
- Harness for open or short between camshaft position sensor and ECM
- Harness for open or short between camshaft position sensor and ECCS relay

If NG, repair harness or connectors.

OK ↓

B

CHECK GROUND CIRCUIT.
1. Disconnect camshaft position sensor harness connector.
2. Check harness continuity between terminal ⑥ and engine ground.
   Continuity should exist.
   If OK, check harness for short.

NG → Repair open circuit, short to ground or short to power in harness or connectors.

OK ↓

Ⓐ

Camshaft Position Sensor (CMPS) (Cont’d)

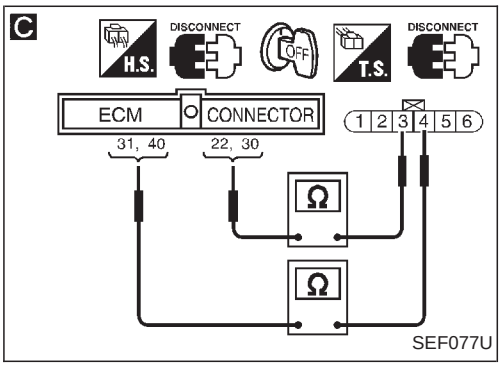

Ⓐ

C

CHECK INPUT SIGNAL CIRCUIT.
1. Turn ignition switch “OFF”.
2. Disconnect ECM harness connector.
3. Check harness continuity between terminal ④ and ECM terminals ㉛, ㊵ (1° signal), terminal ③ and ECM terminals ㉒, ㉚ (180° signal).
   Continuity should exist.
   If OK, check harness for short to ground and short to power.

NG → Repair open circuit, short to ground or short to power in harness or connectors.

OK ↓

CHECK COMPONENT
(Camshaft position sensor).
Refer to “COMPONENT INSPECTION” below.

NG → Replace camshaft position sensor.

OK ↓

Disconnect and reconnect harness connectors in the circuit. Then retest.

Trouble is not fixed. ↓

Check ECM pin terminals for damage and check the connection of ECM harness connector. Reconnect ECM harness connector and retest.

↓

INSPECTION END

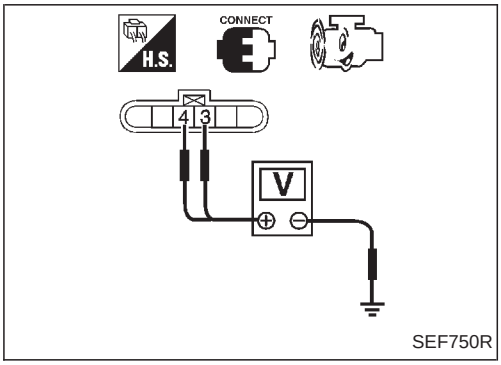

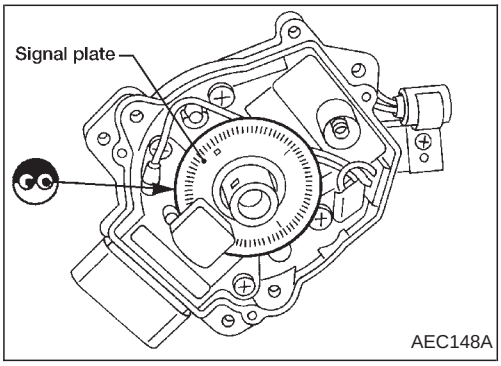

COMPONENT INSPECTION

Camshaft position sensor

1. Start engine.
2. Check voltage between terminals ③ , ④ and ground with DC range.

Condition	Terminals	Voltage
Engine running at idle	③ and ground	Approximately 0.4V*
	④ and ground	Approximately 2.5V*

*: Average voltage for pulse signal (Actual pulse signal can be confirmed by oscilloscope.)

If NG, replace distributor assembly with camshaft position sensor.

3. Visually check signal plate for damage or dust.

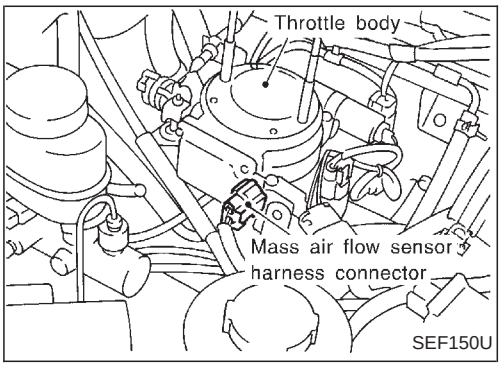

Mass Air Flow Sensor (MAFS)

COMPONENT DESCRIPTION

The mass air flow sensor is placed in the stream of intake air. It measures the intake flow rate by measuring a part of the entire intake flow. It consists of a hot wire that is supplied with electric current from the ECM. The temperature of the hot wire is controlled by the ECM a certain amount. The heat generated by the hot wire is reduced as the intake air flows around it. The more air, the greater the heat loss.

Therefore, the ECM must supply more electric current to the hot wire as air flow increases. This maintains the temperature of the hot wire. The ECM detects the air flow by means of this current change.

CONSULT REFERENCE VALUE IN DATA MONITOR MODE

Remarks: Specification data are reference values.

MONITOR ITEM	CONDITION		SPECIFICATION
MAS AIR/FL SE	● Engine: After warming up ● Air conditioner switch: “OFF” ● Shift lever: Neutral position ● No-load	Idle	1.3 - 1.7V
		2,500 rpm	1.7 - 2.1V

ECM TERMINALS AND REFERENCE VALUE

Remarks: Specification data are reference values, and are measured between each terminal and ㊴ (ECCS ground) with a voltmeter.

TER-MINAL NO.	WIRE COLOR	ITEM	CONDITION	DATA (DC voltage)
16	B	Mass air flow sensor	Engine is running. (Warm-up condition) └ Idle speed	1.3 - 1.7V
			Engine is running. (Warm-up condition) └ Engine speed is 2,500 rpm.	1.7 - 2.1V
17	W	Mass air flow sensor ground	Engine is running. (Warm-up condition) └ Idle speed	0.005 - 0.02V

ON BOARD DIAGNOSIS LOGIC

Diagnostic Trouble Code No.	Malfunction is detected when ...	Check Items (Possible Cause)
12	● An excessively high or low voltage from the sensor is sent to ECM.*	● Harness or connectors (The sensor circuit is open or shorted.) ● Mass air flow sensor

*: When this malfunction is detected, the ECM enters fail-safe mode.

Engine operating condition in fail-safe mode	Engine speed will not rise more than 2,400 rpm due to the fuel cut.

Mass Air Flow Sensor (MAFS) (Cont’d)

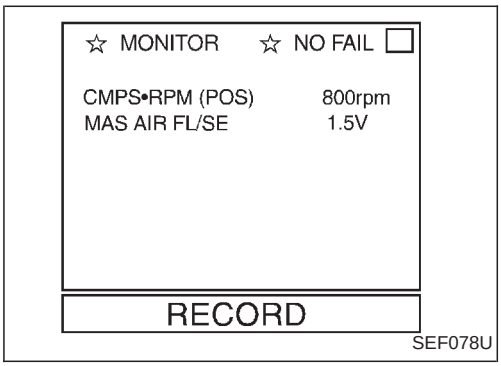

DIAGNOSTIC TROUBLE CODE CONFIRMATION PROCEDURE

1) Turn ignition switch “ON”, and wait at least 6 seconds.
2) Select “DATA MONITOR” mode with CONSULT.
3) Start engine and wait at least 3 seconds.

OR

1) Turn ignition switch “ON”, and wait at least 6 seconds.
2) Start engine and wait at least 3 seconds.
3) Turn ignition switch “OFF”, wait at least 5 seconds and then turn “ON”.
4) Perform “Diagnostic Test Mode II (Self-diagnostic results)” with ECM.

Mass Air Flow Sensor (MAFS) (Cont’d)

LHD MODELS

EC-MAFS-01

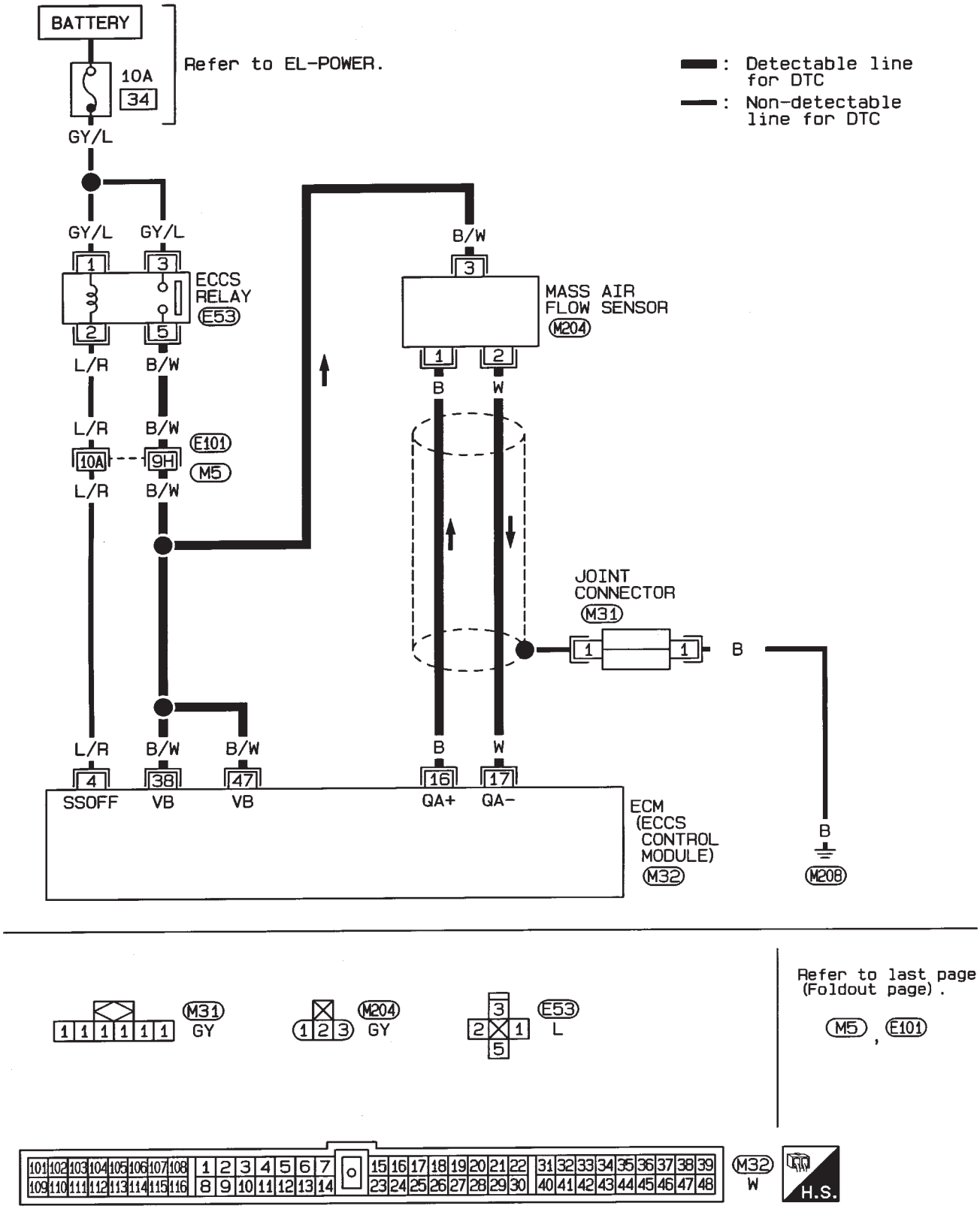

HEC341

Mass Air Flow Sensor (MAFS) (Cont’d)

RHD MODELS

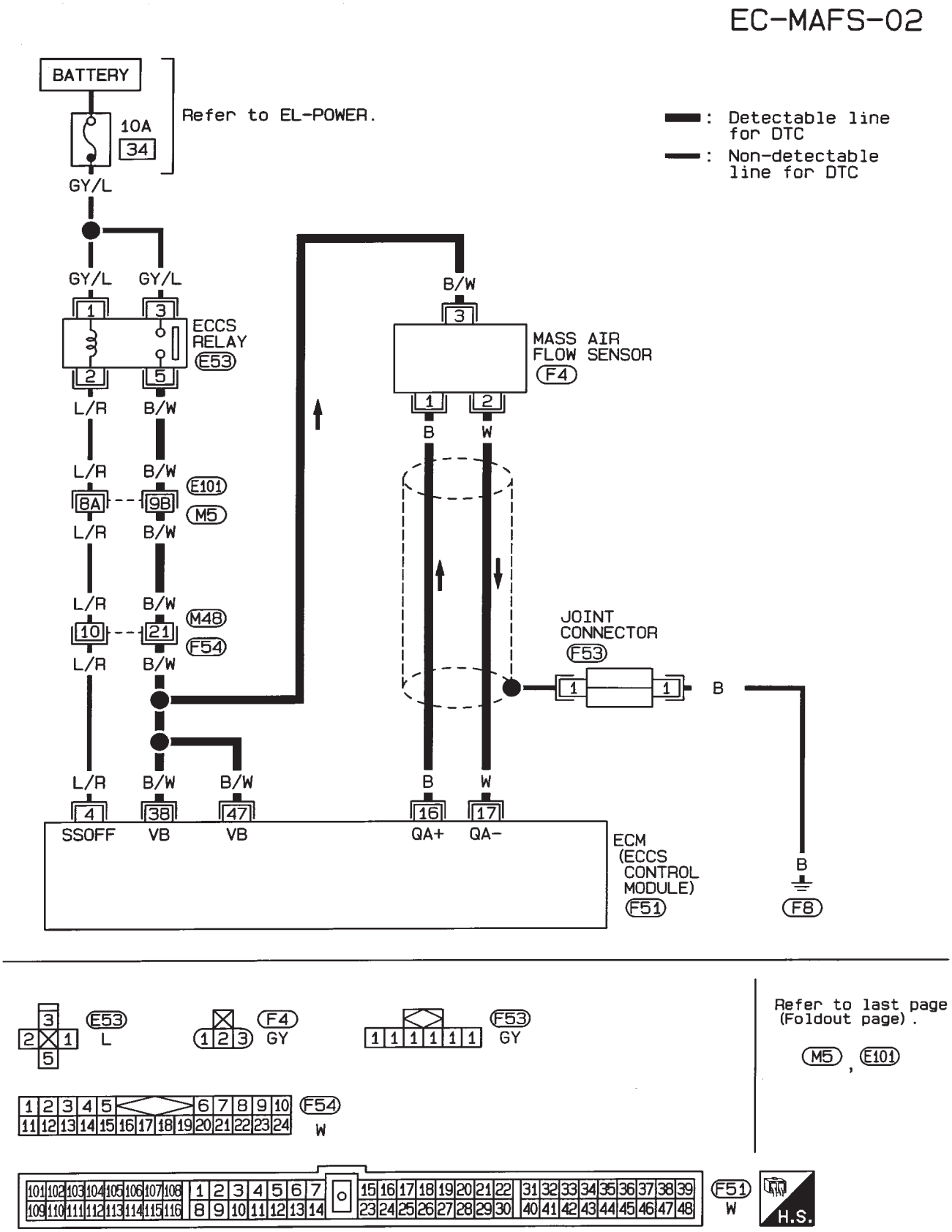

HEC342

Mass Air Flow Sensor (MAFS) (Cont’d)

DIAGNOSTIC PROCEDURE

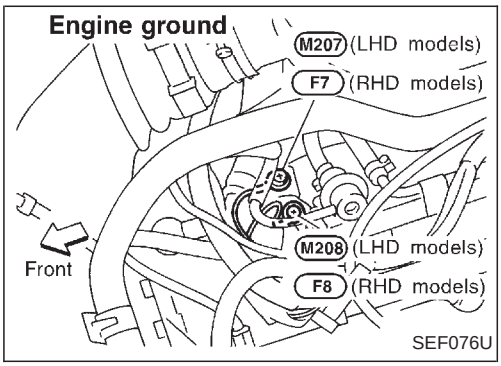

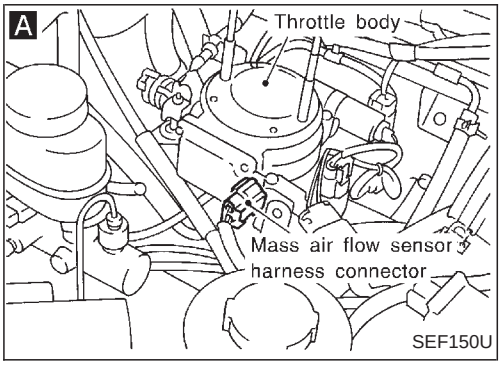

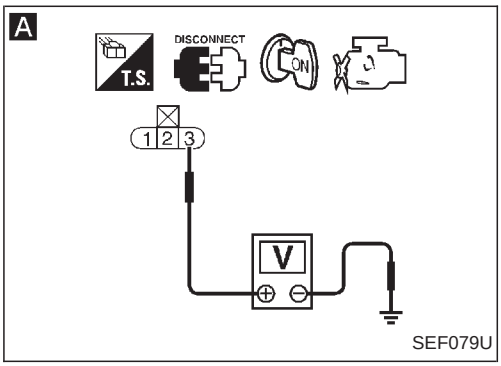

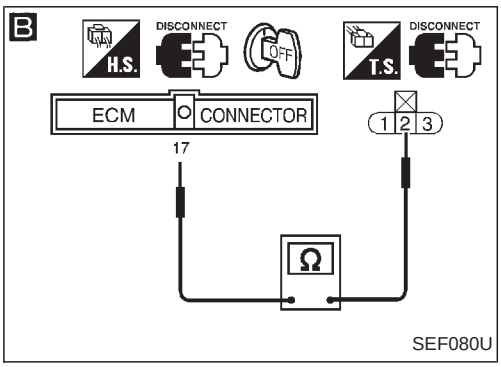

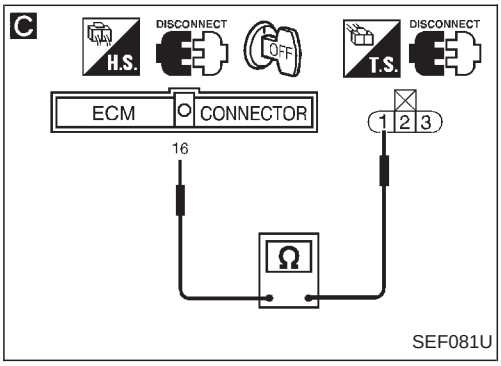

INSPECTION START

↓

CHECK SHIELD CIRCUIT.
1. Turn ignition switch “OFF”.
2. Loosen and retighten engine ground screws.
3. Remove joint connector (M31) or (F53).
4. Check the following.
   - Continuity between joint connector terminal ① and ground
   - Joint connector (Refer to “HARNESS LAYOUT” in EL section.)

   Continuity should exist.
   If OK, check harness for short to ground and short to power. Then reconnect joint connector.

NG → Repair open circuit, short to ground or short to power in harness or connectors.

OK ↓

A

CHECK POWER SUPPLY.
1. Disconnect mass air flow sensor harness connector.
2. Turn ignition switch “ON”.
3. Check voltage between terminal ③ and ground with CONSULT or tester.
   Voltage: Battery voltage

NG → Check the following.
- Harness connectors (M5), (E101)
- Harness connectors (F54), (M48) (RHD models)
- Harness for open or short between mass air flow sensor and ECM
- Harness for open or short between mass air flow sensor and ECCS relay

If NG, repair harness or connectors.

OK ↓

B

CHECK GROUND CIRCUIT.
1. Turn ignition switch “OFF”.
2. Disconnect ECM harness connector.
3. Check harness continuity between terminal ② and ECM terminal ⑰.
   Continuity should exist.
   If OK, check harness for short to ground and short to power.

NG → Repair open circuit, short to ground or short to power in harness or connectors.

OK ↓

C

CHECK INPUT SIGNAL CIRCUIT.
Check harness continuity between terminal ① and ECM terminal ⑯.
Continuity should exist.
If OK, check harness for short to ground and short to power.

NG → Repair open circuit, short to ground or short to power in harness or connectors.

OK ↓

Ⓐ

Mass Air Flow Sensor (MAFS) (Cont’d)

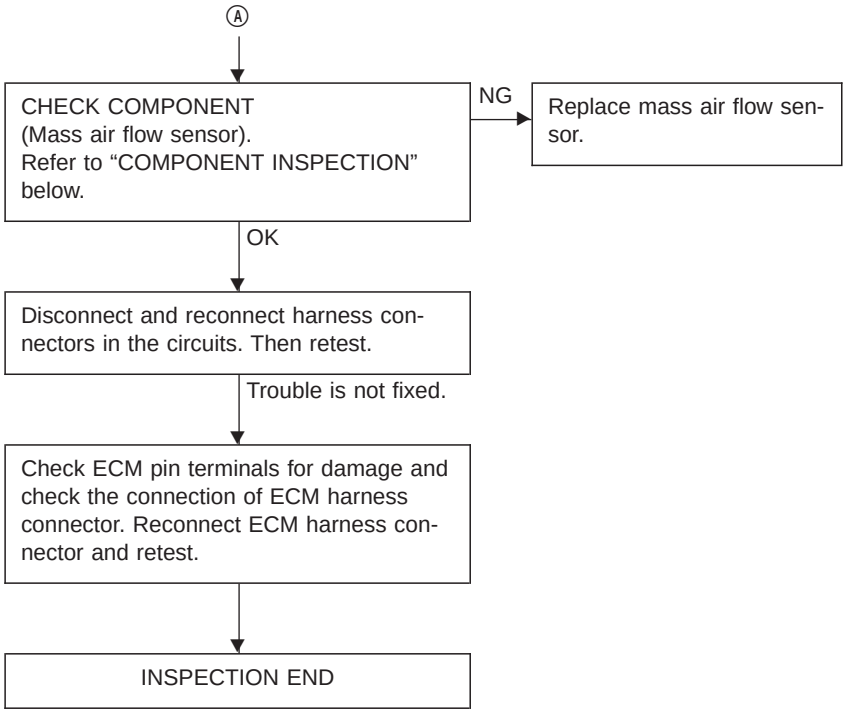

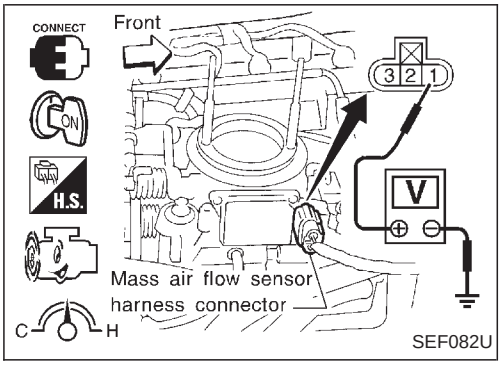

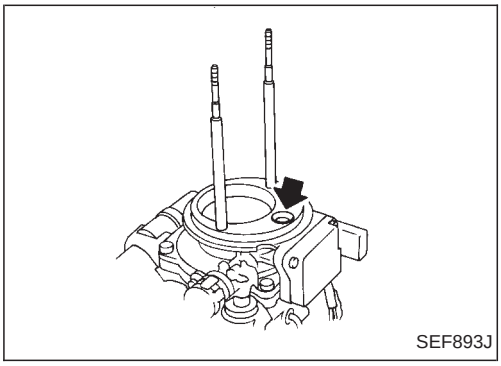

COMPONENT INSPECTION

Mass air flow sensor

1. Turn ignition switch “ON”.
2. Start engine and warm it up sufficiently.
3. Check voltage between terminal ① and ground.

Conditions	Voltage V
Ignition switch “ON” (Engine stopped.)	Less than 1.0
Idle (Engine is warmed-up sufficiently.)	1.3 - 1.7
2,500 rpm	1.7 - 2.1
Idle to about 4,000 rpm*	1.3 - 1.7 to Approx. 4.0

*: Check for linear voltage rise in response to increase to about 4,000 rpm in engine speed.

4. If NG, remove mass air flow sensor from air duct. Check hot wire for damage or dust.

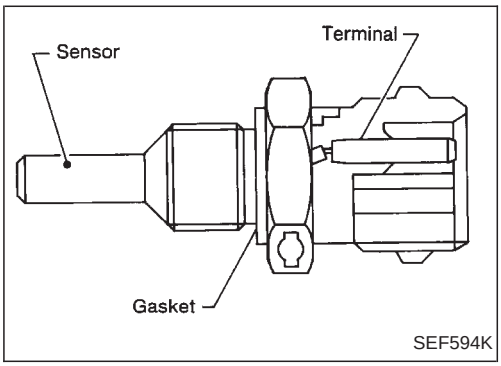

Engine Coolant Temperature Sensor (ECTS)

COMPONENT DESCRIPTION

The engine coolant temperature sensor is used to detect the engine coolant temperature. The sensor modifies a voltage signal from the ECM. The modified signal returns to the ECM as the engine coolant temperature input. The sensor uses a thermistor which is sensitive to the change in temperature. The electrical resistance of the thermistor decreases as temperature increases.

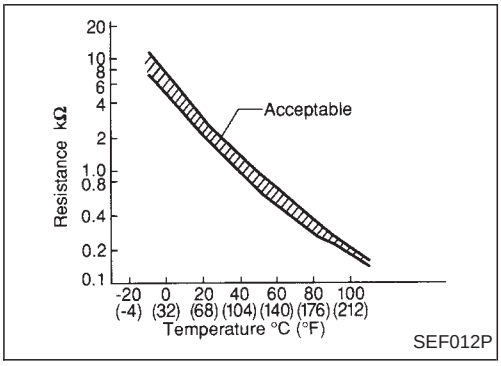

<Reference data>

Engine coolant temperature °C (°F)	Voltage* (V)	Resistance (kΩ)
−10 (14)	4.4	7.0 - 11.4
20 (68)	3.5	2.1 - 2.9
50 (122)	2.2	0.68 - 1.00
90 (194)	1.0	0.236 - 0.260

*: These data are reference values and are measured between ECM terminal ⑱ (Engine coolant temperature sensor) and ECM terminal ㊴ (ECCS ground).

ON BOARD DIAGNOSIS LOGIC

Diagnostic Trouble Code No.	Malfunction is detected when ...	Check Items (Possible Cause)
13	● An excessively high or low voltage from the sensor is sent to ECM.*	● Harness or connectors (The sensor circuit is open or shorted.) ● Engine coolant temperature sensor

*: When this malfunction is detected, the ECM enters fail-safe mode.

Engine operating condition in fail-safe mode	Condition	Engine coolant temperature decided (CONSULT DISPLAY)
Engine coolant temperature will be determined by ECM based on the time after turning ignition switch “ON” or “START”. CONSULT displays the engine coolant temperature decided by ECM.	Just as ignition switch is turned ON or START	20°C (68°F)
	More than 6 minutes after ignition START	80°C (176°F)
	Except as shown above	20 - 80°C (68 - 176°F) (Depends on the time)

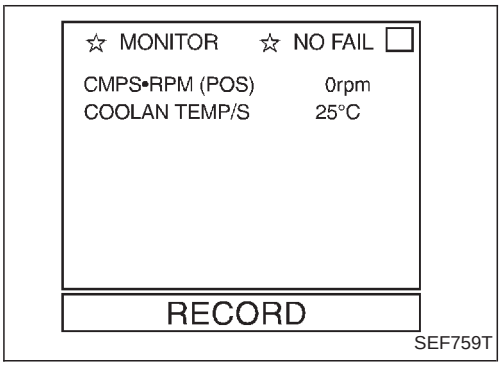

DIAGNOSTIC TROUBLE CODE CONFIRMATION PROCEDURE

1) Turn ignition switch “ON”.
2) Select “DATA MONITOR” mode with CONSULT.
3) Wait at least 5 seconds.

OR

1) Turn ignition switch “ON” and wait at least 5 seconds.
2) Turn ignition switch “OFF”, wait at least 5 seconds and then turn “ON”.
3) Perform “Diagnostic Test Mode II (Self-diagnostic results)” with ECM.

Engine Coolant Temperature Sensor (ECTS) (Cont’d)

EC-ECTS-01

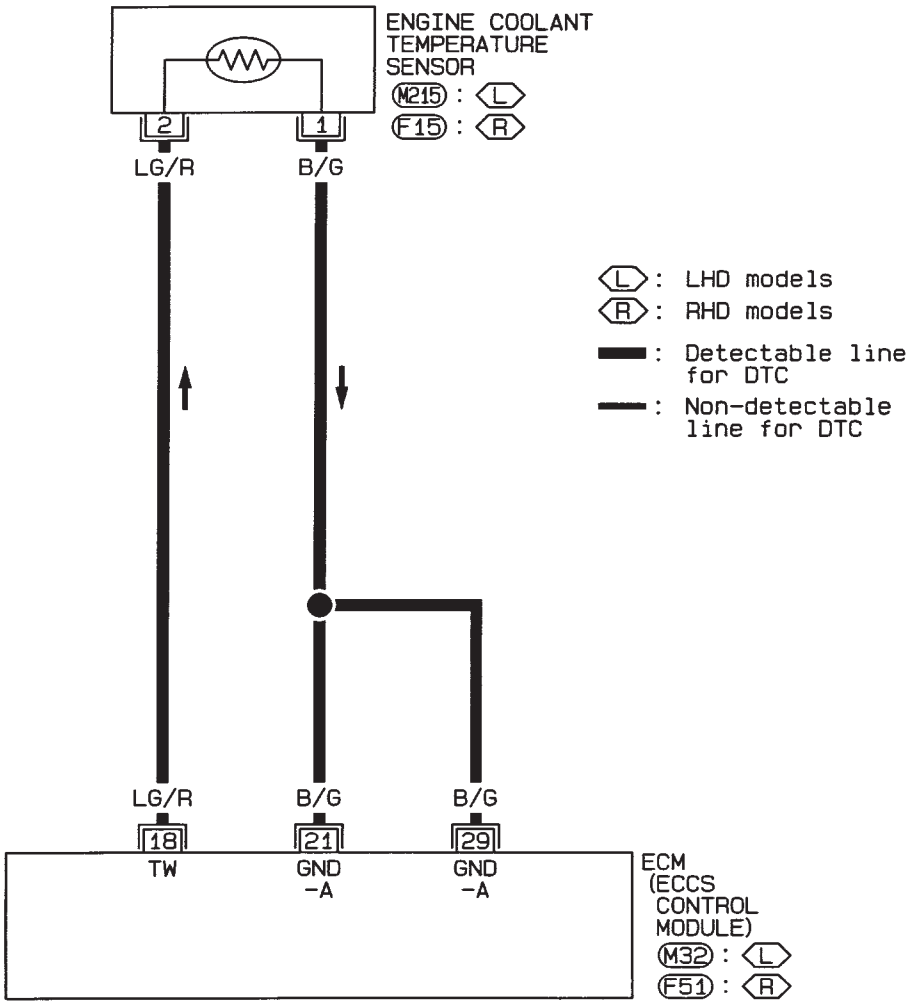

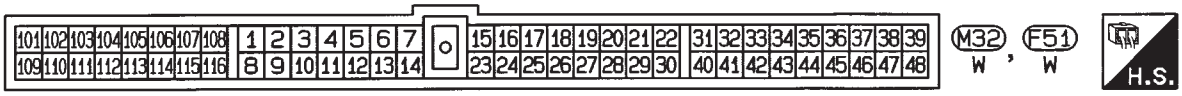

HEC343

Engine Coolant Temperature Sensor (ECTS) (Cont’d)

DIAGNOSTIC PROCEDURE

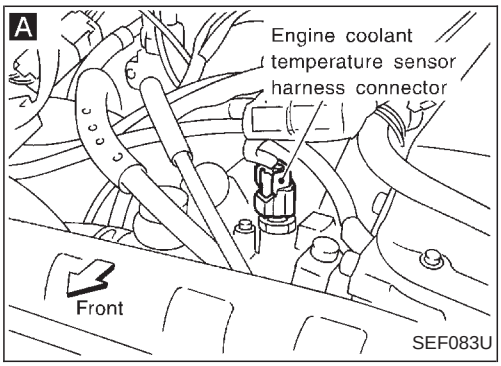

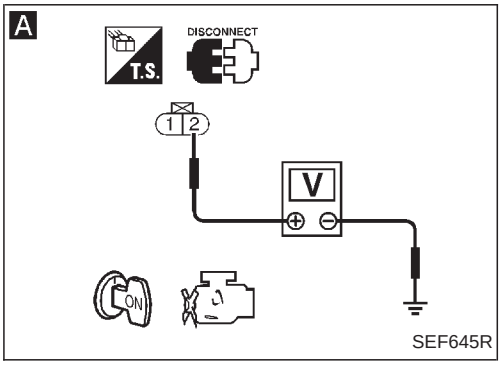

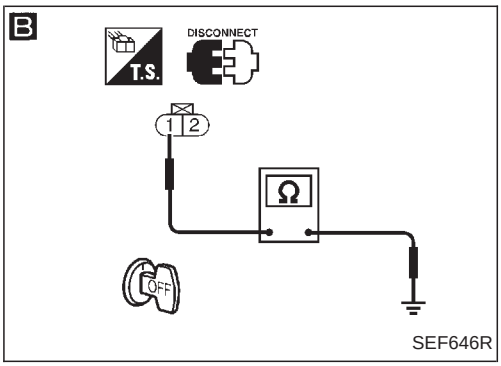

INSPECTION START

↓

A

CHECK POWER SUPPLY.
1. Turn ignition switch “OFF”.
2. Disconnect engine coolant temperature sensor harness connector.
3. Turn ignition switch “ON”.
4. Check voltage between terminal ② and ground with CONSULT or tester.
   Voltage:
   Approximately 5V

NG → Repair harness or connectors.

OK ↓

B

CHECK GROUND CIRCUIT.
1. Turn ignition switch “OFF”.
2. Check harness continuity between terminal ① and engine ground.
   Continuity should exist.
   If OK, check harness for short to ground and short to power.

NG → Check the following.
- Harness for open or short between ECM and engine coolant temperature sensor

If NG, repair open circuit, short to ground or short to power in harness or connectors.

OK ↓

CHECK COMPONENT
(Engine coolant temperature sensor).
Refer to “COMPONENT INSPECTION” on next page.

NG → Replace engine coolant temperature sensor.

OK ↓

Disconnect and reconnect harness connectors in the circuit. Then retest.

Trouble is not fixed. ↓

Check ECM pin terminals for damage and check the connection of ECM harness connector. Reconnect ECM harness connector and retest.

↓

INSPECTION END

Engine Coolant Temperature Sensor (ECTS) (Cont’d)

COMPONENT INSPECTION

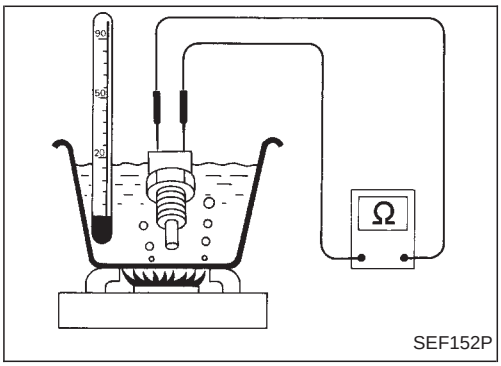

Engine coolant temperature sensor

Check resistance as shown in the figure.

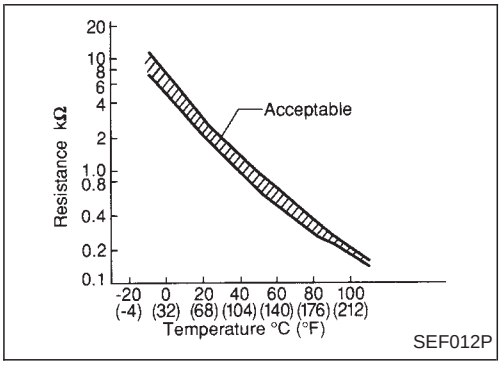

<Reference data>

Temperature °C (°F)	Resistance kΩ
20 (68)	2.1 - 2.9
50 (122)	0.68 - 1.00
90 (194)	0.236 - 0.260

If NG, replace engine coolant temperature sensor.

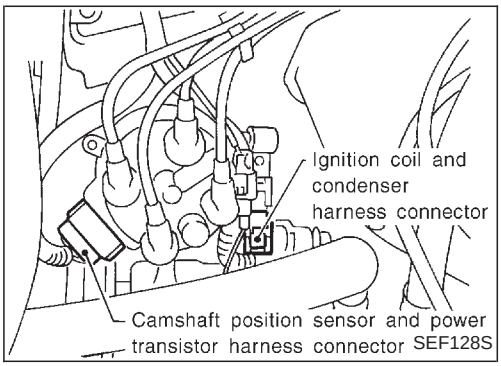

Ignition Signal

COMPONENT DESCRIPTION

Ignition coil & power transistor (Built into distributor)

The ignition signal from the ECM is sent to and amplified by the power transistor. The power transistor turns on and off the ignition coil primary circuit. This on-off operation induces the proper high voltage in the coil secondary circuit.

CONSULT REFERENCE VALUE IN DATA MONITOR MODE

Remarks: Specification data are reference values.

MONITOR ITEM	CONDITION		SPECIFICATION
IGN TIMING	• Engine: After warming up • Air conditioner switch: “OFF” • Shift lever: Neutral position • No-load	Idle	10° BTDC
		2,000 rpm	More than 25° BTDC

ECM TERMINALS AND REFERENCE VALUE

Remarks: Specification data are reference values, and are measured between each terminal and ㊴ (ECCS ground) with a voltmeter.

TER-MINAL NO.	WIRE COLOR	ITEM	CONDITION	DATA (DC voltage)
1	W/PU	Ignition signal	Engine is running. └ Idle speed	Approximately 0.3V 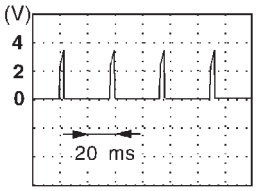 SEF058U
			Engine is running. └ Engine speed is 2,000 rpm.	Approximately 0.7V 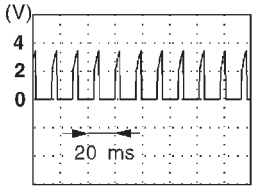 SEF059U

Ignition Signal (Cont’d)

TER-MINAL NO.	WIRE COLOR	ITEM	CONDITION	DATA (DC voltage)
3	W/G	Ignition check	Engine is running. └ Idle speed	Approximately 13V 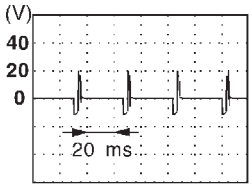 SEF062U
			Engine is running. └ Engine speed is 2,000 rpm.	Approximately 13V 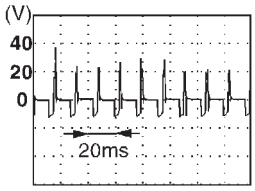 SEF063U

ON BOARD DIAGNOSIS LOGIC

Diagnostic Trouble Code No.	Malfunction is detected when ...	Check Items (Possible Cause)
21	● The ignition signal in the primary circuit is not sent during engine cranking or running.	● Harness or connectors (The ignition primary circuit is open or shorted.) ● Power transistor ● Resistor ● Camshaft position sensor ● Camshaft position sensor circuit

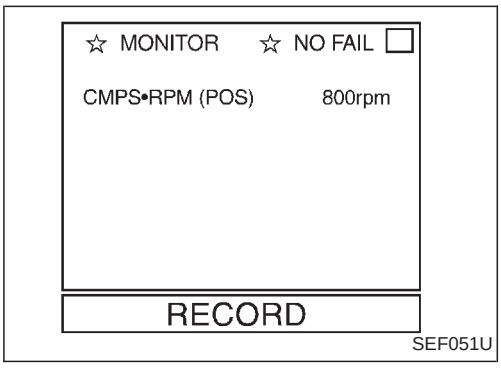

DIAGNOSTIC TROUBLE CODE CONFIRMATION PROCEDURE

Note: If both DTC 21 and DTC 11 are displayed, perform TROUBLE DIAGNOSIS FOR DTC 11 first. (See EC-81.)

1) Turn ignition switch “ON”.
2) Select “DATA MONITOR” mode with CONSULT.
3) Start engine and wait at least 2 seconds. (If engine does not run, turn ignition switch to “START” for at least 5 seconds.)

OR

1) Turn ignition switch “ON”.
2) Start engine and wait at least 2 seconds. (If engine does not run, turn ignition switch to “START” for at least 5 seconds.)
3) Turn ignition switch “OFF”, wait at least 5 seconds and then turn “ON”.
4) Perform “Diagnostic Test Mode II (Self-diagnostic results)” with ECM.

Ignition Signal (Cont’d)

LHD MODELS

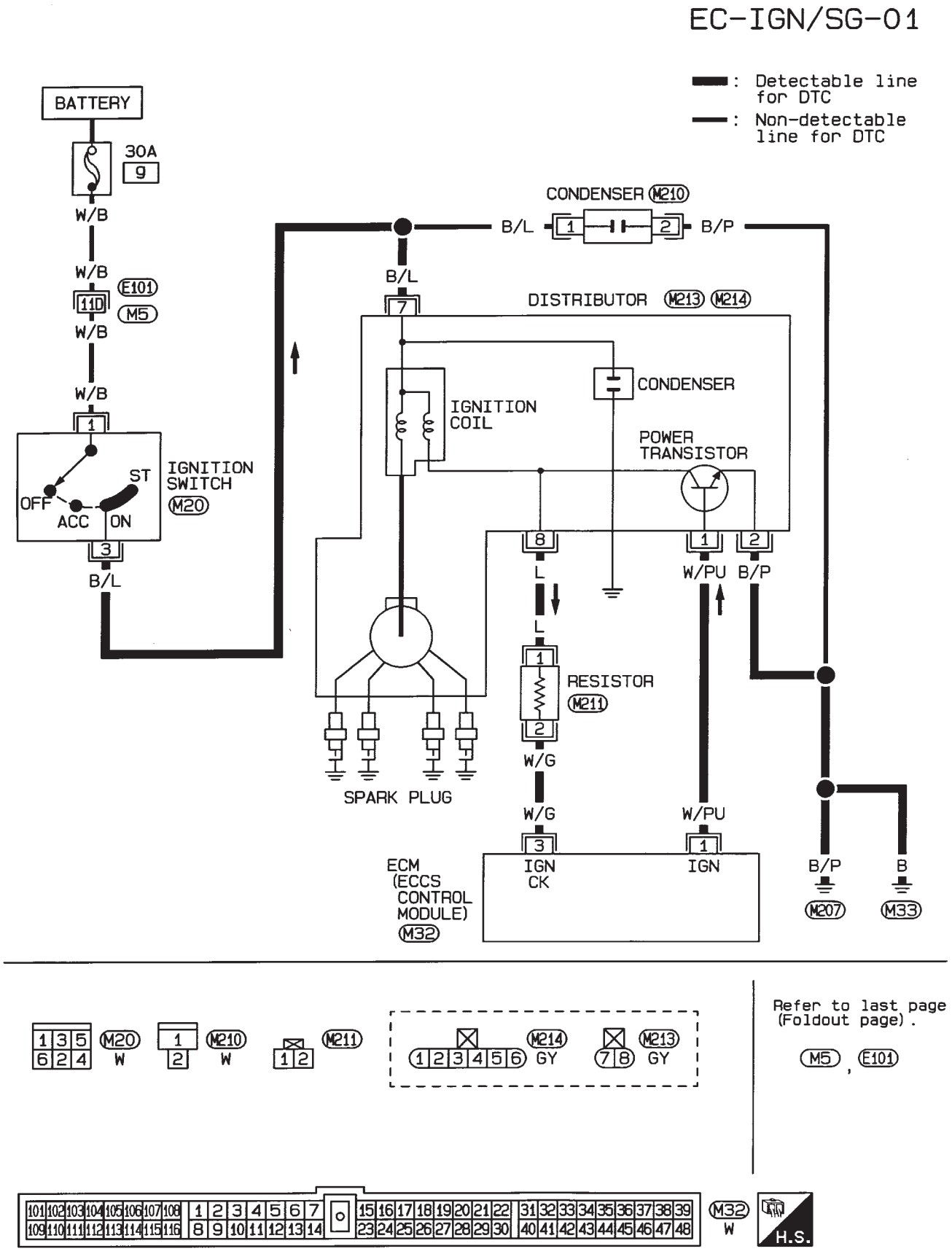

HEC344

Ignition Signal (Cont’d)

RHD MODELS

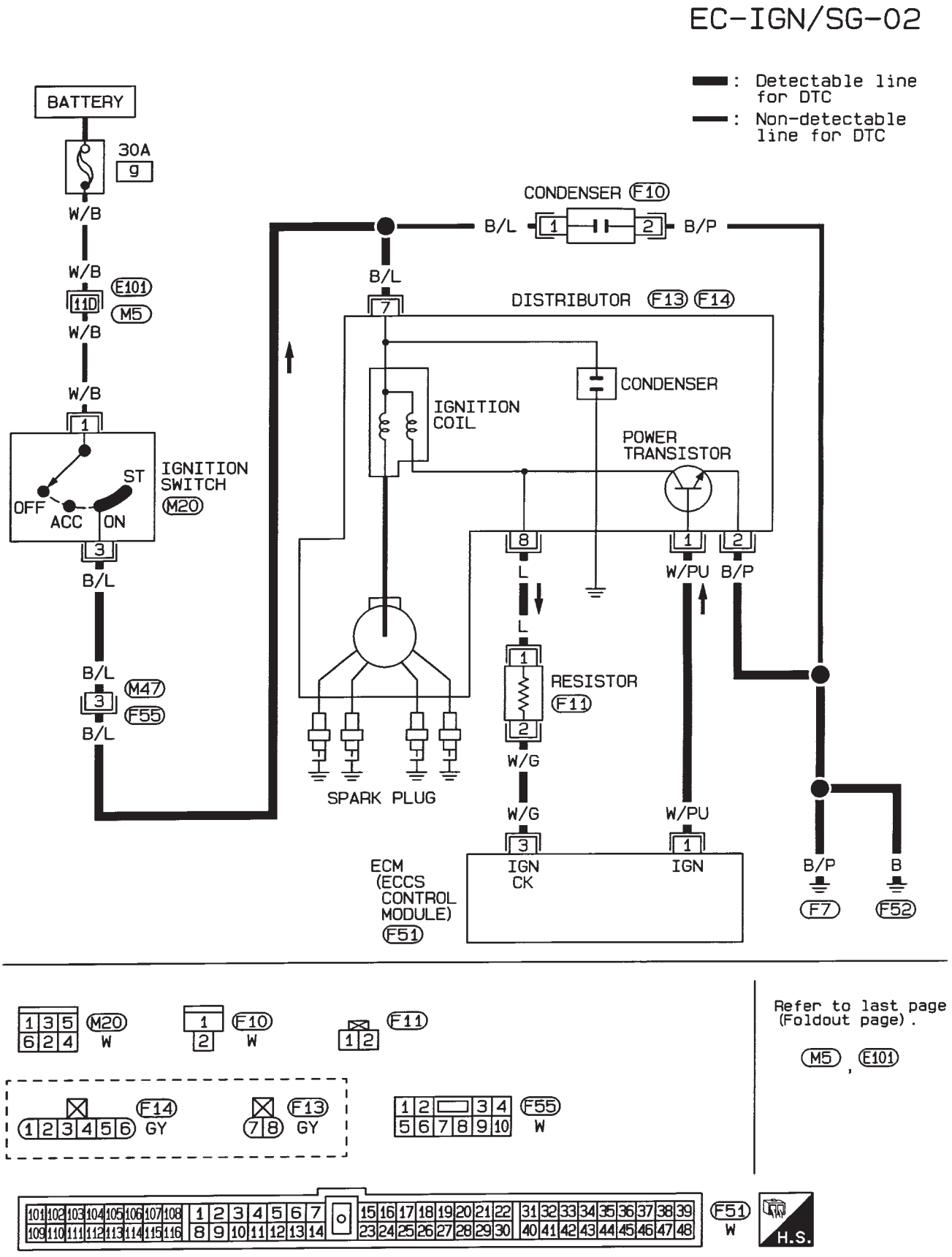

HEC345

Ignition Signal (Cont’d)

DIAGNOSTIC PROCEDURE

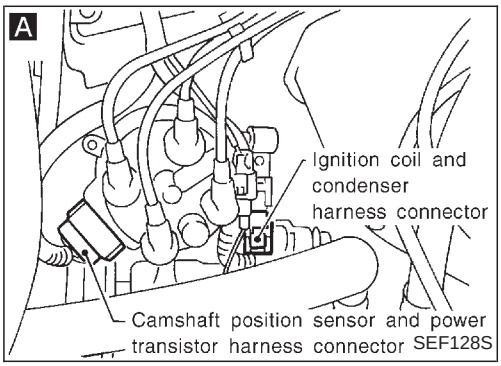

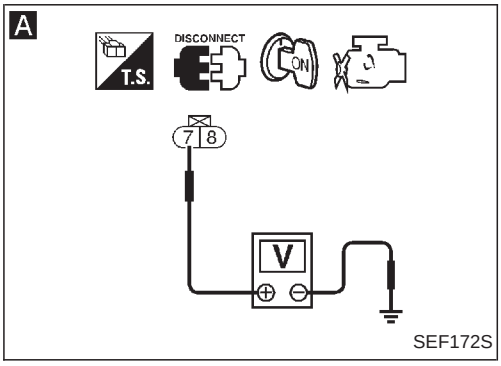

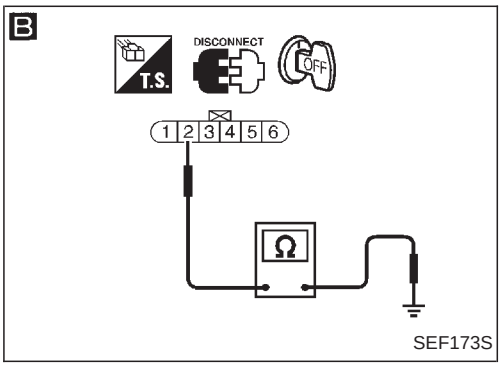

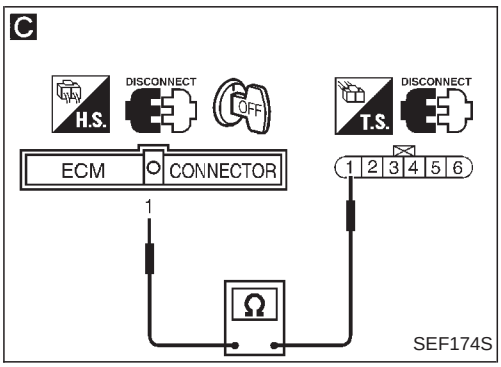

INSPECTION START

↓

Turn ignition switch “OFF”, and restart engine.
Is engine running?

Yes → Ⓐ (Go to next page.)

No ↓

A

CHECK POWER SUPPLY.
1. Turn ignition switch “OFF”.
2. Disconnect ignition coil harness connector.
3. Turn ignition switch “ON”.
4. Check voltage between terminal ⑦ and ground with CONSULT or tester.
   Voltage: Battery voltage

NG → Check the following.
- Harness connectors (F55), (M47) (RHD models)
- Harness for open or short between ignition coil and ignition switch

If NG, repair harness or connectors.

OK ↓

B

CHECK GROUND CIRCUIT.
1. Turn ignition switch “OFF”.
2. Disconnect power transistor harness connector.
3. Check harness continuity between terminal ② and engine ground.
   Continuity should exist.
   If OK, check harness for short to ground and short to power.

NG → Repair open circuit, short to ground or short to power in harness or connectors.

OK ↓

C

CHECK OUTPUT SIGNAL CIRCUIT.
1. Disconnect ECM harness connector.
2. Check harness continuity between ECM terminal ① and terminal ① .
   Continuity should exist.
   If OK, check harness for short to ground and short to power.

NG → Repair open circuit, short to ground or short to power in harness or connectors.

OK ↓

CHECK COMPONENTS
(Ignition coil, power transistor).
Refer to “COMPONENT INSPECTION”, EC-104.

NG → Replace malfunctioning component(s).

OK ↓

Disconnect and reconnect harness connectors in the circuit. Then retest.

Trouble is not fixed. ↓

Check ECM pin terminals for damage and check the connection of ECM harness connector. Reconnect ECM harness connector and retest.

↓

INSPECTION END

Ignition Signal (Cont’d)

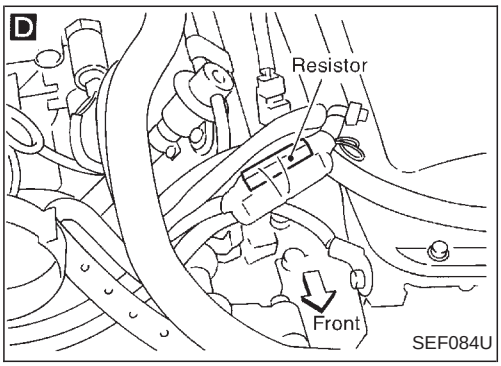

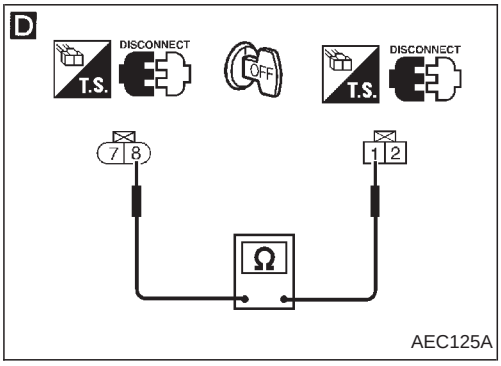

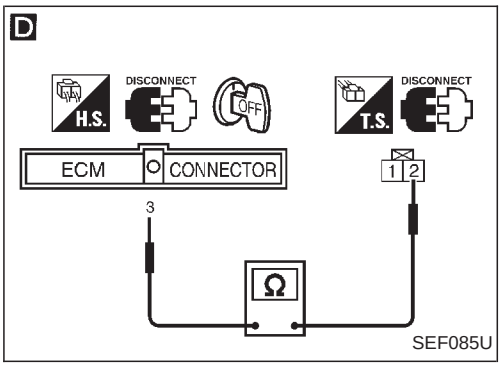

Ⓐ

D

CHECK INPUT SIGNAL CIRCUIT.
1. Stop engine.
2. Disconnect ignition coil harness connector.
3. Strip tape covering resistor.
4. Disconnect resistor harness connector.
5. Disconnect ECM harness connector.
6. Check harness continuity between terminal ⑧ and terminal ①, terminal ② and ECM terminal ③.
   Continuity should exist.
   If OK, check harness for short to ground and short to power.

NG → Repair open circuit, short to ground or short to power in harness or connectors.

OK ↓

CHECK COMPONENT (Resistor).
Refer to “COMPONENT INSPECTION” on next page.

NG → Replace resistor.

OK ↓

Disconnect and reconnect harness connectors in the circuit. Then retest.

Trouble is not fixed. ↓

Check ECM pin terminals for damage and check the connection of ECM harness connector. Reconnect ECM harness connector and retest.

↓

INSPECTION END

Ignition Signal (Cont’d)

COMPONENT INSPECTION

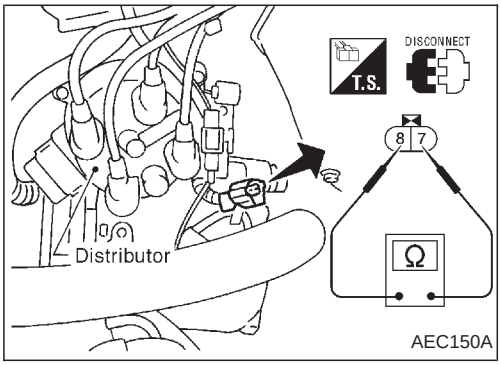

AEC150A

Ignition coil

1. Disconnect ignition coil harness connector.
2. Remove distributor cap.
3. Check resistance as shown in the figure.

Terminal	Resistance [at 25°C (77°F)]
⑦ - ⑧	Less than 1Ω
⑦ - ⑨	7 - 13 kΩ

If NG, replace distributor assembly.

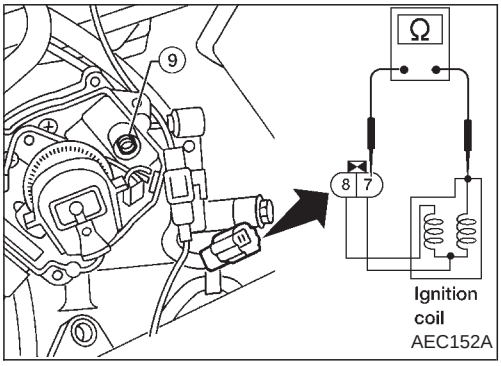

AEC152A

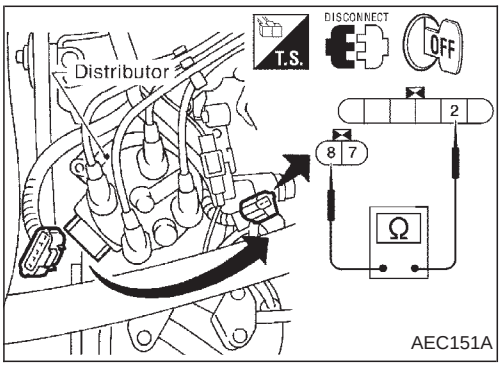

AEC151A

Power transistor

1. Disconnect camshaft position sensor & power transistor harness connector and ignition coil harness connector.
2. Check power transistor resistance between terminals ② and ⑧ .

Terminals	Resistance	Result
② and ⑧	Except 0Ω	OK
	0Ω	NG

If NG, replace distributor assembly.

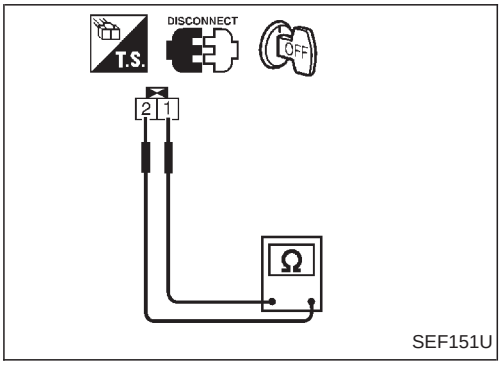

SEF151U

Resistor

1. Disconnect resistor harness connector.
2. Check resistance between terminals ① and ② .
   Resistance: Approximately 2.2 kΩ

   If NG, replace resistor.

Overheat

ON BOARD DIAGNOSIS LOGIC

If the cooling fan or another component in the cooling system malfunctions, the engine coolant temperature will rise.
When the engine coolant temperature reaches an abnormally high temperature condition, a malfunction is indicated.

Diagnostic trouble code No.	Malfunction is detected when ...	Check Items (Possible Cause)
28	● Engine coolant temperature reaches an abnormally high temperature.	● Cooling fan ● Radiator hose ● Radiator ● Radiator cap ● Water pump ● Thermostat For more information, refer to “MAIN 12 CAUSES OF OVERHEATING”, EC-107.

CAUTION:
When a malfunction is indicated, be sure to replace the coolant following the procedure in MA section (“Changing Engine Coolant”, “ENGINE MAINTENANCE”). Also, replace the engine oil.
- **Fill radiator with coolant up to specified level with a filling speed of 2 liters per minute like pouring coolant by kettle. Be sure to use coolant with the proper mixture ratio. Refer to MA section (“Anti-freeze Coolant Mixture Ratio”, “RECOMMENDED FLUIDS AND LUBRICANTS”).**
- **After refilling coolant, run engine to ensure that no water-flow noise is emitted.**

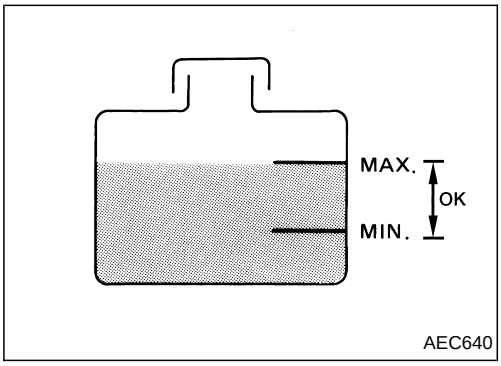

OVERALL FUNCTION CHECK

WARNING:
Never remove the radiator cap when the engine is hot. Serious burns could be caused by high pressure fluid escaping from the radiator.
Wrap a thick cloth around cap. Carefully remove the cap by turning it a quarter turn to allow built-up pressure to escape. Then turn the cap all the way off.

1. Check the coolant level in the reservoir tank and radiator.
   Allow engine to cool before checking coolant level.
   If the coolant level in the reservoir tank and/or radiator is below the proper range, skip the following step and go to “DIAGNOSTIC PROCEDURE” on next page.
2. Confirm whether customer filled the coolant or not. If customer filled the coolant, go to “DIAGNOSTIC PROCEDURE” on next page.

Overheat (Cont’d)

DIAGNOSTIC PROCEDURE

A

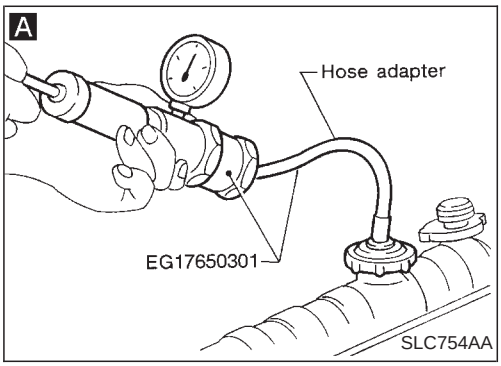

B

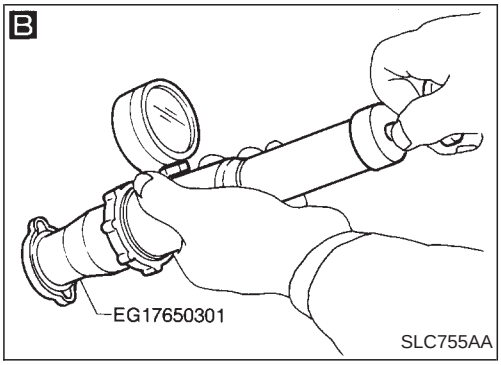

C

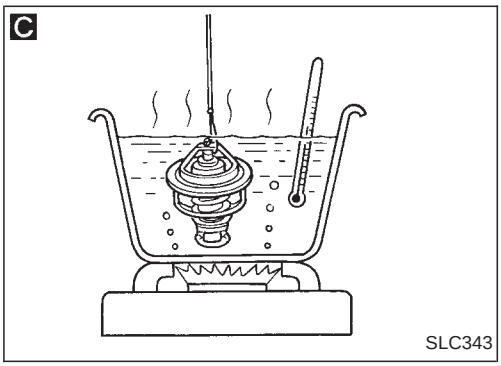

INSPECTION START

↓

A

CHECK COOLING SYSTEM FOR LEAK.
Apply pressure to the cooling system with a tester, and check if the pressure drops.
Testing pressure:
157 kPa (1.57 bar, 1.6 kg/cm^2, 23 psi)
Pressure should not drop.
CAUTION:
Higher than the specified pressure may cause radiator damage.

NG → Check the following for leak.
- Hose
- Radiator
- Water pump

Refer to LC section (“Water Pump”).

OK ↓

B

CHECK RADIATOR CAP.
Apply pressure to cap with a tester.
Radiator cap relief pressure:
78 - 98 kPa (0.78 - 0.98 bar, 0.8 - 1.0 kg/cm^2 , 11 - 14 psi)

NG → Replace radiator cap.

OK ↓

C

CHECK THERMOSTAT.
1. Check valve seating condition at normal room temperatures.
   It should seat tightly.
2. Check valve opening temperature and valve lift.
   Valve opening temperature:
   76.5°C (170°F) [standard]
   Valve lift:
   More than 10 mm/90°C (0.39 in/194°F)
3. Check if valve is closed at 5°C (9°F) below valve opening temperature.

For details, refer to LC section (“Thermostat”).

NG → Replace thermostat.

OK ↓

Check engine coolant temperature sensor. Refer to “COMPONENT INSPECTION”, EC-97.

NG → Replace engine coolant temperature sensor.

OK ↓

If the cause cannot be isolated, go to “MAIN 12 CAUSES OF OVERHEATING” on next page.

↓

INSPECTION END

Perform FINAL CHECK by the following procedure after repair is completed.

1. Warm up engine. Run the vehicle for at least 20 minutes. Pay attention to engine coolant temperature gauge on the instrument panel. If the reading shows an abnormally high temperature, another part may be malfunctioning.
2. Stop vehicle and let engine idle. Check the intake and exhaust systems for leaks by listening for noise or visually inspecting the components.
3. Allow engine to cool and visually check for oil and coolant leaks. Then, perform “OVERALL FUNCTION CHECK”.

Overheat (Cont’d)

MAIN 12 CAUSES OF OVERHEATING

Engine	Step	Inspection item	Equipment	Standard	Reference page
OFF	1	● Blocked radiator ● Blocked condenser ● Blocked radiator grille ● Blocked bumper	● Visual	No blocking	—
	2	● Coolant mixture	● Coolant tester	50 - 50% coolant mixture	See “RECOMMENDED FLUIDS AND LUBRICANTS” in MA section.
	3	● Coolant level	● Visual	Coolant up to MAX level in reservoir tank and radiator filler neck	See “Changing Engine Coolant”, “ENGINE MAINTENANCE” in MA section.
	4	● Radiator cap	● Pressure tester	78 - 98 kPa (0.78 - 0.98 bar, 0.8 - 1.0 kg/cm^2, 11 - 14 psi) 59 - 98 kPa (0.59 - 0.98 bar, 0.6 - 1.0 kg/cm^2, 9 - 14 psi) (Limit)	See “System Check”, “ENGINE COOLING SYSTEM” in LC section.
ON*2	5	● Coolant leaks	● Visual	No leaks	See “System Check”, “ENGINE COOLING SYSTEM” in LC section.
ON*2	6	● Thermostat	● Touch the upper and lower radiator hoses	Both hoses should be hot.	See “Thermostat” and “Radiator”, “ENGINE COOLING SYSTEM” in LC section.
ON*1	7	● Cooling fan	● Visual	Operating	See “Cooling Fan”, “ENGINE COOLING SYSTEM” in LC section.
OFF	8	● Combustion gas leak	● Color checker chemical tester 4 gas analyzer	Negative	—
ON*3	9	● Coolant temperature gauge	● Visual	Gauge less than 3/4 when driving	—
		● Coolant overflow to reservoir tank	● Visual	No overflow during driving and idling	See “Changing Engine Coolant”, “ENGINE MAINTENANCE” in MA section.
OFF*4	10	● Coolant return from reservoir tank to radiator	● Visual	Should be initial level in reservoir tank	See “ENGINE MAINTENANCE” in MA section.
OFF	11	● Cylinder head	● Straight gauge feeler gauge	0.1 mm (0.004 in) Maximum distortion (warping)	See “Inspection”, “CYLINDER HEAD” in EM section.
	12	● Cylinder block and pistons	● Visual	No scuffing on cylinder walls or piston	See “Inspection”, “CYLINDER BLOCK” in EM section.

*1: Engine running at idle.
*2: Engine running at 3,000 rpm for 10 minutes.
*3: Drive at 90 km/h (55 MPH) for 30 minutes and then let idle for 10 minutes.
*4: After 60 minutes of cool down time.
For more information, refer to “OVERHEATING CAUSE ANALYSIS” in LC section.

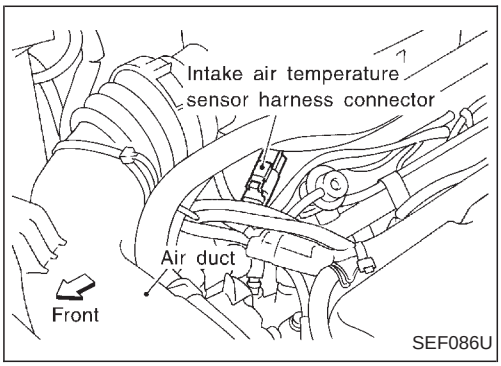

Intake Air Temperature Sensor

The intake air temperature sensor is mounted to the air duct. The sensor detects intake air temperature and transmits a signal to the ECM.

The temperature sensing unit uses a thermistor, which is sensitive to the change in temperature. Electrical resistance of the thermistor decreases in response to the temperature rise.

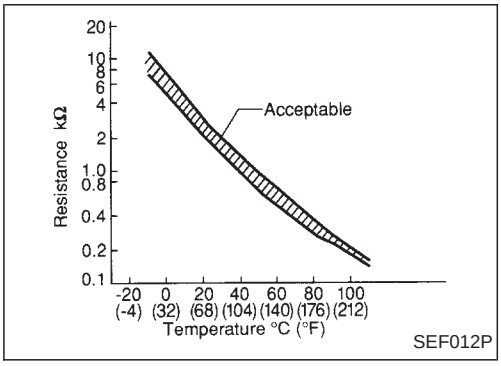

<Reference data>

Intake air temperature °C (°F)	Resistance kΩ
−10 (14)	7.0 - 11.4
20 (68)	2.1 - 2.9
80 (176)	0.27 - 0.38

ON BOARD DIAGNOSIS LOGIC

Diagnostic Trouble Code No.	Malfunction is detected when ...	Check Items (Possible Cause)
41	● An excessively low or high voltage from the sensor is sent to ECM*.	● Harness or connectors (The sensor circuit is open or shorted.) ● Intake air temperature sensor

*: When this malfunction is detected, the ECM enters fail-safe mode.

Engine operating condition in fail-safe mode	The ECM controls on the assumption that the intake temperature is 20°C (68°F).

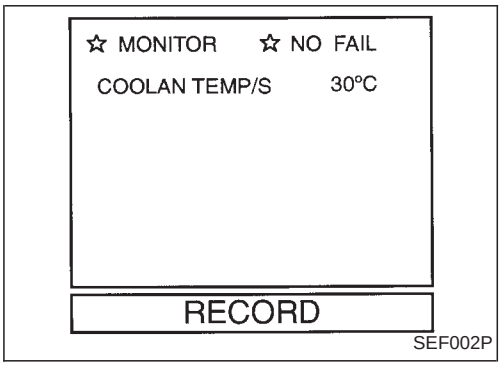

DIAGNOSTIC TROUBLE CODE CONFIRMATION PROCEDURE

1) Turn ignition switch “ON”.
2) Select “DATA MONITOR” mode with CONSULT.
3) Wait at least 2 seconds.

OR

1) Turn ignition switch “ON” and wait at least 2 seconds.
2) Turn ignition switch “OFF”, wait at least 5 seconds and then turn “ON”.
3) Perform “Diagnostic Test Mode II (Self-diagnostic results)” with ECM.

Intake Air Temperature Sensor (Cont’d)

EC-IATS-01

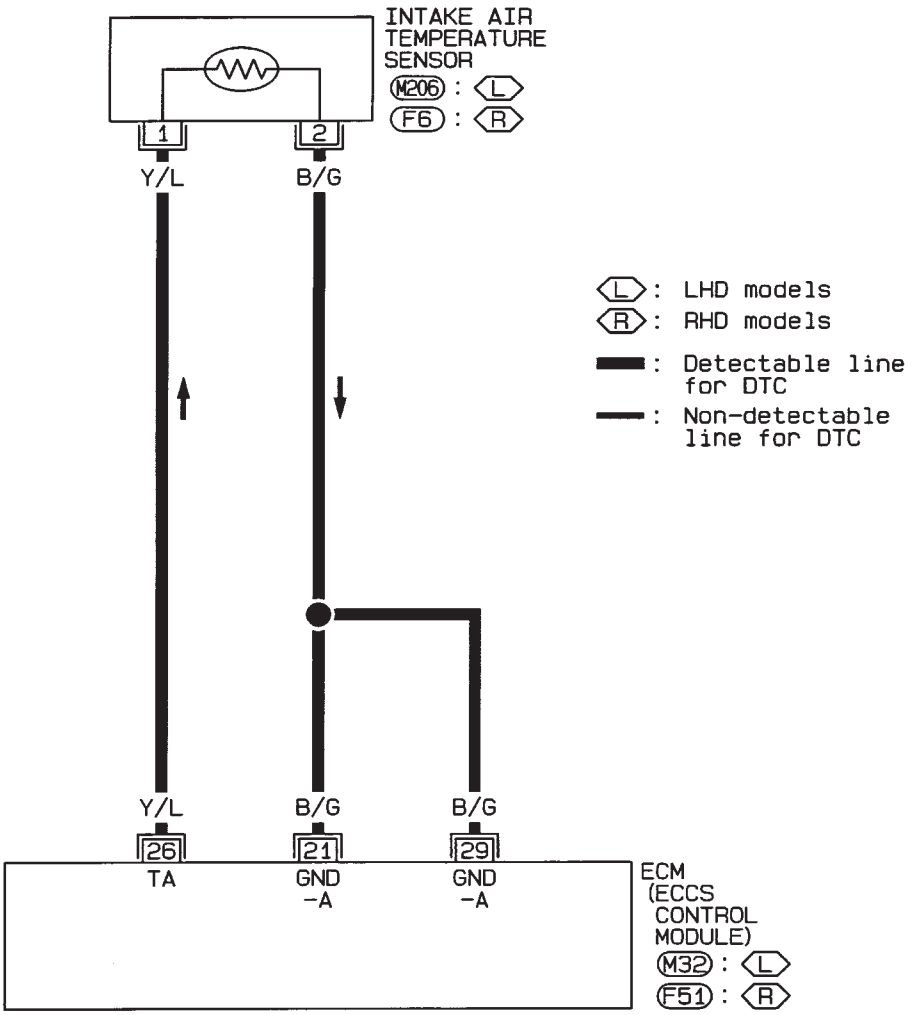

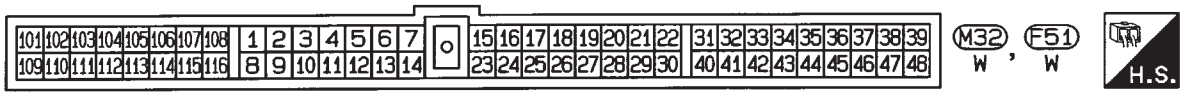

HEC346

Intake Air Temperature Sensor (Cont’d)

DIAGNOSTIC PROCEDURE

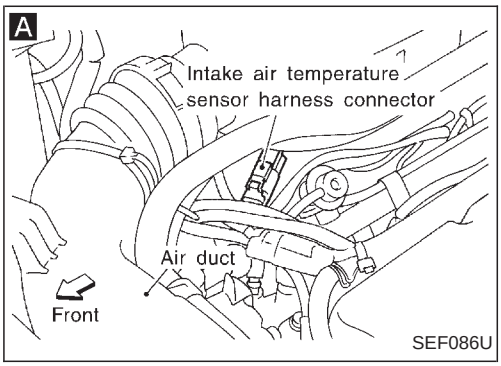

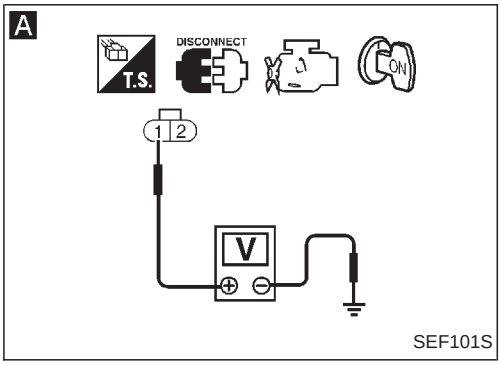

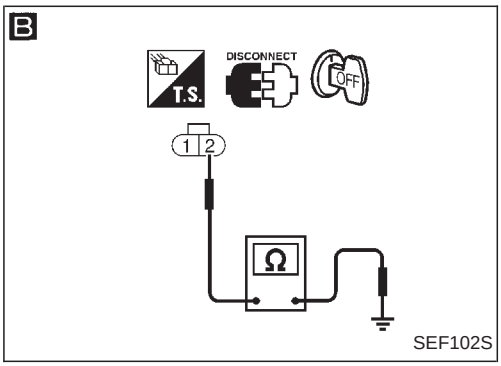

INSPECTION START

A

CHECK POWER SUPPLY.
1. Turn ignition switch “OFF”.
2. Disconnect intake air temperature sensor harness connector.
3. Turn ignition switch “ON”.
4. Check voltage between terminal ① and ground.
   Voltage:
   Approximately 5V

NG → Repair harness or connectors.

OK ↓

B

CHECK GROUND CIRCUIT.
1. Turn ignition switch “OFF”.
2. Check harness continuity between terminal ② and engine ground.
   Continuity should exist.
   If OK, check harness for short to ground and short to power.

NG → Check the following.
- Harness for open or short between ECM and intake air temperature sensor

If NG, repair open circuit, short to ground or short to power in harness or connectors.

OK ↓

CHECK COMPONENT
(Intake air temperature sensor).
Refer to “COMPONENT INSPECTION” on next page.

NG → Replace intake air temperature sensor.

OK ↓

Disconnect and reconnect harness connectors in the circuit. Then retest.

Trouble is not fixed. ↓

Check ECM pin terminals for damage and check the connection of ECM harness connector.
Reconnect ECM harness connector and retest.

INSPECTION END

Intake Air Temperature Sensor (Cont’d)

COMPONENT INSPECTION

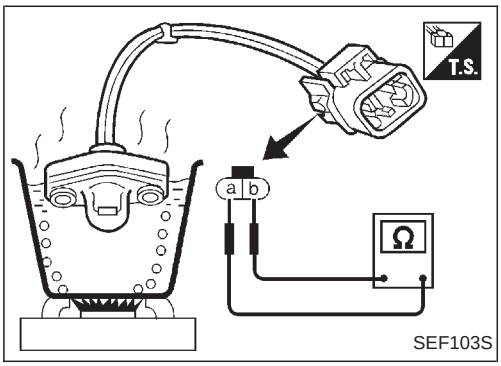

Intake air temperature sensor

Check resistance as shown in the figure.

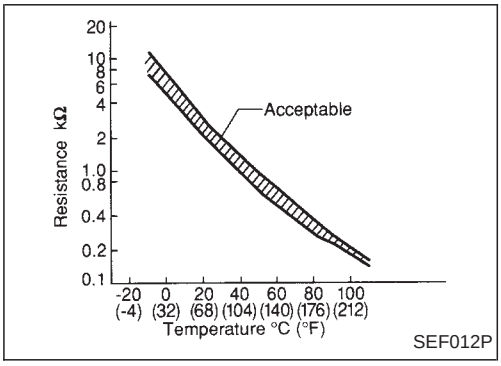

<Reference data>

Intake air temperature °C (°F)	Resistance kΩ
20 (68)	2.1 - 2.9
80 (176)	0.27 - 0.38

If NG, replace intake air temperature sensor.

Throttle Position Sensor

COMPONENT DESCRIPTION

The throttle position sensor responds to the accelerator pedal movement. This sensor is a kind of potentiometer which transforms the throttle position into output voltage, and emits the voltage signal to the ECM. In addition, the sensor detects the opening and closing speed of the throttle valve and feeds the voltage signal to the ECM.
Idle position of the throttle valve is determined by the ECM receiving the signal from the throttle position sensor. This one controls engine operation such as fuel cut.

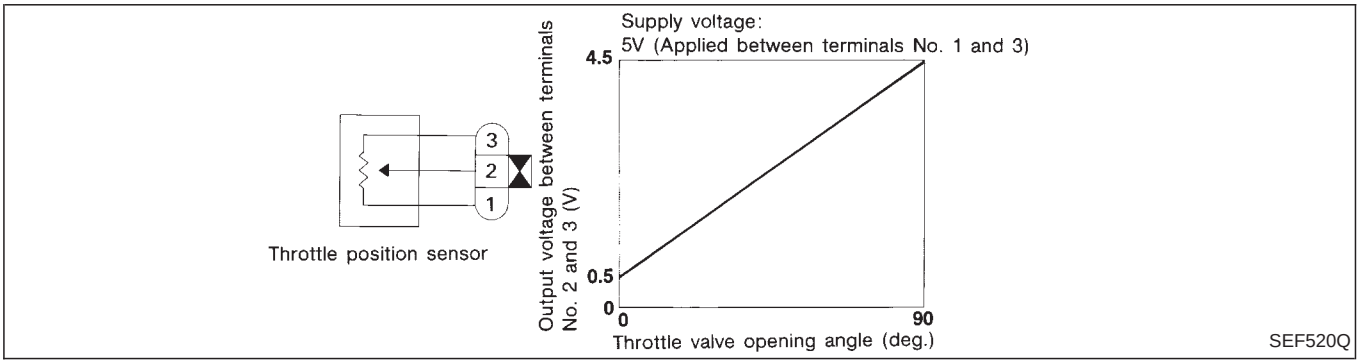

CONSULT REFERENCE VALUE IN DATA MONITOR MODE

Remarks: Specification data are reference values.

MONITOR ITEM	CONDITION		SPECIFICATION
THRTL POS SEN	● Ignition switch: ON (Engine stopped)	Throttle valve: fully closed	0.35 - 0.65V
		Throttle valve: fully opened	Approx. 4.0V
CLSD THL/POSI	● Ignition switch: ON (Engine stopped)	Throttle valve: Idle position	ON
		Throttle valve: Slightly open	OFF

ECM TERMINALS AND REFERENCE VALUE

Remarks: Specification data are reference values, and are measured between each terminal and ㊴ (ECCS ground) with a voltmeter.

TERMINAL NO.	WIRE COLOR	ITEM	CONDITION	DATA (DC voltage)
20	LG	Throttle position sensor signal	Ignition switch “ON” (Warm-up condition) └ Accelerator pedal released	0.35 - 0.65V
			Ignition switch “ON” └ Accelerator pedal fully depressed	Approximately 4V
37	PU	Throttle position sensor power supply	Ignition switch “ON”	Approximately 5V
21 29	B/G B/G	Sensors’ ground	Engine is running. (Warm-up condition) └ Idle speed	0.001 - 0.02V

Throttle Position Sensor (Cont’d)

ON BOARD DIAGNOSIS LOGIC

Diagnostic Trouble Code No.	Malfunction is detected when ...	Check Items (Possible Cause)
43	● An excessively low or high voltage from the sensor is sent to ECM.*	● Harness or connectors (The sensor circuit is open or shorted.) ● Throttle position sensor

*: When this malfunction is detected, the ECM enters fail-safe mode.

Engine operating condition in fail-safe mode	Condition	Driving condition
Throttle position will be determined based on the amount of mass air flow and the engine speed. Therefore, acceleration will be poor.	When engine is idling	Normal
	When accelerating	Poor acceleration

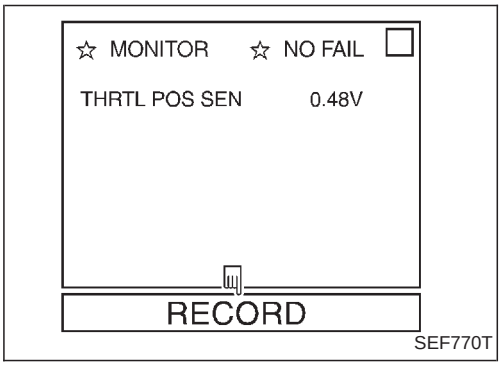

SEF770T

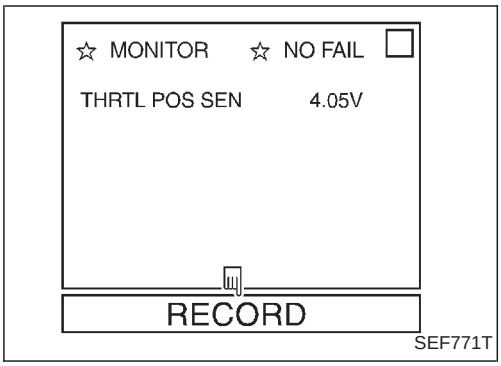

SEF771T

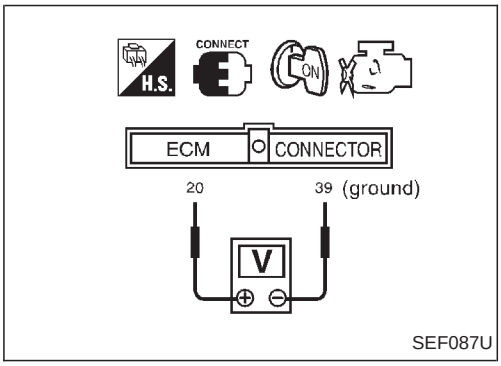

SEF087U

OVERALL FUNCTION CHECK

Use this procedure to check the overall function of the throttle position sensor circuit. During this check, a DTC might not be confirmed.

1) Start engine and warm it up sufficiently.
2) Turn ignition switch “OFF” and wait at least 5 seconds.
3) Turn ignition switch “ON”.
4) Select “THRTL POS SEN” in “DATA MONITOR” mode with CONSULT.
5) Read “THRTL POS SEN” signal and check the following:
   - The voltage when accelerator pedal fully released is approximately 0.35 - 0.65V.
   - The voltage when accelerator pedal fully depressed is approximately 4V.

OR

1) Start engine and warm it up sufficiently.
2) Turn ignition switch “OFF” and wait at least 5 seconds.
3) Turn ignition switch “ON”.
4) Check the voltage between ECM terminals ⑳ and ㊴ (ground) and check the following:
   - The voltage when accelerator pedal fully released is approximately 0.35 - 0.65V.
   - The voltage when accelerator pedal fully depressed is approximately 4V.

Throttle Position Sensor (Cont’d)

EC-TPS-01

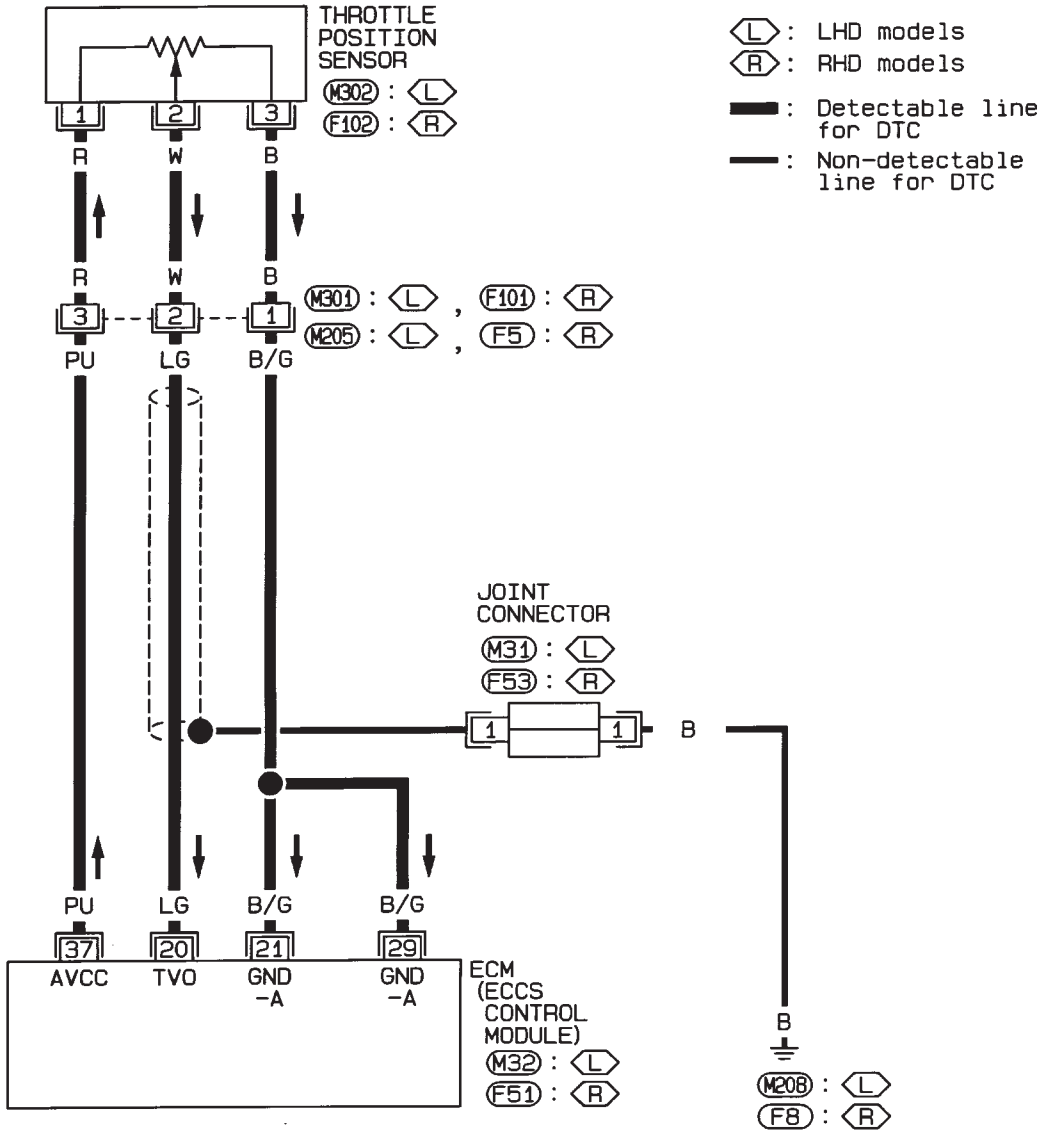

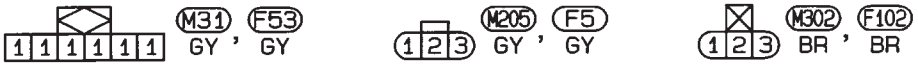

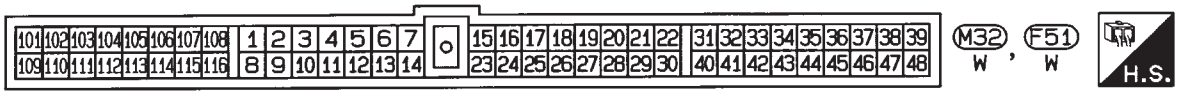

HEC347

Throttle Position Sensor (Cont’d)

DIAGNOSTIC PROCEDURE

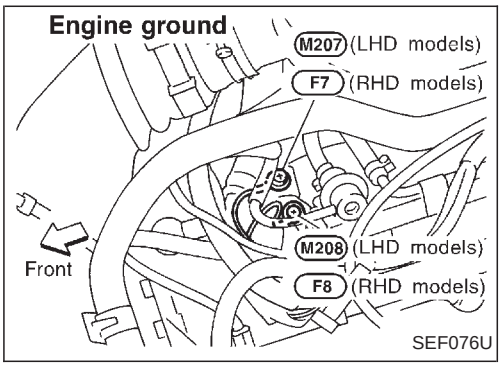

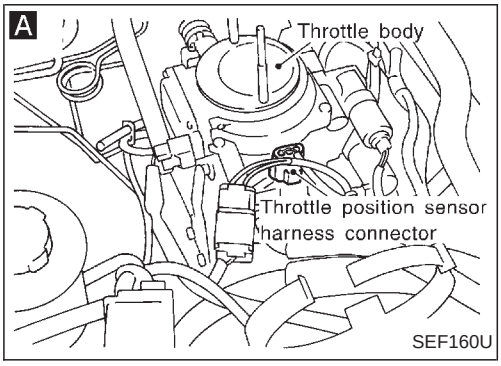

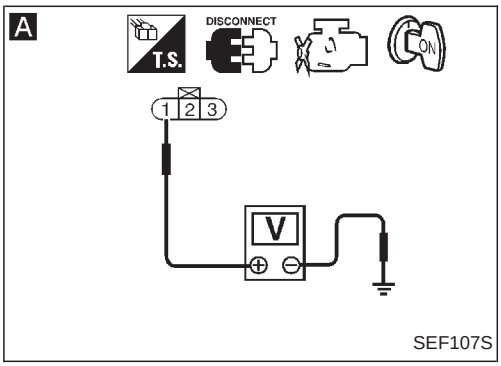

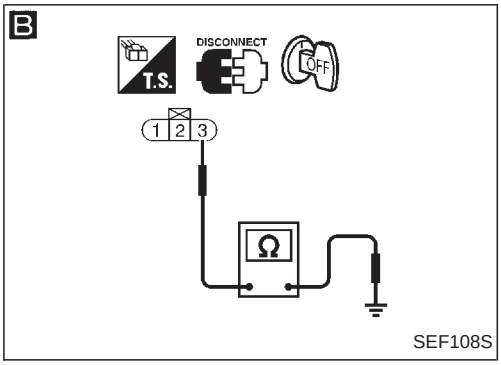

INSPECTION START

↓

ADJUST THROTTLE POSITION SENSOR.
Perform BASIC INSPECTION, EC-58.

↓ OK

CHECK SHIELD CIRCUIT.
1. Turn ignition switch “OFF”.
2. Loosen and retighten engine ground screws.
3. Remove joint connector (M31) or (F53).
4. Check the following.
   - Continuity between joint connector terminal ① and ground
   - Joint connector
     (Refer to “HARNESS LAYOUT” in EL section.)

   Continuity should exist.
   If OK, check harness for short to ground and short to power. Then reconnect joint connector.

NG → Repair open circuit, short to ground or short to power in harness or connectors.

↓ OK

A

CHECK POWER SUPPLY.
1. Disconnect throttle position sensor harness connector.
2. Turn ignition switch “ON”.
3. Check voltage between terminal ① and ground with CONSULT or tester.
   Voltage: Approximately 5V

NG → Check the following.
- Harness connectors (M205), (M301) (LHD models)
  (F5), (F101) (RHD models)
- Harness for open or short between throttle position sensor and ECM

If NG, repair harness or connectors.

↓ OK

B

CHECK GROUND CIRCUIT.
1. Turn ignition switch “OFF”.
2. Check harness continuity between terminal ③ and engine ground.
   Continuity should exist.
   If OK, check harness for short to ground and short to power.

NG → Check the following.
- Harness connectors (M205), (M301) (LHD models)
  (F5), (F101) (RHD models)
- Harness for open or short between throttle position sensor and ECM

If NG, repair open circuit, short to ground or short to power in harness or connectors.

↓ OK

Ⓐ

Throttle Position Sensor (Cont’d)

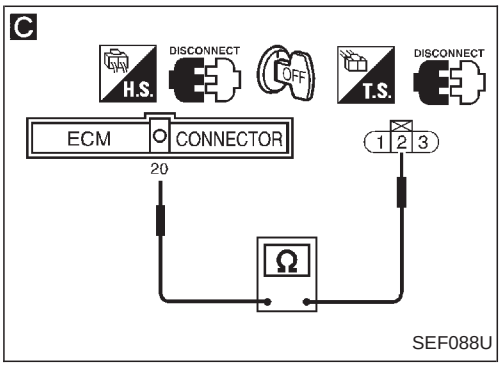

Ⓐ

C

CHECK INPUT SIGNAL CIRCUIT.
1. Disconnect ECM harness connector.
2. Check harness continuity between ECM terminal ⑳ and terminal ②.
   Continuity should exist.
   If OK, check harness for short to ground and short to power.

NG → Check the following.
- Harness connectors (M205), (M301) (LHD models)
  (F5), (F101) (RHD models)
- Harness for open or short between throttle position sensor and ECM

If NG, repair open circuit, short to ground or short to power in harness or connectors.

OK ↓

CHECK COMPONENT
(Throttle position sensor).
Refer to “COMPONENT INSPECTION” below.

NG → Replace throttle position sensor. To adjust it, perform BASIC INSPECTION, EC-58.

OK ↓

Disconnect and reconnect harness connectors in the circuit. Then retest.

Trouble is not fixed. ↓

Check ECM pin terminals for damage and check the connection of ECM harness connector.
Reconnect ECM harness connector and retest.

↓

INSPECTION END

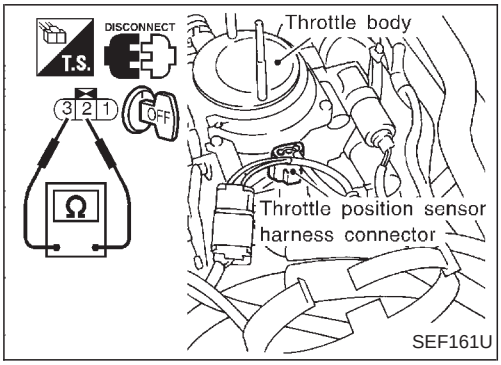

COMPONENT INSPECTION

Throttle position sensor

1. Start engine and warm it up sufficiently.
2. Turn ignition switch “OFF”.
3. Disconnect throttle position sensor harness connector.
4. Make sure that resistance between terminals ② and ③ changes when opening throttle valve manually.

Throttle valve conditions	Resistance at 25°C (77°F)
Completely closed	Approximately 0.6 kΩ
Partially open	0.6 - 4.0 kΩ
Completely open	Approximately 4 kΩ

If NG, replace throttle position sensor.
To adjust throttle position sensor, perform “BASIC INSPECTION”, EC-58.

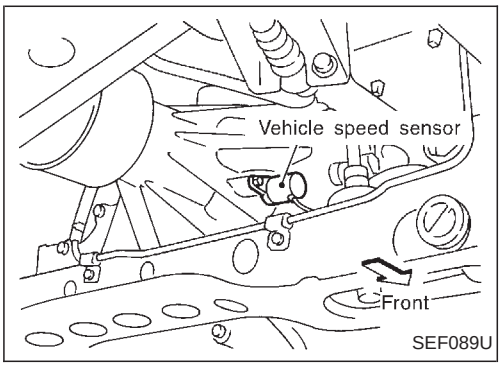

Vehicle Speed Sensor (VSS)

COMPONENT DESCRIPTION

The vehicle speed sensor is installed in the transmission. It contains a pulse generator which provides a vehicle speed signal to the speedometer. The speedometer then sends a signal to the ECM.

ECM TERMINALS AND REFERENCE VALUE

Remarks: Specification data are reference values, and are measured between each terminal and ㊴ (ECCS ground) with a voltmeter.

TERMINAL NO.	WIRE COLOR	ITEM	CONDITION	DATA (DC voltage)
32	W/L	Vehicle speed sensor	Engine is running. └ Jack up all wheels and run engine at idle in 1st position.	Varies from 0 to 5V 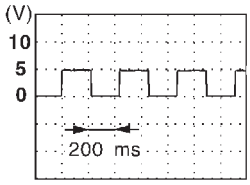 SEF068U

Vehicle Speed Sensor (VSS) (Cont'd)

LHD MODELS

EC-VSS-01

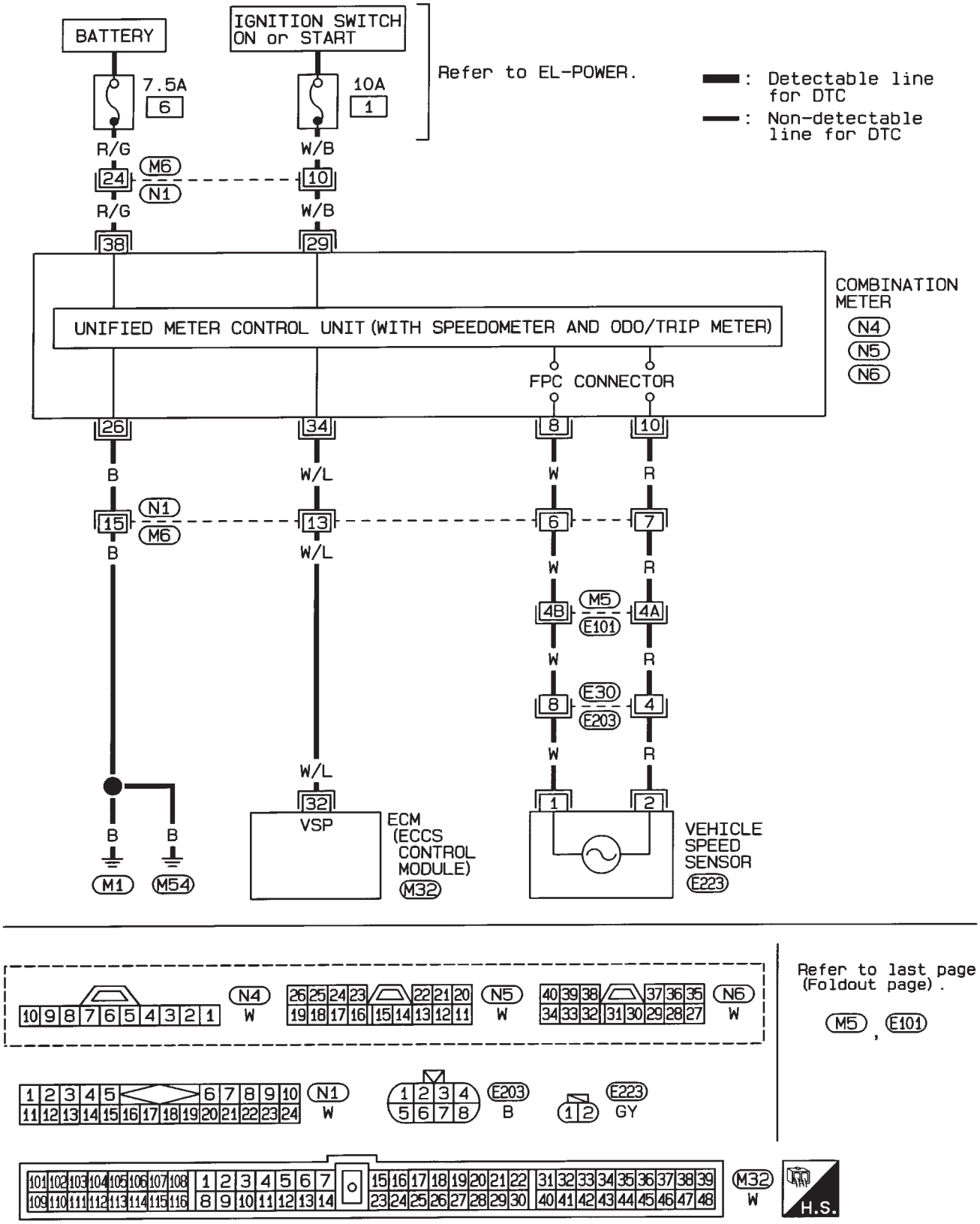

HEC407

Vehicle Speed Sensor (VSS) (Cont'd)

RHD MODELS

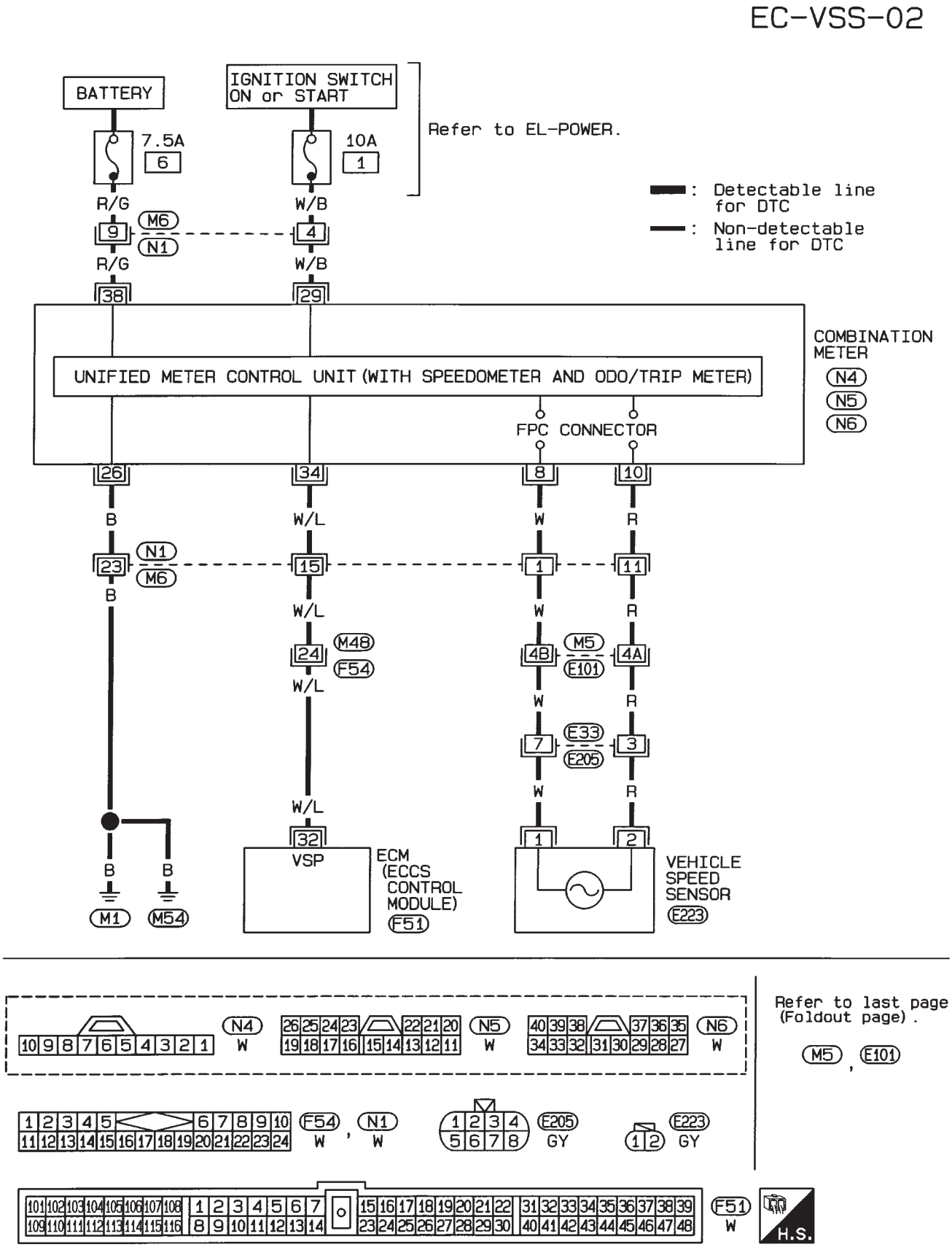

HEC408

Vehicle Speed Sensor (VSS) (Cont'd)

DIAGNOSTIC PROCEDURE

A

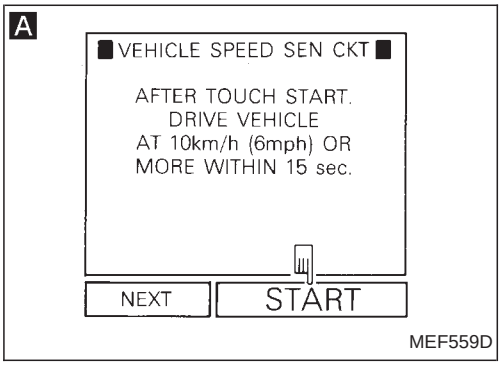

A

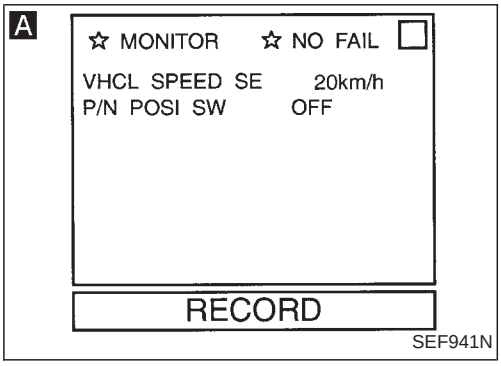

A

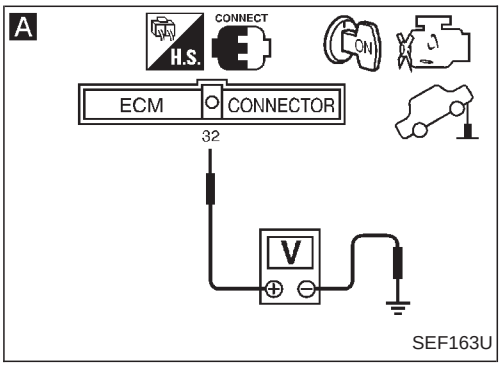

B

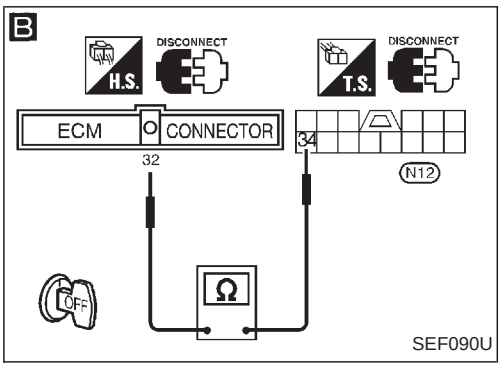

INSPECTION START

A

CHECK OVERALL FUNCTION.
1. Lift up the vehicle.
2. Start engine.
3. Perform "VEHICLE SPEED SEN CKT" in "FUNCTION TEST" mode with CONSULT.

OR

2. Start engine.
3. Read "VHCL SPEED SE" signal in "DATA MONITOR" mode with CONSULT.
The vehicle speed on CONSULT should be able to exceed 10 km/h (6 MPH) when rotating wheels with suitable gear position.

OR

2. Turn ignition switch "ON".
3. Rotate drive wheel by hand.
4. Check voltage between ECM terminal ㉜ and ground.
Voltage should vary between approx. 0 - 5V.

OK → INSPECTION END

NG ↓

B

CHECK INPUT SIGNAL CIRCUIT.
1. Turn ignition switch "OFF".
2. Disconnect ECM harness connector and combination meter harness connector.
3. Check harness continuity between ECM terminal ㉜ and terminal ㉞.
Continuity should exist.
If OK, check harness for short to ground and short to power.

NG →
Check the following.
- Harness connectors (F54), (M48) (RHD models)
- Harness connectors (M6), (N1)
- Harness for open or short between ECM and combination meter

If NG, repair open circuit, short to ground or short to power in harness or connectors.

OK ↓

CHECK SPEEDOMETER FUNCTION.
Make sure that speedometer functions properly.

NG →
Check the following.
- Harness for open or short between combination meter and vehicle speed sensor

If NG, repair harness or connectors.
- Vehicle speed sensor and its circuit (Refer to EL section.)

OK ↓

Ⓐ

Vehicle Speed Sensor (VSS) (Cont'd)

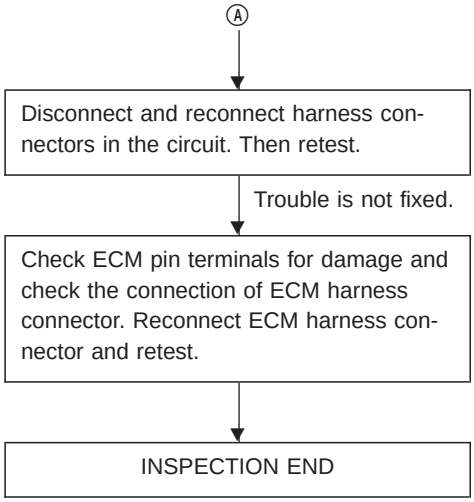

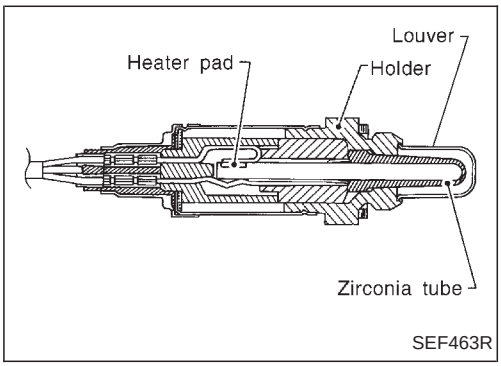

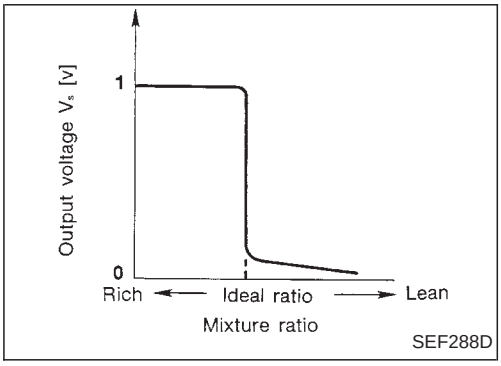

Heated Oxygen Sensor (HO2S) — LHD Models —

COMPONENT DESCRIPTION

The heated oxygen sensor is placed into the front exhaust tube. It detects the amount of oxygen in the exhaust gas compared to the outside air. The heated oxygen sensor has a closed-end tube made of ceramic zirconia. The zirconia generates voltage from approximately 1V in richer conditions to 0V in leaner conditions. The heated oxygen sensor signal is sent to the ECM. The ECM adjusts the injection pulse duration to achieve the ideal air-fuel ratio. The ideal air-fuel ratio occurs near the radical change from 1V to 0V.

CONSULT REFERENCE VALUE IN DATA MONITOR MODE

Remarks: Specification data are reference values.

MONITOR ITEM	CONDITION		SPECIFICATION
O2 SEN	● Engine: After warming up	Maintaining engine speed at 2,000 rpm	0 - 0.3V ↔ 0.6 - 1.0V

ECM TERMINALS AND REFERENCE VALUE

Remarks: Specification data are reference values, and are measured between each terminal and ㊴ (ECCS ground) with a voltmeter.

TERMINAL NO.	WIRE COLOR	ITEM	CONDITION	DATA (DC voltage)
19	W	Heated oxygen sensor	Engine is running. └ After warming up sufficiently and engine speed is 2,000 rpm.	0 - Approximately 1.0V (periodically change)

Heated Oxygen Sensor (HO2S) — LHD Models — (Cont'd)

EC-H02S-01

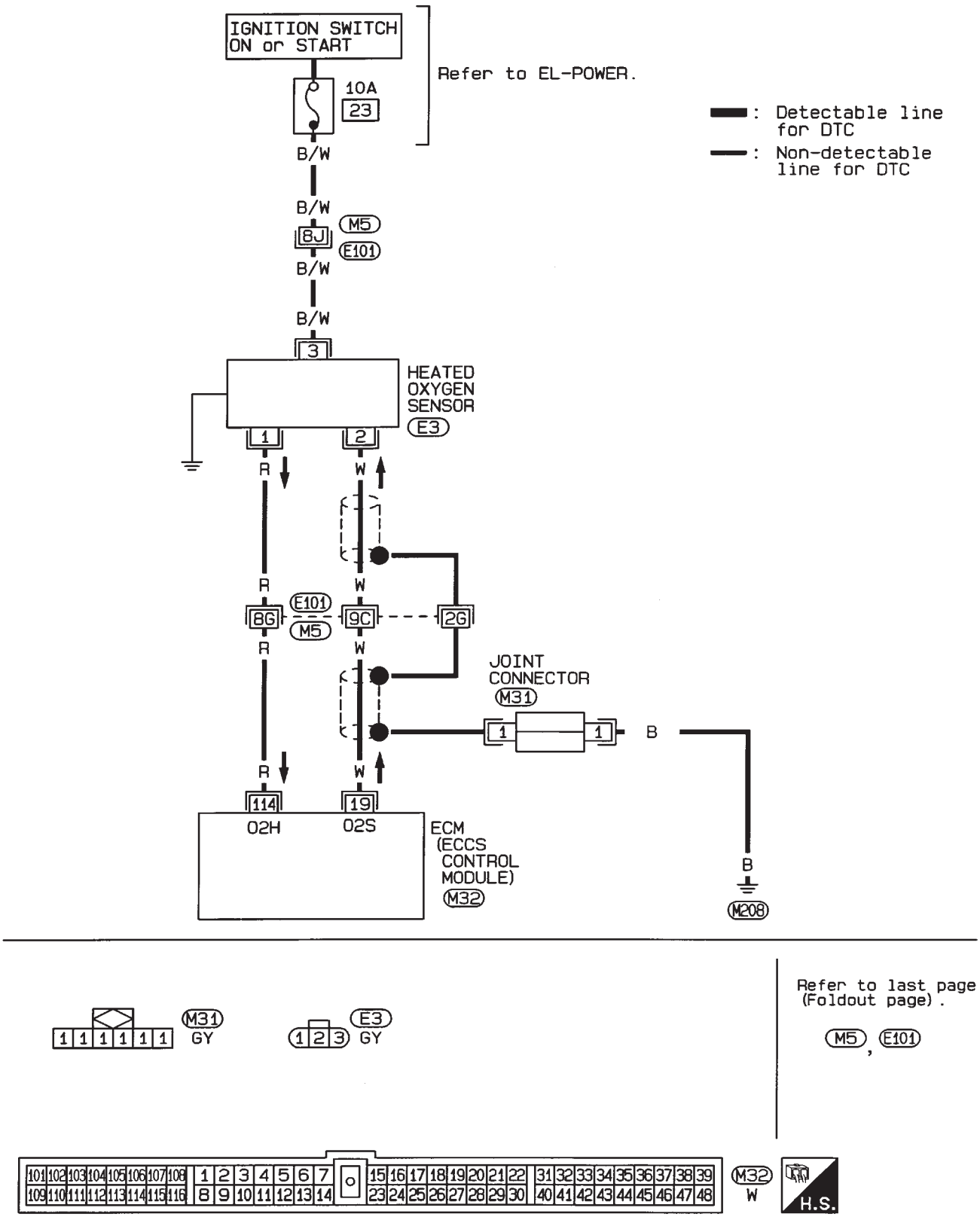

HEC359

Heated Oxygen Sensor (HO2S) — LHD Models — (Cont'd)

DIAGNOSTIC PROCEDURE

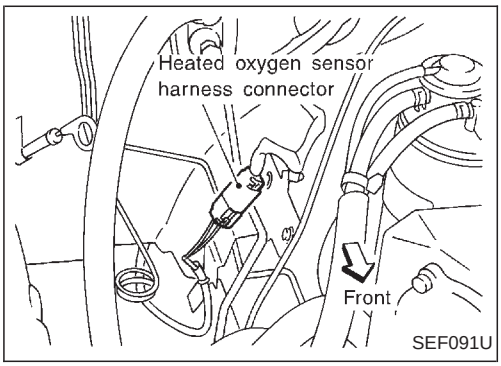

SEF091U

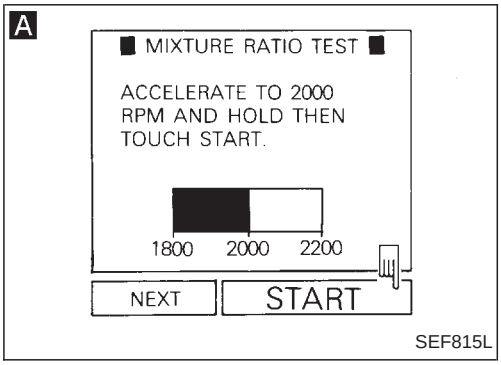

SEF815L

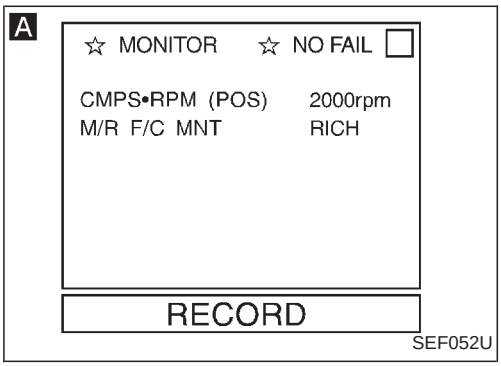

SEF052U

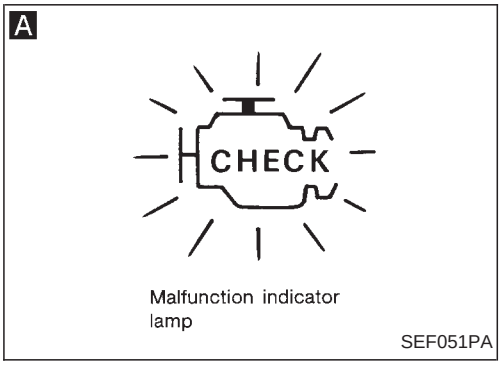

SEF051PA

INSPECTION START

A

CHECK HEATED OXYGEN SENSOR CIRCUIT.

1. Start engine and warm it up sufficiently.
2. Perform "MIXTURE RATIO TEST" in "FUNCTION TEST" mode with CONSULT.

OR

2. Make sure that "M/R F/C MNT" in "DATA MONITOR" mode indicates "RICH" and "LEAN" periodically more than 5 times during 10 seconds at 2,000 rpm.

OR

2. Stop engine and set ECM Diagnostic Test Mode II (Heated oxygen sensor monitor).
3. Restart engine and run it at about 2,000 rpm for about 2 minutes under no-load.
4. Keep engine speed at 2,000 rpm and make sure that the malfunction indicator lamp on the instrument panel comes on more than 5 times during each 10 seconds.

OK → INSPECTION END

NG → Ⓐ

Heated Oxygen Sensor (HO2S) — LHD Models — (Cont'd)

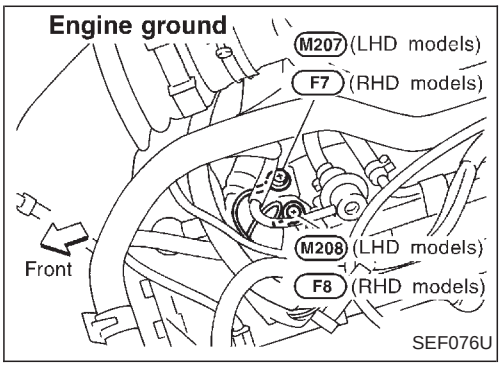

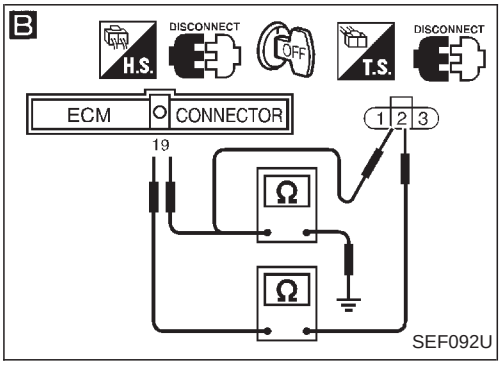

Ⓐ

CHECK SHIELD CIRCUIT.
1. Turn ignition switch "OFF".
2. Loosen and retighten engine ground screws.
3. Remove joint connector (M31).
4. Check the following.
   - Continuity between joint connector terminal ① and ground
   - Joint connector (Refer to "HARNESS LAYOUT" in EL section.)

   Continuity should exist.
   If OK, check harness for short to ground and short to power. Then reconnect joint connector.

NG → Repair open circuit, short to ground or short to power in harness or connectors.

OK ↓

B

CHECK INPUT SIGNAL CIRCUIT.
1. Turn ignition switch "OFF".
2. Disconnect heated oxygen sensor harness connector and ECM harness connector.
3. Check harness continuity between ECM terminal ⑲ and terminal ② .
   Continuity should exist.
4. Check harness continuity between ECM terminal ⑲ (or terminal ②) and ground.
   Continuity should not exist.
   If OK, check harness for short to ground and short to power.

NG → Repair open circuit, short to ground or short to power in harness or connectors.

OK ↓

Disconnect and reconnect harness connectors in the circuit. Then retest.

Trouble is not fixed. ↓

Check ECM pin terminals for damage and check the connection of ECM harness connector. Reconnect ECM harness connector and retest.

NG → Replace heated oxygen sensor.

OK ↓

INSPECTION END

Heated Oxygen Sensor Heater
— LHD Models —

SYSTEM DESCRIPTION

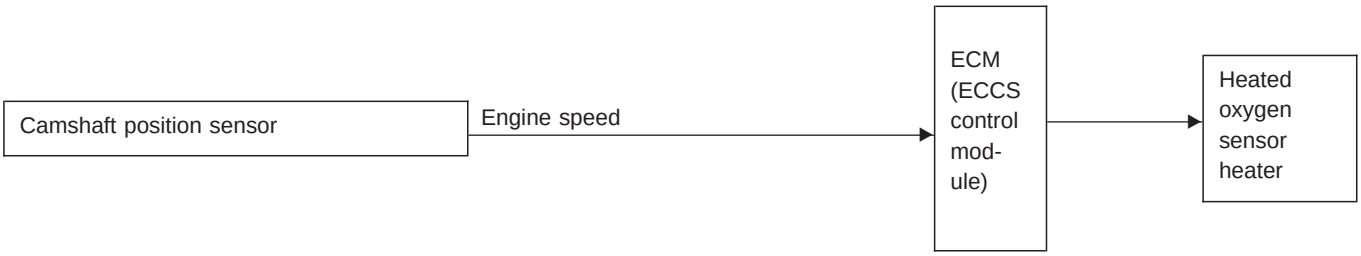

The ECM performs ON/OFF control of the heated oxygen sensor heater corresponding to the engine speed.

OPERATION

Engine speed rpm	Heated oxygen sensor heater
Above 3,200	OFF
Below 3,200	ON

ECM TERMINALS AND REFERENCE VALUE

Remarks: Specification data are reference values, and are measured between each terminal and ㊴ (ECCS ground) with a voltmeter.

TER-MINAL NO.	WIRE COLOR	ITEM	CONDITION	DATA (DC voltage)
114	R	Heated oxygen sensor heater	Engine is running. └ Engine speed is below 3,200 rpm.	Approximately 0V
			Engine is running. └ Engine speed is above 3,200 rpm.	BATTERY VOLTAGE (11 - 14V)

Heated Oxygen Sensor Heater — LHD Models — (Cont'd)

EC-H02S-01

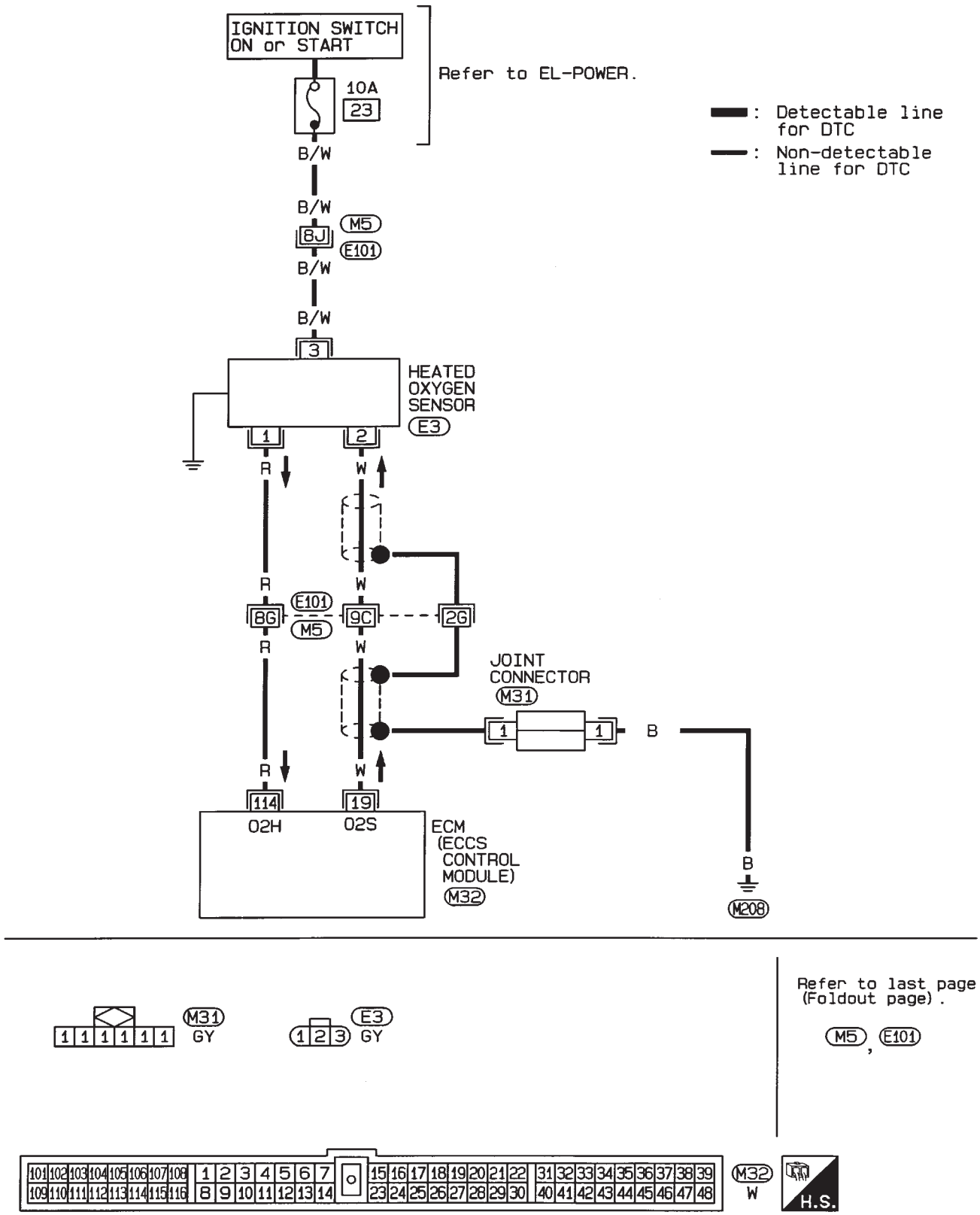

HEC359

Heated Oxygen Sensor Heater — LHD Models — (Cont'd)

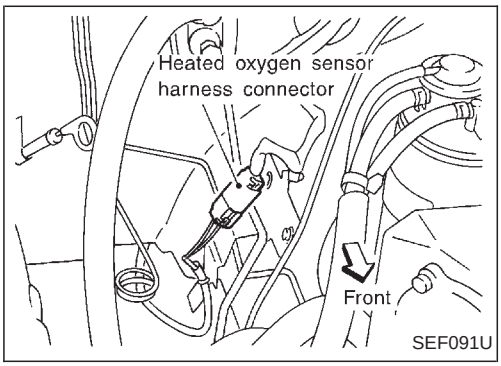

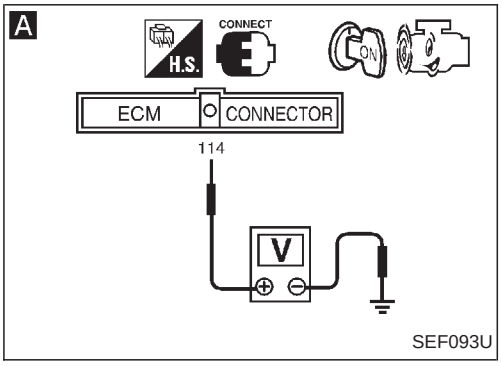

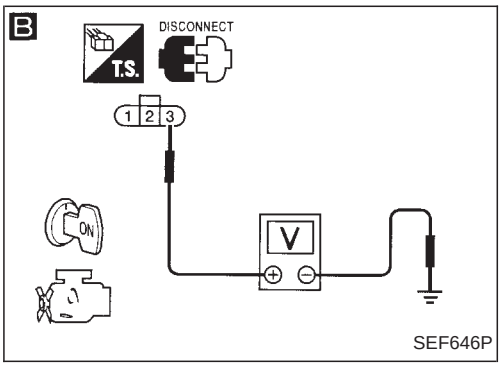

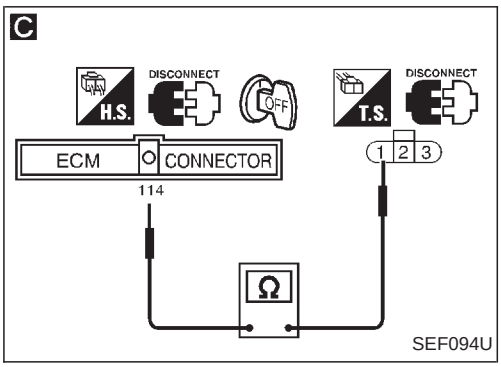

DIAGNOSTIC PROCEDURE

INSPECTION START

A

CHECK OVERALL FUNCTION.
1. Start engine.
2. Check voltage between ECM terminal (114) and ground with CONSULT or tester under the following conditions.

Voltage:
Engine speed is below 3,200 rpm
Approximately 0V
Engine speed is above 3,200 rpm
Battery voltage

OK → INSPECTION END

NG ↓

B

CHECK POWER SUPPLY.
1. Turn ignition switch "OFF".
2. Disconnect heated oxygen sensor harness connector.
3. Turn ignition switch "ON".
4. Check voltage between terminal ③ and ground with CONSULT or tester.

Voltage: Battery voltage

NG → Check the following.
- Harness connectors (E101), (M5)
- 10A fuse
- Harness for open or short between heated oxygen sensor and fuse

If NG, repair harness or connectors.

OK ↓

C

CHECK GROUND CIRCUIT.
1. Turn ignition switch "OFF".
2. Disconnect ECM harness connector.
3. Check harness continuity between terminal ① and ECM terminal (114).

Continuity should exist.
If OK, check harness for short to ground and short to power.

NG → Check the following.
- Harness connectors (M5), (E101)
- Harness for open or short between heated oxygen sensor and ECM

If NG, repair open circuit, short to ground or short to power in harness or connectors.

OK ↓

CHECK COMPONENT
(Heated oxygen sensor heater).
Refer to "COMPONENT INSPECTION" on next page.

NG → Replace heated oxygen sensor.

OK ↓

Disconnect and reconnect harness connectors in the circuit. Then retest.

Trouble is not fixed. ↓

Check ECM pin terminals for damage and check the connection of ECM harness connector. Reconnect ECM harness connector and retest.

INSPECTION END

Heated Oxygen Sensor Heater — LHD Models — (Cont'd)

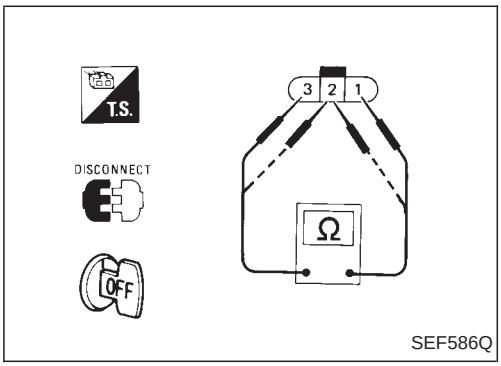

COMPONENT INSPECTION

Heated oxygen sensor heater

Check resistance between terminals ③ and ① .

Resistance: 2.3 - 4.3Ω at 25°C (77°F)

Check continuity between terminals ② and ① , ③ and ② .

Continuity should not exist.

If NG, replace the heated oxygen sensor.

CAUTION:

Discard any heated oxygen sensor which has been dropped from a height of more than 0.5 m (19.7 in) onto a hard surface such as a concrete floor; use a new one.

Idle Air Control Valve (IACV) — Auxiliary Air Control (AAC) Valve

SYSTEM DESCRIPTION

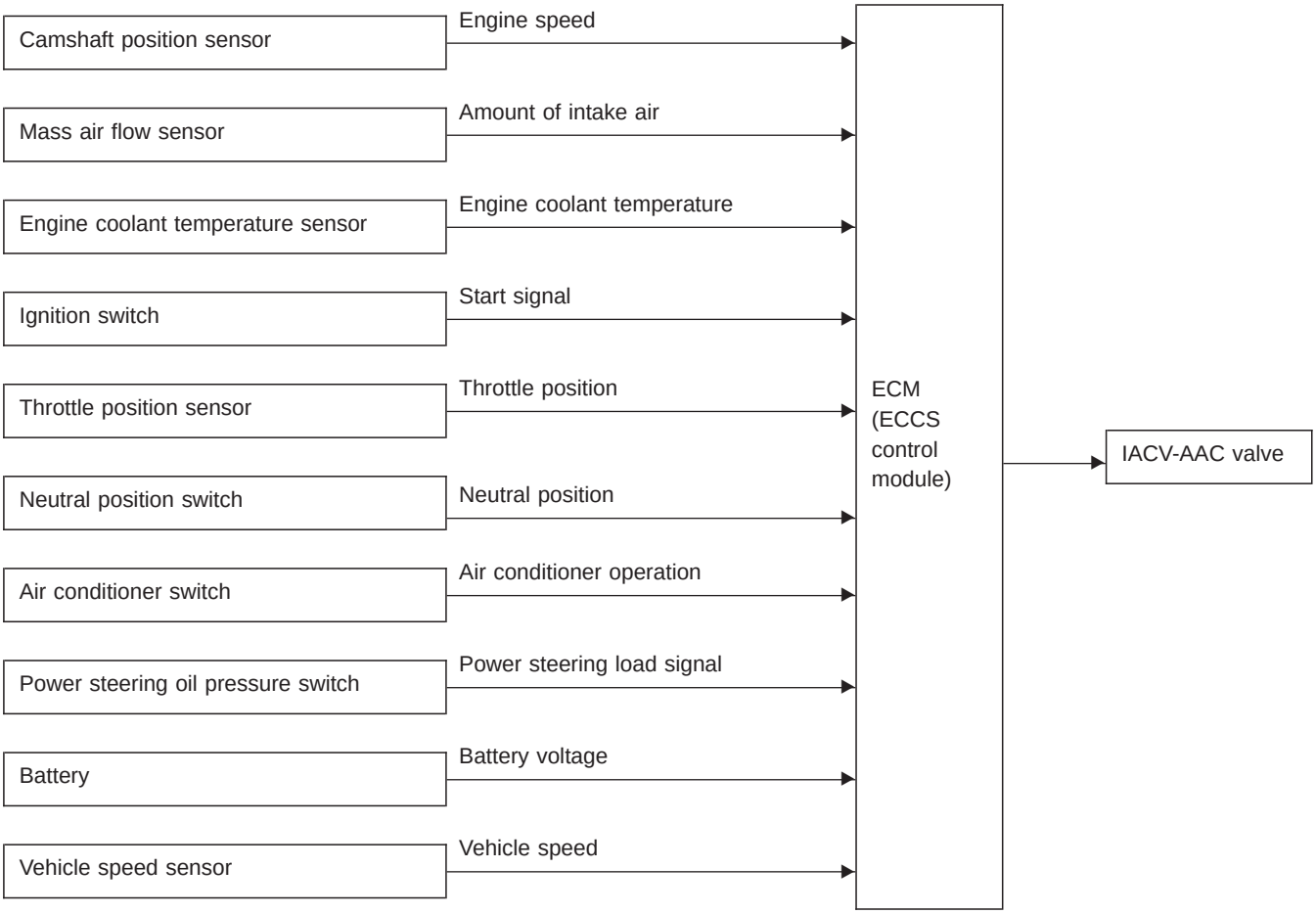

This system automatically controls engine idle speed to a specified level. Idle speed is controlled through fine adjustment of the amount of air which by-passes the throttle valve via IACV-AAC valve. The IACV-AAC valve repeats ON/OFF operation according to the signal sent from the ECM. The camshaft position sensor detects the actual engine speed and sends a signal to the ECM. The ECM then controls the ON/OFF time of the IACV-AAC valve so that engine speed coincides with the target value memorized in ECM. The target engine speed is the lowest speed at which the engine can operate steadily. The optimum value stored in the ECM is determined by taking into consideration various engine conditions, such as during warm up, deceleration, and engine load (air conditioner and power steering operation).

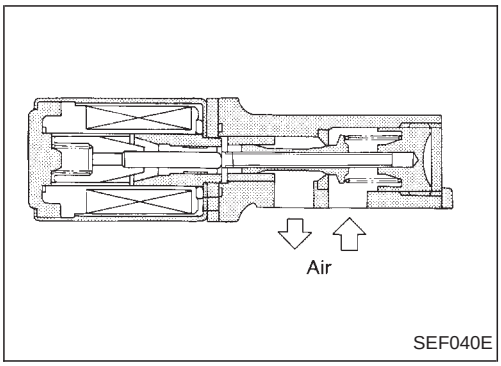

COMPONENT DESCRIPTION

IACV-ACC valve

The IACV-AAC valve is moved by ON/OFF pulses from the ECM. The longer the ON pulse, the greater the amount of air that will flow through the valve. The more air that flows through the valve, the higher the idle speed.

Idle Air Control Valve (IACV) — Auxiliary Air Control (AAC) Valve (Cont'd)

CONSULT REFERENCE VALUE IN DATA MONITOR MODE

Remarks: Specification data are reference values.

MONITOR ITEM	CONDITION		SPECIFICATION
IACV-AAC/V	• Engine: After warming up • Air conditioner switch: "OFF" • Shift lever: Neutral position • No-load	Idle	20 - 40%
		2,000 rpm	—

ECM TERMINALS AND REFERENCE VALUE

Remarks: Specification data are reference values, and are measured between each terminal and ㊴ (ECCS ground) with a voltmeter.

TER-MINAL NO.	WIRE COLOR	ITEM	CONDITION	DATA (DC voltage)
113	W/G	IACV-AAC valve	Engine is running. └ Idle speed	10 - 13V
			Engine is running. ├ Steering wheel is being turned. ├ Air conditioner is operating. ├ Rear window defogger switch is "ON". └ Lighting switch is "ON".	5 - 10V

Idle Air Control Valve (IACV) — Auxiliary Air Control (AAC) Valve (Cont'd)

EC-AAC/V-01

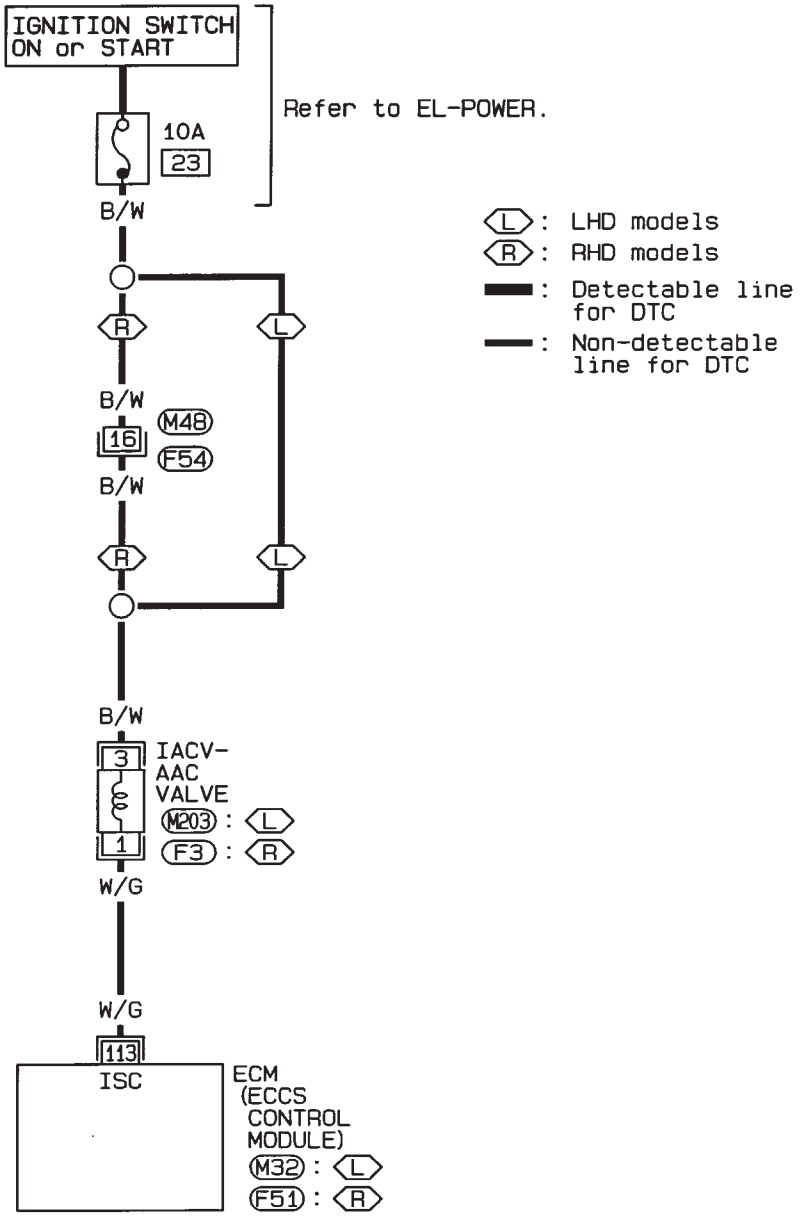

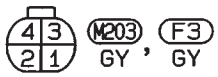

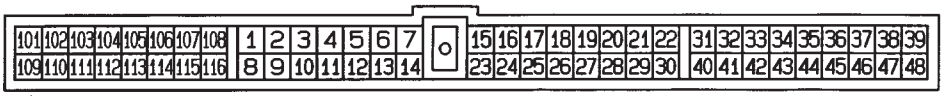

HEC355

Idle Air Control Valve (IACV) — Auxiliary Air Control (AAC) Valve (Cont'd)

DIAGNOSTIC PROCEDURE

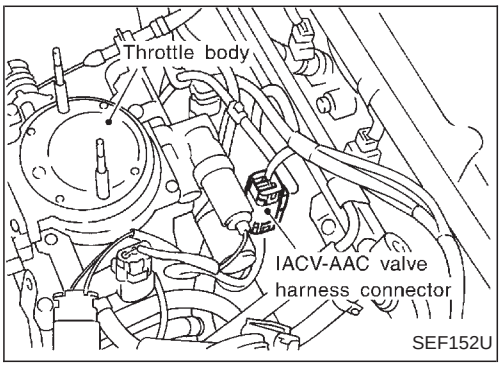

SEF152U

A

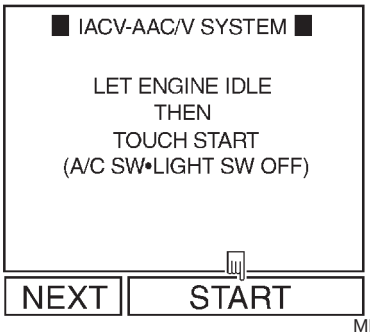

MEF176E

A

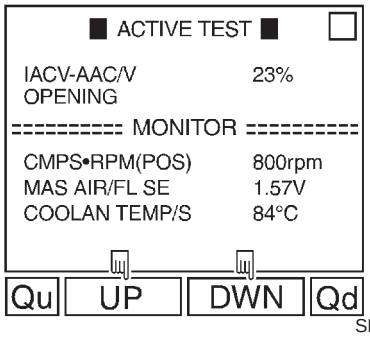

SEF164U

A

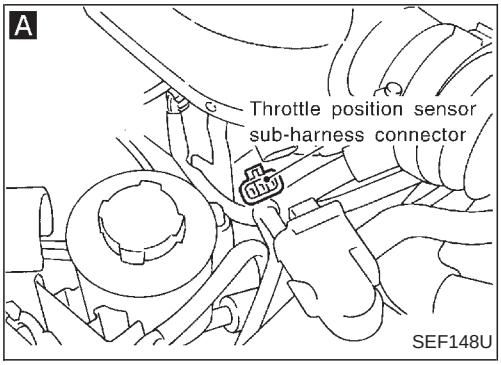

SEF148U

B

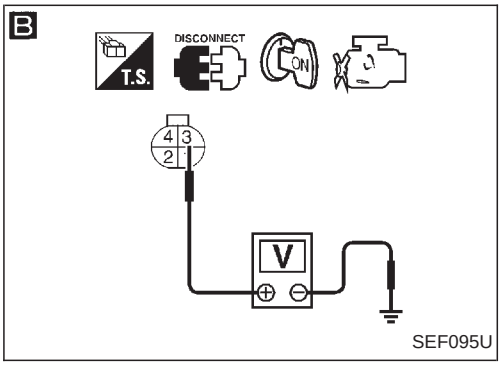

SEF095U

INSPECTION START

A

CHECK OVERALL FUNCTION.
1. Start engine and warm it up sufficiently.
2. Perform "IACV-AAC/V SYSTEM" in "FUNCTION TEST" mode with CONSULT.

OR

2. Perform "IACV-AAC/V OPENING" in "ACTIVE TEST" mode with CONSULT.
3. Check engine speed varies corresponding to IACV-AAC VALVE opening percent.

OR

2. Check idle speed.
   800±50 rpm
   If NG, adjust idle speed.
3. Stop engine and disconnect throttle position sensor sub-harness connector.
4. Restart engine and let it idle after revving it to 2,000 - 3,000 rpm a few times.
5. Check idle speed again.
   750±25 rpm

OK → INSPECTION END

NG ↓

B

CHECK POWER SUPPLY.
1. Stop engine.
2. Disconnect IACV-AAC valve harness connector.
3. Turn ignition switch "ON".
4. Check voltage between terminal ③ and ground with CONSULT or tester.
   Voltage: Battery voltage

NG → Check the following.
- 10A fuse
- Harness connectors (F54), (M48) (RHD models)
- Harness for open or short between IACV-AAC valve and fuse

If NG, repair harness or connectors.

OK ↓

Ⓐ

Idle Air Control Valve (IACV) — Auxiliary Air Control (AAC) Valve (Cont'd)

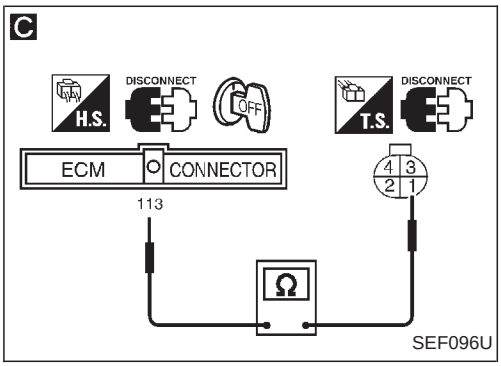

Ⓐ

C

CHECK OUTPUT SIGNAL CIRCUIT.
1. Turn ignition switch "OFF".
2. Disconnect ECM harness connector.
3. Check harness continuity between ECM terminal (113) and terminal ①.
   Continuity should exist.
   If OK, check harness for short to ground and short to power.

NG → Repair open circuit, short to ground or short to power in harness or connectors.

OK ↓

CHECK COMPONENT (IACV-AAC valve).
Refer to "COMPONENT INSPECTION" below.

NG → Replace IACV-AAC valve.

OK ↓

Disconnect and reconnect harness connectors in the circuit. Then retest.

Trouble is not fixed. ↓

Check ECM pin terminals for damage and check the connection of ECM harness connector. Reconnect ECM harness connector and retest.

↓

INSPECTION END

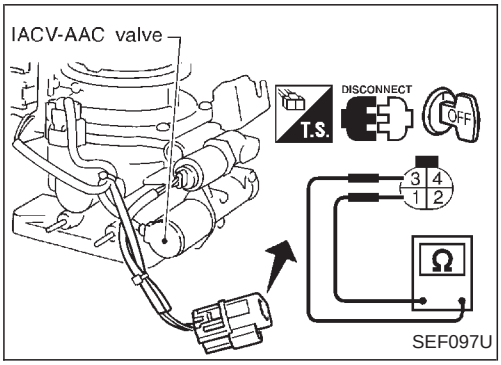

COMPONENT INSPECTION

IACV-AAC valve

Disconnect IACV-AAC valve harness connector.

- Check IACV-AAC valve resistance.
  Resistance:
  Approximately 10Ω at 25°C (77°F)
- Check plunger for seizing or sticking.
- Check for broken spring.

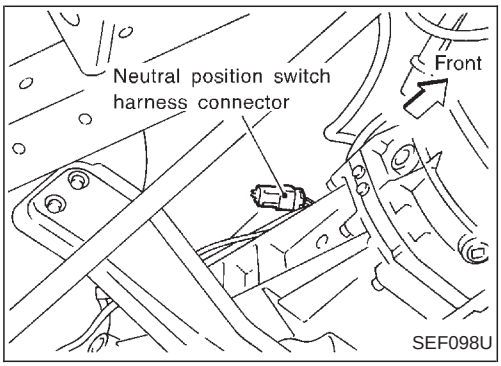

Neutral Position Switch

COMPONENT DESCRIPTION

When the gear position is in “Neutral”, neutral position is “ON”. ECM detects the position because the continuity of the line (the “ON” signal) exists.

CONSULT REFERENCE VALUE IN DATA MONITOR MODE

Remarks: Specification data are reference values.

MONITOR ITEM	CONDITION		SPECIFICATION
P/N POSI SW	● Ignition switch: ON	Shift lever: Neutral position	ON
		Except above	OFF

ECM TERMINALS AND REFERENCE VALUE

Remarks: Specification data are reference values, and are measured between each terminal and ㊴ (ECCS ground) with a voltmeter.

TER-MINAL NO.	WIRE COLOR	ITEM	CONDITION	DATA (DC voltage)
35	L/B	Neutral position	Ignition switch “ON” └ Neutral position	Approximately 0V
			Ignition switch “ON” └ Except the above gear position	Approximately 5V

Neutral Position Switch (Cont'd)

EC-PNP/SW-01

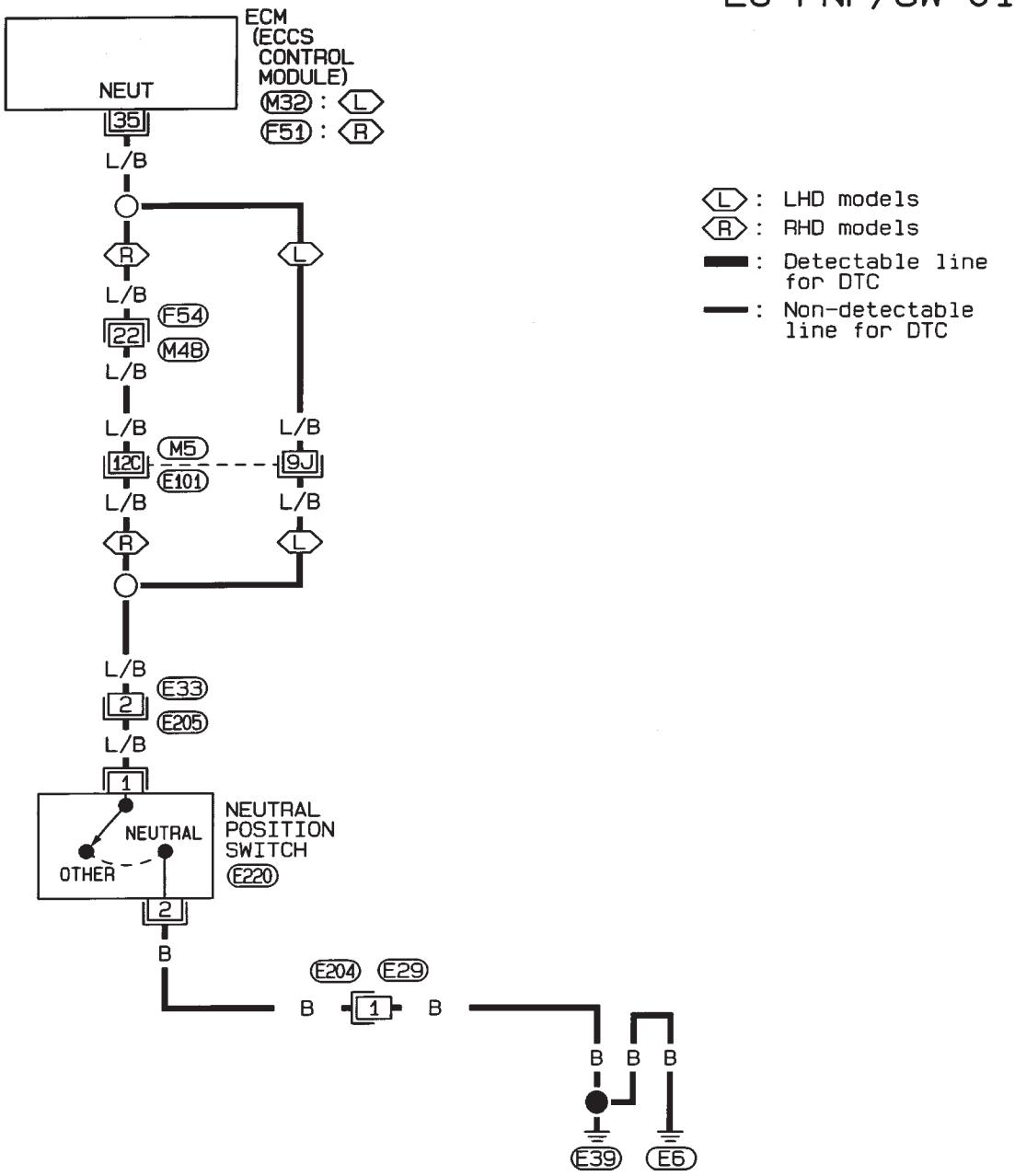

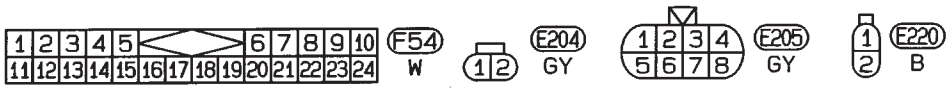

Refer to last page (Foldout page).

M5, E101

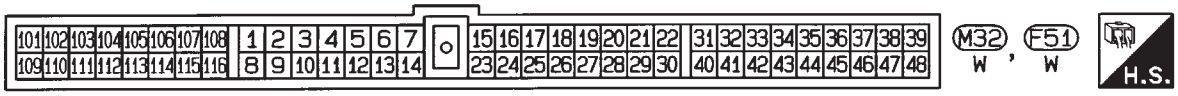

HEC357

Neutral Position Switch (Cont'd)

DIAGNOSTIC PROCEDURE

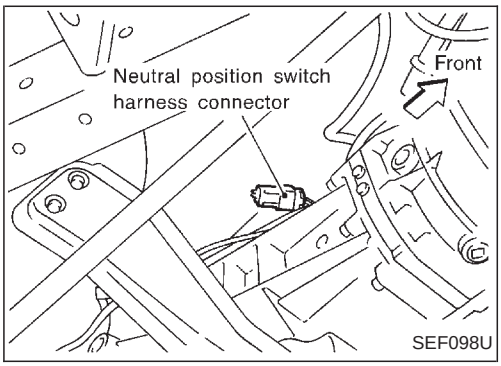

SEF098U

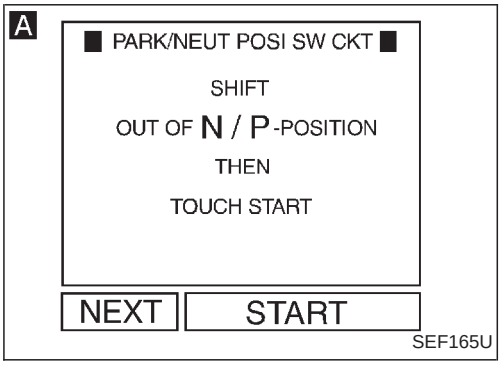

SEF165U

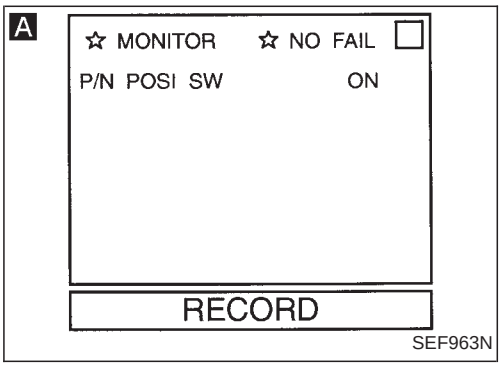

SEF963N

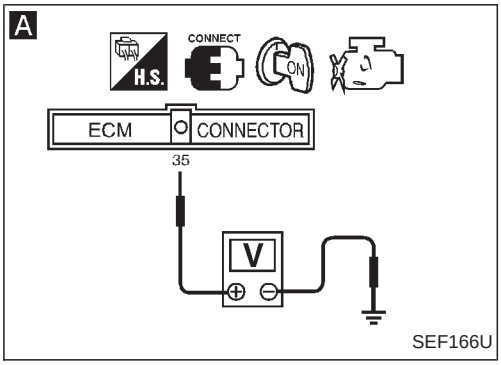

SEF166U

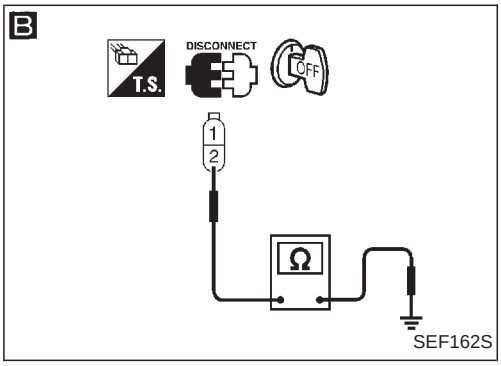

SEF162S

INSPECTION START

A

CHECK OVERALL FUNCTION.

1. Turn ignition switch "ON".
2. Perform "PARK/NEUT POSI SW CKT" in "FUNCTION TEST" mode with CONSULT.

OR

2. Select "P/N POSI SW" in "DATA MONITOR" mode with CONSULT.
3. Check the "P/N POSI SW" signal under the following conditions.
   Neutral position: ON
   Except above position: OFF

OR

2. Check voltage between ECM terminal 35 and ground with CONSULT or tester under the following conditions.
   Voltage:
   Neutral position
   Approximately 0V
   Except above position
   Approximately 5V

OK → INSPECTION END

NG ↓

B

CHECK GROUND CIRCUIT.

1. Disconnect neutral position switch harness connector.
2. Check harness continuity between terminal ② and body ground.
   Continuity should exist.
   If OK, check harness for short to ground and short to power.

NG → Check the following.
- Harness connectors E204, E29
- Harness for open or short between neutral position switch and body ground

If NG, repair open circuit, short to ground or short to power in harness or connectors.

OK ↓ Ⓐ

Neutral Position Switch (Cont'd)

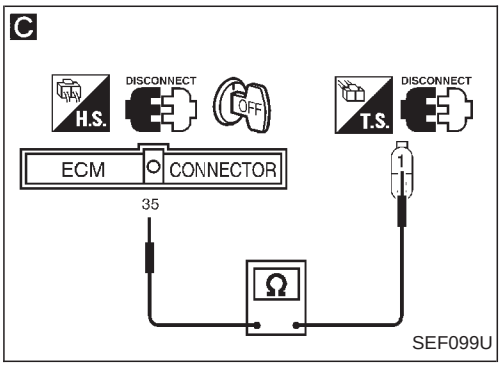

Ⓐ

C

CHECK INPUT SIGNAL CIRCUIT.
1. Disconnect ECM harness connector.
2. Check harness continuity between ECM terminal ㉟ and terminal ①.
   Continuity should exist.
   If OK, check harness for short to ground and short to power.

NG →
Check the following.
- Harness connectors (E205), (E33)
- Harness connectors (E101), (M5)
- Harness connectors (M48), (F54) (RHD models)
- Harness for open or short between ECM and neutral position switch

If NG, repair open circuit, short to ground or short to power in harness or connectors.

OK ↓

CHECK COMPONENT
(Neutral position switch).
Refer to MT section.

NG → Replace neutral position switch.

OK ↓

Disconnect and reconnect harness connectors in the circuit. Then retest.

Trouble is not fixed. ↓

Check ECM pin terminals for damage and check the connection of ECM harness connector. Reconnect ECM harness connector and retest.

↓

INSPECTION END

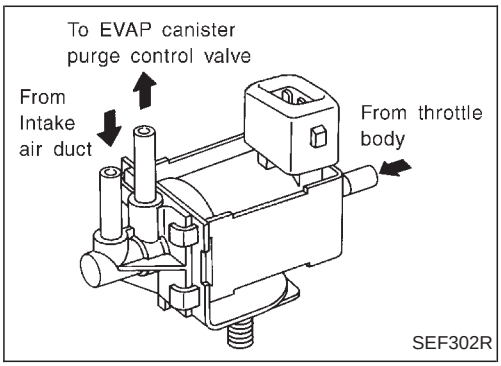

EVAP Canister Purge Control Solenoid Valve

COMPONENT DESCRIPTION

EVAP canister purge control solenoid valve

The EVAP canister purge control solenoid valve responds to signals from the ECM. When the ECM sends an OFF signal, the vacuum signal (from the throttle body to the EVAP canister purge control valve) passes through the EVAP canister purge control solenoid valve. The signal then reaches the EVAP canister purge control valve.
When the ECM sends an ON (ground) signal, the vacuum signal is cut.

CONSULT REFERENCE VALUE IN DATA MONITOR MODE

Remarks: Specification data are reference values.

MONITOR ITEM	CONDITION		SPECIFICATION
EGRC SOL/V	● Engine: After warning up ● Air conditioner switch: “OFF” ● Shift lever: Neutral position ● No-load	Idle	OFF
		Above 3,800 rpm	ON

ECM TERMINALS AND REFERENCE VALUE

Remarks: Specification data are reference values, and are measured between each terminal and ㊴ (ECCS ground) with a voltmeter.

TERMINAL NO.	WIRE COLOR	ITEM	CONDITION	DATA (DC voltage)
105	W/L	EVAP canister purge control solenoid valve	Engine is running. (Warm-up condition) └ Idle speed	BATTERY VOLTAGE (11 - 14V)
			Engine is running. (Warm-up condition) └ Engine is above 3,800 rpm.	Approximately 1V

EVAP Canister Purge Control Solenoid Valve (Cont'd)

EC-PGC/V-01

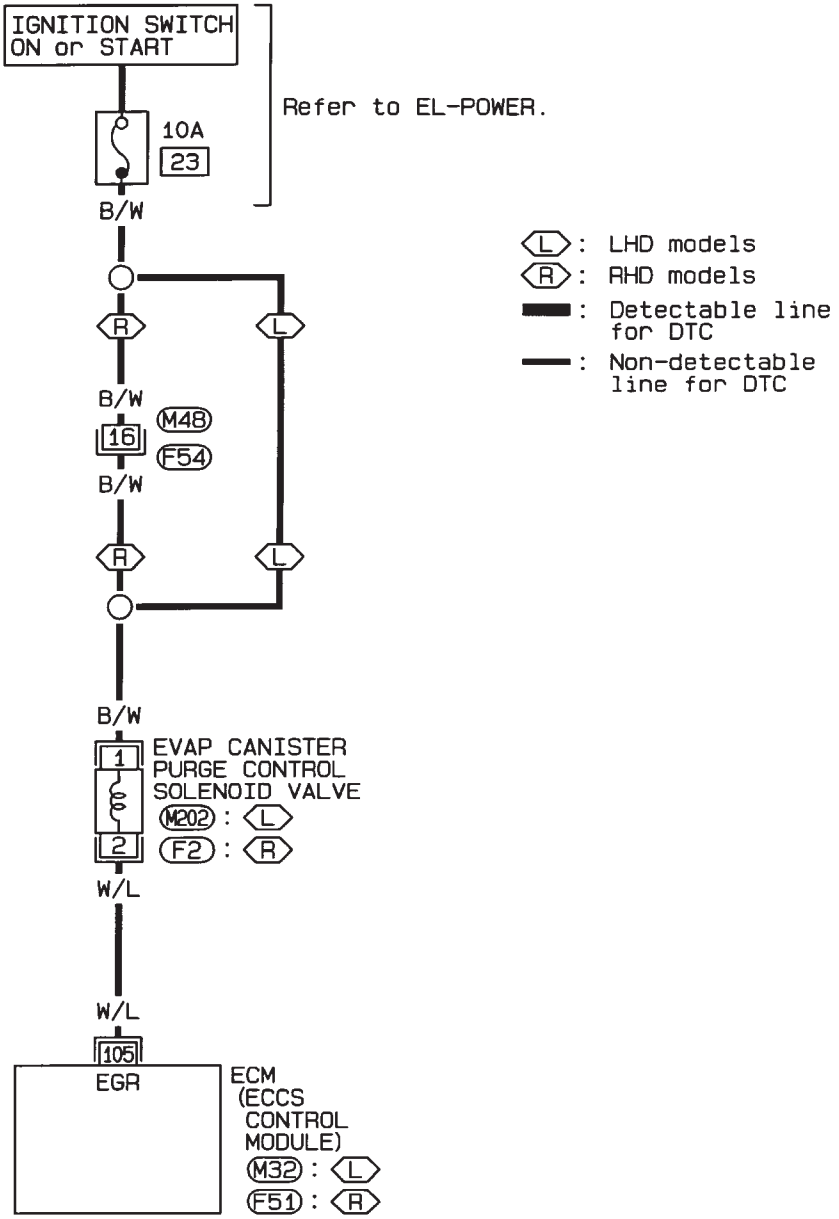

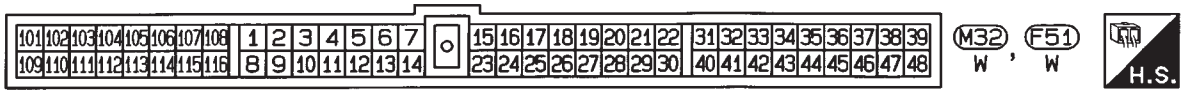

HEC358

EVAP Canister Purge Control Solenoid Valve (Cont'd)

DIAGNOSTIC PROCEDURE

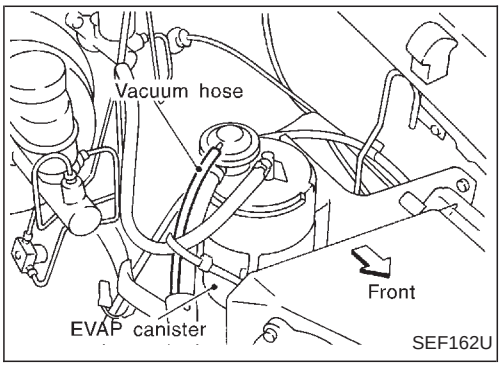

SEF162U

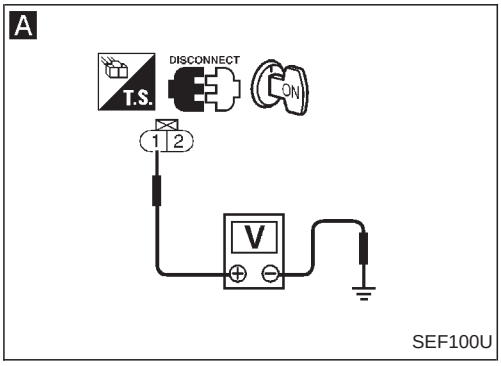

SEF100U

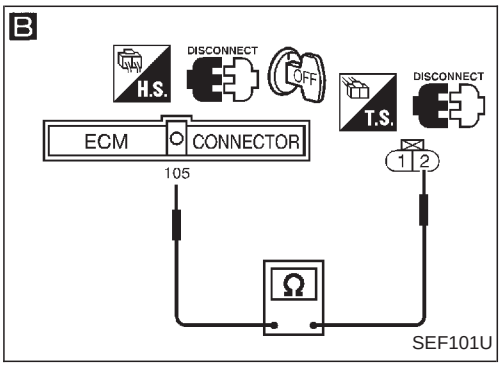

SEF101U

INSPECTION START

CHECK OVERALL FUNCTION.
1. Perform diagnostic test mode II (Self-diagnostic results).
   Make sure that diagnostic trouble code No. 55 is displayed.
2. Start engine and warm it up sufficiently.
3. Disconnect vacuum hose to EVAP canister.
4. Make sure that vacuum exists under the following conditions.
   Revving engine below 3,800 rpm:
   Vacuum should exist.
   Above 3,800 rpm:
   Vacuum should not exist.

OK → CHECK COMPONENT (EVAP canister).
Refer to "EVAP CANISTER", EC-20.
If NG, replace EVAP canister.
OK → INSPECTION END

NG ↓

CHECK SOLENOID VALVE OPERATION.
Does EVAP canister purge control solenoid valve make an operation sound in OVERALL FUNCTION CHECK above?

Yes → **CHECK VACUUM HOSE.**
Check vacuum hose for clogging, cracks and improper connection. Refer to "Vacuum Hose Drawing", EC-13.

No ↓

A

CHECK POWER SUPPLY.
1. Turn ignition switch "OFF".
2. Disconnect EVAP canister purge control solenoid valve harness connector.
3. Turn ignition switch "ON".
4. Check voltage between terminal ① and engine ground with CONSULT or tester.
   Voltage: Battery voltage

NG → Check the following.
- Harness connectors (F54), (M48) (RHD models)
- 10A fuse
- Harness for open or short between EVAP canister purge control solenoid valve and fuse

If NG, repair harness or connectors.

OK ↓

B

CHECK OUTPUT SIGNAL CIRCUIT.
1. Turn ignition switch "OFF".
2. Disconnect ECM harness connector.
3. Check harness continuity between ECM terminal (105) and terminal ②.
   Continuity should exist.
   If OK, check harness for short to ground and short to power.

NG → Repair open circuit, short to ground or short to power in harness or connectors.

OK ↓
Ⓐ

EVAP Canister Purge Control Solenoid Valve (Cont'd)

Ⓐ

CHECK COMPONENT.
(EVAP canister purge control solenoid valve).
Refer to "COMPONENT INSPECTION", below.

NG → Replace EVAP canister purge control solenoid valve.

OK ↓

Disconnect and reconnect harness connectors in the circuit. Then retest.

Trouble is not fixed. ↓

Check ECM pin terminals for damage and check the connection of ECM harness connector. Reconnect ECM harness connector and retest.

↓

INSPECTION END

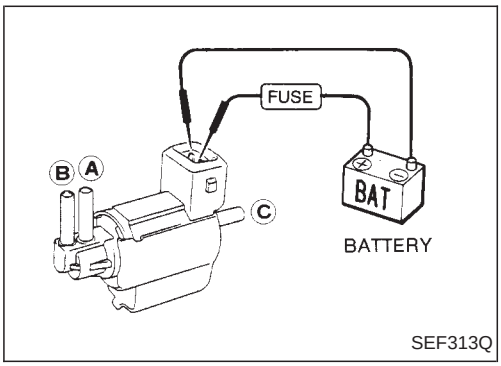

COMPONENT INSPECTION

EVAP canister purge control solenoid valve

Check air passage continuity.

Condition	Air passage continuity between Ⓐ and Ⓑ	Air passage continuity between Ⓐ and Ⓒ
12V direct current supply between terminals	Yes	No
No supply	No	Yes

If NG, replace solenoid valve.

Injector

LHD MODELS

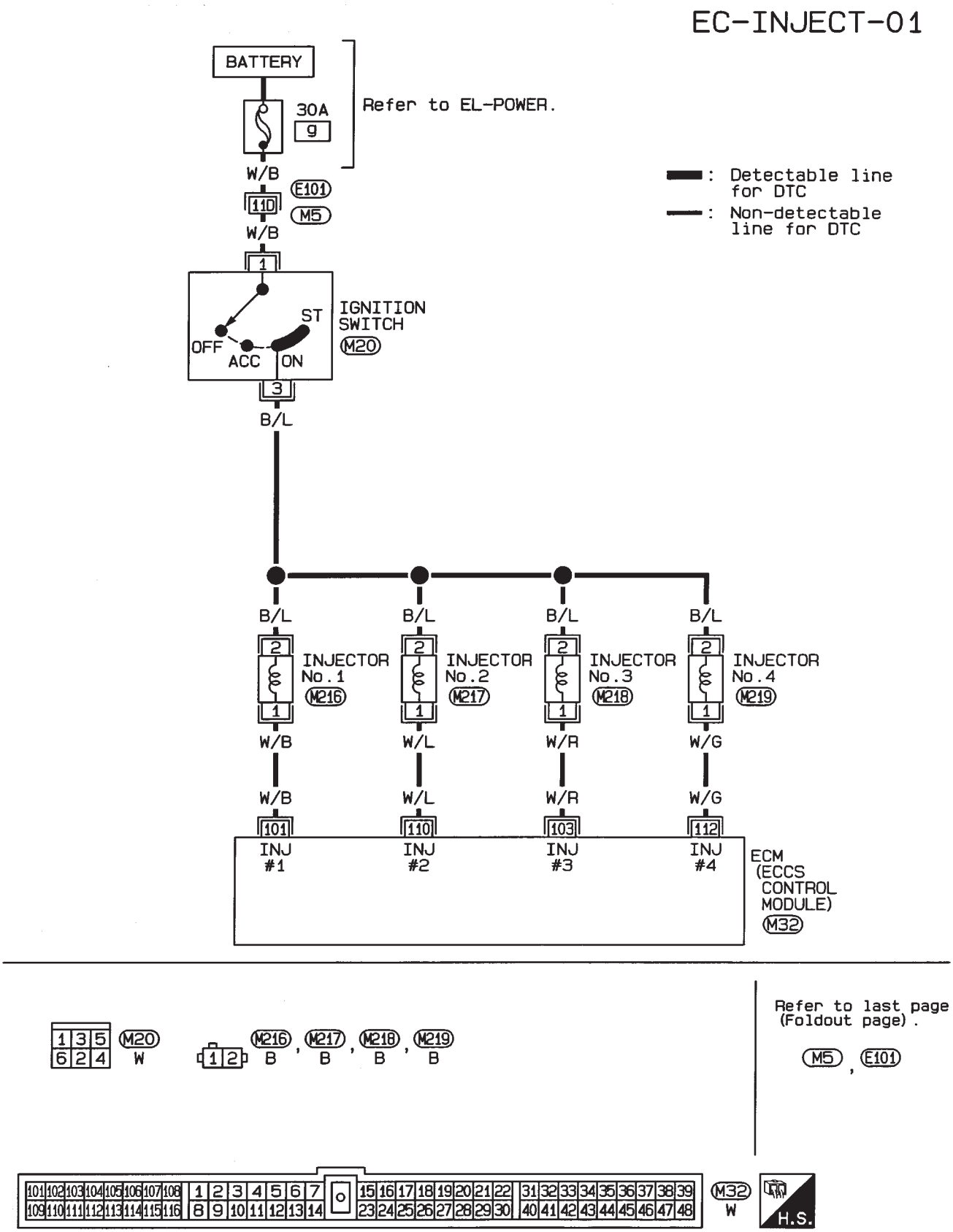

HEC351

Injector (Cont'd)

RHD MODELS

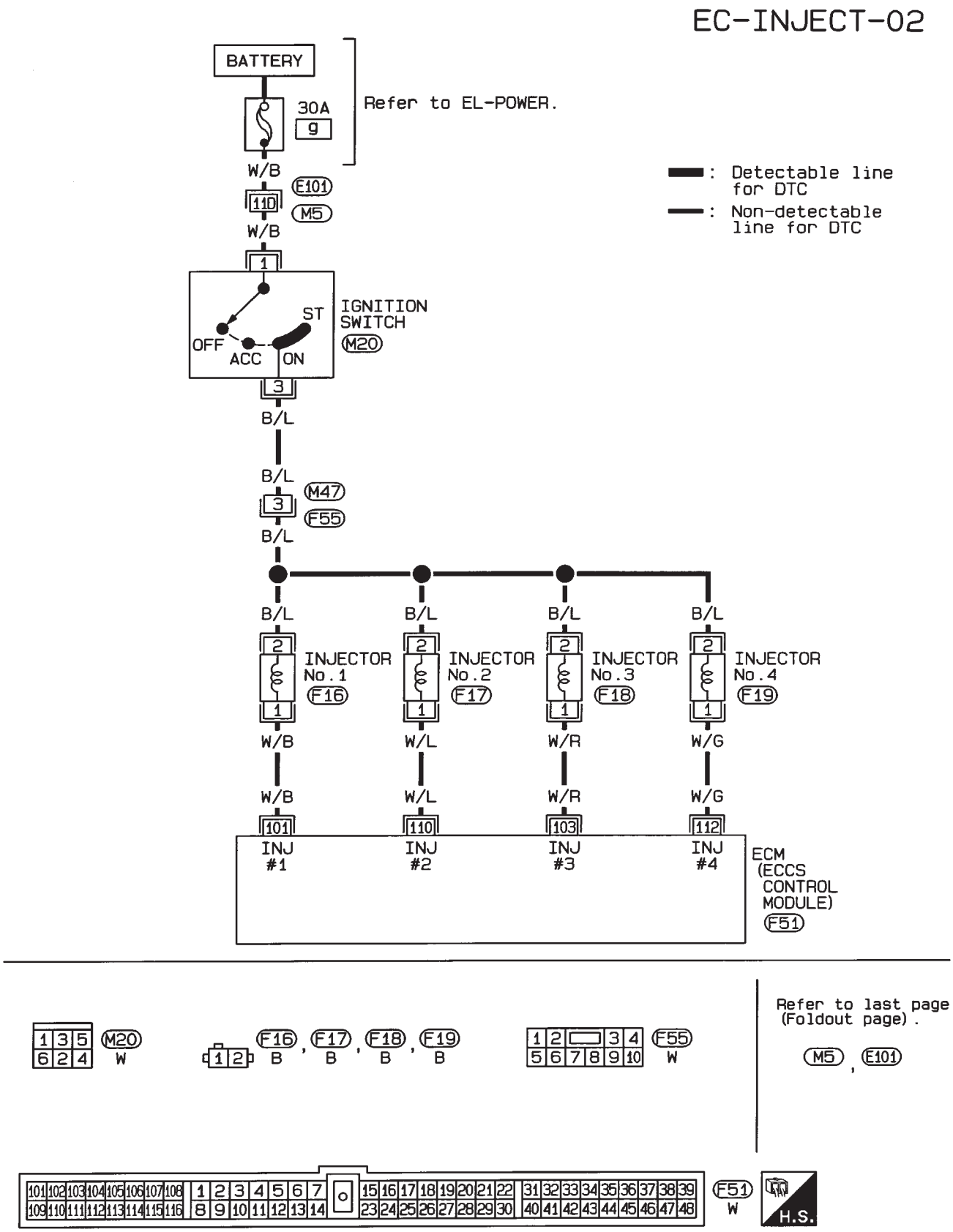

HEC352

Injector (Cont'd)

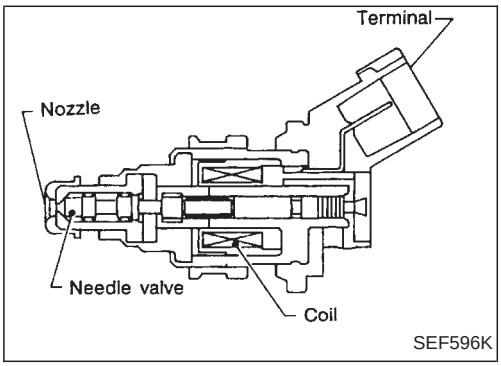

COMPONENT DESCRIPTION

The fuel injector is a small, precise solenoid valve. When the ECM supplies a ground to the injector circuit, the coil in the injector is energized. The energized coil pulls the needle valve back and allows fuel to flow through the injector into the intake manifold. The amount of fuel injected depends upon the injection pulse duration. Pulse duration is the length of time the injector remains open. The ECM controls the injection pulse duration based on engine fuel needs.

ECM TERMINALS AND REFERENCE VALUE

Remarks: Specification data are reference values, and are measured between each terminal and ㊴ (ECCS ground) with a voltmeter.

TERMINAL NO.	WIRE COLOR	ITEM	CONDITION	DATA (DC voltage)
101 103 110 112	W/B W/R W/L W/G	Injector No. 1 Injector No. 3 Injector No. 2 Injector No. 4	Engine is running. (Warm-up condition) └ Idle speed	BATTERY VOLTAGE (11 - 14V) 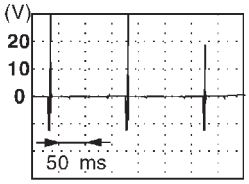 SEF069U
			Engine is running. └ Engine speed is 2,000 rpm.	BATTERY VOLTAGE (11 - 14V) 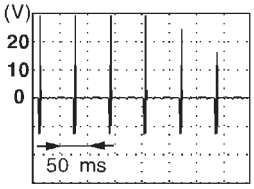 SEF070U

Injector (Cont'd)

DIAGNOSTIC PROCEDURE

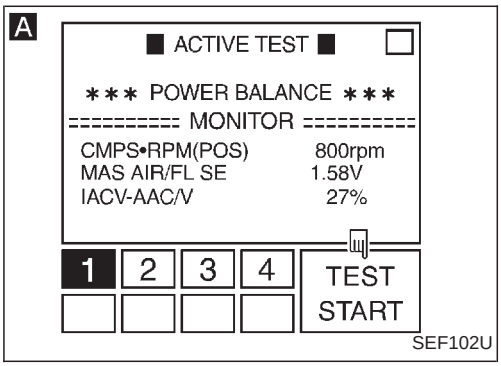

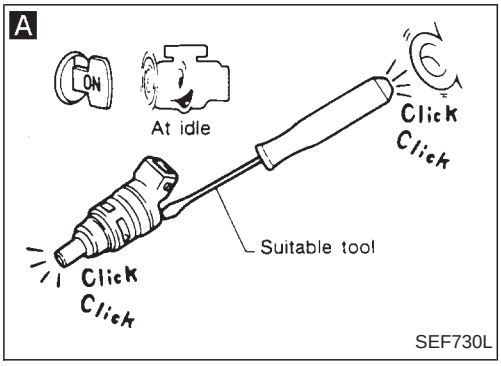

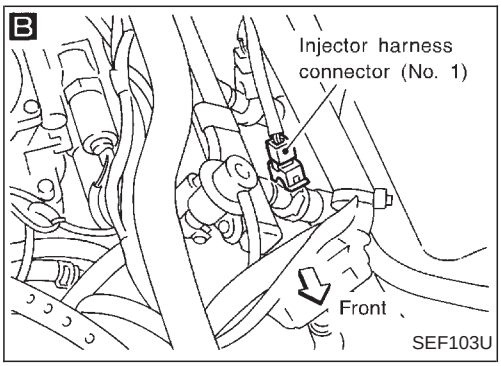

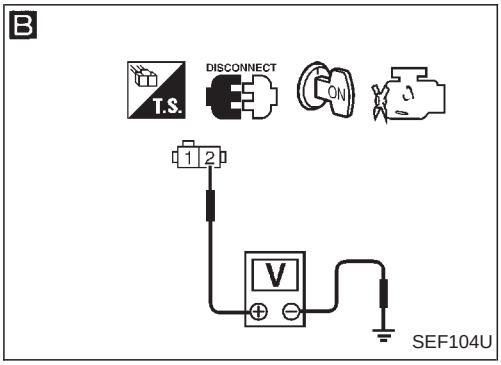

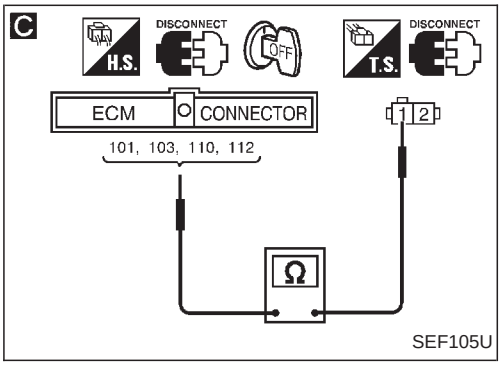

INSPECTION START

A

CHECK OVERALL FUNCTION.
1. Start engine.
2. Perform "POWER BALANCE" in "ACTIVE TEST" mode with CONSULT.
3. Make sure that each circuit produces a momentary engine speed drop.

OR

2. Listen to each injector operating sound.
Clicking noise should be heard.

OK → INSPECTION END

NG ↓

B

CHECK POWER SUPPLY.
1. Stop engine.
2. Disconnect injector harness connector.
3. Turn ignition switch "ON".
4. Check voltage between terminal ② and ground with CONSULT or tester.
Voltage: Battery voltage

NG → Check the following.
- Harness connectors (F55), (M47) (RHD models)
- Harness for open or short between injector and ignition switch

If NG, repair harness or connectors.

OK ↓

C

CHECK OUTPUT SIGNAL CIRCUIT.
1. Turn ignition switch "OFF".
2. Disconnect ECM harness connector.
3. Check harness continuity between terminal ① and ECM terminals (101), (103), (110), (112).
Continuity should exist.
If OK, check harness for short to ground and short to power.

NG → Repair open circuit, short to ground or short to power in harness or connectors.

OK ↓

CHECK COMPONENT (Injector).
Refer to "COMPONENT INSPECTION" on next page.

NG → Replace injector.

OK ↓

Disconnect and reconnect harness connectors in the circuit. Then retest.

Trouble is not fixed. ↓

Check ECM pin terminals for damage and check the connection of ECM harness connector. Reconnect ECM harness connector and retest.

↓

INSPECTION END

Injector (Cont'd)

COMPONENT INSPECTION

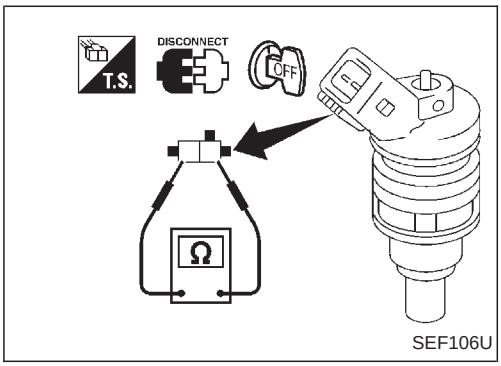

Injector

1. Disconnect injector harness connector.
2. Check resistance between terminals as shown in the figure.
   Resistance: 10 - 14Ω at 25°C (77°F)
   If NG, replace injector.

Start Signal

EC-S/SIG-01

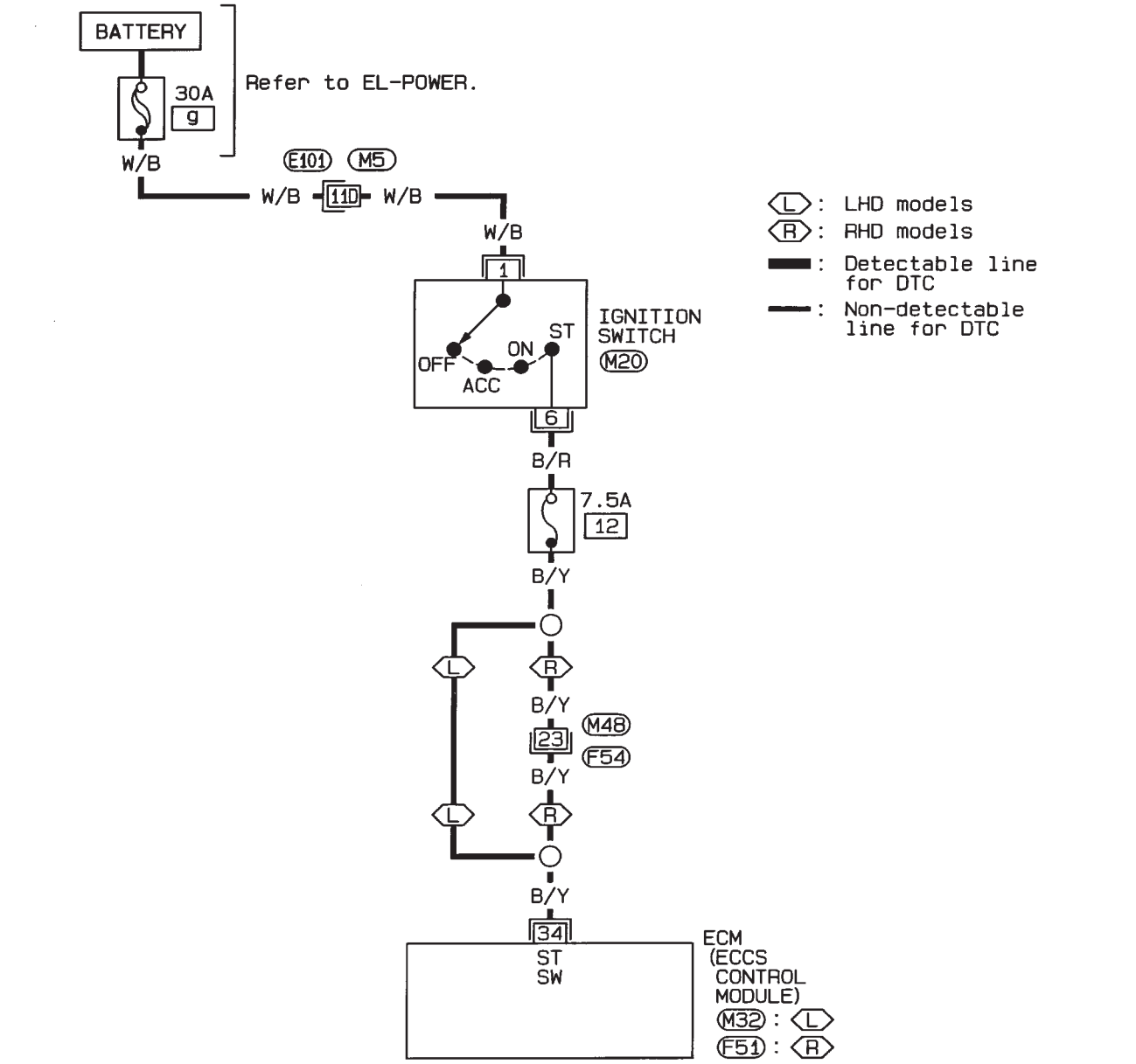

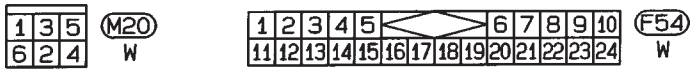

Refer to last page (Foldout page).

M5, E101

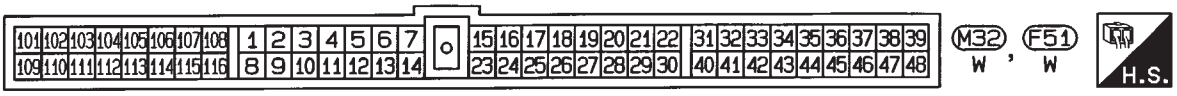

HEC350

Start Signal (Cont'd)

DIAGNOSTIC PROCEDURE

A

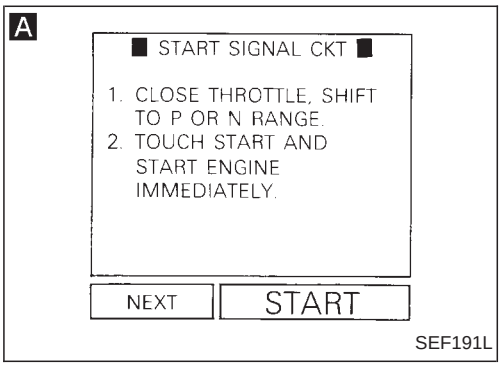

SEF191L

A

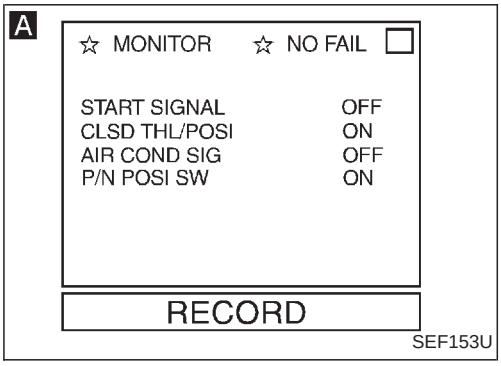

SEF153U

A

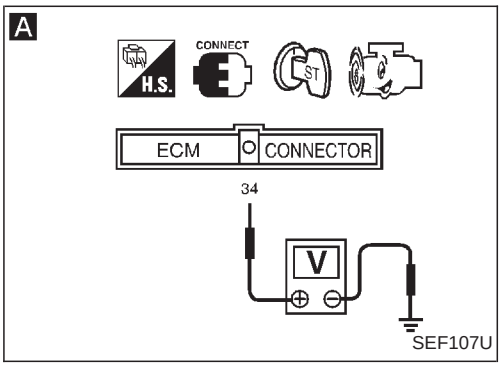

SEF107U

B

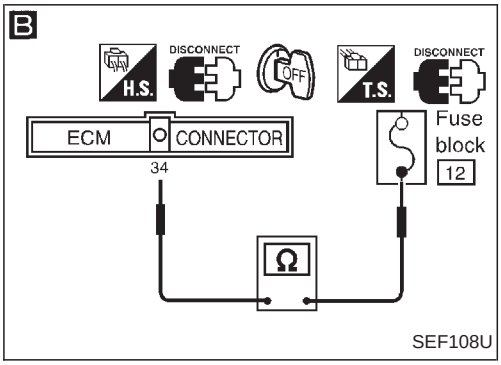

SEF108U

INSPECTION START

A

CHECK OVERALL FUNCTION.

1. Turn ignition switch "ON".
2. Perform "START SIGNAL CKT" in "FUNCTION TEST" mode with CONSULT.

OR

1. Turn ignition switch "ON".
2. Check "START SIGNAL" in "DATA MONITOR" mode with CONSULT.

IGN "ON"	OFF
IGN "START"	ON

OR

1. Turn ignition switch to "START".
2. Check voltage between ECM terminal ㉞ and ground.

Voltage:
Ignition switch "START"
Battery voltage
Except above
Approximately 0V

OK → INSPECTION END

NG ↓

Check if 7.5A fuse is OK.

NG → Replace 7.5A fuse.

OK ↓

B

CHECK INPUT SIGNAL CIRCUIT.

1. Turn ignition switch "OFF".
2. Disconnect ECM harness connector and 7.5A fuse.
3. Check harness continuity between ECM terminal ㉞ and fuse block.
   Continuity should exist.
   If OK, check harness for short to ground and short to power.

NG → Check the following.
- Harness connectors (F54), (M48) (RHD models)
- Harness for open or short between ECM and fuse block

If NG, repair open circuit, short to ground or short to power in harness or connectors.

OK ↓

Disconnect and reconnect harness connectors in the circuit. Then retest.

Trouble is not fixed. ↓

Check ECM pin terminals for damage and check the connection of ECM harness connector. Reconnect ECM harness connector and retest.

↓

INSPECTION END

Fuel Pump

SYSTEM DESCRIPTION

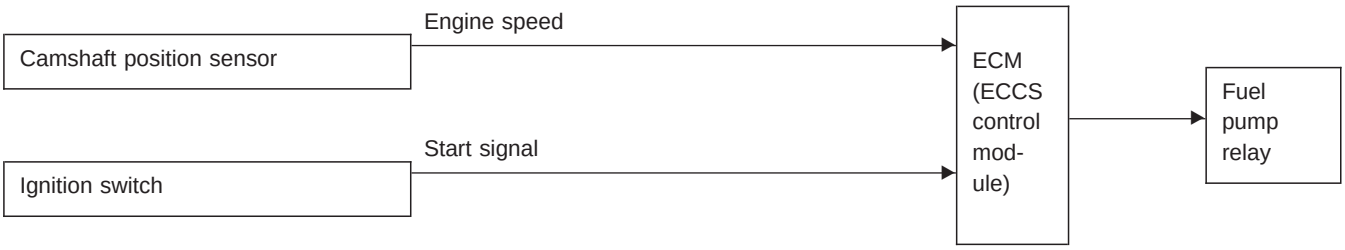

The ECM activates the fuel pump for several seconds after the ignition switch is turned on to improve engine startability. If the ECM receives a 180° signal from the camshaft position sensor, it knows that the engine is rotating, and causes the pump to operate. If the 180° signal is not received when the ignition switch is on, the engine stalls. The ECM stops pump operation and prevents battery discharging, thereby improving safety. The ECM does not directly drive the fuel pump. It controls the ON/OFF fuel pump relay, which in turn controls the fuel pump.

Condition	Fuel pump operation
Ignition switch is turned to ON.	Operates for 5 seconds.
Engine running and cranking	Operates.
When engine is stopped	Stops in 1 second.
Except as shown above.	Stops.

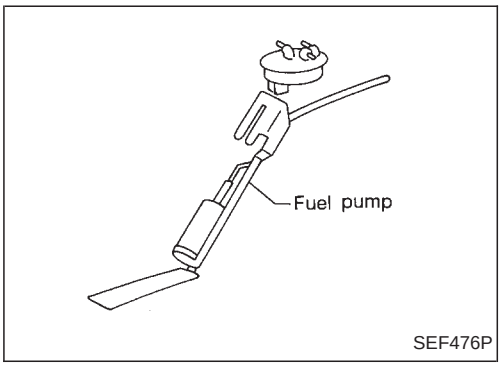

COMPONENT DESCRIPTION

The fuel pump with a fuel damper is an in-tank type (the pump and damper are located in the fuel tank).

CONSULT REFERENCE VALUE IN DATA MONITOR MODE

Remarks: Specification data are reference values.

MONITOR ITEM	CONDITION	SPECIFICATION
FUEL PUMP RLY	• Ignition switch is turned to ON (Operates for 5 seconds). • Engine running and cranking • When engine is stopped (Stops in 1 second)	ON
	Except as shown above	OFF

Fuel Pump (Cont'd)

ECM TERMINALS AND REFERENCE VALUE

Remarks: Specification data are reference values, and are measured between each terminal and ㊴ (ECCS ground) with a voltmeter.

TERMINAL NO.	WIRE COLOR	ITEM	CONDITION	DATA (DC voltage)
104	W/R	Fuel pump relay	Ignition switch "ON" └ For 5 seconds after turning ignition switch "ON" Engine is running.	Approximately 1V
			Ignition switch "ON" └ 5 seconds after turning ignition switch "ON"	BATTERY VOLTAGE (11 - 14V)

Fuel Pump (Cont'd)

LHD MODELS

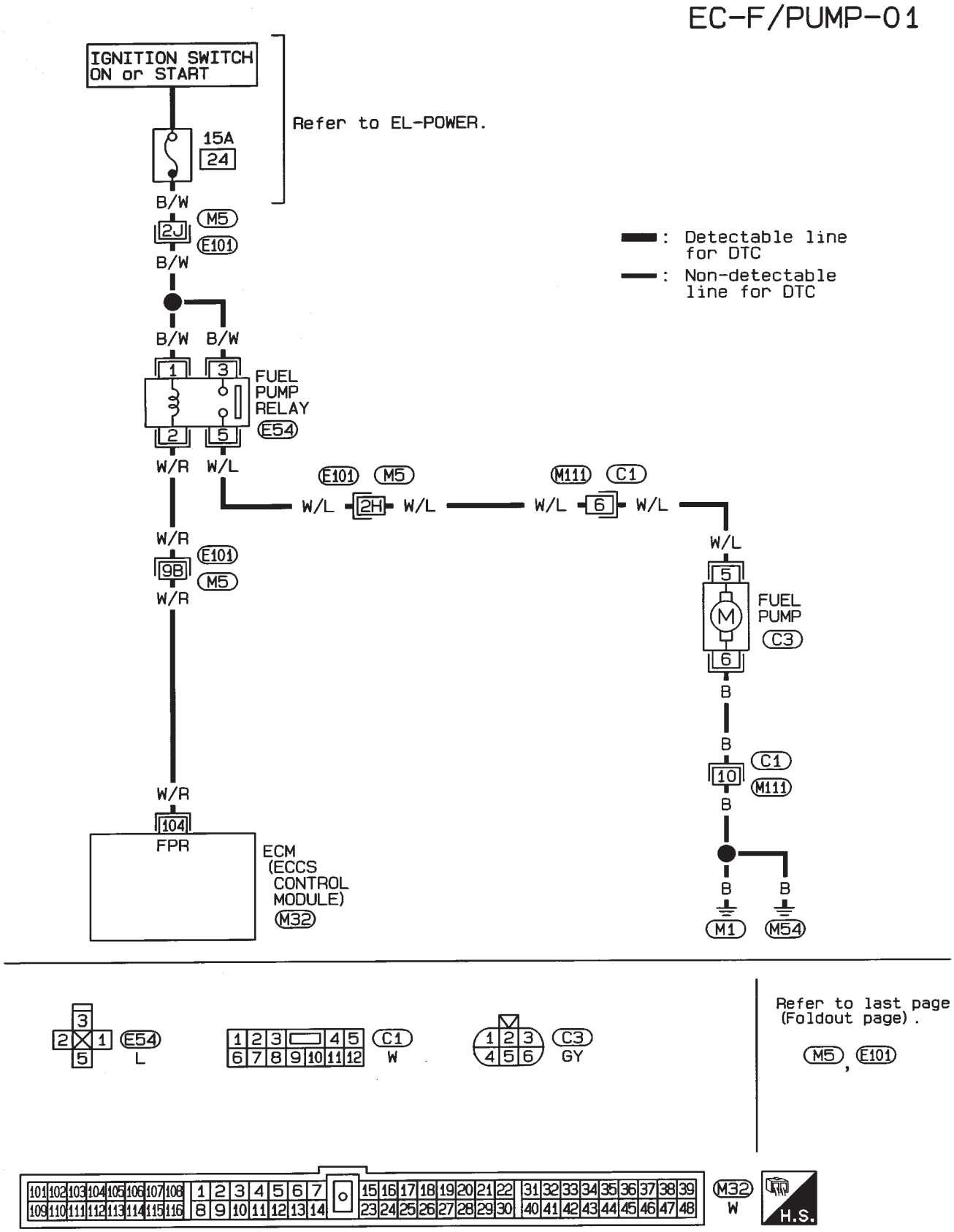

HEC353

Fuel Pump (Cont'd)

RHD MODELS

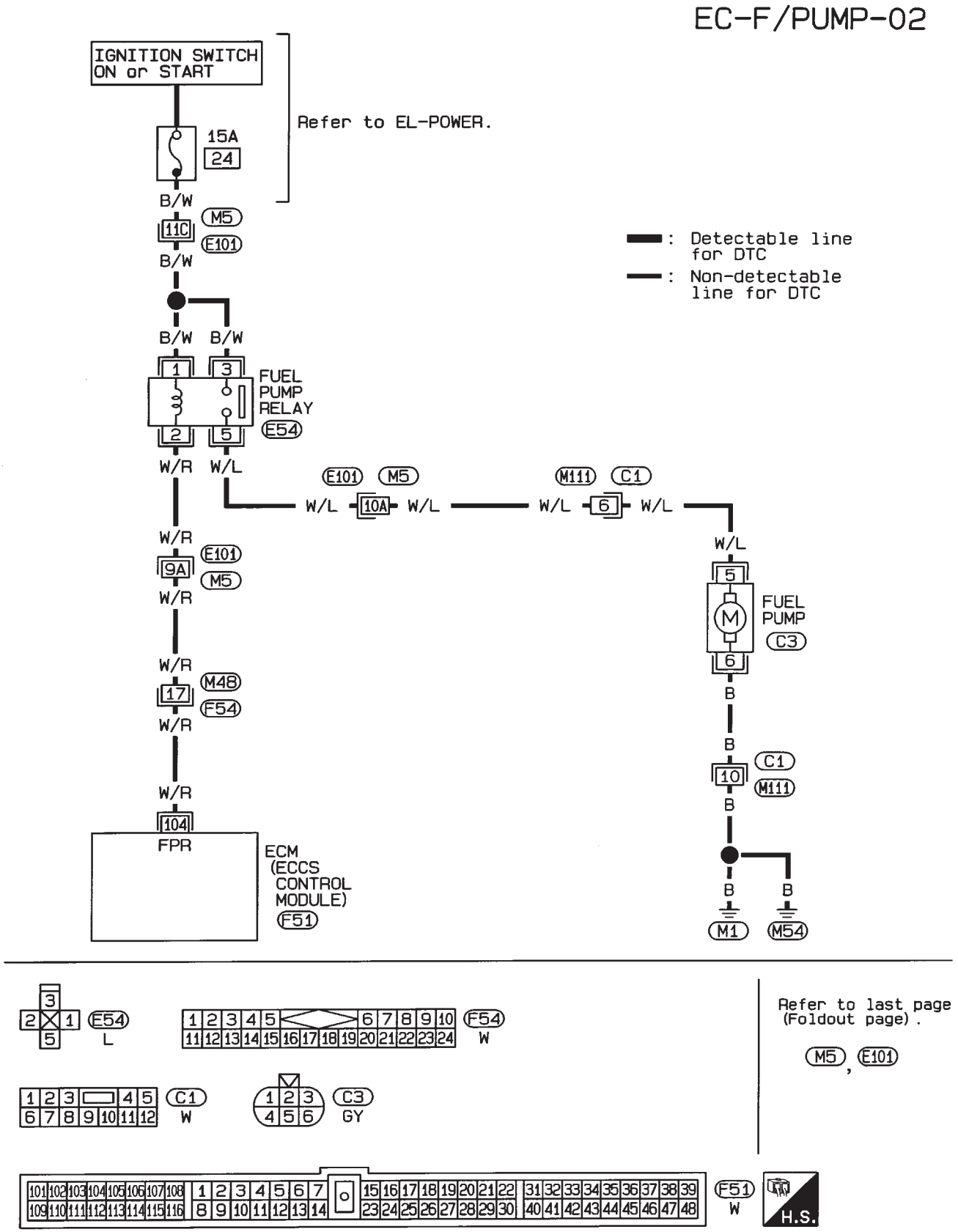

HEC354

Fuel Pump (Cont'd)

DIAGNOSTIC PROCEDURE

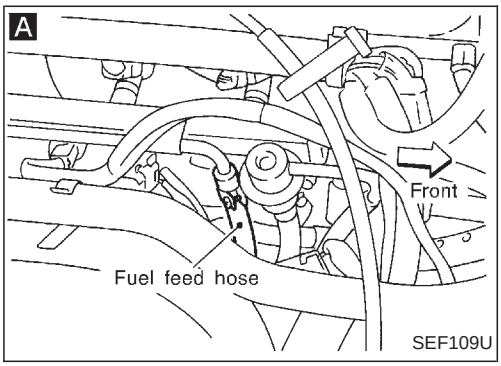

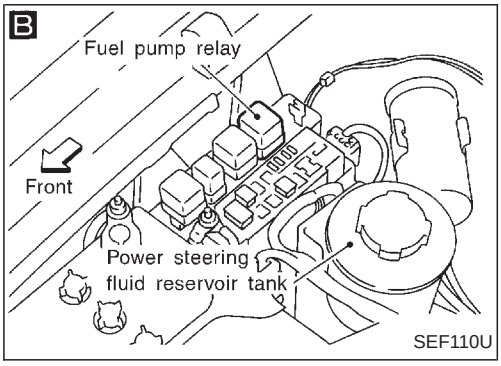

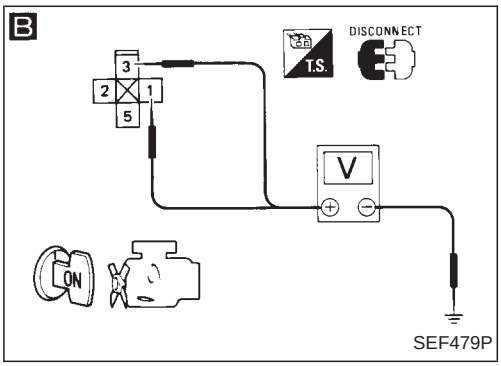

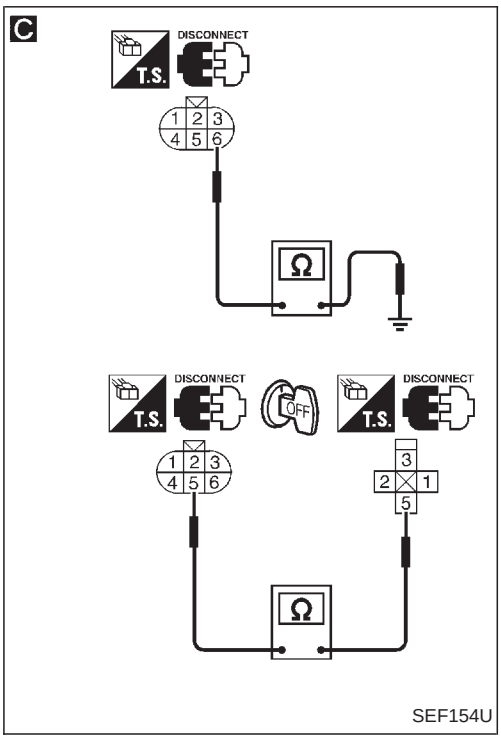

INSPECTION START

A

CHECK OVERALL FUNCTION.
1. Turn ignition switch "ON".
2. Pinch fuel feed hose with fingers.
   Fuel pressure pulsation should be felt on the fuel feed hose for 5 seconds after ignition switch is turned "ON".

OK → INSPECTION END

NG ↓

B

CHECK POWER SUPPLY.
1. Turn ignition switch "OFF".
2. Disconnect fuel pump relay.
3. Turn ignition switch "ON".
4. Check voltage between terminals ①, ③ and ground with CONSULT or tester.
   Voltage: Battery voltage

NG → Check the following.
- 15A fuse
- Harness connectors (E101), (M5)
- Harness for open or short between fuse and fuel pump relay

If NG, repair harness or connectors.

OK ↓

C

CHECK GROUND CIRCUIT.
1. Turn ignition switch "OFF".
2. Disconnect fuel pump harness connector.
3. Check harness continuity between terminal ⑥ and body ground, relay terminal ⑤ and terminal ⑤.
   Continuity should exist.
   If OK, check harness for short to ground and short to power.

NG → Check the following.
- Harness connectors (C1), (M111)
- Harness connectors (E101), (M5)
- Harness for open or short between fuel pump and body ground
- Harness for open or short between fuel pump and fuel pump relay

If NG, repair open circuit, short to ground or short to power in harness or connectors.

OK ↓

D

CHECK OUTPUT SIGNAL CIRCUIT.
1. Disconnect ECM harness connector.
2. Check harness continuity between ECM terminal (104) and terminal ②.
   Continuity should exist.
   If OK, check harness for short to ground and short to power.

NG → Check the following.
- Harness connectors (E101), (M5)
- Harness connectors (M48), (F54) (RHD models)
- Harness for open or short between ECM and fuel pump relay

If NG, repair open circuit, short to ground or short to power in harness or connectors.

OK ↓

Ⓐ
(Go to next page.)

Fuel Pump (Cont'd)

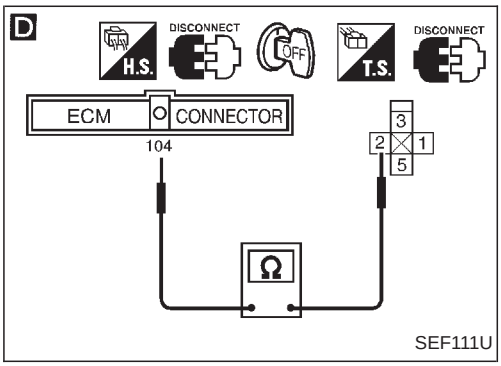

SEF111U

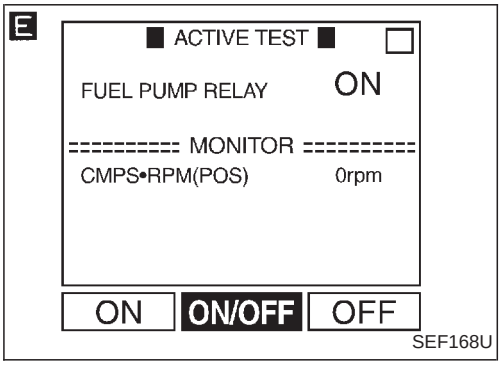

SEF168U

Ⓐ

E

CHECK COMPONENT
(Fuel pump relay).

1. Reconnect fuel pump relay, fuel pump harness connector and ECM harness connector.
2. Turn ignition switch "ON".
3. Turn fuel pump relay "ON" and "OFF" in "ACTIVE TEST" mode with CONSULT and check operating sound.

OR

Refer to "COMPONENT INSPECTION" below.

NG → Replace fuel pump relay.

OK ↓

CHECK COMPONENT
(Fuel pump).
Refer to "COMPONENT INSPECTION" below.

NG → Replace fuel pump.

OK ↓

Disconnect and reconnect harness connectors in the circuit. Then retest.

Trouble is not fixed. ↓

Check ECM pin terminals for damage and check the connection of ECM harness connector. Reconnect ECM harness connector and retest.

↓

INSPECTION END

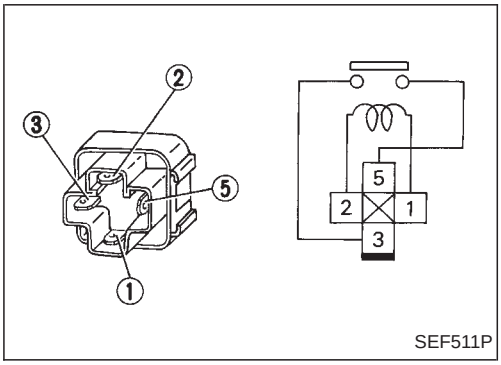

SEF511P

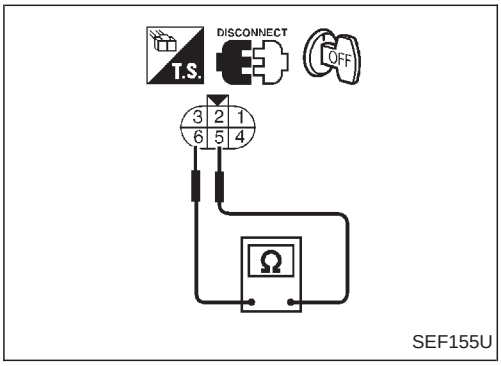

SEF155U

COMPONENT INSPECTION

Fuel pump relay

Check continuity between terminals ③ and ⑤.

Conditions	Continuity
12V direct current supply between terminals ① and ②	Yes
No current supply	No

If NG, replace relay.

Fuel pump

1. Disconnect fuel pump harness connector.
2. Check resistance between terminals ⑤ and ⑥.
   Resistance: 0.2 - 5.0Ω at 25°C (77°F)

   If NG, replace fuel pump.

Power Steering Oil Pressure Switch

EC-PST/SW-01

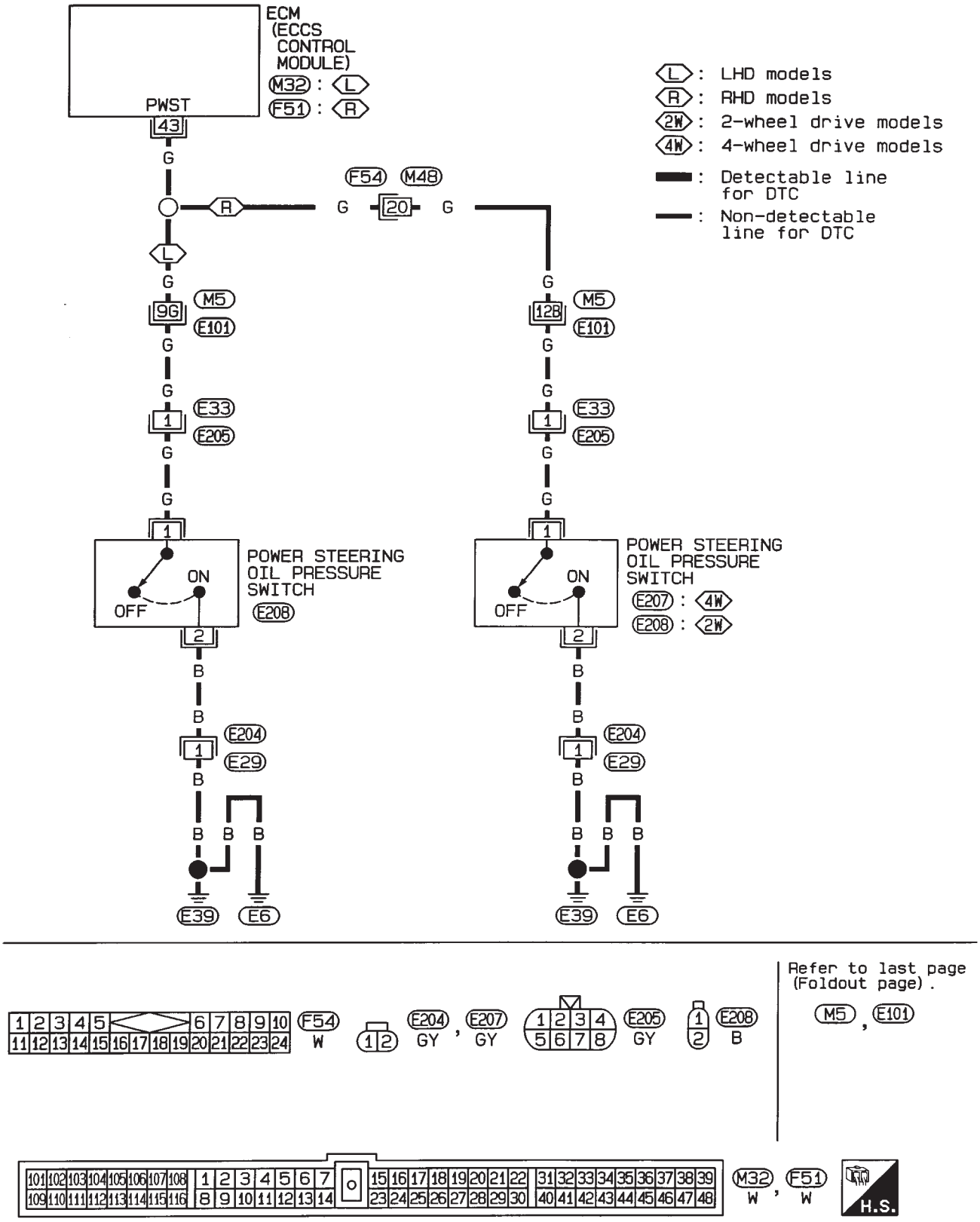

HEC356

Power Steering Oil Pressure Switch (Cont'd)

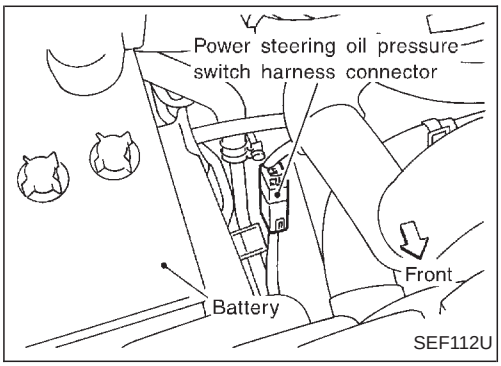

COMPONENT DESCRIPTION

The power steering oil pressure switch is attached to the power steering high-pressure tube and detects a power steering load. When a power steering load is detected, it signals the ECM. The ECM adjusts the IACV-AAC valve to increase the idle speed and adjust for the increased load.

CONSULT REFERENCE VALUE IN DATA MONITOR MODE

Remarks: Specification data are reference values.

MONITOR ITEM	CONDITION		SPECIFICATION
PW/ST SIGNAL	● Engine: After warming up, idle the engine	Steering wheel in neutral position (forward direction)	OFF
		The steering wheel is turned	ON

ECM TERMINALS AND REFERENCE VALUE

Remarks: Specification data are reference values, and are measured between each terminal and ㊴ (ECCS ground) with a voltmeter.

TERMINAL NO.	WIRE COLOR	ITEM	CONDITION	DATA (DC voltage)
43	G	Power steering oil pressure switch	Engine is running. └ Steering wheel is being turned.	0V
			Engine is running. └ Steering wheel is not being turned.	Approximately 5V

Power Steering Oil Pressure Switch (Cont'd)

DIAGNOSTIC PROCEDURE

A

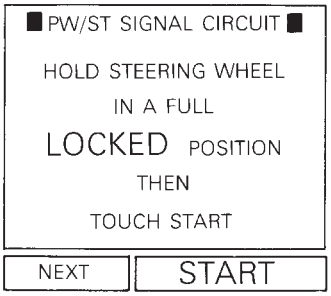

MEF023E

A

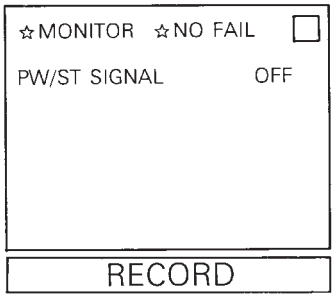

SEF591I

A

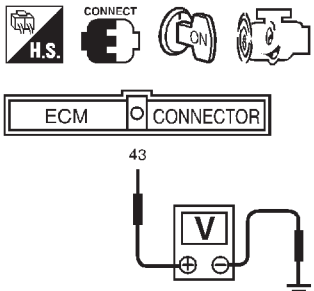

SEF113U

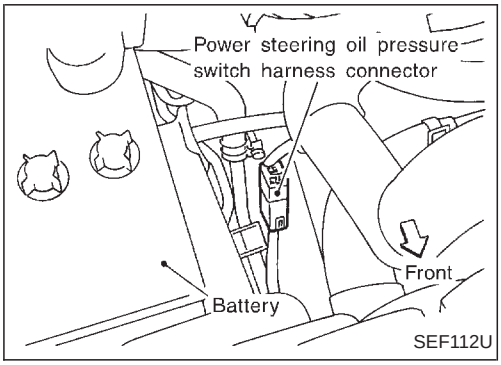

SEF112U

B

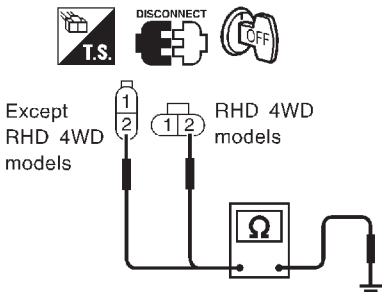

SEF156U

INSPECTION START

A

CHECK OVERALL FUNCTION.

1. Turn ignition switch "ON".
2. Perform "PW/ST SIGNAL CIRCUIT" in "FUNCTION TEST" mode with CONSULT.

OR

1. Start engine.
2. Check "PW/ST SIGNAL" in "DATA MONITOR" mode with CONSULT.

Steering is neutral position: OFF
Steering is turned: ON

OR

1. Start engine.
2. Check voltage between ECM terminal ㊸ and ground.

Voltage:
When steering wheel is turned quickly
Approximately 0V
Except above
Approximately 5V

OK → INSPECTION END

NG ↓

B

CHECK GROUND CIRCUIT.

1. Turn ignition switch "OFF".
2. Disconnect power steering oil pressure switch harness connector.
3. Check harness continuity between terminal ② and engine ground.

Continuity should exist.

If OK, check harness for short to ground and short to power.

NG → Check the following.
- Harness connectors E204, E29
- Harness for open or short between power steering oil pressure switch and engine ground

If NG, repair open circuit, short to ground or short to power in harness or connectors.

OK ↓

Ⓐ

(Go to next page.)

Power Steering Oil Pressure Switch (Cont'd)

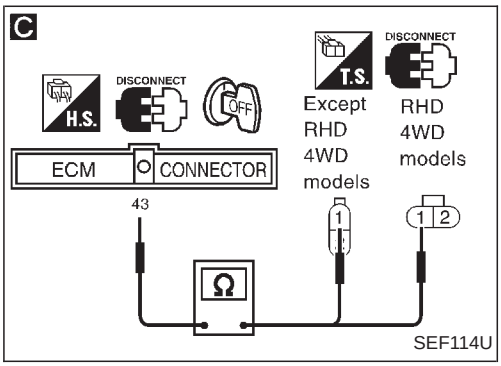

Ⓐ

C

CHECK INPUT SIGNAL CIRCUIT.
1. Disconnect ECM harness connector.
2. Check harness continuity between ECM terminal ㊸ and terminal ①.
   Continuity should exist.
   If OK, check harness for short to ground and short to power.

NG → Check the following.
- Harness connectors (E205), (E33)
- Harness connectors (E101), (M5)
- Harness connectors (M48), (F54) (RHD models)
- Harness for open or short between ECM and power steering oil pressure switch

If NG, repair open circuit, short to ground or short to power in harness or connectors.

OK ↓

CHECK COMPONENT
(Power steering oil pressure switch).
Refer to "COMPONENT INSPECTION" below.

NG → Replace power steering oil pressure switch.

OK ↓

Disconnect and reconnect harness connectors in the circuit. Then retest.

Trouble is not fixed. ↓

Check ECM pin terminals for damage and check the connection of ECM harness connector. Reconnect ECM harness connector and retest.

↓

INSPECTION END

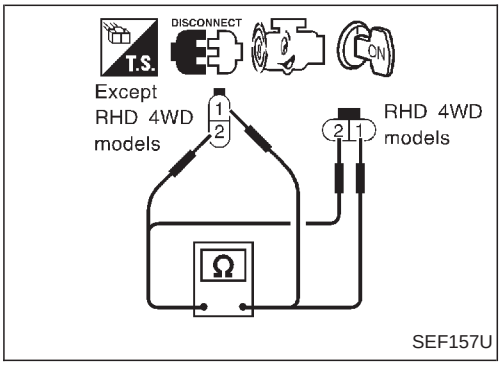

COMPONENT INSPECTION

Power steering oil pressure switch

1. Disconnect power steering oil pressure switch harness connector then start engine.
2. Check continuity between terminals ① and ②.

Conditions	Continuity
Steering wheel is being turned	Yes
Steering wheel is not being turned	No

If NG, replace power steering oil pressure switch.

Swirl Control Valve Control Solenoid Valve

SYSTEM DESCRIPTION

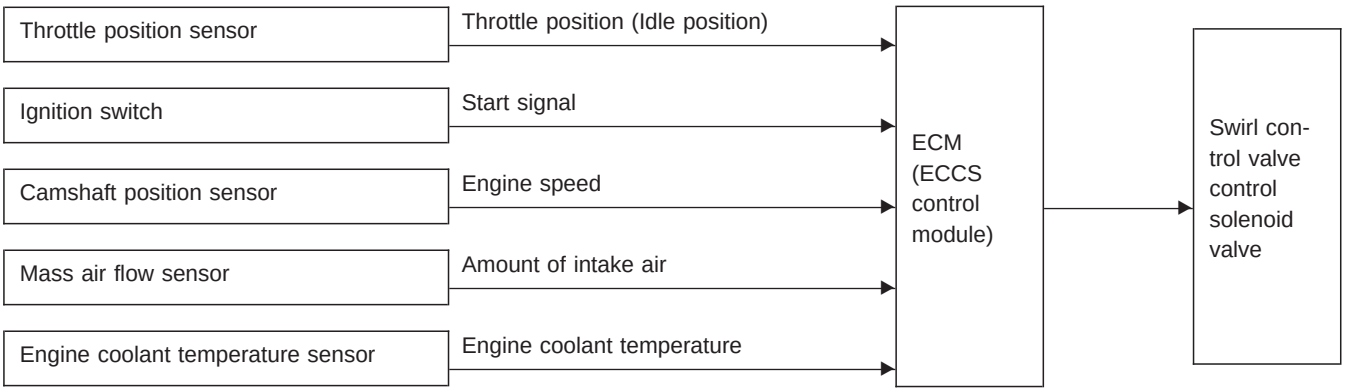

This system has a swirl control valve in the intake passage of each cylinder.
While idling and during low engine speed operation, the swirl control valve closes. Thus the velocity of the air in the intake passage increases, promoting the vaporization of the fuel and producing a swirl in the combustion chamber.
Because of this operation, this system tends to increase the burning speed of the gas mixture, improve fuel consumption, and increase the stability in running conditions.
Also, except when idling and during low engine speed operation, this system opens the swirl control valve. In this condition, this system tends to increase power by improving intake efficiency via reduction of intake flow resistance, intake flow.

The solenoid valve controls swirl control valve's shut/open condition. This solenoid valve is operated by the ECM.

Throttle position switch	Engine speed	Swirl control valve control solenoid valve	Swirl control valve
Idle	Below 3,600 rpm	ON	Closed
Except idle	More than 3,600 rpm	OFF	Open

When engine coolant temperature is below 0°C (32°F) swirl control valve is kept open.

CONSULT REFERENCE VALUE IN DATA MONITOR MODE

Remarks: Specification data are reference values.

MONITOR ITEM	CONDITION	SPECIFICATION
SWRL CONT S/V	• Engine is running at a speed of less than 3,600 rpm.	ON
	• Except above	OFF

ECM TERMINALS AND REFERENCE VALUE

Remarks: Specification data are reference values, and are measured between each terminal and ㊴ (ECCS ground) with a voltmeter.

TERMINAL NO.	WIRE COLOR	ITEM	CONDITION	DATA (DC voltage)
12	GY	Swirl control valve control solenoid valve	Engine is running. └ Idle speed	0 - 1V
			Engine is running. └ Engine speed is above 3,600 rpm.	BATTERY VOLTAGE (11 - 14V)

Swirl Control Valve Control Solenoid Valve (Cont'd)

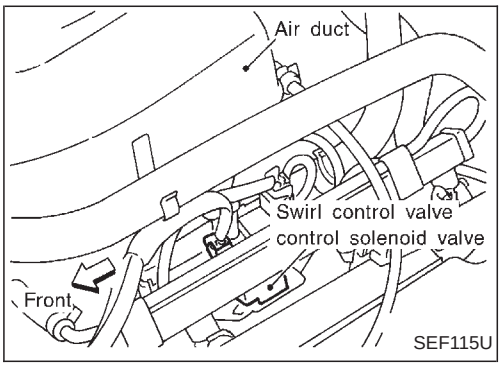

COMPONENT DESCRIPTION

Swirl control valve control solenoid valve

The swirl control valve control solenoid valve responds to signals from the ECM. When the ECM sends an ON (ground) signal, the solenoid valve is bypassed to apply intake manifold vacuum to the swirl control valve actuator. This operation closes the swirl control valve. When the ECM sends an OFF signal, the vacuum signal is cut and the swirl control valve opens.

Swirl Control Valve Control Solenoid Valve (Cont'd)

EC-SWL/V-01

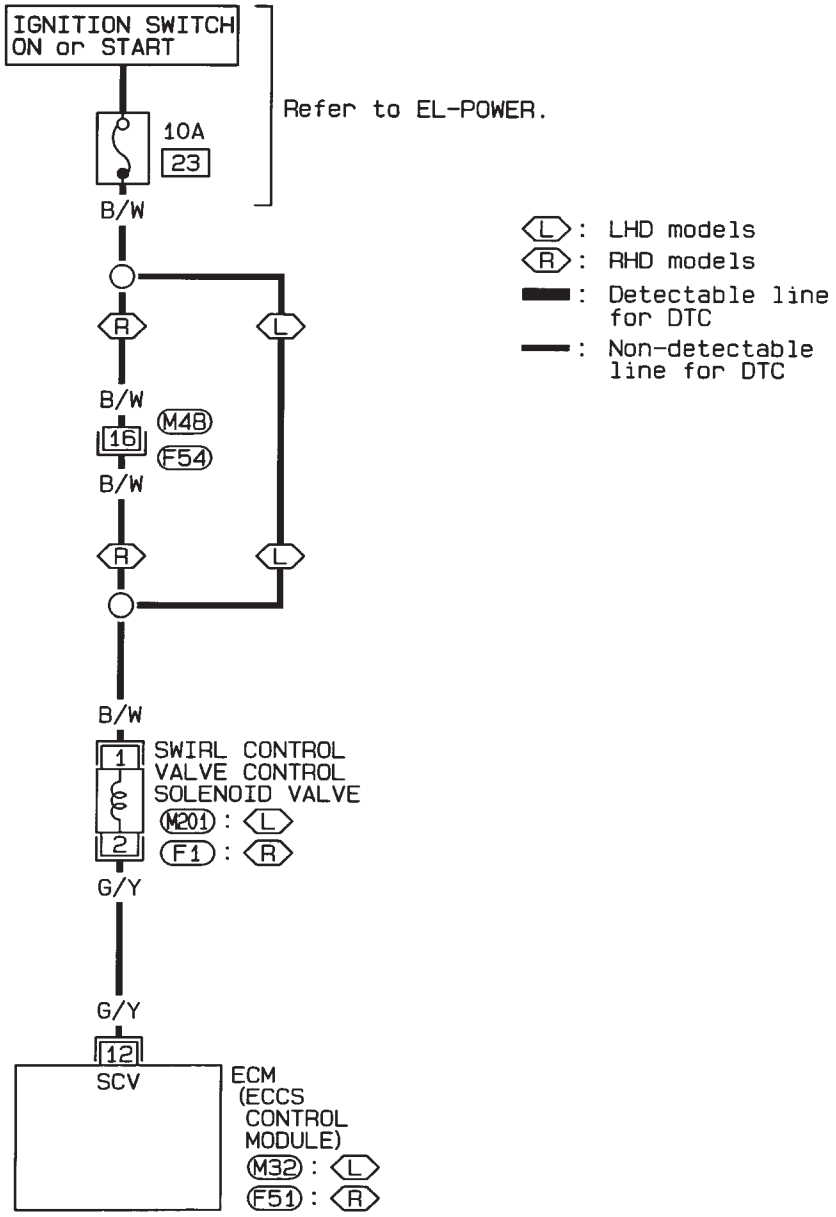

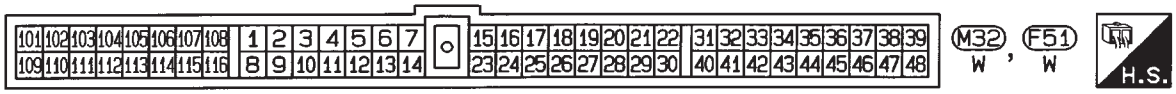

HEC360

Swirl Control Valve Control Solenoid Valve (Cont'd)

DIAGNOSTIC PROCEDURE

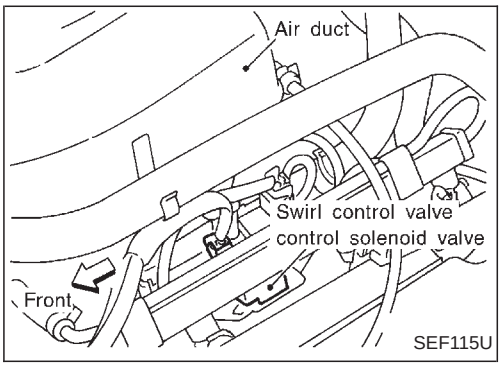

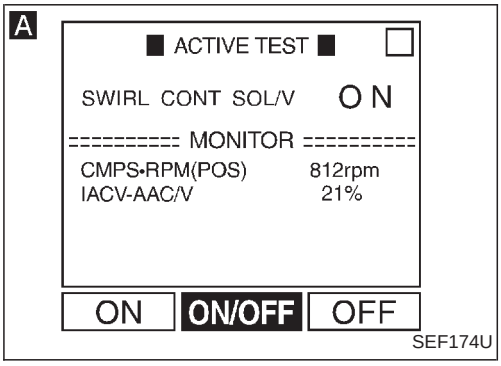

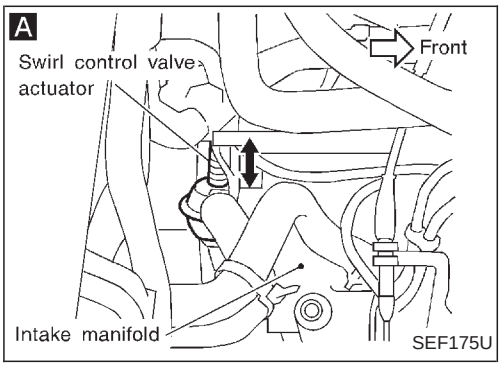

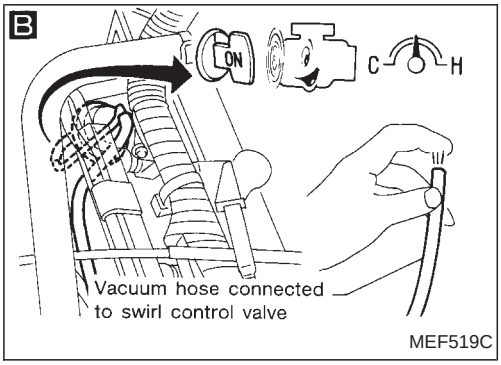

INSPECTION START

A

CHECK OVERALL FUNCTION.

1. Start engine and warm it up sufficiently.
2. Perform "SWRL CONT S/V CIRCUIT" in "ACTIVE TEST" mode with CONSULT.
3. Turn swirl control valve control solenoid valve "ON" and "OFF", and check that swirl control valve actuator operates.

OR

1. Start engine and warm it up sufficiently.
2. Rev engine speed from idle to more than 3,600 rpm, and check that swirl control valve actuator operates.

OK → CHECK COMPONENT (Swirl control valve). Refer to "COMPONENT INSPECTION", EC-166. If NG, replace swirl control valve. → OK → INSPECTION END

NG ↓

B

CHECK VACUUM TO SWIRL CONTROL VALVE.

1. Stop engine.
2. Disconnect vacuum hose to swirl control valve and restart engine.
3. Check vacuum exists under the following conditions.
   Engine speed is less than 3,600 rpm: Vacuum should exist.
   Engine speed is more than 3,600 rpm: Vacuum should not exist.

OK → **CHECK COMPONENT (Swirl control valve actuator).** Refer to "COMPONENT INSPECTION", EC-166. If NG, replace swirl control valve actuator.

NG ↓

Ⓐ

(Go to next page.)

Swirl Control Valve Control Solenoid Valve (Cont'd)

C

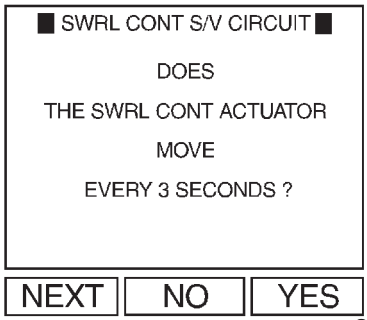

SEF167U

C

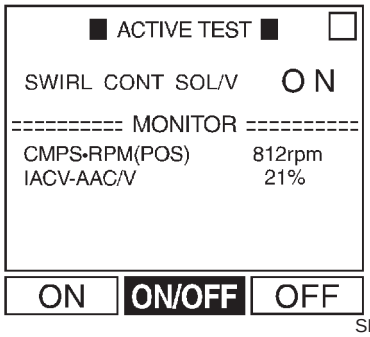

SEF174U

C

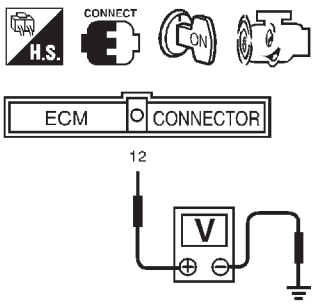

SEF176U

D

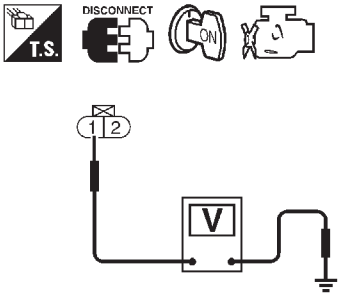

SEF212S

E

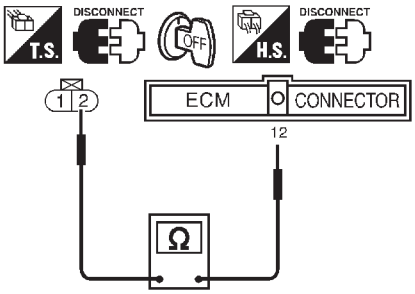

SEF116U

Ⓐ

C

CHECK SWIRL CONTROL VALVE CONTROL SOLENOID VALVE OPERATION.

1. Stop engine.
2. Turn ignition switch "ON".
3. Perform "SWRL CONT S/V CIRCUIT" in "FUNCTION TEST" mode with CONSULT.

OR

2. Turn ignition switch "ON".
3. Perform "SWRL CONT S/V CIRCUIT" in "ACTIVE TEST" mode with CONSULT.
4. Turn swirl control valve control solenoid valve "ON" and "OFF", and listen to swirl control valve control solenoid valve operating sound.

OR

2. Start engine and warm it up sufficiently.
3. Check voltage between ECM terminal ⑫ and ground under the following condition.
   Engine speed is less than 3,600 rpm:
   Voltage: 0 - 1V
   Engine speed is more than 3,600 rpm:
   Voltage: Battery voltage

OK →
Check the following.
- Vacuum hose improper connection
  Refer to "Vacuum Hose Drawing", EC-13.
- Vacuum hose clogging or cracks.
- Vacuum tank
  Refer to "COMPONENT INSPECTION", EC-166.
- One-way valve
  Refer to "COMPONENT INSPECTION", EC-166.

If NG, repair or replace malfunctioning part(s).

NG ↓

D

CHECK POWER SUPPLY.

1. Turn ignition switch "OFF".
2. Disconnect swirl control valve control solenoid valve harness connector.
3. Turn ignition switch "ON".
4. Check voltage between terminal ① and ground with CONSULT or tester.
   Voltage: Battery voltage

NG →
Check the following.
- Harness connectors (F54), (M48) (RHD models)
- 10A fuse
- Harness for open or short between swirl control valve control solenoid valve and fuse

If NG, repair harness or connectors.

OK ↓

E

CHECK INPUT SIGNAL CIRCUIT.

1. Turn ignition switch "OFF".
2. Disconnect ECM harness connector.
3. Check continuity between terminal ② and ECM terminal ⑫.
   Continuity should exist.
   If OK, check harness for short to ground and short to power.

NG →
Repair open circuit, short to ground or short to power in harness or connectors.

OK ↓

Ⓑ

Swirl Control Valve Control Solenoid Valve (Cont'd)

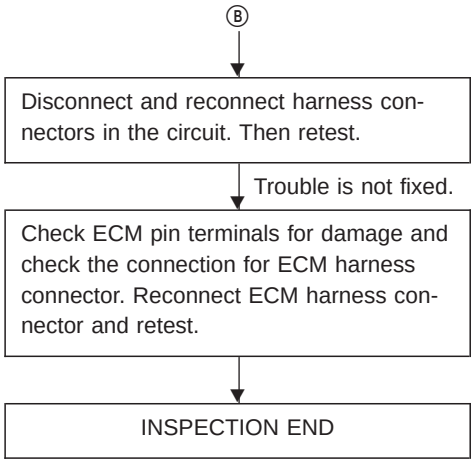

Swirl Control Valve Control Solenoid Valve (Cont'd)

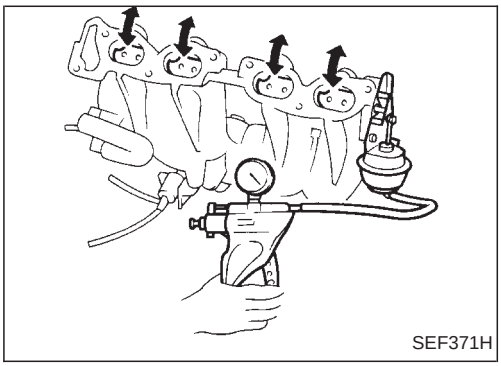
SEF371H

COMPONENT INSPECTION

Swirl control valve

Supply vacuum to actuator and check swirl control valve operation.

Condition	Swirl control valve
Supply vacuum to actuator	Close
No supply	Open

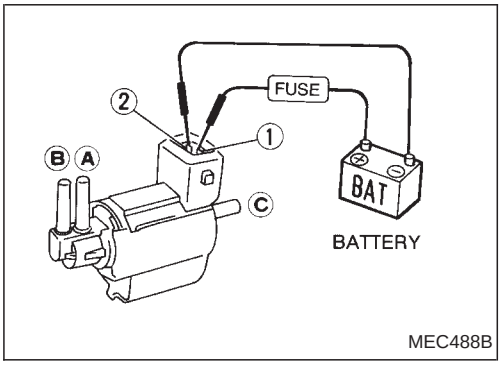

MEC488B

Swirl control valve control solenoid valve

Check solenoid valve air passage continuity.

Condition	Air passage continuity between Ⓐ and Ⓑ	Air passage continuity between Ⓐ and Ⓒ
12V direct current supply between terminals ① and ②	Yes	No
No supply	No	Yes

If NG, replace solenoid valve.

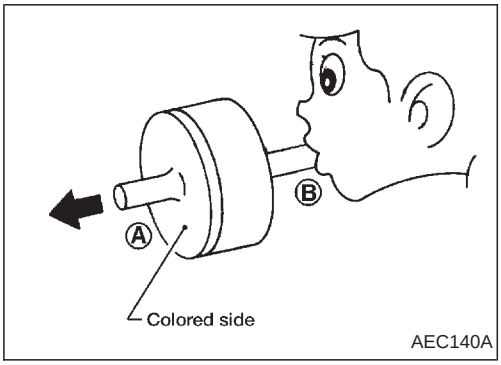

AEC140A

One-way valve

Check one-way valve air passage continuity.

Condition	Air passage continuity
Blow air from side B to A	Yes
Blow air from side A to B	No

If NG, replace one-way valve.

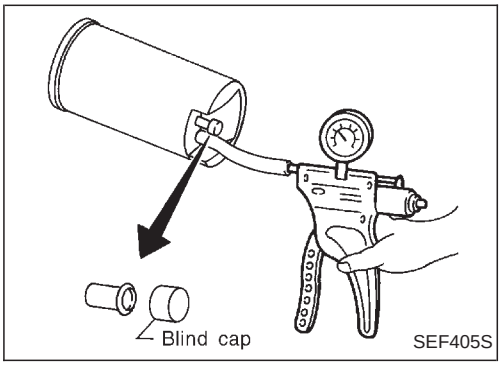

SEF405S

Vacuum tank

Check vacuum tank leakage.
Apply vacuum −80.0 kPa (−800 mbar, −600 mmHg, −23.62 inHg).
Then keep it for 10 seconds and check there is no leakage.

IACV-FICD Solenoid Valve

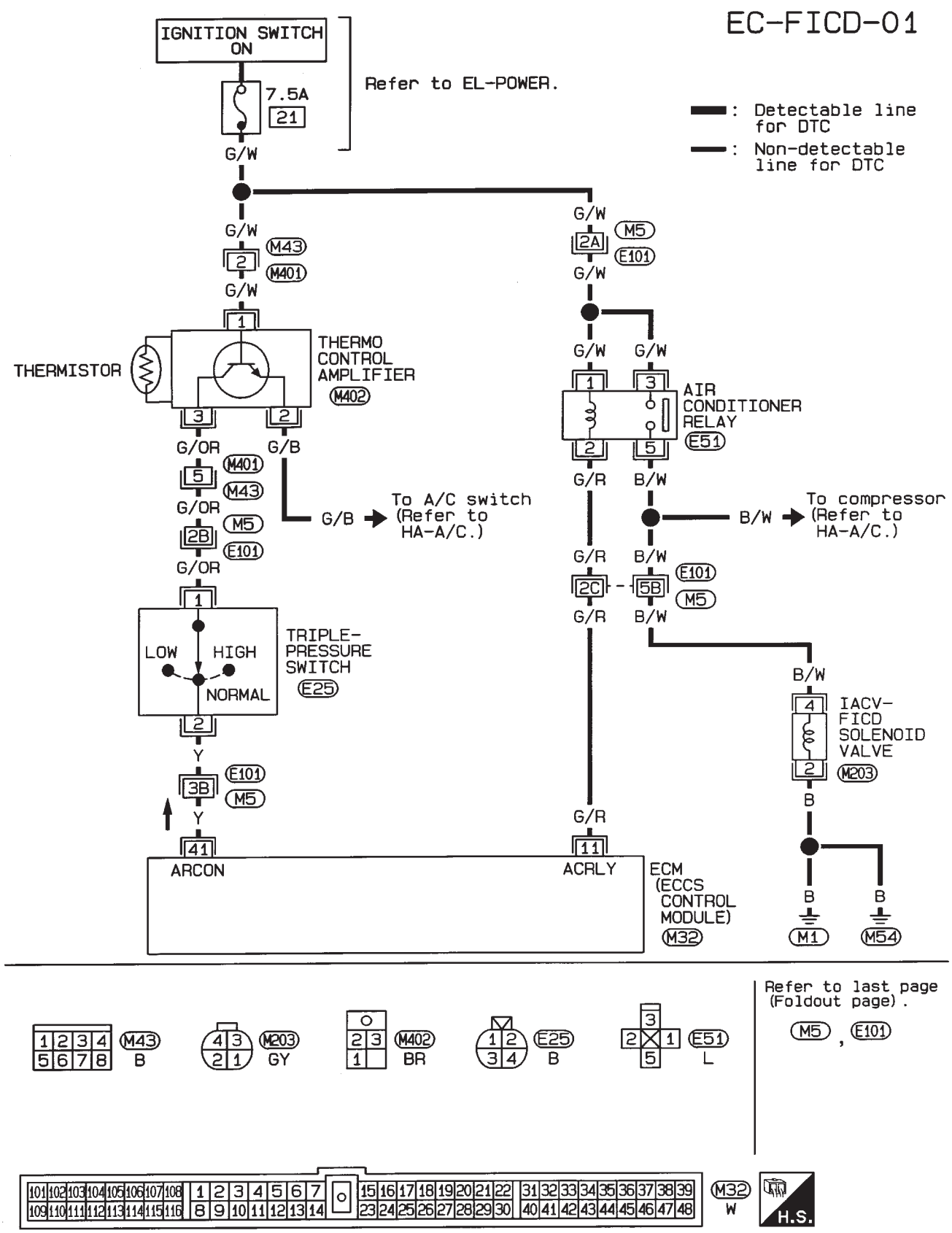

HEC361

IACV-FICD Solenoid Valve (Cont'd)

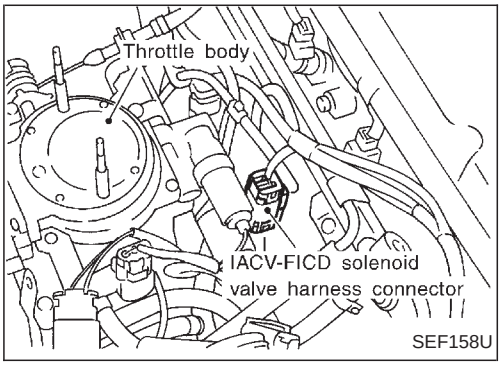

COMPONENT DESCRIPTION

The idle air adjusting (IAA) unit is made up of the IACV-AAC valve, IACV-FICD solenoid valve and idle adjusting screw. It receives the signal from the ECM and controls the idle speed at the preset value.

ECM TERMINALS TERMINALS AND REFERENCE VALUE

Remarks: Specification data are reference values and are measured between each terminal and ㊴ (ECCS ground) with a voltmeter.

TER-MINAL NO.	WIRE COLOR	ITEM	CONDITION	DATA (DC voltage)
11	G/R	Air conditioner relay	Engine is running. └ Both air conditioner switch and blower switch are "ON". (Compressor operates.)	Approximately 1V
			Engine is running. └ Air conditioner switch is "OFF".	BATTERY VOLTAGE (11 - 14V)
41	Y	Air conditioner switch	Engine is running. └ Both air conditioner switch and blower switch are "ON". (Compressor operates.)	Approximately 0V
			Engine is running. └ Air conditioner switch is "OFF".	BATTERY VOLTAGE (11 - 14V)

IACV-FICD Solenoid Valve (Cont'd)

DIAGNOSTIC PROCEDURE

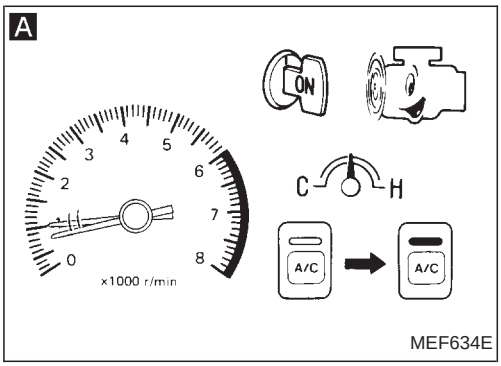

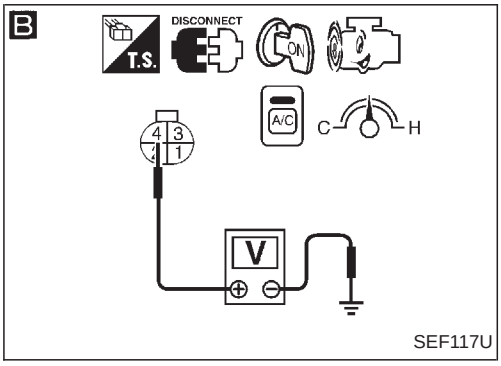

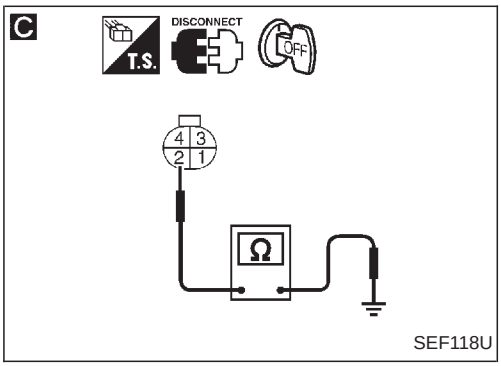

INSPECTION START

A

CHECK OVERALL FUNCTION.
1. Start engine and warm it up sufficiently.
2. Check idle speed.
   800±50 rpm
   If NG, adjust idle speed.
3. Turn air conditioner switch and blower fan switch "ON".
4. Recheck idle speed.
   900 rpm or more

OK → INSPECTION END

NG ↓

Check if air conditioner compressor functions normally.

NG → Refer to HA section.

OK ↓

B

CHECK POWER SUPPLY.
1. Stop engine.
2. Disconnect IACV-FICD solenoid valve harness connector.
3. Restart engine and turn air conditioner switch and blower fan switch "ON".
4. Check voltage between terminal ④ and ground with CONSULT or tester.
   Voltage: Battery voltage

NG → Check the following.
- Harness connectors, E101, M5
- Harness for open or short between IACV-FICD solenoid valve and air conditioner relay

If NG, repair harness or connectors.

OK ↓

C

CHECK GROUND CIRCUIT.
1. Turn ignition switch "OFF".
2. Check harness continuity between terminal ② and body ground.
   Continuity should exist.
   If OK, check harness for short to ground and short to power.

NG → Repair open circuit, short to ground or short to power in harness or connectors.

OK ↓

CHECK COMPONENT
(IACV-FICD solenoid valve).
Refer to "COMPONENT INSPECTION" on next page.

NG → Replace IACV-FICD solenoid valve.

OK ↓

Ⓐ
(Go to next page.)

IACV-FICD Solenoid Valve (Cont'd)

Ⓐ

↓

Disconnect and reconnect harness connectors in the circuit. Then retest.

↓ Trouble is not fixed.

Check ECM pin terminals for damage and check the connection of ECM harness connector. Reconnect ECM harness connector. Then retest.

↓

INSPECTION END

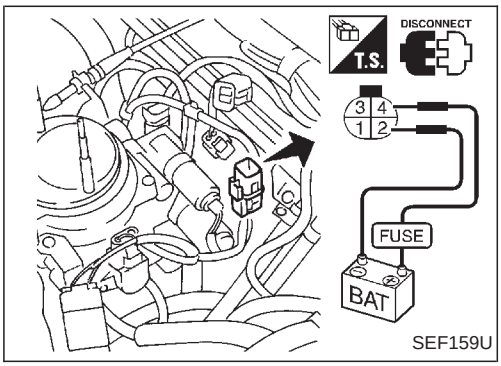

SEF159U

COMPONENT INSPECTION

IACV-FICD solenoid valve

Disconnect IACV-FICD solenoid valve harness connector.

- Check for clicking sound when applying 12V direct current to terminals.

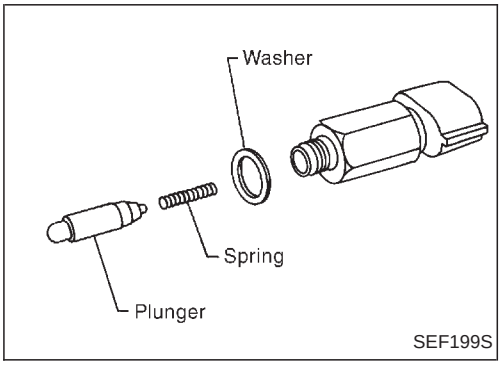

SEF199S

- Check plunger for seizing or sticking.
- Check for broken spring.

MIL & Data Link Connectors

LHD MODELS

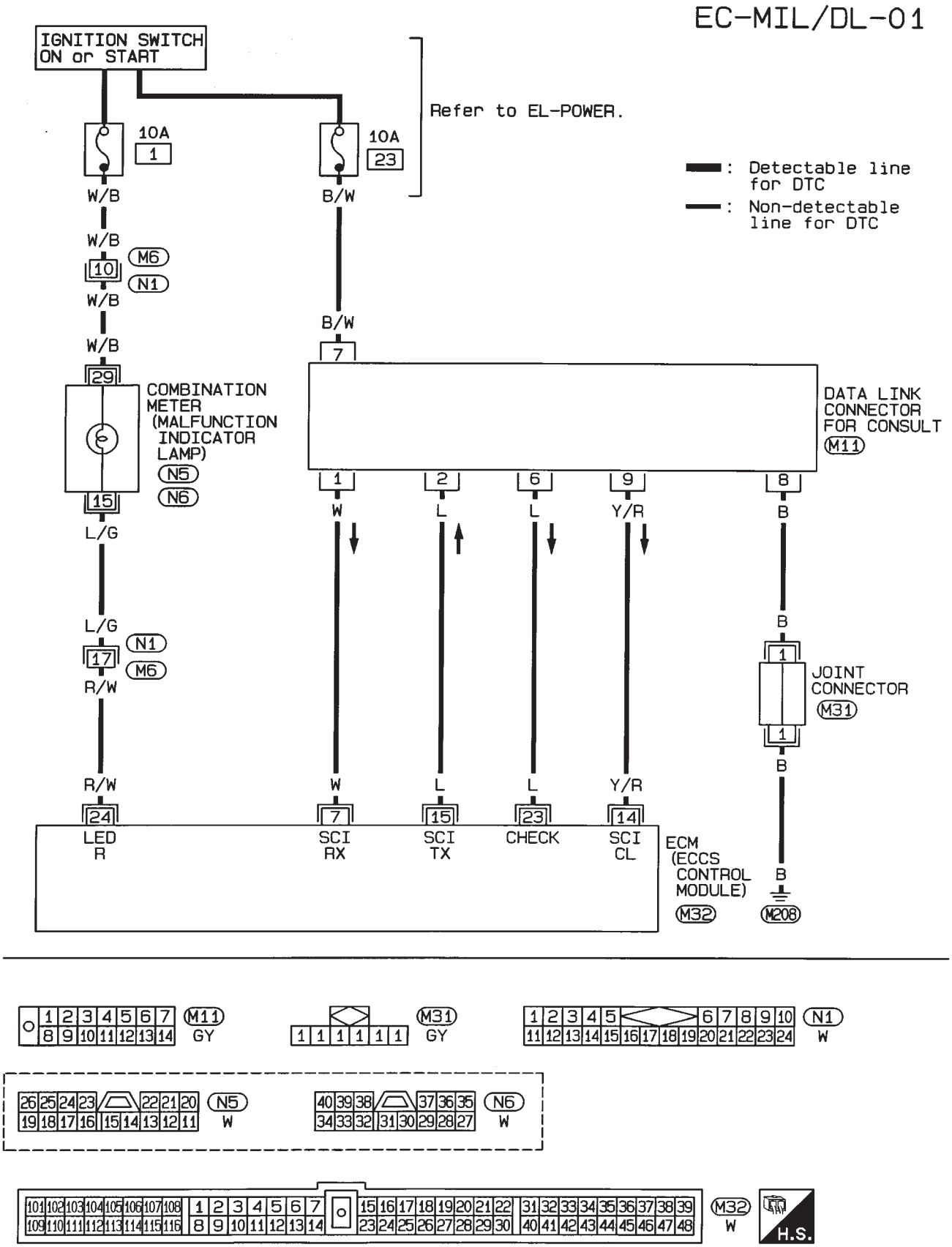

HEC362

MIL & Data Link Connectors (Cont'd)

RHD MODELS

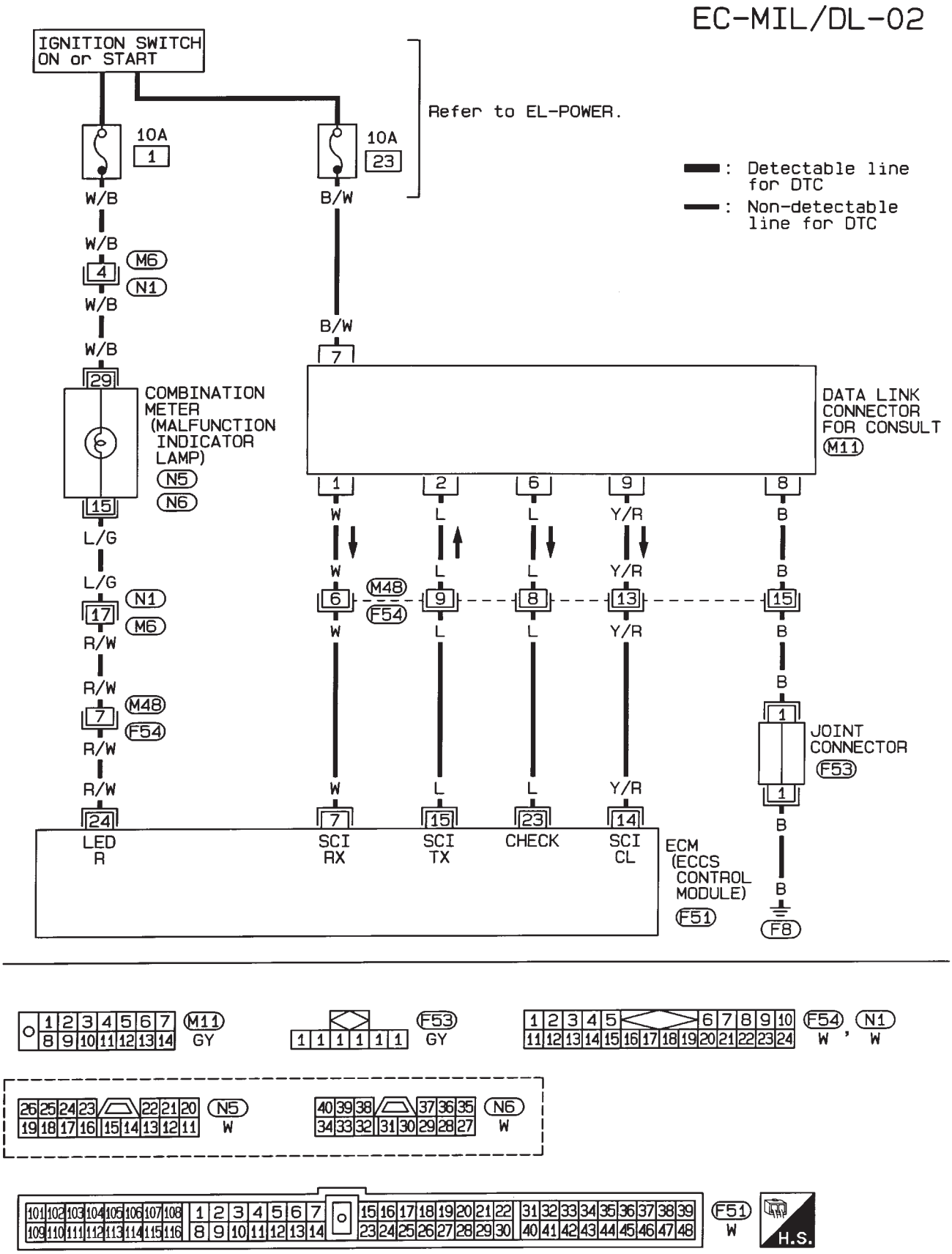

HEC363

Component Parts Location

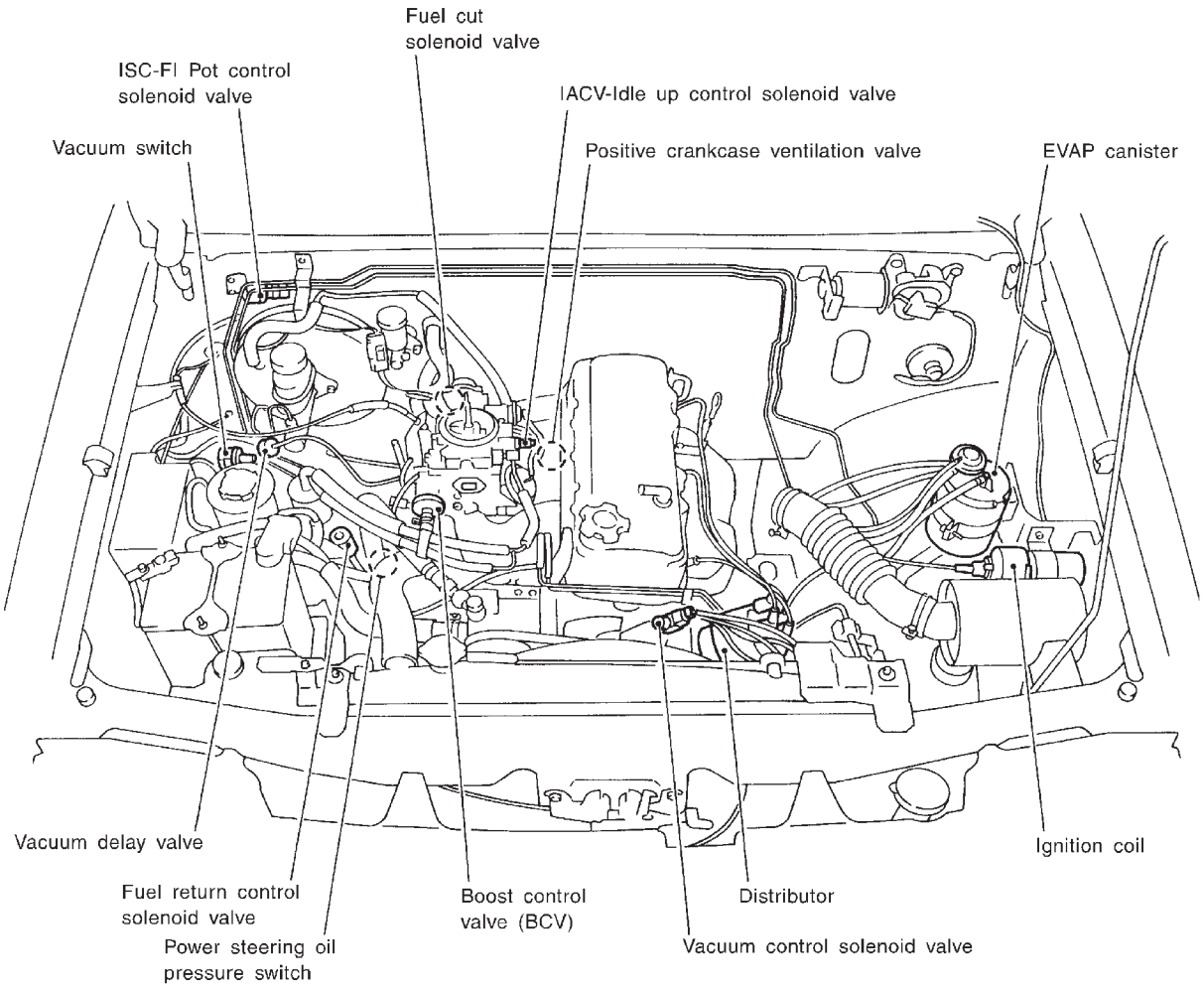

SEF981T

System Diagram

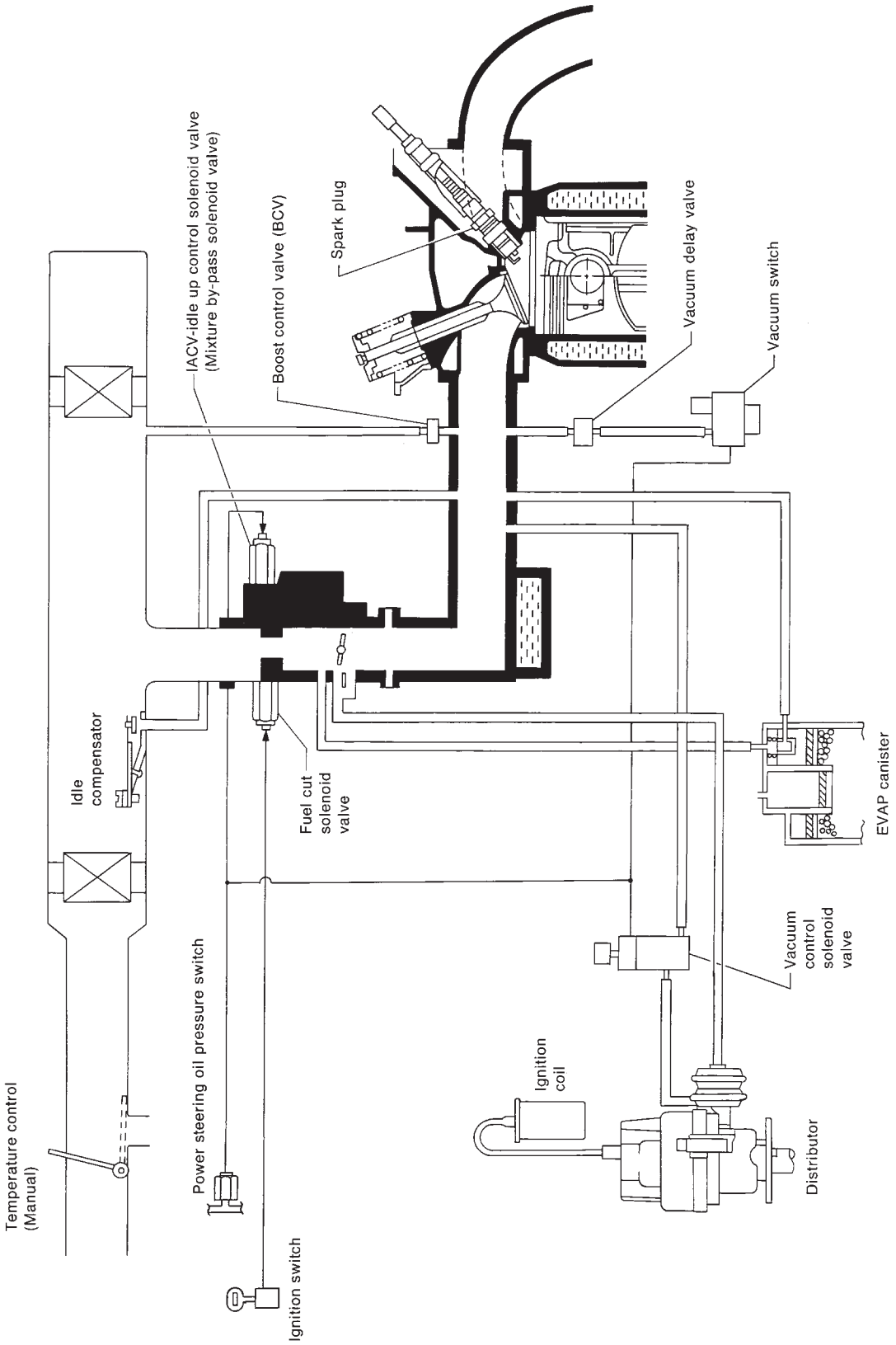

SEF785NA

Circuit Diagram

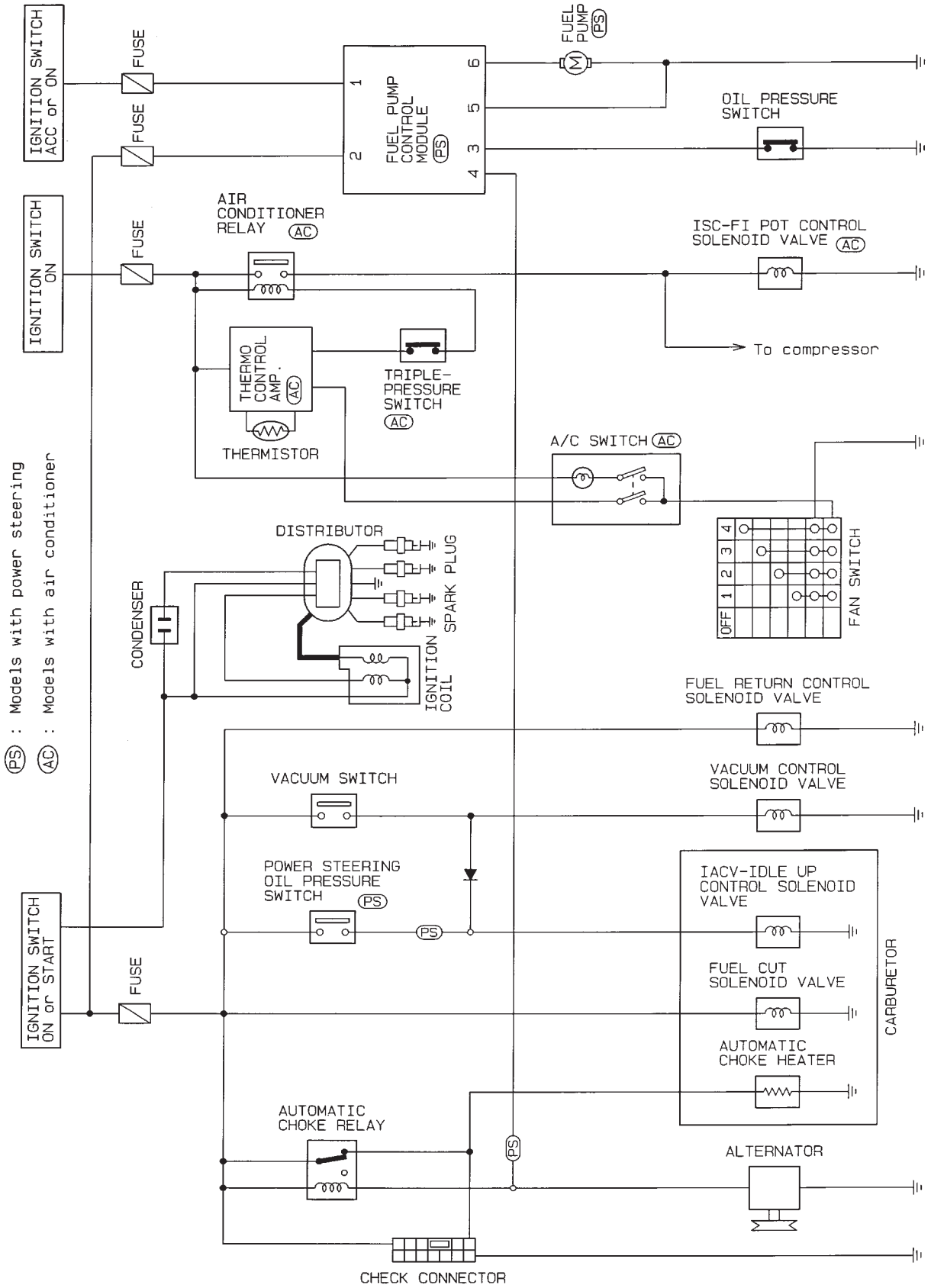

HEC374

Vacuum Hose Drawing

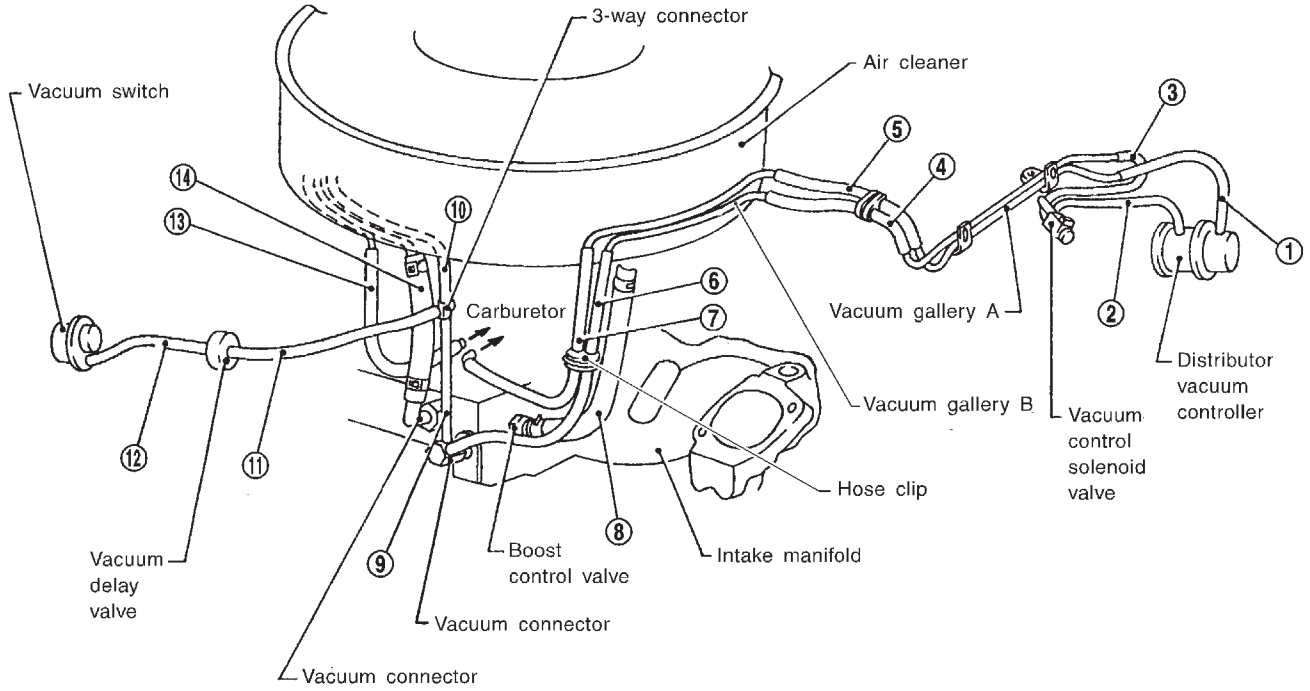

SEF145U

① Distributor to vacuum gallery
② Distributor to vacuum control solenoid valve
③ Vacuum control solenoid valve to vacuum gallery
④ Vacuum gallery A to vacuum gallery B
⑤ Vacuum gallery A to vacuum gallery B
⑥ Vacuum gallery B to vacuum connector
⑦ Vacuum gallery B to carburetor
⑧ Air cleaner to boost control valve
⑨ Vacuum connector to 3-way connector
⑩ 3-way connector to idle compensator
⑪ 3-way connector to vacuum delay valve
⑫ Vacuum delay valve to vacuum switch
⑬ Carburetor to air cleaner (EVAP canister vacuum line)
⑭ Vacuum connector to air cleaner (EVAP canister purge line)

Construction

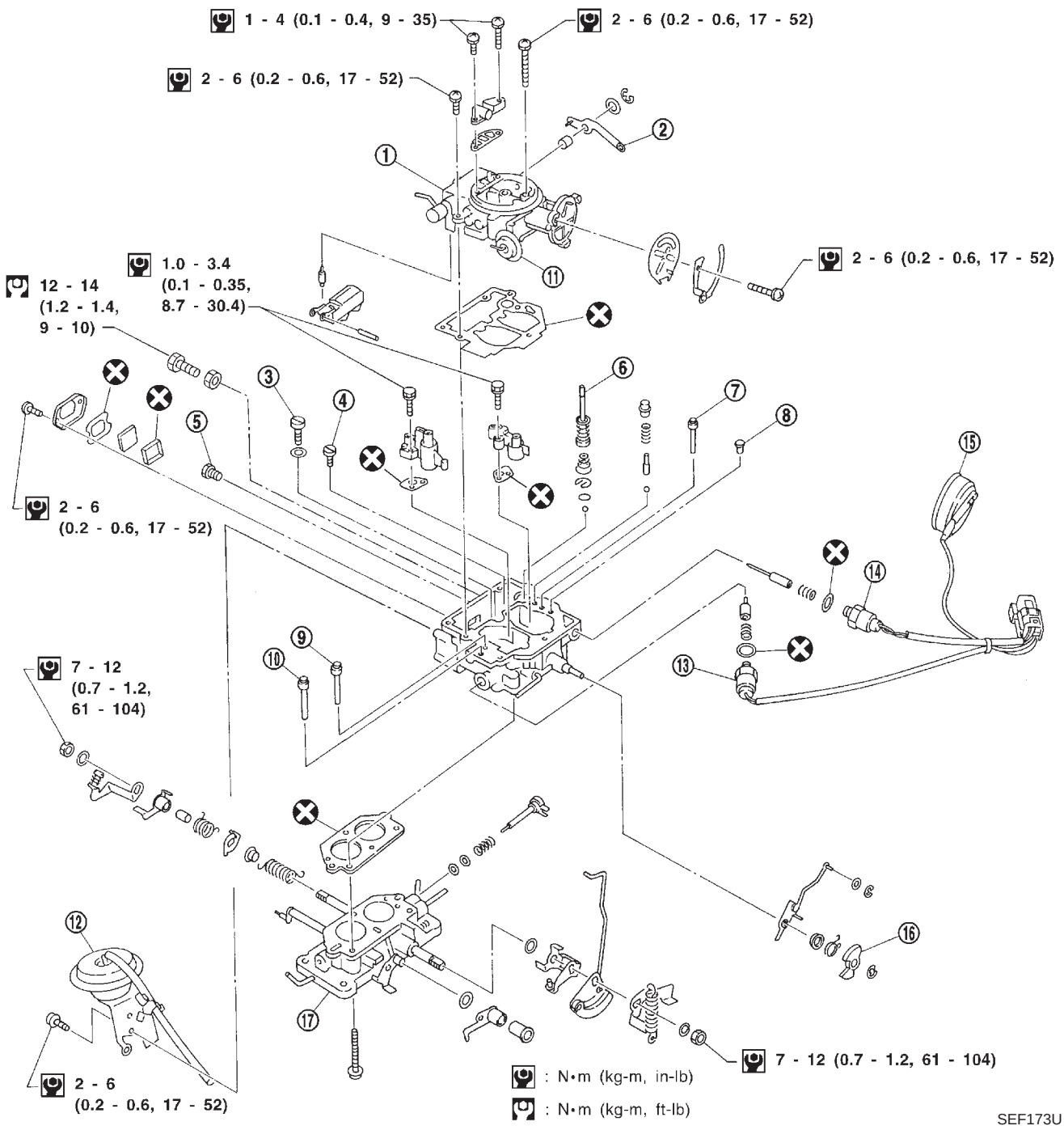

① Choke chamber
② Accelerator pump lever
③ Power jet
④ Secondary main jet
⑤ Primary main jet
⑥ Accelerator pump piston
⑦ Primary slow jet
⑧ Primary slow air bleed
⑨ Secondary slow jet
⑩ Idle-up jet
⑪ Vacuum break diaphragm
⑫ Diaphragm for secondary system
⑬ IACV-idle up control solenoid valve (Mixture by-pass solenoid valve)
⑭ Fuel cut solenoid valve
⑮ Auto choke heater
⑯ Fast idle cam
⑰ Throttle body

Construction (Cont'd)

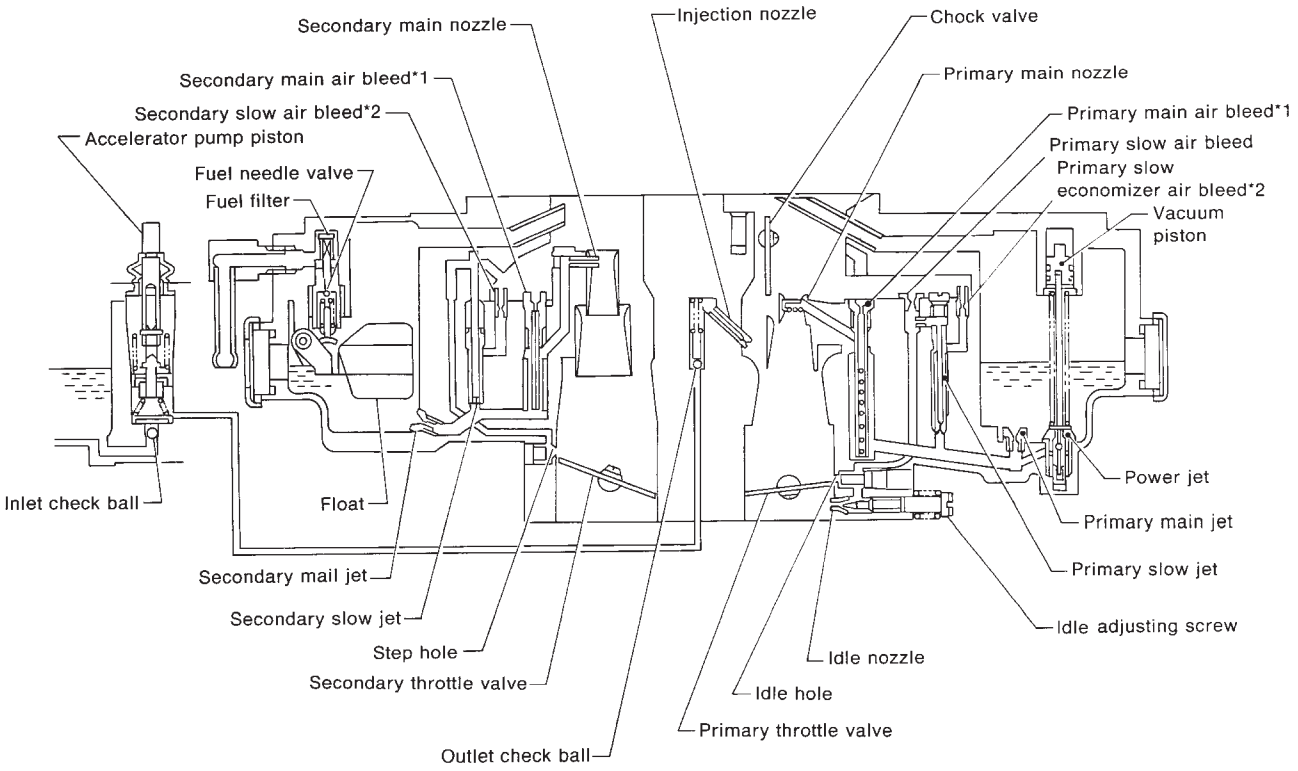

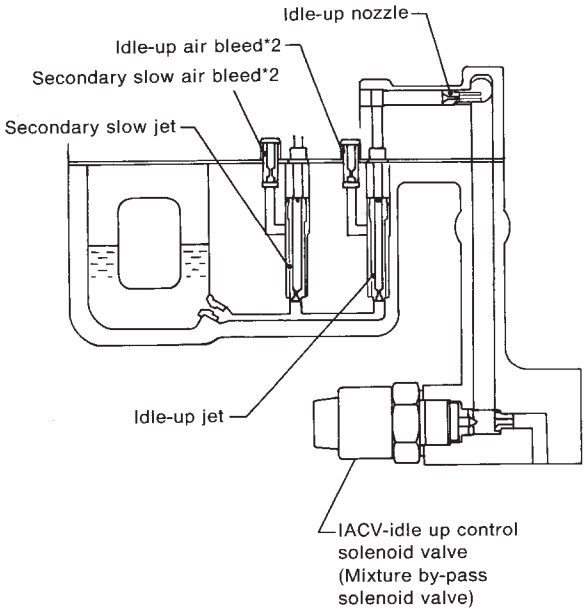

IACV-idle up control system (Mixture by-pass control system)

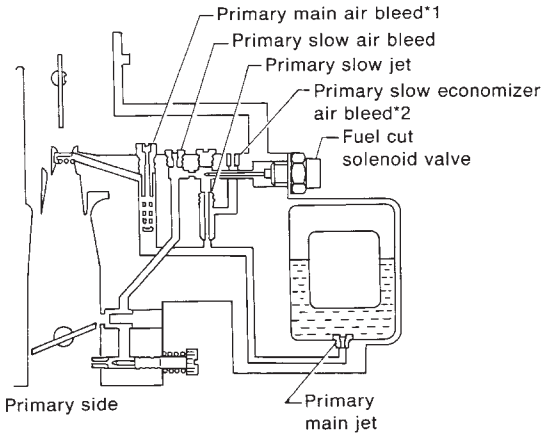

Fuel cut control system

*1: This air bleed cannot be removed from small venturi.
*2: This air bleed cannot be removed from carburetor.

SEF020NA

Major Service Operation

The perfectly adjusted carburetor delivers the proper fuel and air ratios at all speeds for the particular engine for which it was designed.
The carburetor should be maintained in its original condition and will continue to deliver the proper ratios.
To maintain accurate carbureting through passages and discharge holes, extreme care must be taken in cleaning.
Use only carburetor solvent and compressed air to clean all passages and discharge holes. Never use wire or other pointed instrument to clean or carburetor calibration will be affected.

REMOVAL

Remove carburetor from engine, taking sufficient care to the following:

PRECAUTIONS:

a. **When disconnecting fuel lines, do not spill fuel from fuel pipe.**
b. **When removing carburetor, do not drop any nut or bolt into intake manifold.**
c. **Be careful not to bend or scratch any part.**

CLEANING AND INSPECTION

Dirt, gum, water or carbon contamination in or on exterior moving parts of a carburetor often results in unsatisfactory performance. For this reason, efficient carbureting depends upon careful cleaning and inspection while servicing.
Before assembling and installing the carburetor, blow all passages and castings with compressed air and blow off all parts until dry.
Do not pass drills or wires through calibrated jets or passages as this may enlarge orifice and seriously affect carburetor calibration.

Disassembling Carburetor Harness Connector

When replacing fuel cut solenoid valve, automatic choke heater (choke chamber assembly) or IACV-idle up control solenoid valve (mixture by-pass solenoid valve), it will be necessary to disassemble carburetor harness connector.

1. Remove rear clip.

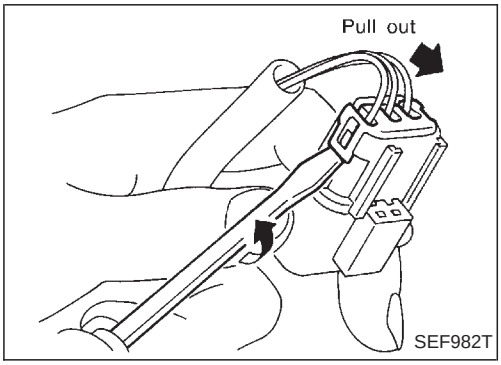

2. With a small screwdriver, tilt lock tongue and, at the same time, push out terminal.

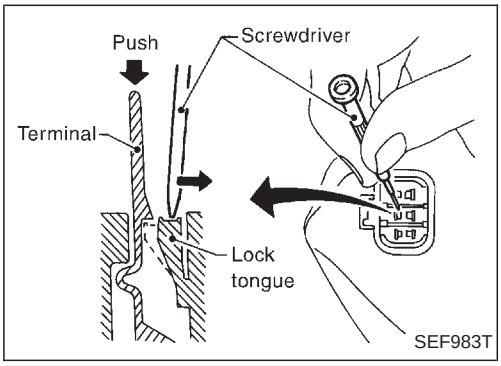

CAUTION:

- **When extracting terminal, do not pull wire harness. Always push the top of terminal.**
- **Take care not to damage seal boot at the bottom of terminal.**
- **Do not let oil or gasoline adhere to seal boot.**

Checking and Adjusting Idle Speed, Ignition Timing and Mixture Ratio

CAUTION:

- Idle mixture ratio is adjusted at factory and requires no further adjustment. If it becomes necessary to adjust it, proceed with the following steps.
- Do not attempt to screw the idle adjusting screw down completely. Doing so could cause damage to tip, which in turn will tend to cause malfunctions.
- After adjusting idle speed and mixture ratio, be sure to check items below, and if necessary, adjust them.
  (1) Fast idle adjustment
  (2) FICD adjustment

PREPARATION

1. Make sure that the following parts are in good order.
- Battery
- Ignition system
- Engine oil and coolant levels
- Fuses
- Vacuum hoses
- Air intake system
  (Oil filler cap, oil level gauge, etc.)
- Engine compression
- Throttle valve
2. On air conditioner equipped models, checks should be carried out while the air conditioner is “OFF”.
3. When measuring “CO” percentage, insert probe more than 40 cm (15.7 in) into tail pipe.
4. Turn off headlamps, heater blower, rear defogger.
5. Keep front wheels pointed straight ahead.

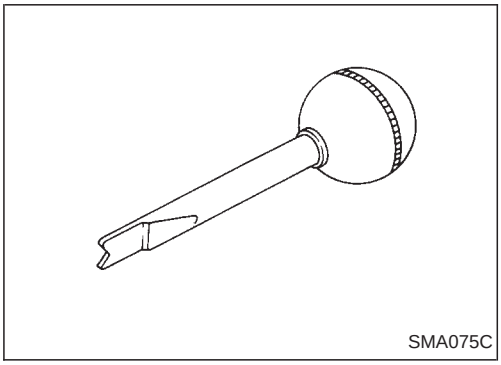

6. Use idle adjusting screwdriver (KV10108300) when adjusting idle adjusting screw.

WARNING:

Depress brake pedal while revving the engine to prevent forward surge of vehicle.

Checking and Adjusting Idle-rpm, Ignition Timing and Mixture Ratio

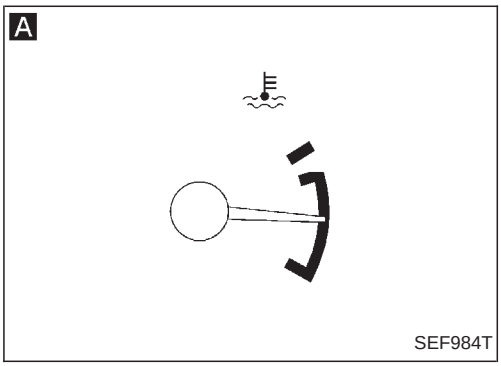

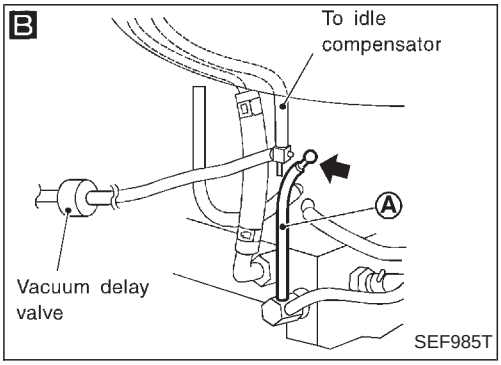

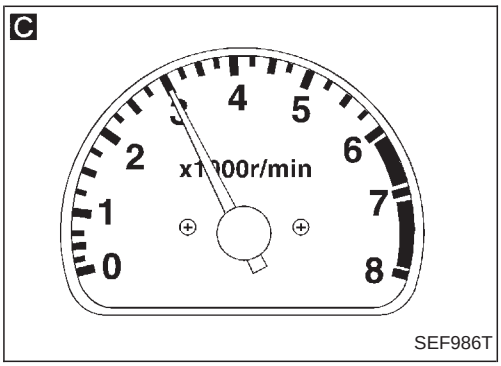

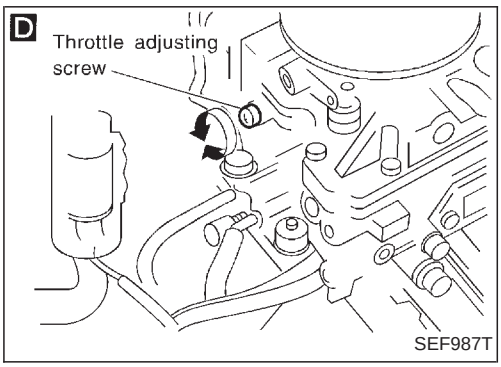

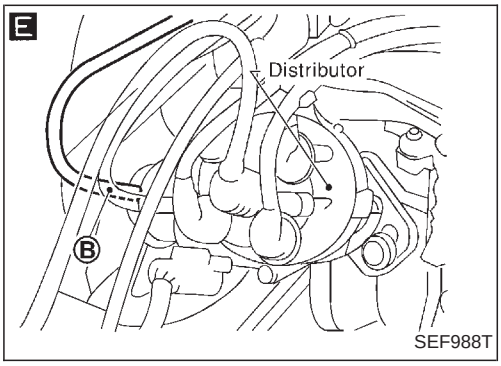

START

A

Start engine and warm it up until engine coolant temperature indicator points to normal operating temperature.

Open engine hood.

Run engine at idle speed for 2 minutes.

B

Disconnect idle compensator vacuum hose Ⓐ and install a plug on the vacuum hose. ← Ⓑ

C

Rev engine (2,000 - 3,000 rpm) 2 or 3 times under no-load, and then run engine at idle speed.

Check base idle speed.

Idle speed:
800±50 rpm

OK → E

NG → **D**

Adjust idle speed by turning throttle adjusting screw. → C

E

Disconnect distributor vacuum hose Ⓑ and install a plug on the vacuum hose.

F

Check ignition timing at idle speed.

Ignition timing: degree BTDC (in "N" position)
3±2

OK → Connect distributor vacuum hose to carburetor connector.

NG → **G**

Adjust ignition timing by turning distributor. → C

Connect distributor vacuum hose to carburetor connector.

Ⓐ

Checking and Adjusting Idle-rpm, Ignition Timing and Mixture Ratio (Cont'd)

F

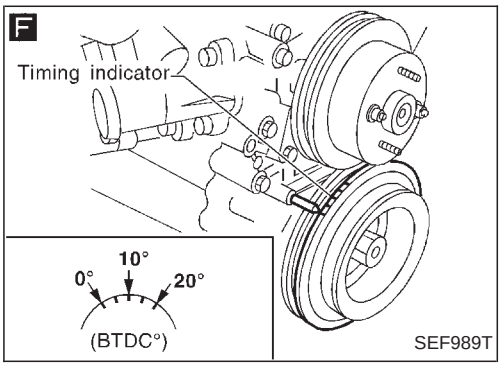

G

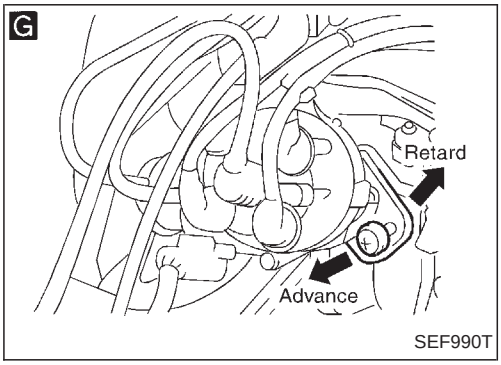

H

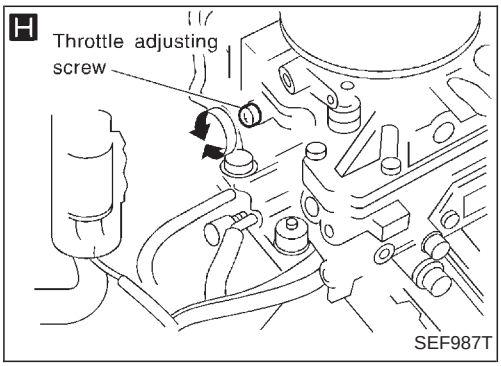

I

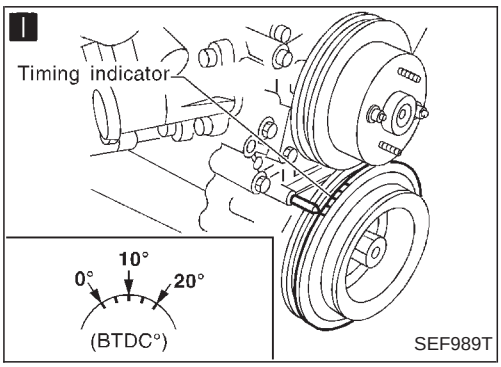

J

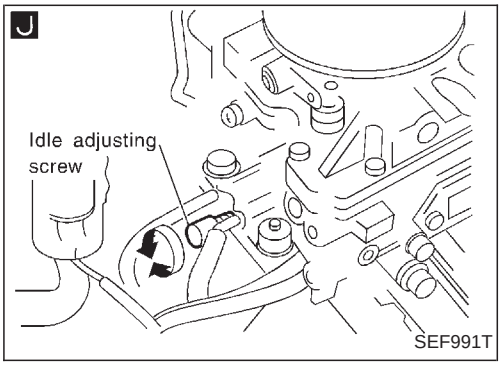

Ⓐ

Rev engine (2,000 - 3,000 rpm) 2 or 3 times under no-load, and then run engine at idle speed.

H

Adjust target idle speed by turning throttle adjusting screw.

Idle speed: rpm (in "N" position)
800±50

Clean or replace vacuum hoses.

I

Confirm ignition timing at idle speed.

Ignition timing: degree BTDC (in "N" position)
10±5

NG → Check distributor and vacuum hoses.

Repair or replace distributor or vacuum controller. → Ⓑ

OK

Without "CO"-meter. → Ⓒ

With "CO"-meter

Check "CO"% at idle speed.

Idle "CO": %
1.5±0.5

NG → J Adjust idle "CO"% to 1.5±0.5% by turning idle adjusting screw. → Ⓑ

OK

END

Checking and Adjusting Idle-rpm, Ignition Timing and Mixture Ratio (Cont'd)

K

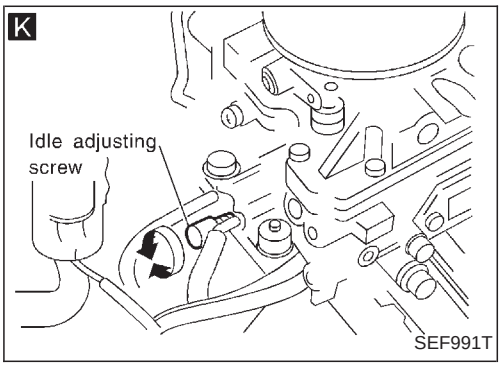

L

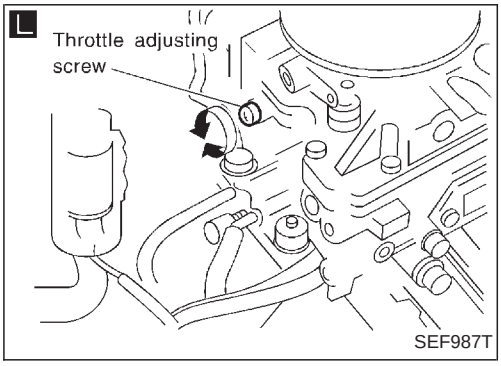

M

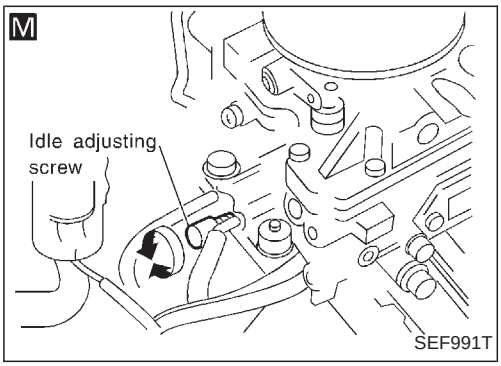

Ⓒ

K

Turn out idle adjusting screw approximately two turns, starting from fully closed position.

CAUTION:

Do not attempt to screw the idle adjusting screw down completely. Doing so could cause damage to tip, which in turn will tend to cause malfunctions.

L

Adjust engine speed by turning throttle adjusting screw.

Engine speed: rpm (in "N" position)
800±50

Turn idle adjusting screw until engine runs smoothly at highest speed.

Engine speed rises.

Engine speed does not rise.

M

Adjust engine speed by turning in idle adjusting screw.

Idle speed: rpm (in "N" position)
800±50

END

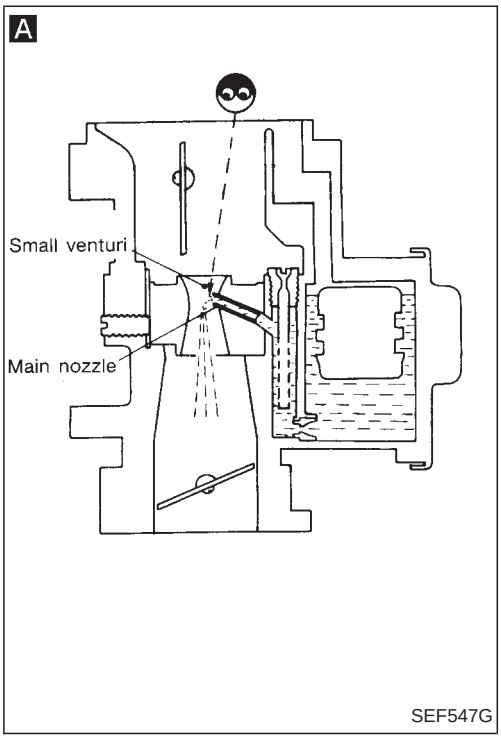

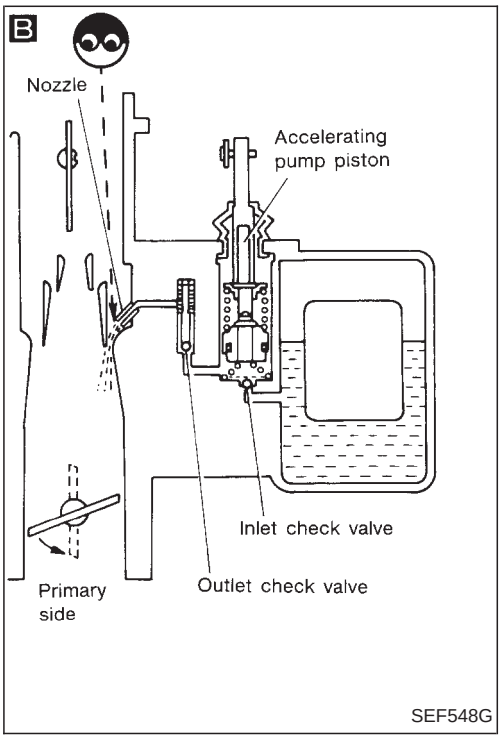

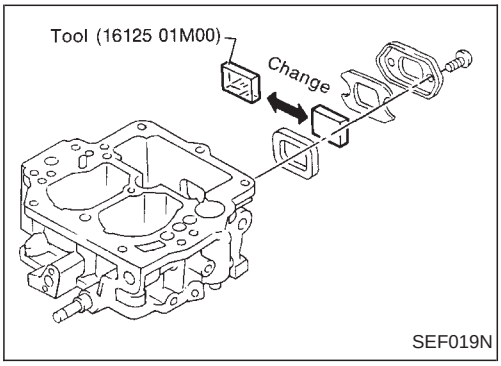

Fuel Level

INSPECTION

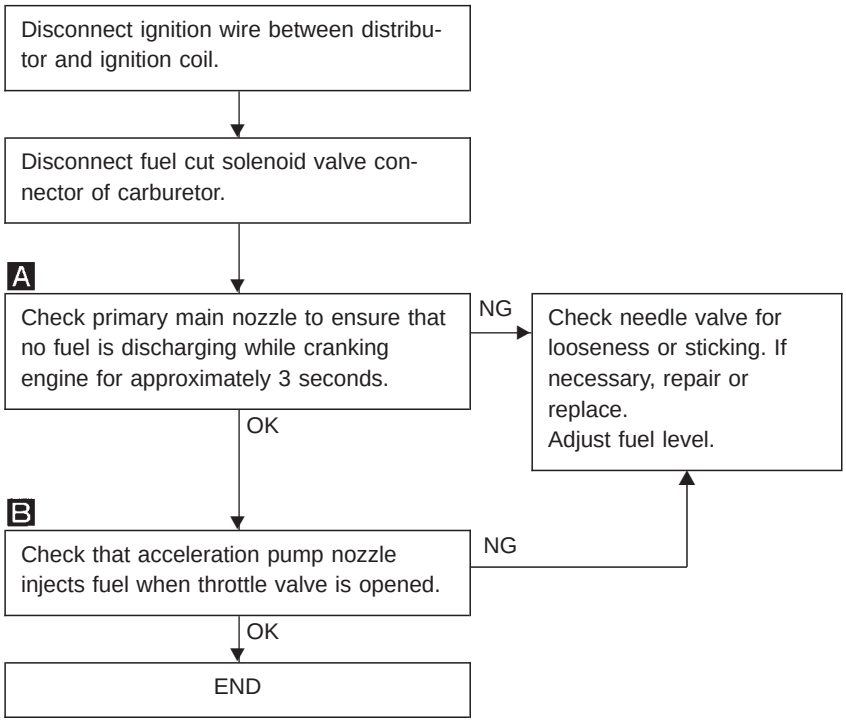

- If necessary, use Tool (16125 01M00) to visually check fuel level as follows:

1. Disconnect inlet fuel hose from carburetor, and plug opening.
2. Start engine and wait for it to stop.
3. Install Tool on carburetor, as shown.

- **Be careful not to spill fuel.**

4. Connect inlet hose to carburetor.
5. Start engine. Visually check fuel level.

- **If out of specification, adjust by bending float seat and float stopper.**

Fuel Level (Cont'd)

ADJUSTMENT

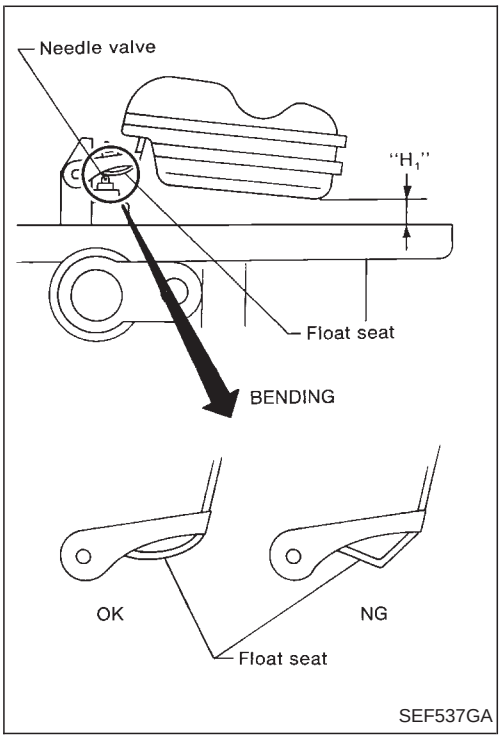

SEF537GA

1. Remove carburetor from engine.
2. Remove choke chamber from carburetor.
3. Turn choke chamber upside down, and fix it horizontally.
4. Raise float fully, then lower it slowly until float seat contacts needle valve, and in this position, check height "H_1".
   Height "H_1":
   4.8 - 5.8 mm (0.189 - 0.228 in)
- **If out of specification, adjust by bending float seat. Make sure needle valve slides smoothly on float seat.**

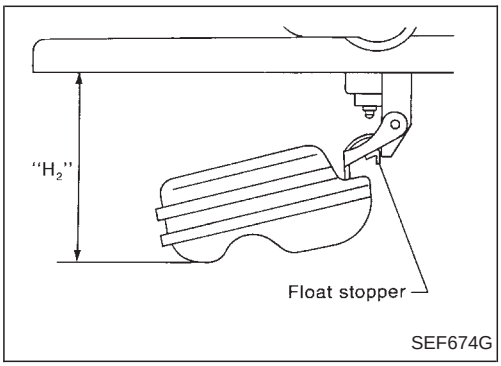

SEF674G

5. Lower float slowly until float stopper contacts carburetor, and in this position, check height "H_2".
   Height "H_2":
   47.5 - 48.5 mm (1.870 - 1.909 in)
- **If out of specification, adjust by bending float stopper.**
6. Install choke chamber and then place carburetor on engine.
7. Perform "FUEL LEVEL INSPECTION".

Automatic Choke

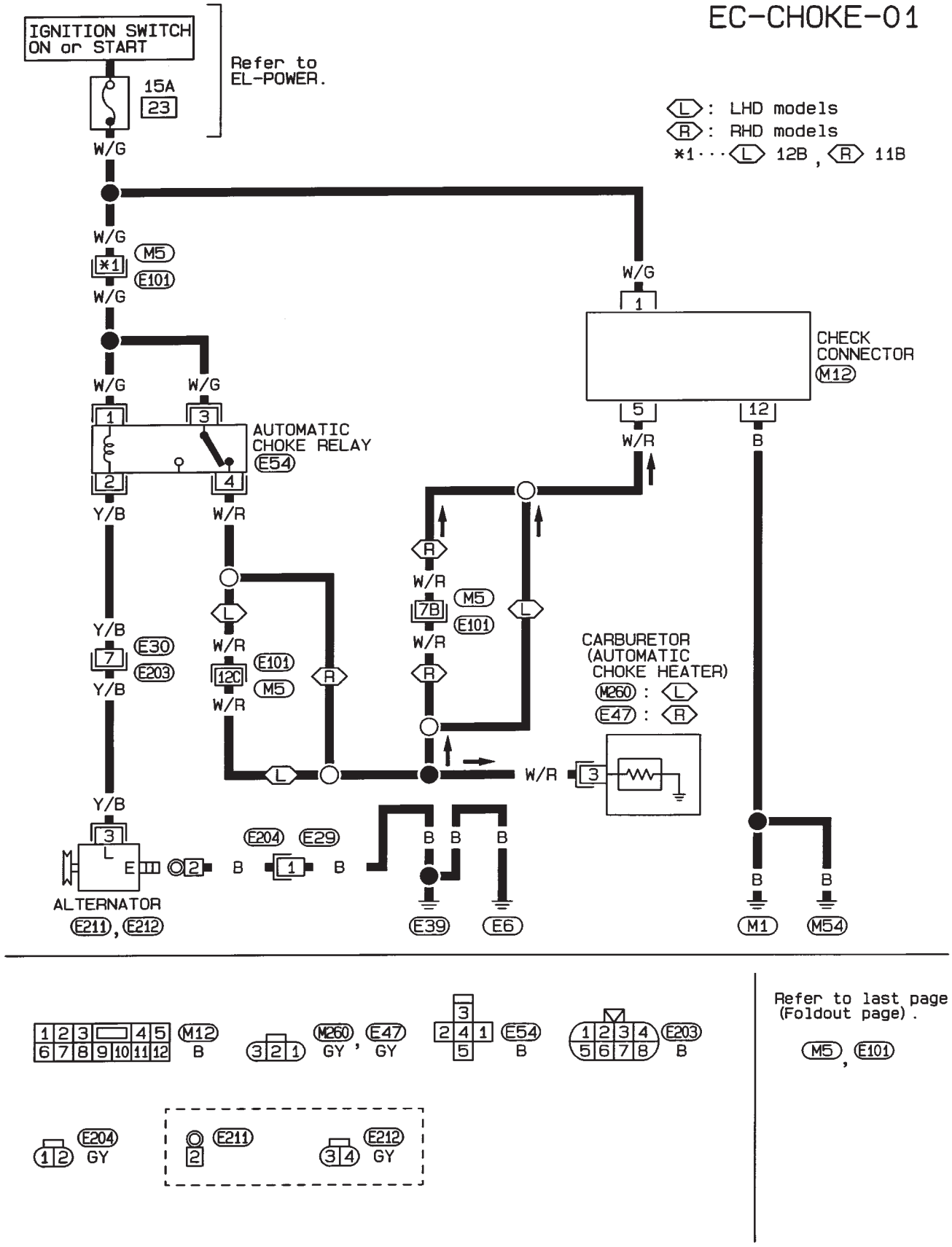

Refer to last page (Foldout page).

M5, E101

HEC375

Automatic Choke (Cont'd)

MECHANICAL CHECK

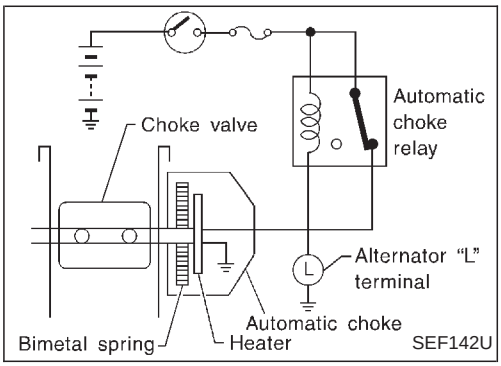

1. Before starting engine, fully open throttle valve and ensure that choke valve closes properly.
2. Push choke valve with your finger to check for smooth movement.

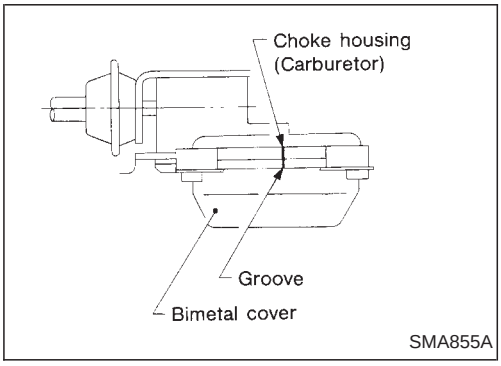

3. Make sure bimetal cover index mark is aligned with center of choke housing index mark.
4. Check wiring connection, and start engine.
5. After warming up engine, ensure that choke valve is fully open. If not, check automatic choke circuit and heater.

ENTIRE SYSTEM

Do not attach test leads of a circuit tester to those other than designated.

1. Start engine.

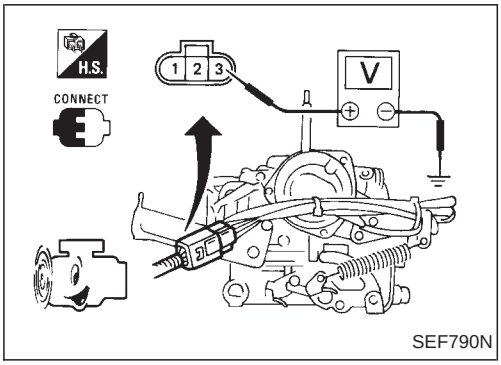

2. Check voltage between terminal ③ and ground, with engine running.
   Voltage: Approximately 9 - 12V
   If no voltage appears, check the following items.
   - Automatic choke circuit
   - Automatic choke relay
   - Automatic choke heater

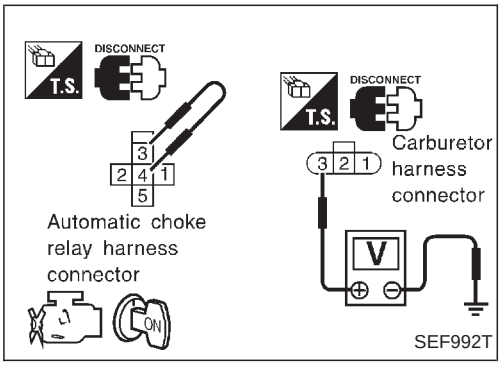

AUTOMATIC CHOKE CIRCUIT

1. Disconnect automatic choke relay and then connect a suitable jumper wire between terminals ③ and ④ .
2. Disconnect carburetor harness connector.
3. Turn ignition switch "ON".
4. Check voltage between carburetor harness connector terminal ③ and body ground.
   Voltage: Battery voltage
   If NG, check or repair the harness.

Automatic Choke (Cont'd)

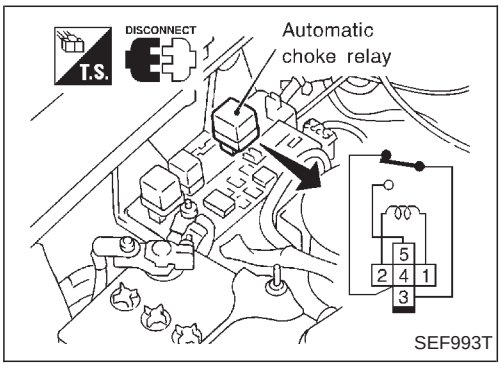

SEF993T

AUTOMATIC CHOKE RELAY

Check continuity between terminals ③ and ④.

Conditions	Continuity
12V direct current supply between terminals ① and ②	No
No current supply	Yes

If NG, replace relay.

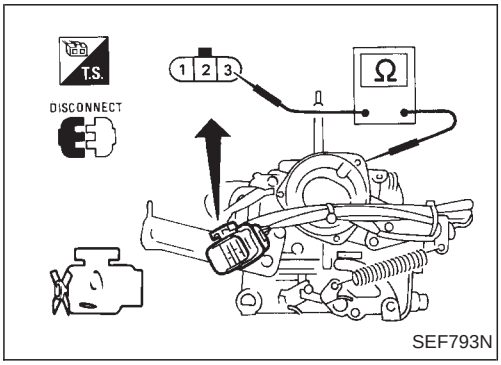

SEF793N

AUTOMATIC CHOKE HEATER

1. Disconnect carburetor harness connector.
2. Check continuity between choke heater connector terminal ③ and choke housing.

- **Continuity should exist.**

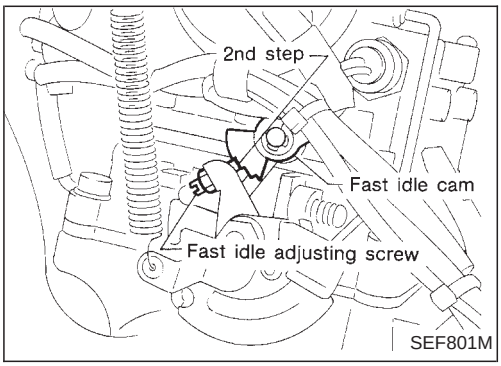

SEF801M

Fast Idle

1. Warm up engine.
2. Set fast idle arm on 2nd step of fast idle cam.
3. Check fast idle speed.

   Fast idle speed (at 2nd cam step):
   2,500±100 rpm

- **Make sure that engine is completely adjusted (idle speed, ignition timing, etc.) before checking or adjusting fast idle speed.**

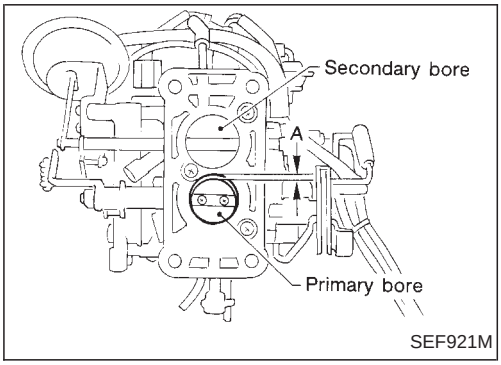

SEF921M

4. If out of specification, remove carburetor and make fast idle adjustments as follows:

1) Place fast idle arm on 2nd step of fast idle cam, in the same manner as in step 2. above.
2) Adjust clearance "A" between primary throttle valve and inner carburetor wall by turning fast idle adjusting screw.

   Clearance "A":
   0.69±0.07 mm (0.0272±0.0028 in)

5. After adjusting clearance "A", install carburetor on engine and check engine speed.

- **Following installation, do not attempt further adjustment of clearance "A" even if fast idle speed is incorrect.**

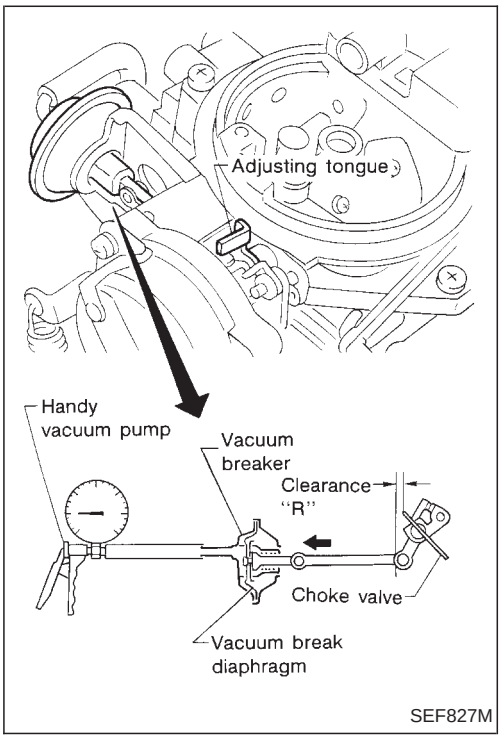

SEF827M

Vacuum Break

1. When engine is cold, close choke valve completely.
2. Apply vacuum to vacuum break diaphragm with a handy vacuum pump.
   Approximately −53.3 kPa
   (−533 mbar, −400 mmHg, −15.75 inHg)

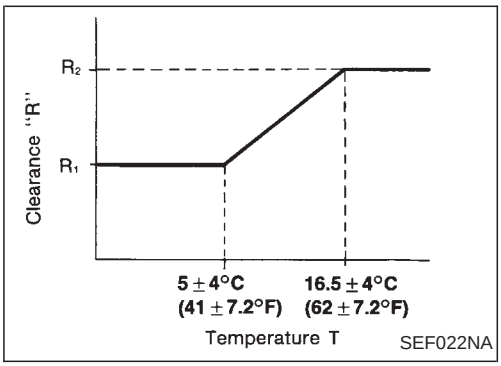

SEF022NA

3. In this condition, check clearance "R" between choke valve and carburetor body.

Temperature °C (°F)	Clearance R mm (in)	
Below 5±4 (41±7.2)	R_1	1.72±0.16 (0.0677±0.0063)
Above 16.5±4 (62±7.2)	R_2	2.68±0.3 (0.1055±0.0118)

4. If out of specification, adjust "R" by bending tongue.

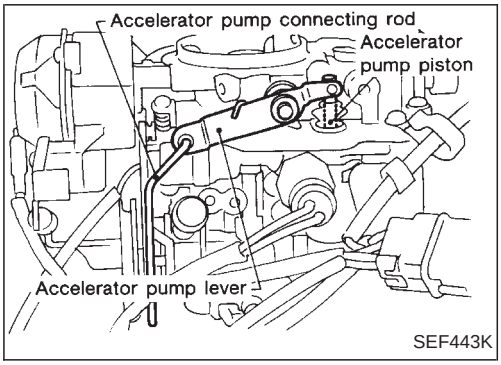

SEF443K

Accelerator Pump

1. With engine stopped, make a visual check of the accelerator pump connecting rod and lever.
- If they are bent or twisted, replace them.

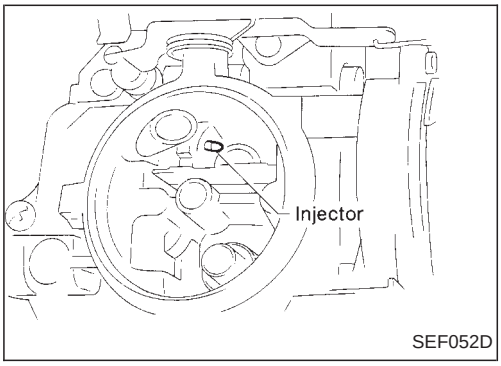

SEF052D

2. Turn the throttle lever and make sure that fuel is smoothly injected from the injector located in the primary port.
- If the accelerator pump is not functioning properly, check the pump piston.
  Replace it if necessary.

IACV-idle up Control

LHD MODELS

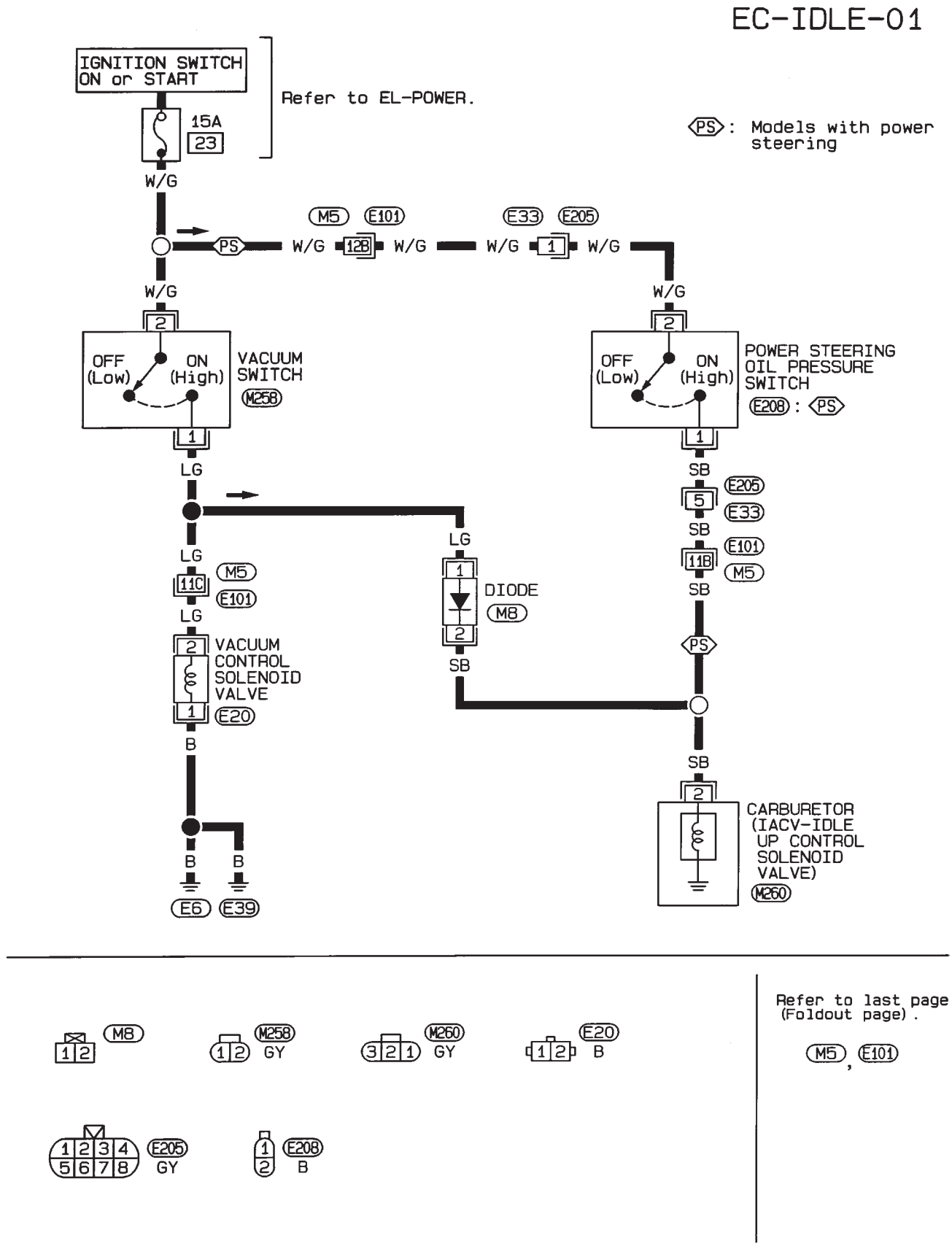

HEC376

IACV-idle up Control (Cont'd)

RHD MODELS

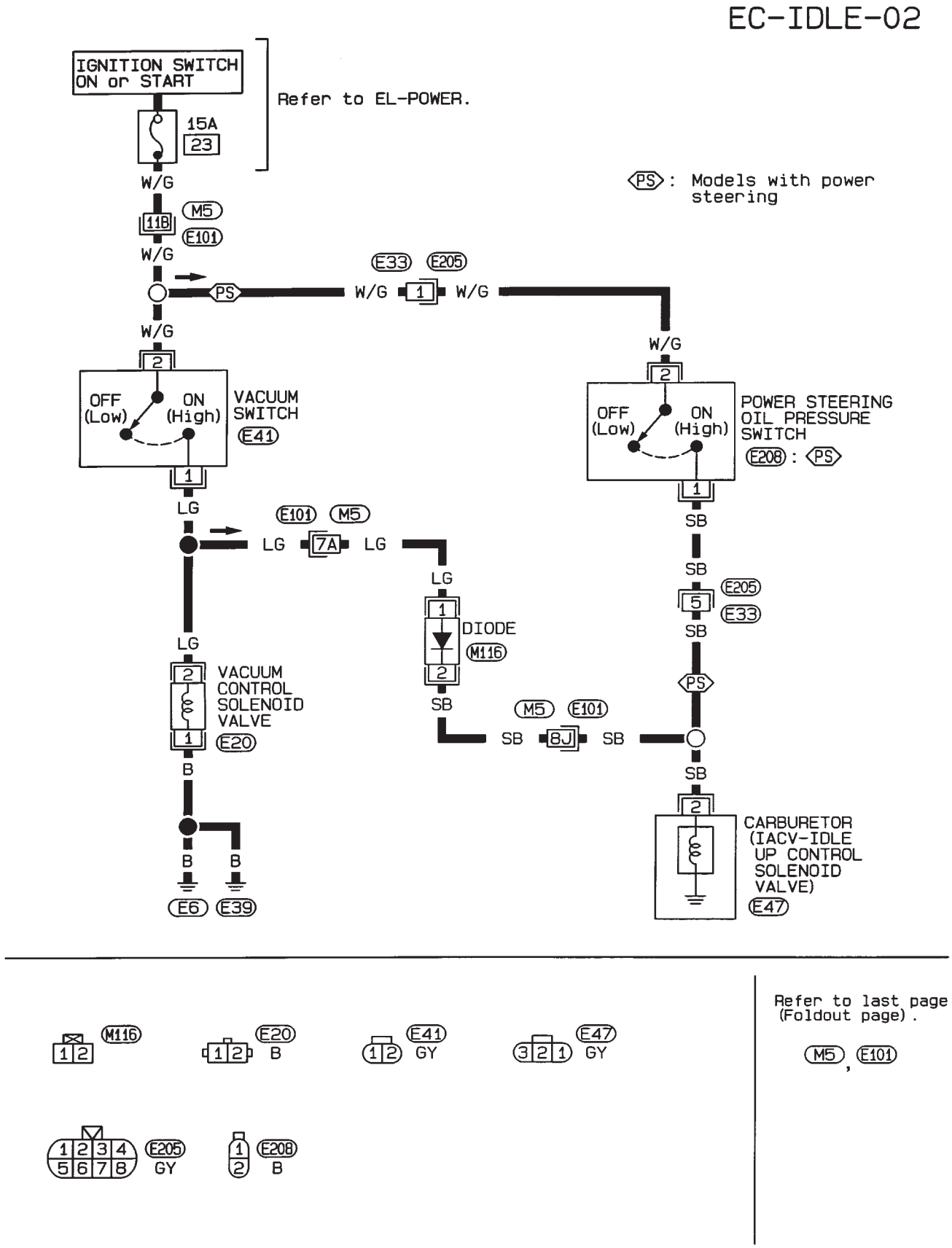

Refer to last page (Foldout page).

M5, E101

IACV-idle up Control (Cont'd)

This system prevents erratic idling when power steering is operating.
In this system, the proper fuel and air mixture is added when solenoid valve attached to carburetor is in the "ON" position.

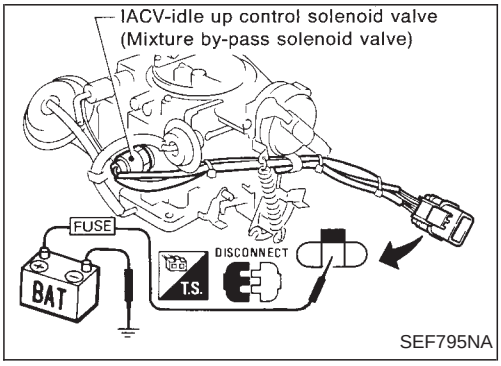

INSPECTION

IACV-idle up control solenoid valve (Mixture by-pass solenoid valve)

1. Connect solenoid valve connector to battery.
2. Check "click" sound from solenoid valve when battery is connected and disconnected.
3. If no sound is heard from solenoid valve, replace with a new one.

1) Disconnect harness from harness connector.
2) Remove solenoid valve from carburetor.
3) Install new solenoid valve. After replacement, check that solenoid valve is in good condition.

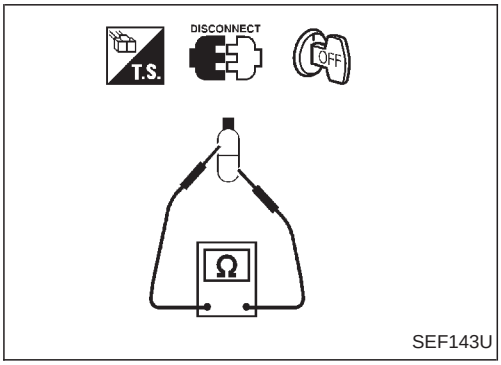

Power steering oil pressure switch

1. Disconnect power steering oil pressure switch harness connector.
2. With engine running, check continuity between terminals.

Condition	Continuity
Steering wheel being turned	Yes
Steering wheel not being turned	No

If NG, replace power steering oil pressure switch.

Fuel Cut Control System

EC-FCUT-01

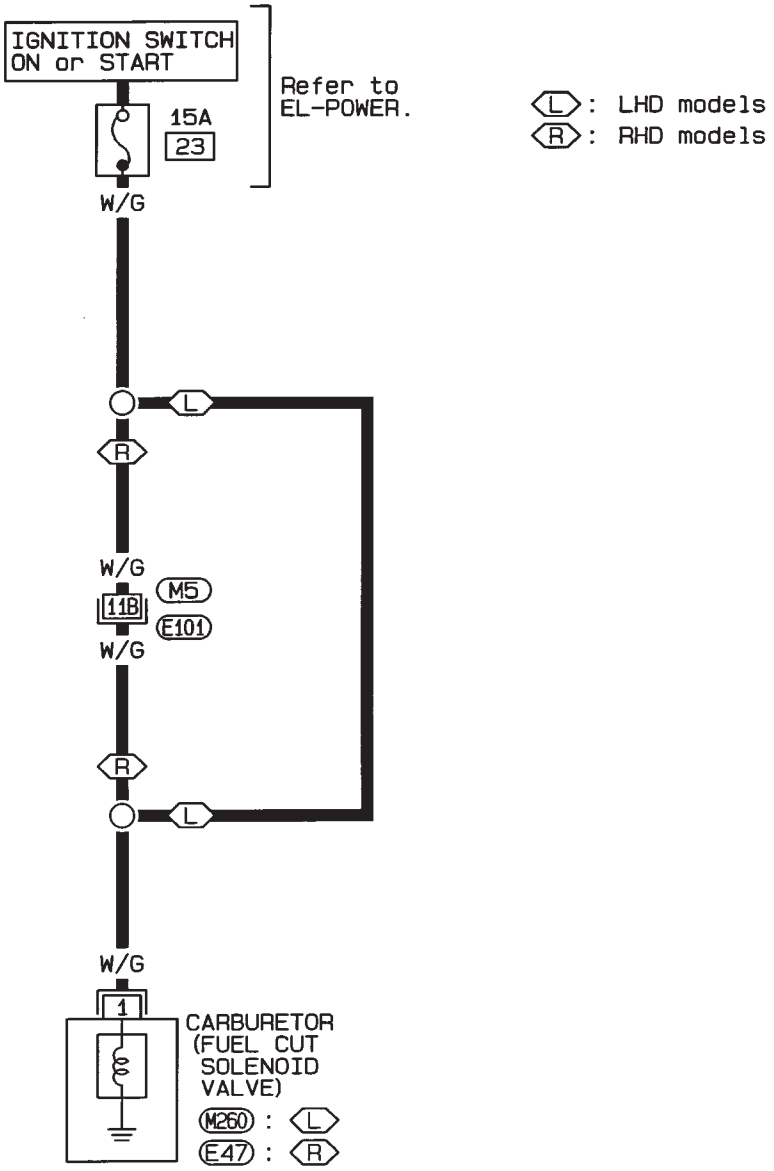

Refer to last page
(Foldout page).

M5, E101

HEC378

Fuel Cut Control System (Cont'd)

INSPECTION

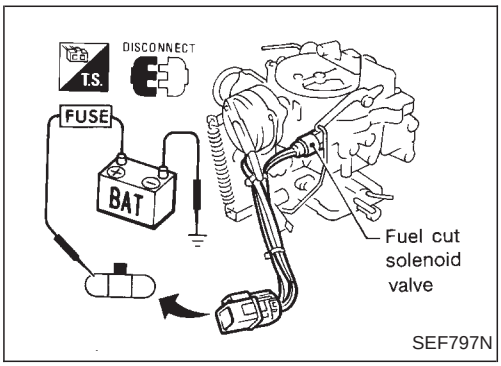

Fuel cut solenoid valve

1. Connect solenoid valve connector to battery.
2. Check "click" sound from solenoid valve when battery is connected and disconnected.
3. If no sound is heard from fuel cut solenoid valve, replace with a new one.

1) Disconnect harness from harness connector.
2) Remove fuel cut solenoid valve from carburetor.
3) Install new fuel cut solenoid valve.

- **After replacement, start engine and check that fuel cut solenoid is in good condition.**

Mixture By-pass Control System

LHD MODELS

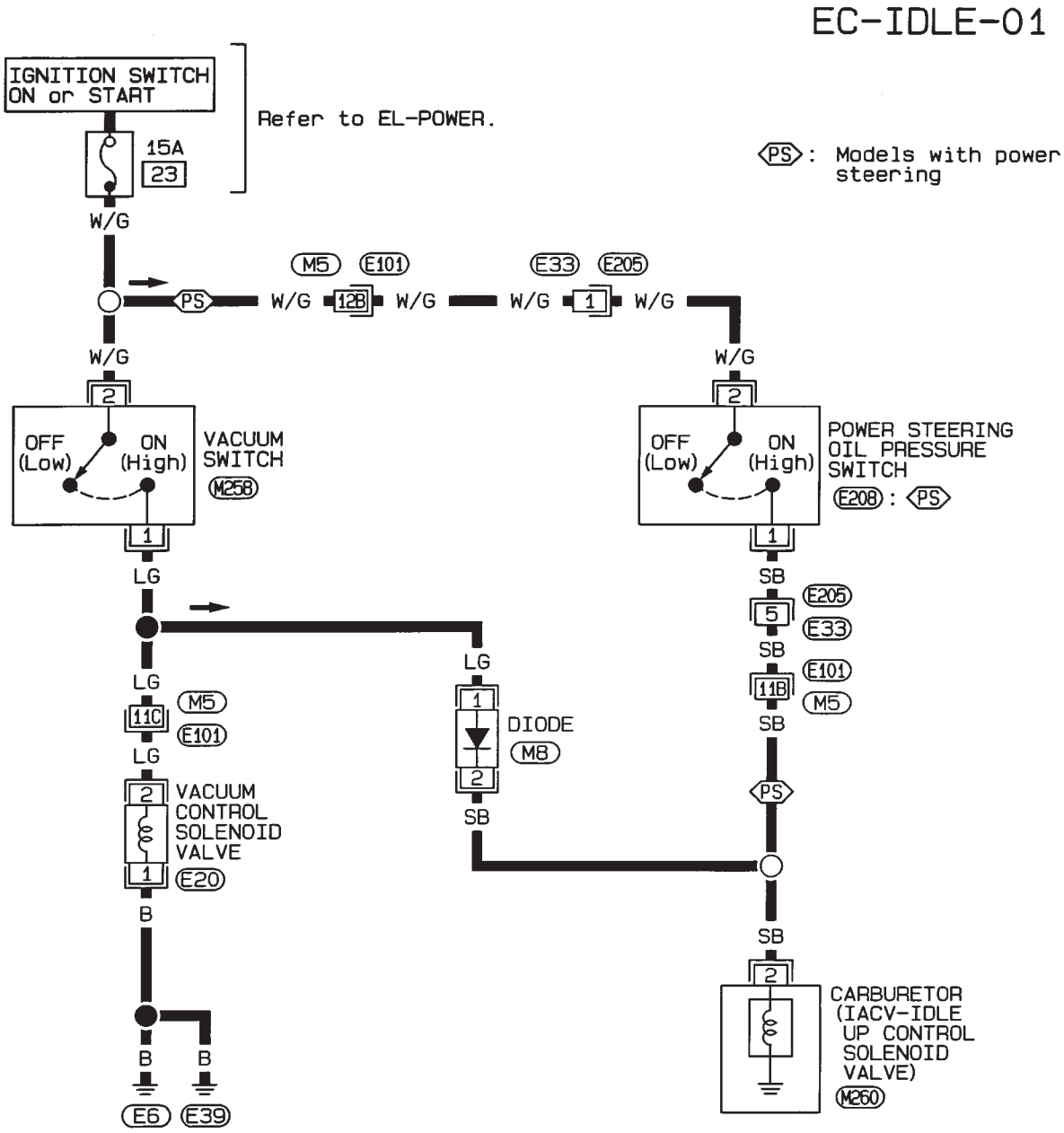

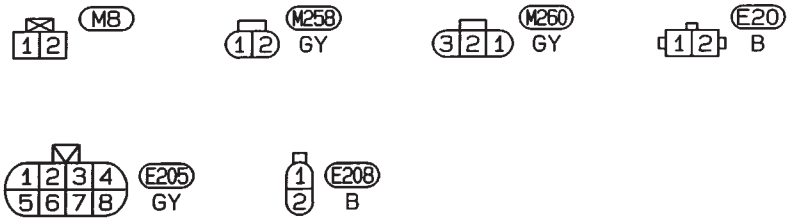

Refer to last page (Foldout page).

M5, E101

HEC376

Mixture By-pass Control System (Cont'd)

RHD MODELS

EC-IDLE-02

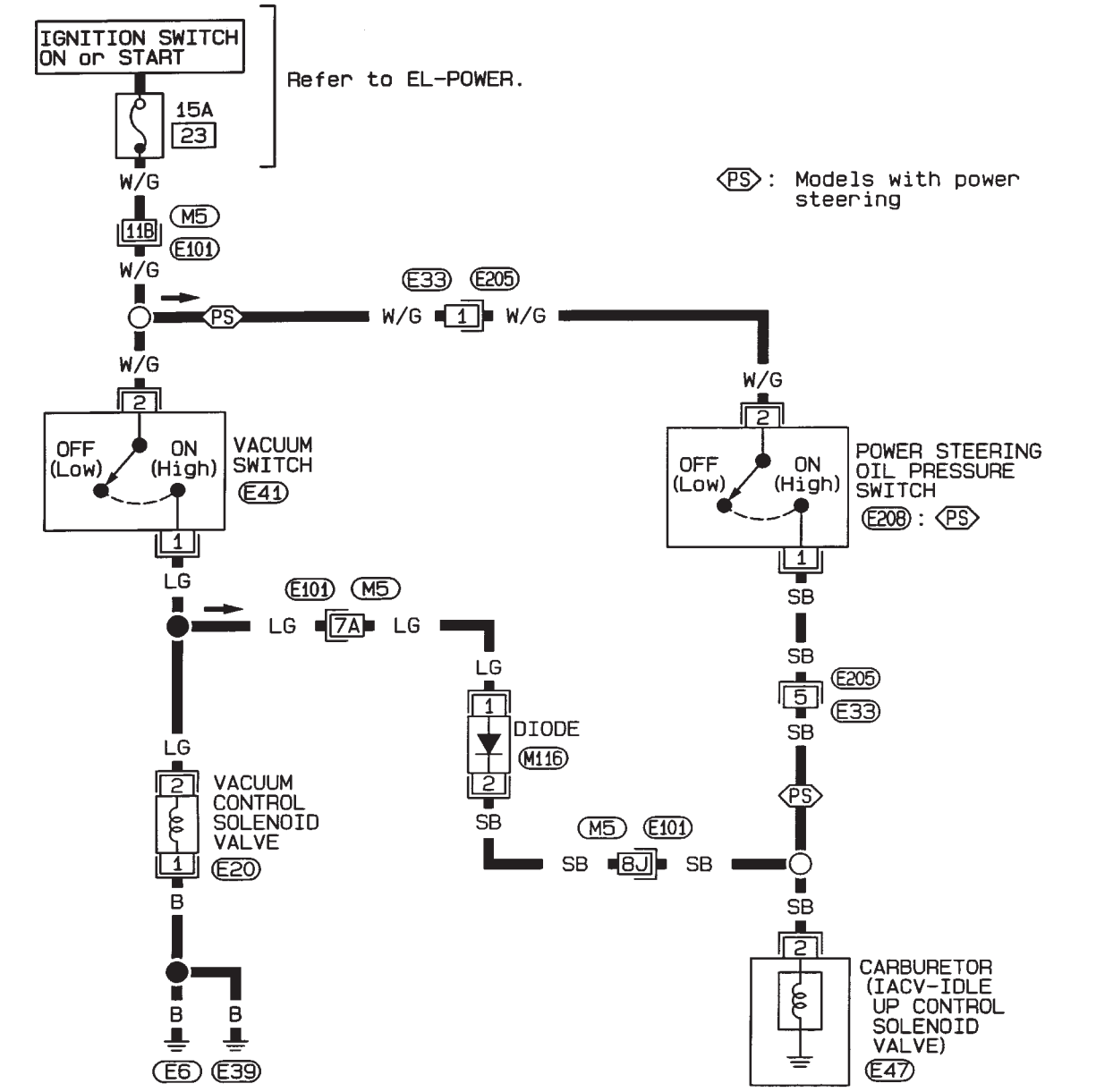

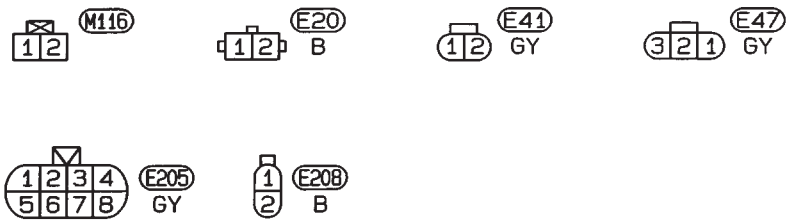

Refer to last page (Foldout page).

M5, E101

HEC377

Mixture By-pass Control System (Cont'd)

DESCRIPTION

The mixture by-pass control system is designed to prevent after burn during deceleration.
When IACV-idle up control solenoid valve is on, additional mixture gas is supplied.

Vacuum switch	Intake manifold vacuum −kPa (−mbar, −mmHg, −inHg)	Mixture by-pass control system
ON	Below 80.0 (800, 600, 23.62)	Operates.
OFF	Above 83.0 (830, 623, 24.53)	Does not operate.

INSPECTION

IACV-idle up control solenoid valve

Refer to "IACV-idle up Control System", EC-190.

Vacuum switch

Refer to "Component Parts Inspection", "IGNITION CONTROL SYSTEM", EC-210.

ISC-FI Pot

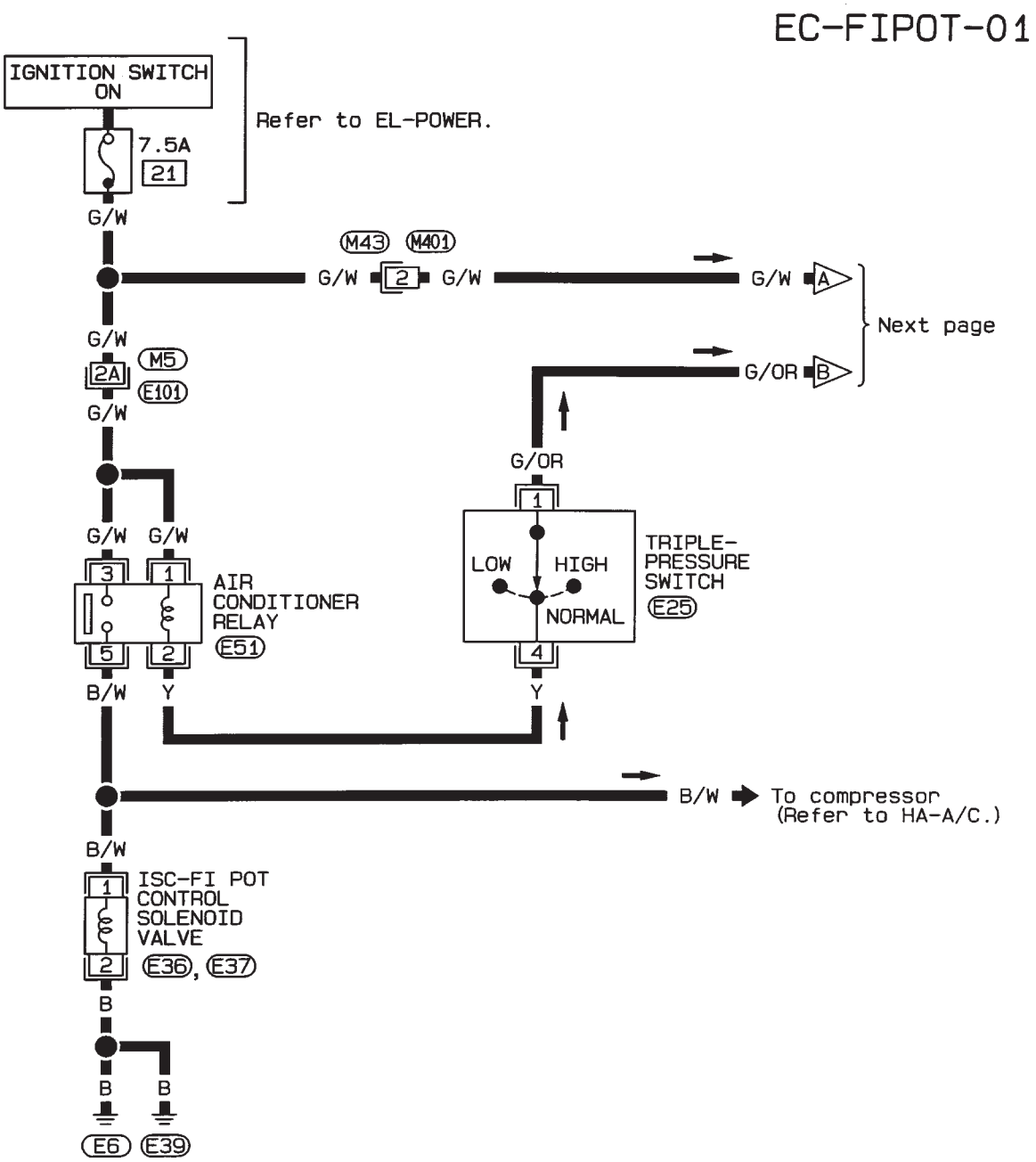

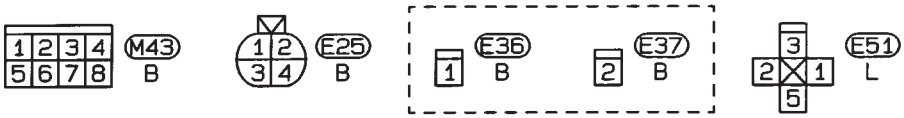

Refer to last page (Foldout page).

M5, E101

HEC398

ISC-FI Pot (Cont'd)

EC-FIPOT-02

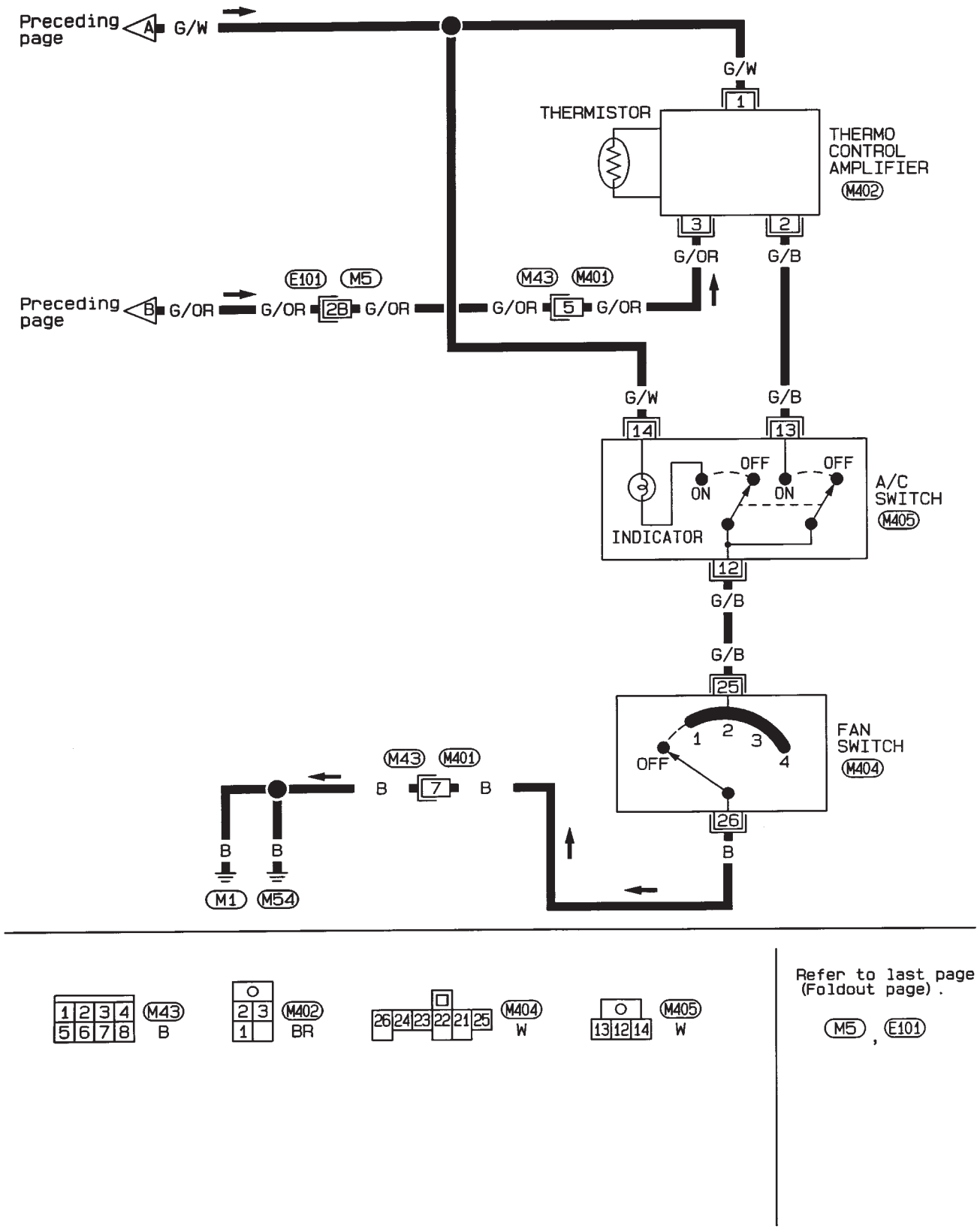

Refer to last page (Foldout page).

M5, E101

HEC399

GI
MA
EM
LC
EC
FE
CL
MT
TF
PD
FA
RA
BR
ST
RS
BT
HA
EL
IDX

ISC-FI Pot (Cont'd)

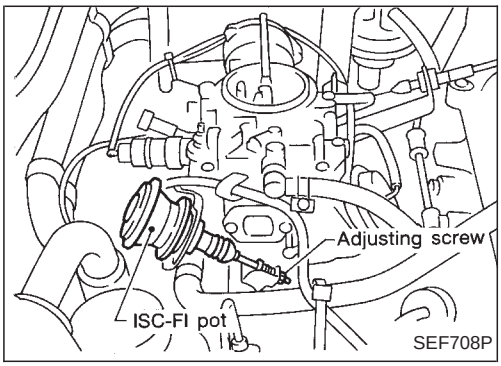

INSPECTION

1. Engine idle speed and mixture must be set properly and engine warmed up sufficiently.
2. Turn throttle valve by hand, and read engine speed when ISC-FI pot just touches stopper lever.
   ISC-FI pot touch speed:
   1,500±200 rpm
3. If out of specifications, adjust it by turning adjusting screw.
4. After adjusting, make sure that engine speed drops smoothly from 2,000 to 1,000 rpm in approximately three seconds.

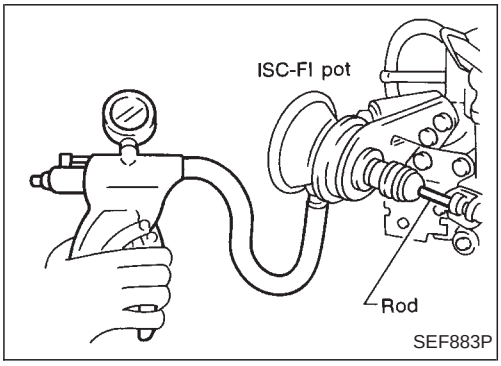

ISC-FI POT

Apply vacuum to ISC-FI pot with a handy vacuum pump.
Rod of ISC-FI pot should pull out.

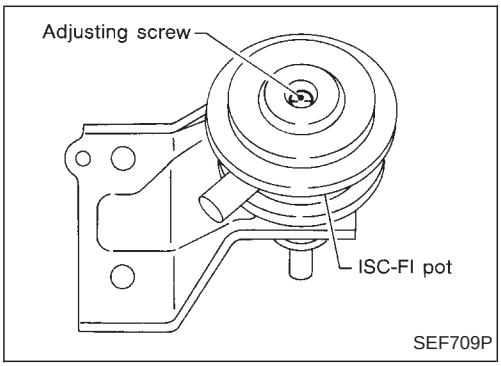

ISC-FI POT ACTUATOR

1. Warm up engine sufficiently.
2. Check idle speed and mixture ratio.
   Idle speed: rpm (in "N" position)
   800±50
   Idle "CO":
   1.5±0.5%
3. Turn air conditioner switch "ON", and check idle speed.
   Idle speed: rpm (in "N" position)
   850±50
4. If out of specification, adjust idle speed by turning adjusting screw.

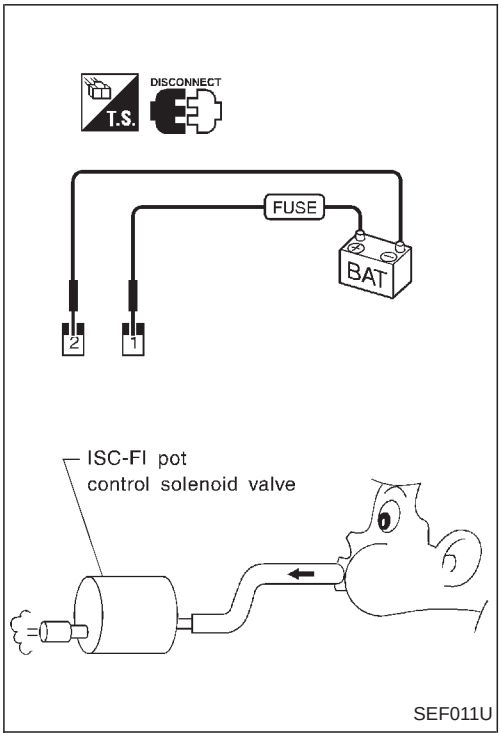

ISC-FI POT CONTROL SOLENOID VALVE

1. Disconnect ISC-FI pot control solenoid valve harness connectors and vacuum hoses.
2. Connect solenoid valve connector to battery and adequate vacuum hoses to the solenoid valve as shown in the figure.
3. Blow air into hose.
   If air flows: OK
   If air does not flow: NG
   If NG, replace ISC-FI pot control solenoid valve.

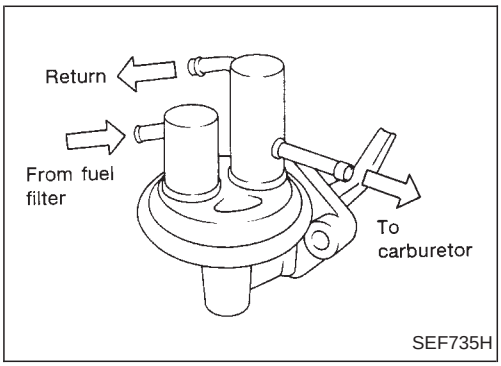

Fuel Pump

The fuel pump is a mechanical type and is mounted on the cylinder head. The end of the pump lever rests on the camshaft. When the camshaft rotates, the lever moves in a reciprocating motion to deliver fuel from the fuel tank to the carburetor.

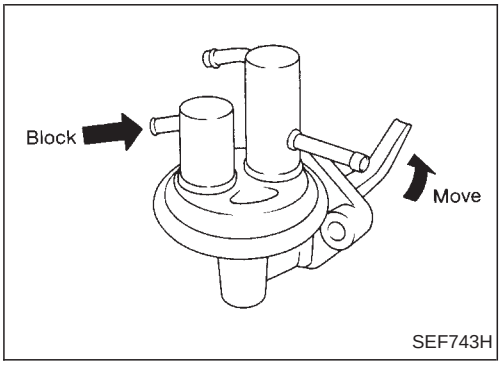

Operation

1. Flush pump by immersing it in a fuel bath and operating rocker arm several times.
2. Drain fuel from fuel pump. Then block off the inlet port and check that pump arm does not move.
3. Remove your finger from the inlet port and listen for a suction sound which will confirm that sufficient suction was produced.

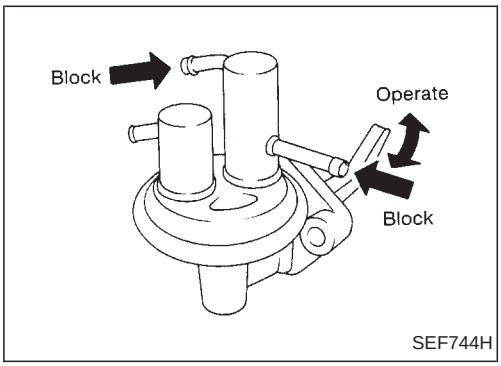

4. Block off outlet port and return port. Once again operate rocker arm. After air pressure has been built up, confirm that pressure remains for two or three seconds after.
5. Put a finger over outlet port and again build up pressure in pump. Then submerse pump in a fuel bath and check for air leaks.

WARNING:

Before starting to work on any part of fuel system, disconnect ground cable from battery. When disconnecting fuel hoses, use a container to catch fuel remaining in hoses.

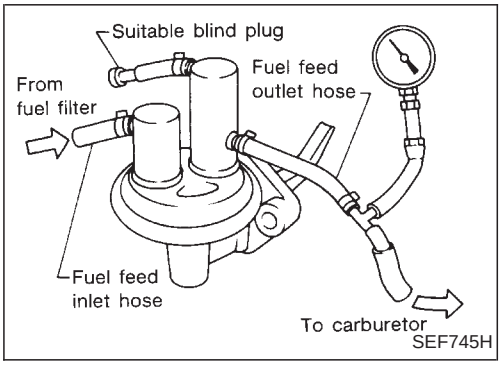

Fuel Pressure

1. Disconnect fuel return hose and plug with a suitable blind plug.
2. Disconnect fuel feed outlet hose and connect fuel pressure gauge between fuel pump and carburetor.
3. Check fuel pressure with engine running at various speeds.

   Fuel pressure:

   19.6 - 26.5 kPa

   (0.196 - 0.265 bar, 0.20 - 0.27 kg/cm^2, 2.8 - 3.8 psi)

   If out of specification, check for fuel filter clogging or improper fuel pump operation.

Description

Electric fuel pump is controlled by fuel pump control module. This module drives electric fuel pump in response to the signals from alternator “L” terminal, ignition switch and oil pressure switch.

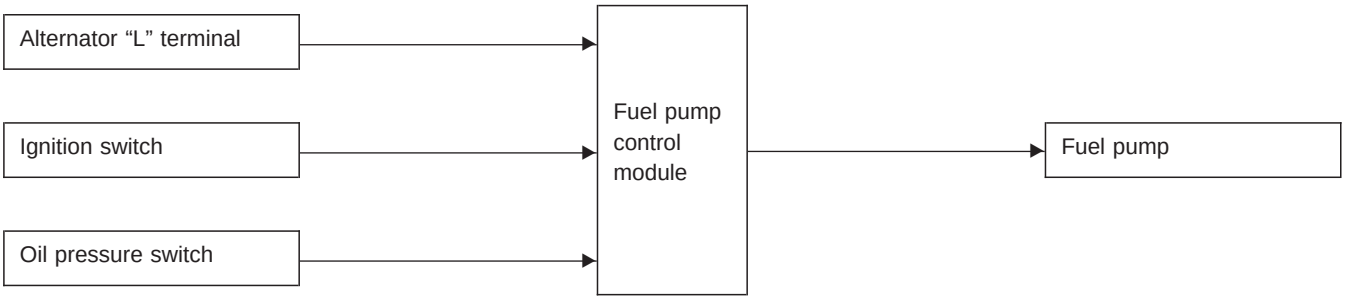

Operation

Ignition switch position	Engine	Alternator	Oil pressure	Fuel pump
OFF	Stopped	Not generating	No pressure	Not operating
ACC				
ON				
START	Cranking		Low pressure	Operating
		Generating		
		Not generating	Normal	
		Generating		
ON	Running	Failure		
		Generating	Failure	

Wiring Diagram — FPCM —

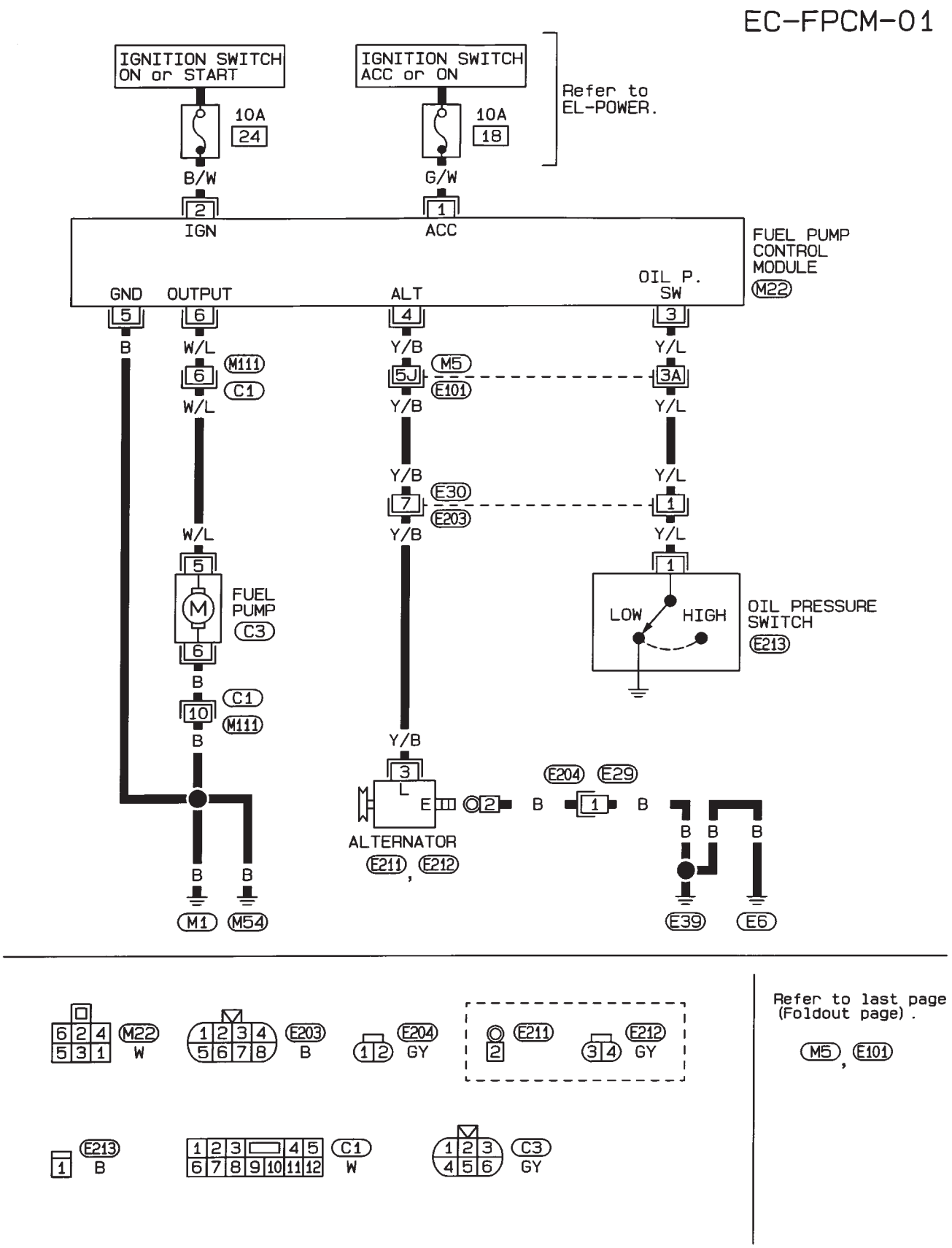

HEC381

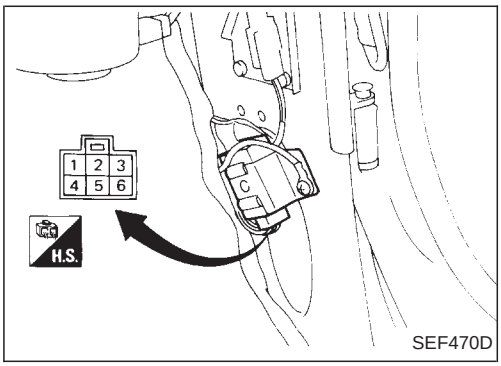

Inspection

FUEL PUMP CONTROL MODULE

Fuel pump control module is located under the right side of dash panel.
Check input signals in each terminal of fuel pump control module, following the table shown below.

INPUT SIGNAL CHECK

Check terminals			Condition	Circuit tester	
	+	−		Range	Reading
Ground	⑥	Body earth	—	Ω	0Ω
Battery (ON or START)	②		Ignition switch “ON”	V	Battery voltage
			Ignition switch “START*”		
Battery (ACC or ON)	④		Ignition switch “ON”		
			Ignition switch “START*”		0V
Alternator “L” terminal	①		Engine running		Battery voltage
			Engine stopped		0V
Oil pressure switch	⑤		Engine running		Battery voltage
			Engine stopped		0V

*: Disconnect starter motor “S” terminal before turning ignition switch “START”.

If NG, check harness continuity between fuel pump control module and each component, or check each component individually. If OK, perform fuel pump control module check.

FUEL PUMP CONTROL MODULE CHECK

- **First, disconnect starter motor “S” terminal.**
- **This check should be performed without starting engine.**

Step	Condition			Output voltage of terminal ③
	Alternator “L” terminal	Oil pressure switch terminal	Ignition switch	
1	Connected	Connected	OFF	0V
2			ACC	
3			ON	
4			START	Battery voltage
5	Disconnected		ON	
6			START	
7		Disconnected	ON	
8			START	
9	Connected		ON	
10			START	

If NG, replace fuel pump control module.

Inspection (Cont'd)

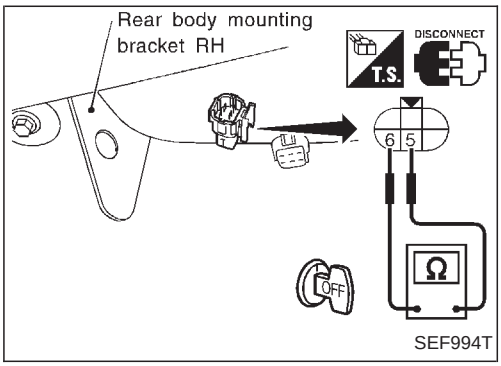

FUEL PUMP

1) Make sure that ignition switch is "OFF".
2) Disconnect fuel pump harness connector.
3) Check resistance between fuel pump connector terminals ⑤ and ⑥ .

Resistance: Approximately 0.2 - 5Ω

FUEL PRESSURE CHECK

WARNING:

- **Keep flammables away during the test.**
- **For safety, the test must be completed in as short a time as possible.**

1. Connect a suitable fuel pressure gauge.
2. Check fuel pressure.

Fuel pressure (Approximately):
17.7 - 23.5 kPa (0.177 - 0.235 bar,
0.18 - 0.24 kg/cm^2, 2.6 - 3.4 psi)

If out of specification, check for fuel filter clogging or improper fuel pump operation.

Wiring Diagram — F/RTN —

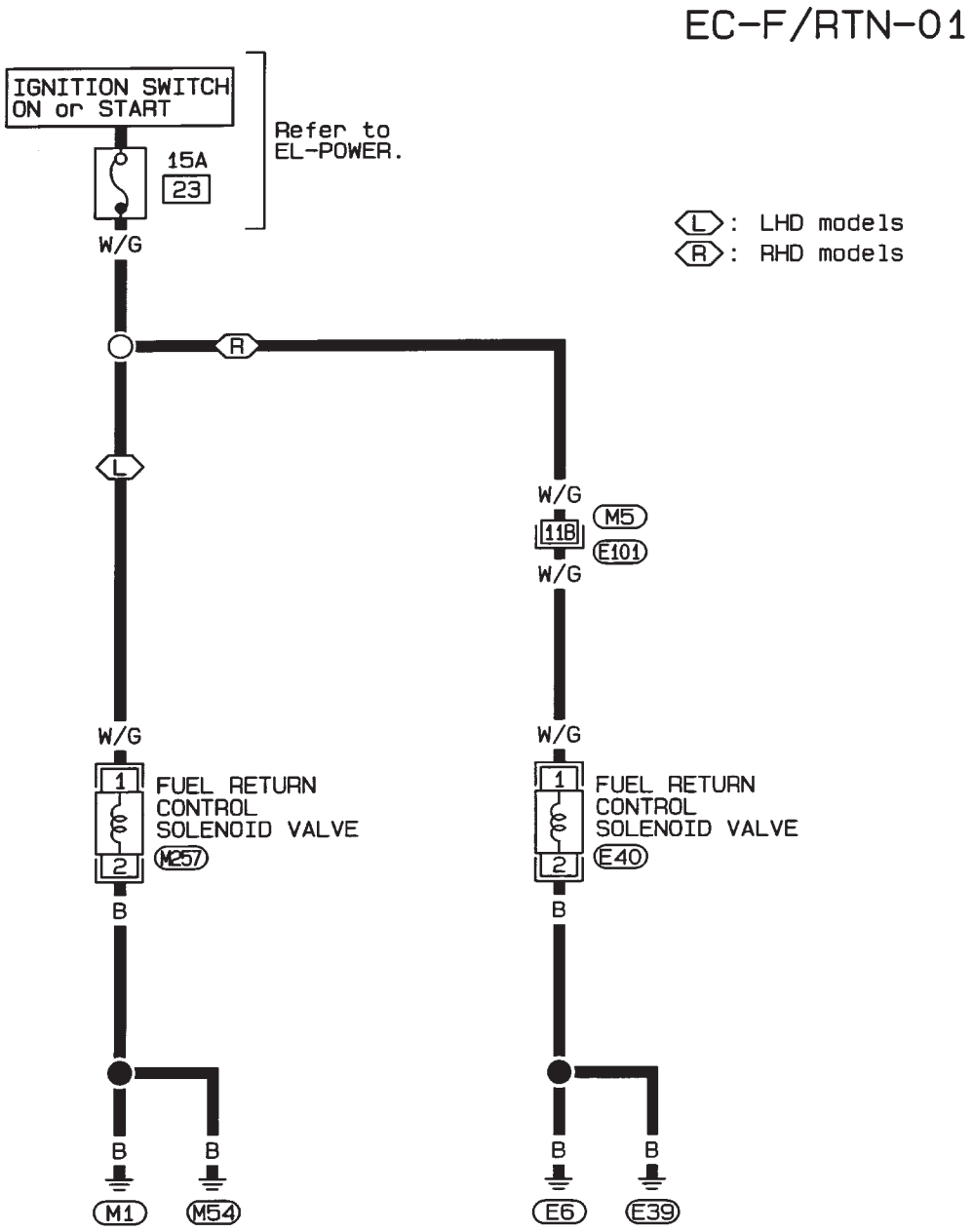

Refer to last page (Foldout page).

1 2 M257 BR, E40 BR

M5, E101

HEC379

Description

The fuel return control solenoid valve is designed to improve startability of the engine under high temperatures. Fuel vapor in the fuel return hose is prevented from entering the carburetor float chamber when ignition switch is OFF.

Operation

Ignition switch	Fuel return control solenoid valve	Fuel return passage
ON	ON	Open
OFF	OFF	Close

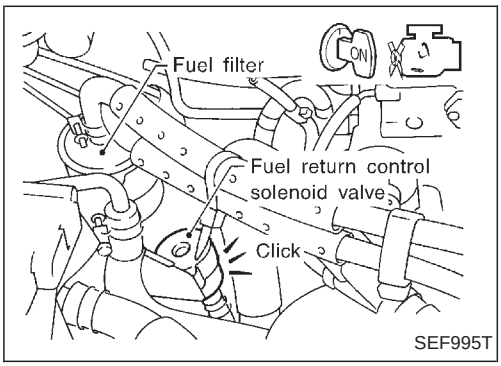

SEF995T

Inspection

1. Listen for “click” sound from solenoid valve when ignition switch is turned “ON”.
2. If no sound is heard from solenoid valve, check the following items.

- Fuel return control circuit
- Fuel return control solenoid valve
- Fuse

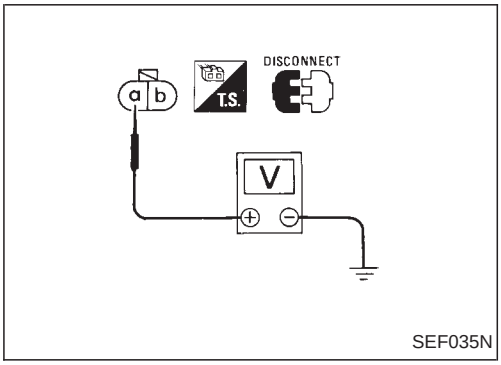

SEF035N

FUEL RETURN CONTROL CIRCUIT

Power supply circuit

1. Disconnect fuel return control solenoid valve harness connector.
2. Check voltage between terminal ⓐ and ground.

Ignition switch	Voltage between terminal ⓐ and ground
ON	Battery voltage
OFF	0V

If NG, repair harness.

Inspection (Cont'd)

Ground circuit

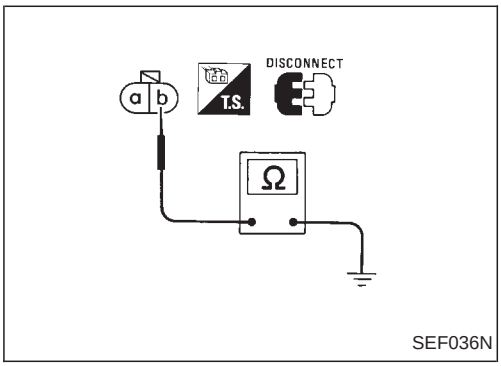

Check continuity between fuel return control solenoid valve terminal ⓑ and ground.

Continuity should exist.

If NG, repair harness.

FUEL RETURN CONTROL SOLENOID VALVE

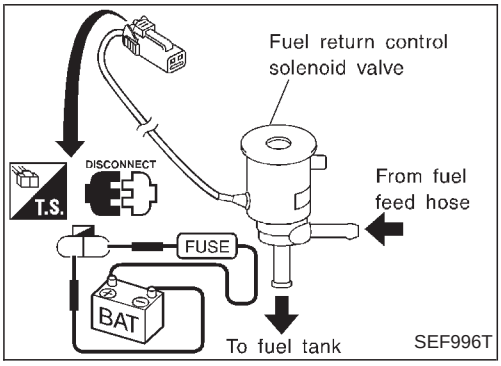

1. Disconnect fuel return control solenoid valve.
2. Connect solenoid valve connector to battery.
3. Listen for "click" sound from solenoid valve when battery is connected and disconnected.
4. If no sound is heard from solenoid valve, replace with a new one.

Wiring Diagram — IGN —

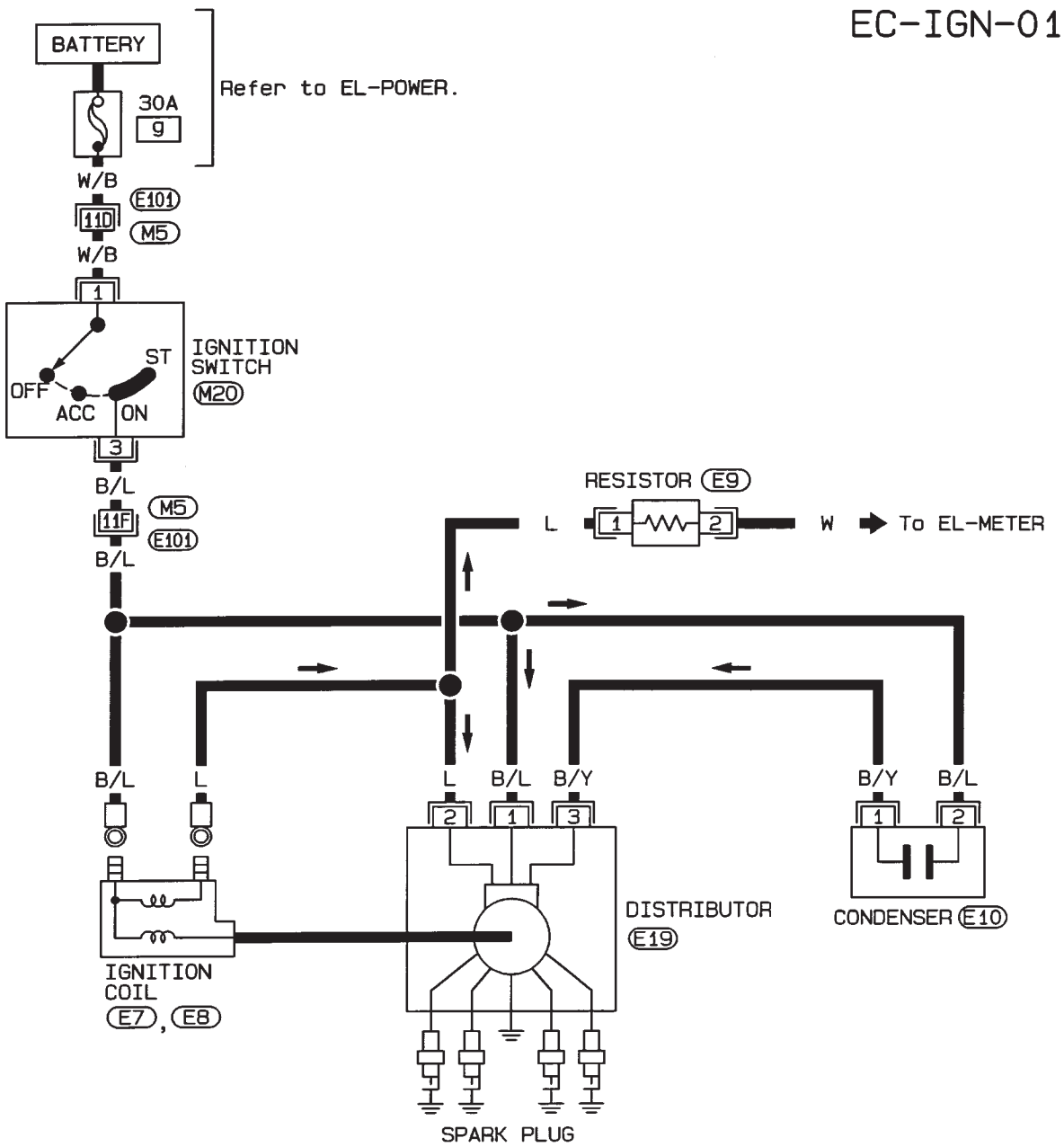

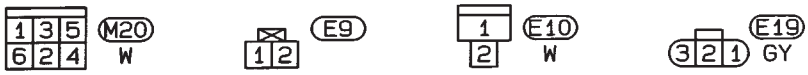

Refer to last page (Foldout page).

M5, E101

HEC380

System Description

Ignition timing is controlled by two systems built into the distributor to meet varying conditions during engine operation:

1) Governor advance system
   Advances ignition timing in response to engine speed.
2) Vacuum advance system
   Advances ignition timing by compensating for combustion speed delay when intake vacuum is high.

Vacuum source	Control vacuum of carburetor
	Intake manifold vacuum

The vacuum control solenoid valve is installed in the vacuum control line to the distributor. When the vacuum switch detects intake manifold vacuum, the vacuum control solenoid valve operates. Ignition timing is advanced during deceleration to prevent after burn.

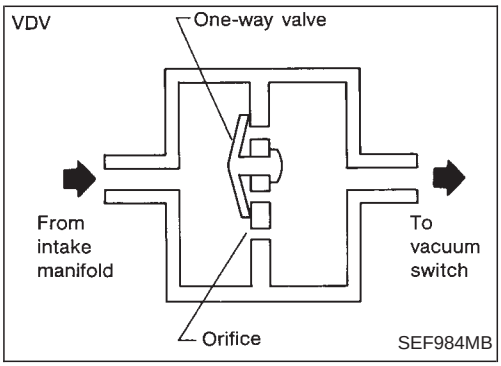

Component Parts Description

VACUUM DELAY VALVE (VDV)

The vacuum delay valve is installed in the vacuum control line to the vacuum switch. This valve prevents ignition timing from retarding suddenly when the throttle valve is opened rapidly.

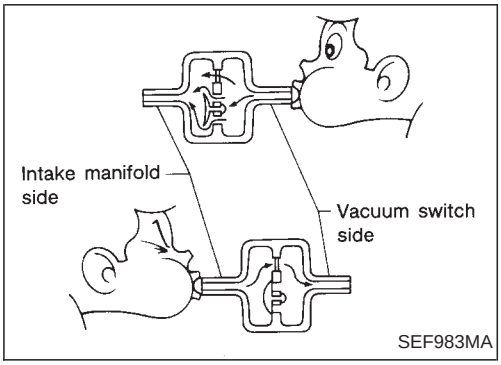

Component Parts Inspection

VACUUM DELAY VALVE

1. Blow air from the port of the vacuum switch side. The valve is in good condition if the air flows through the valve.
2. Try again from the opposite side of the valve. The valve is in good condition if the air flow resistance is greater than in step 1 above.

CAUTION:
Be careful to avoid entry of oil or dirt into valve.

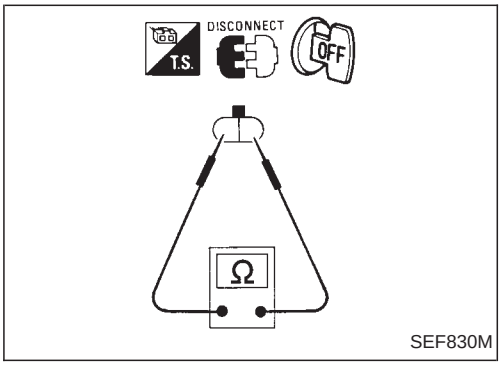

VACUUM SWITCH

1. Disconnect vacuum switch connector.
2. Check continuity between terminals.
3. Apply vacuum to vacuum switch port with a hand vacuum pump.

Applied vacuum −kPa (−mbar, −mmHg, −inHg)	Continuity
Below 80.0 (800, 600, 23.62)	Yes
Above 83.0 (830, 623, 24.53)	No

If NG, replace vacuum switch.

Component Parts Inspection (Cont'd)

VACUUM CONTROL SOLENOID VALVE

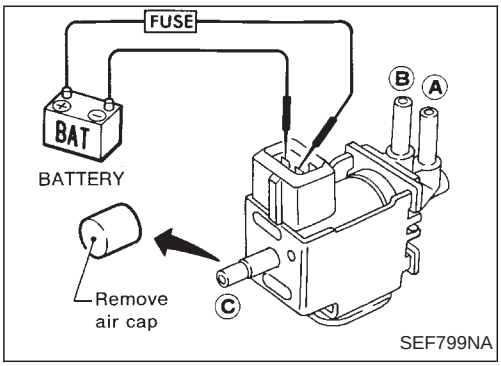

SEF799NA

Check air passage continuity.

Condition	Air passage continuity between Ⓐ and Ⓑ	Air passage continuity between Ⓑ and Ⓒ
12V direct current supply between terminals	Yes	No
No supply	No	Yes

If NG, replace solenoid valve.

IGNITION COIL

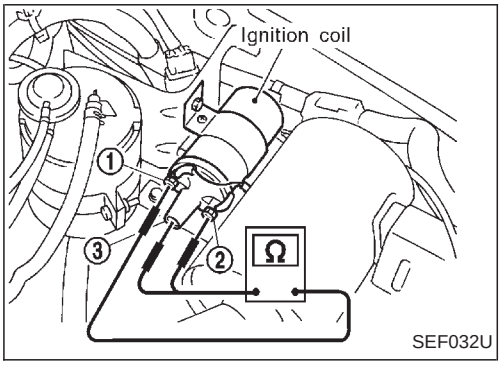

SEF032U

1. Disconnect ignition coil harness connector.
2. Check resistance as shown in the figure.

Terminal	Resistance
① - ②	Approximately 1Ω
① - ③	Approximately 10 kΩ

If NG, replace ignition coil.

RESISTOR

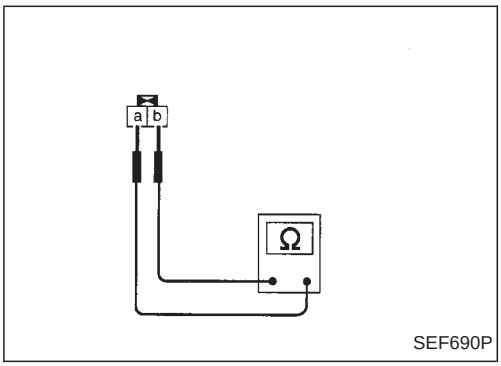

SEF690P

1. Disconnect resistor harness connector.
2. Check resistance between terminals ⓐ and ⓑ.
   Resistance: Approximately 2.2 kΩ

   If NG, replace resistor.

Disassembly

The distributor is not repairable and must be replaced as an assembly except for the distributor cap.

Distributor Component Check

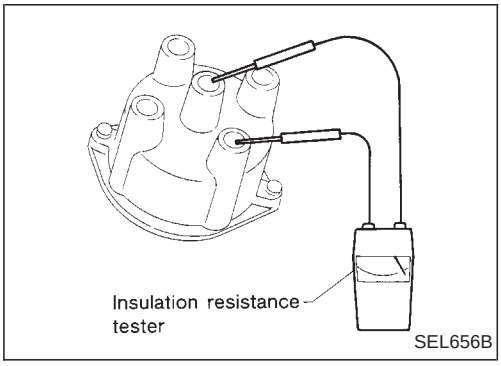

CAP AND ROTOR HEAD

1. Check cap and rotor head for dust, carbon deposits and cracks.
2. Measure insulation resistance between electrodes on ignition coil and spark plug sides on cap.
   Insulation resistance:
   More than 50 MΩ

- Less than specified value ... Replace.

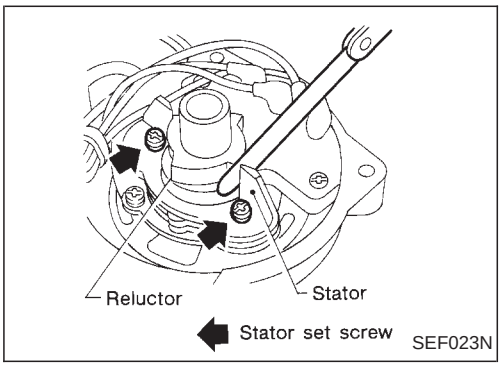

CHECKING AIR GAP

Check air gap between reluctor and stator.

Air gap:
0.25 - 0.5 mm (0.0098 - 0.0197 in)

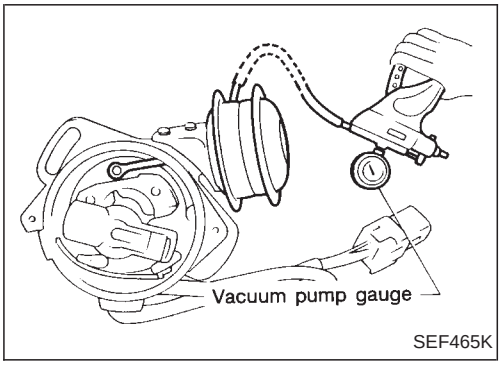

VACUUM ADVANCE

1. Connect vacuum pump gauge to vacuum controller and gradually draw a vacuum while watching breaker plate movement. Check for smooth operation with no evidence of binding.
2. Turn breaker plate right and left to check for freedom of movement.

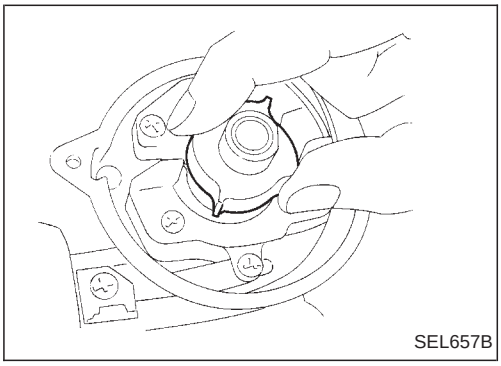

GOVERNOR ADVANCE

Turn head of cam assembly counterclockwise, release it, then check that it returns smoothly to the original position.

Boost Control Valve (BCV)

DESCRIPTION

The function of the BCV is to open the air passage during deceleration. During deceleration, the air-fuel mixture ratio becomes unbalanced and normal combustion cannot continue. Thus, unburned hydrocarbons are emitted. The BCV supplies additional air into the intake manifold to balance the air-fuel mixture ratio and prevent such unburned hydrocarbons from being emitted which also helps to prevent after burn.

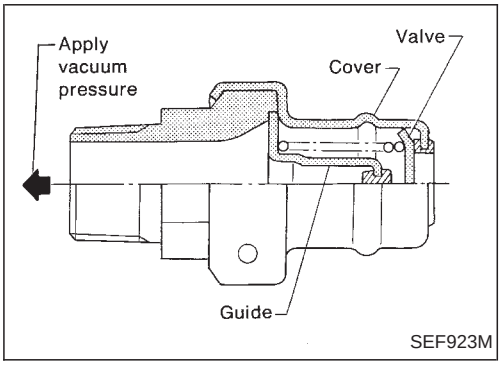

INSPECTION

Apply vacuum pressure below −81.3 kPa (−813 mbar, −610 mmHg, −24.02 inHg) to BCV and check the operation. If NG, replace valve.

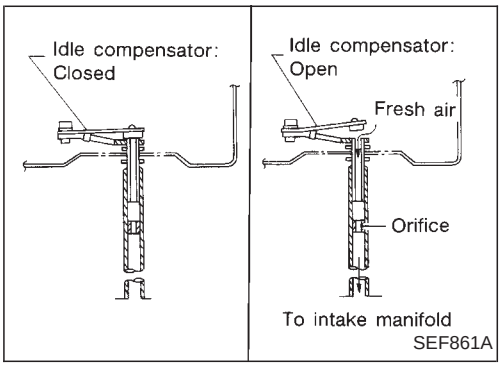

Idle Compensator

The idle compensator is basically a thermostatic valve which introduces air directly from the air cleaner to the intake manifold to compensate for abnormal enrichment of mixture in high idle temperatures and to stabilize the engine. The idle compensator is installed on the air cleaner.

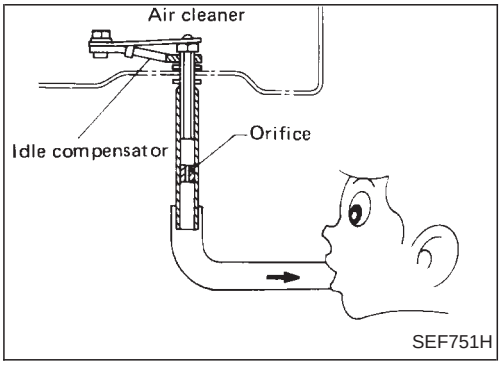

Inspection

1. Remove air cleaner.
2. Suck on hose to make sure neither idle compensator opens.

Idle compensator opening temperature

Intake air temperature °C (°F)	Bimetal function
Below 60 (140)	Fully closed
60 - 65 (140 - 149)	Closed or open
Above 65 (149)	Fully open

3. Direct warm air to idle compensator with a heat gun.
   And measure operating temperature of idle compensator.

- **Place thermometer as close as possible to idle compensator sensor.**

4. Idle compensator is in good condition if airflow opens idle compensator when it reaches operating temperature.

- **Take care not to bend or damage bimetals of idle compensator.**

Description

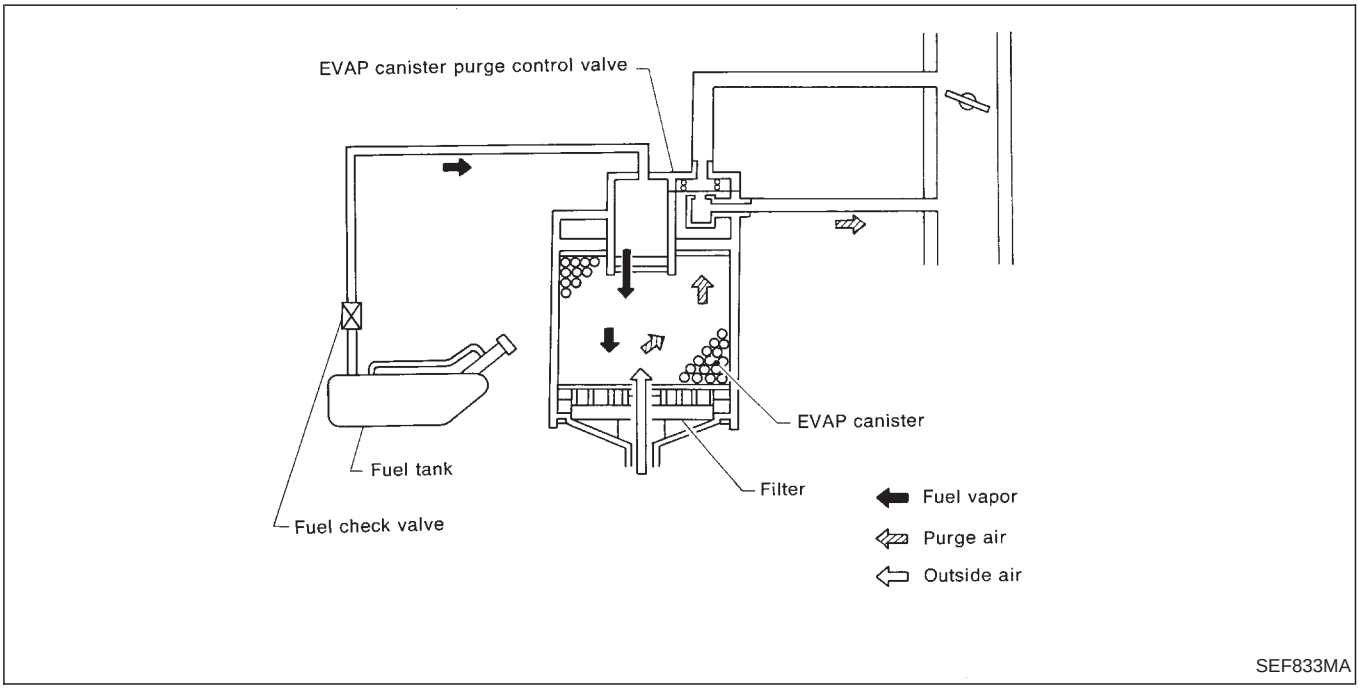

The evaporative emission control system is used to reduce hydrocarbons emitted into the atmosphere from the fuel system. This reduction of hydrocarbons is accomplished by activated charcoals in the EVAP canister.
The fuel vapor from sealed fuel tank is led into the EVAP canister when the engine is off. The fuel vapor is then stored in the EVAP canister. The EVAP canister retains the fuel vapor until the EVAP canister is purged by air.
When the engine is running, the air is drawn through the bottom of the EVAP canister. The fuel vapor will then be led to the intake manifold.

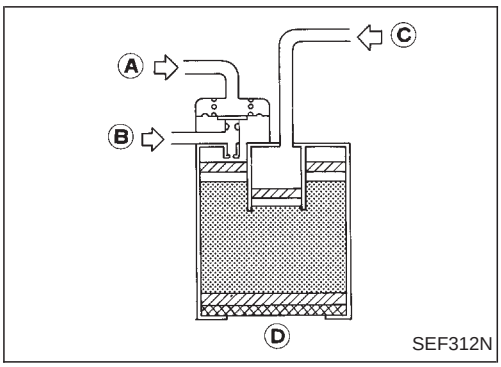

Inspection

EVAP CANISTER

Check EVAP canister as follows:
1. Blow air in port Ⓐ and ensure that there is no leakage.
2.
- Apply vacuum to port Ⓐ. [Approximately −13.3 to −20.0 kPa (−133 to −200 mbar, −100 to −150 mmHg, −3.94 to −5.91 inHg)]
- Cover port Ⓓ with hand.
- Blow air in port Ⓒ and ensure free flow out of port Ⓑ.

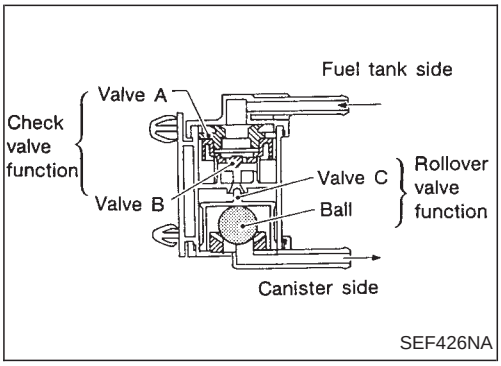

FUEL CHECK VALVE (With rollover valve)

Check valve operation

1. Blow air through connector on fuel tank side.
   A considerable resistance should be felt and a portion of air flow should be directed toward the EVAP canister side.
2. Blow air through connector on EVAP canister side.
   Air flow should be smoothly directed toward fuel tank side.
3. If fuel check valve is suspected of not properly functioning in steps 1 and 2 above, replace it.

Inspection (Cont'd)

Rollover valve operation

Ensure that continuity of air passage does not exist when the installed rollover valve is tilted to 90° or 180°.

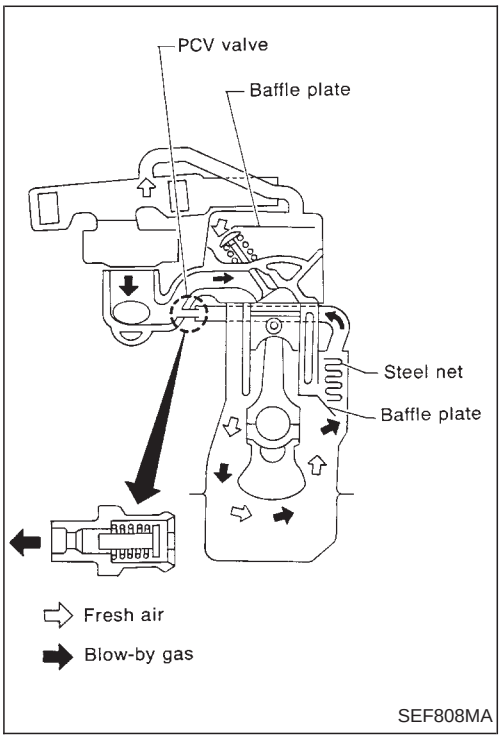

SEF808MA

Description

This system returns blow-by gas to both the intake manifold and air cleaner.
The positive crankcase ventilation (PCV) valve is provided to conduct crankcase blow-by gas to the intake manifold.
During partial throttle operation of the engine, the intake manifold sucks the blow-by gas through the PCV valve.
Normally, the capacity of the valve is sufficient to handle any blow-by and a small amount of ventilating air.
The ventilating air is then drawn from the air cleaner, through the hose connecting air cleaner to rocker cover, into the crankcase.
Under full-throttle condition, the manifold vacuum is insufficient to draw the blow-by flow through the valve, and its flow goes through the hose connection in the reverse direction.
On vehicles with an excessively high blow-by some of the flow will go through the hose connection to the air cleaner under all conditions.

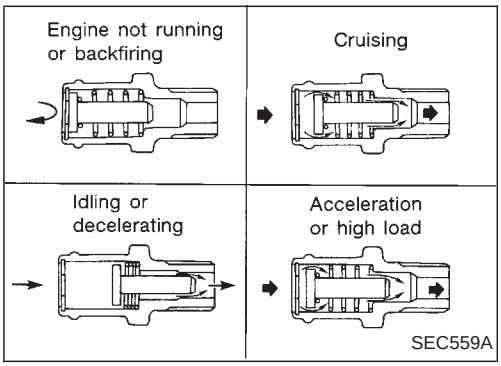

SEC559A

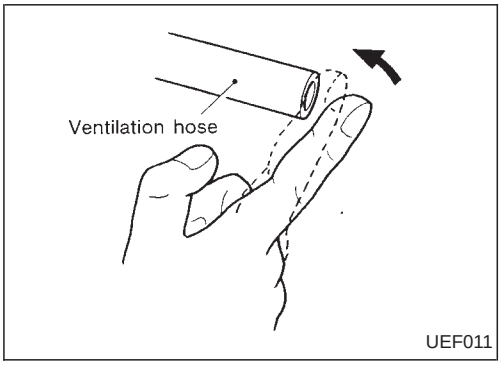

UEF011

Inspection

PCV (Positive Crankcase Ventilation) VALVE

With engine running at idle, remove ventilation hose from rocker cover. A properly working valve makes a hissing noise as air passes through it. A strong vacuum should be felt immediately when a finger is placed over hose inlet.

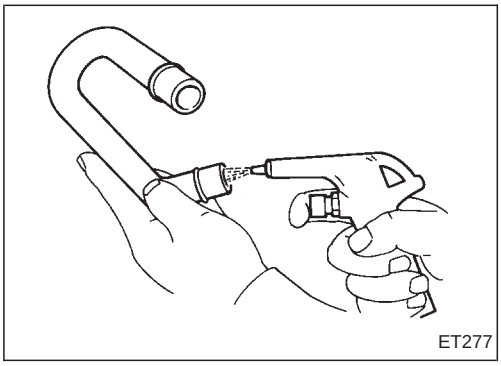
ET277

VENTILATION HOSE

1. Check hoses and hose connections for leaks.
2. Disconnect all hoses and clean with compressed air. If any hose cannot be freed of obstructions, replace.

Component Parts Location

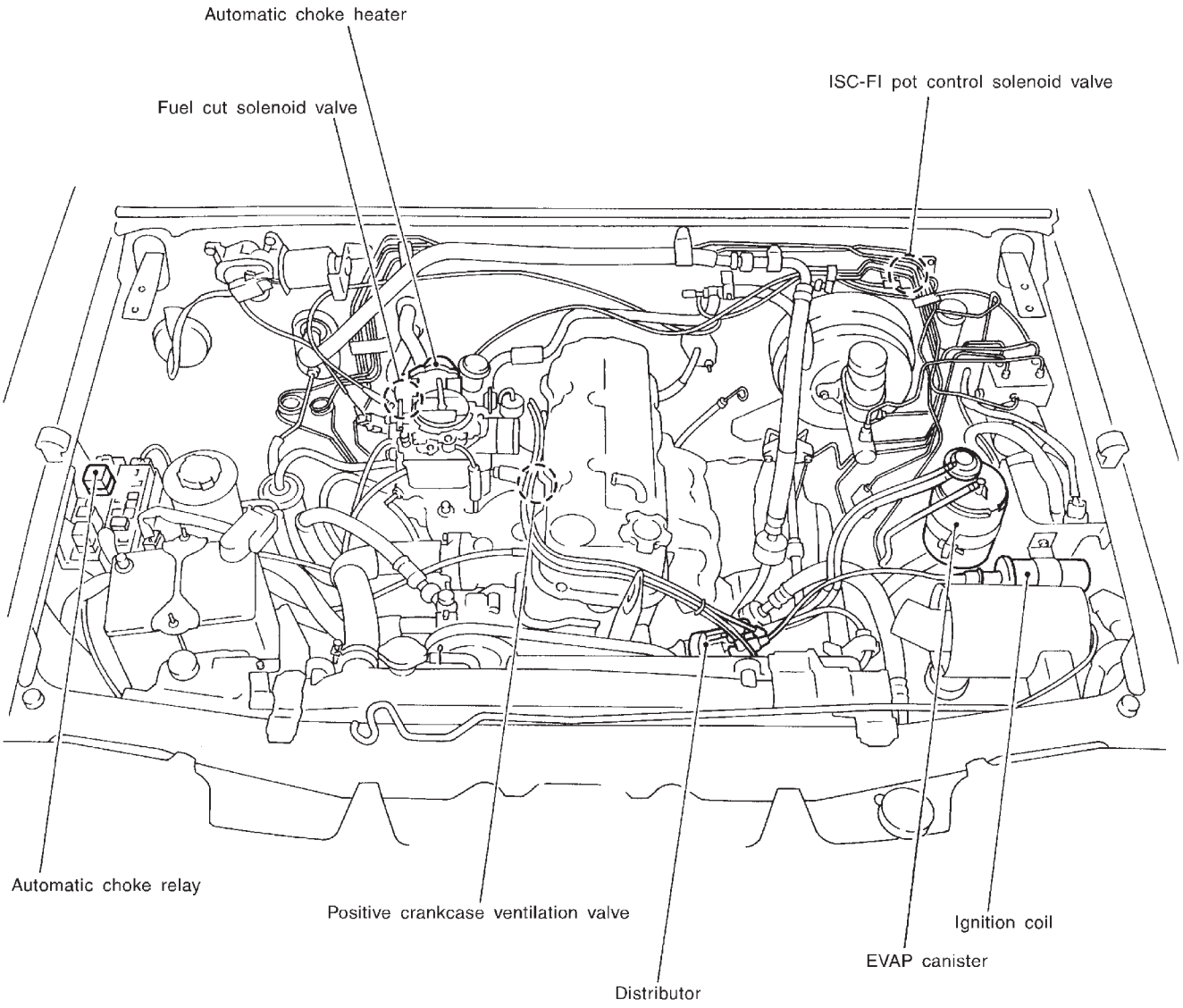

SEF012U

System Diagram

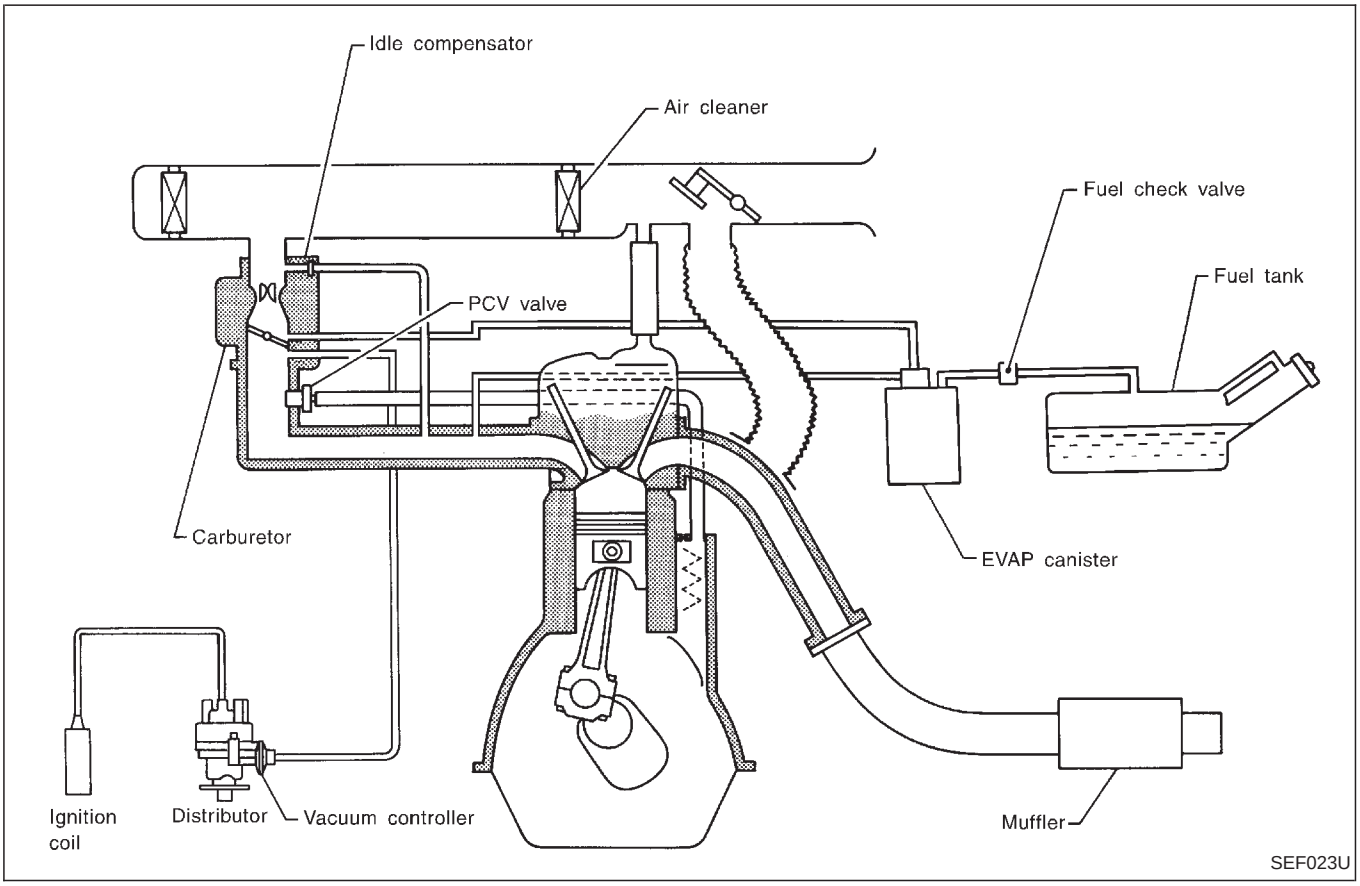

Circuit Diagram

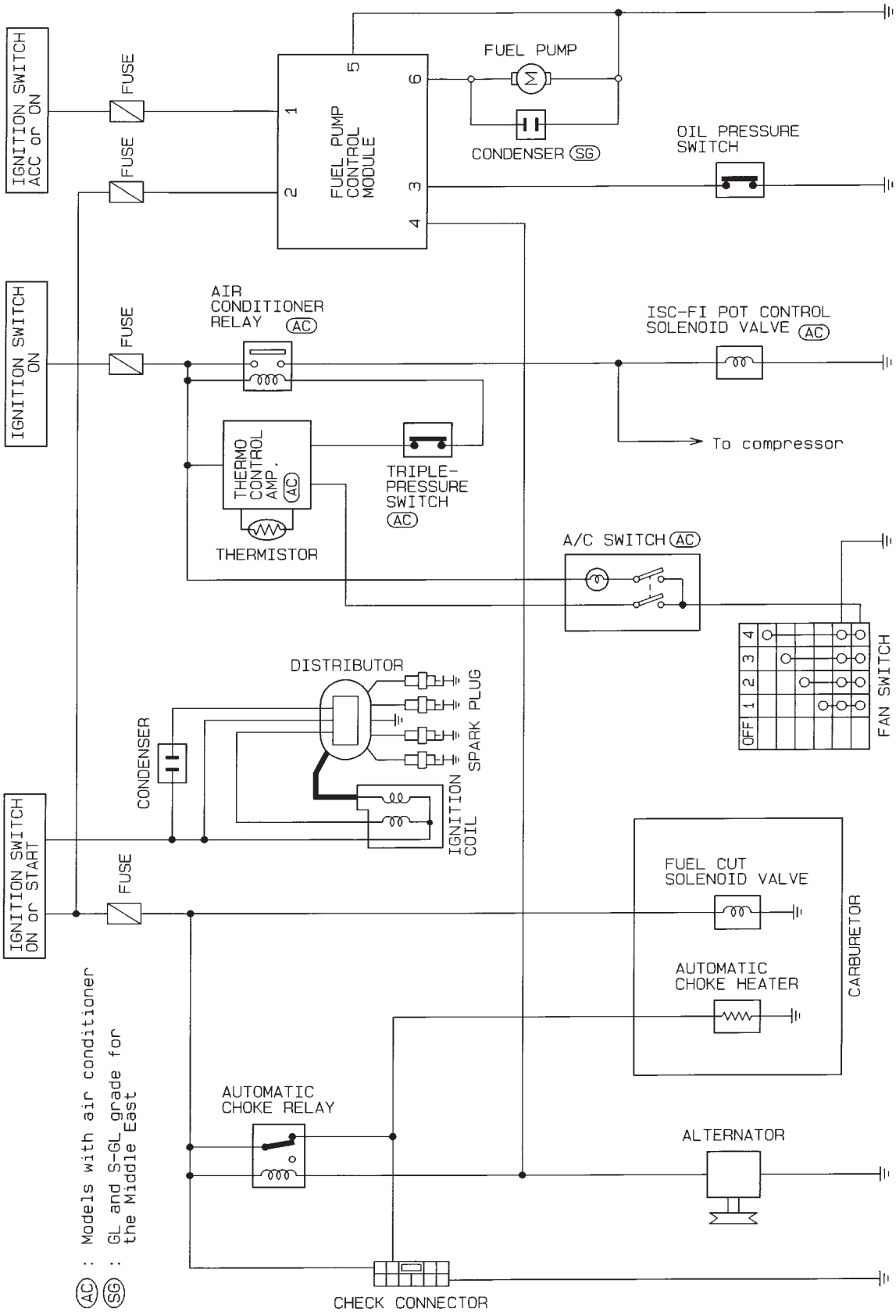

HEC405

Vacuum Hose Drawing

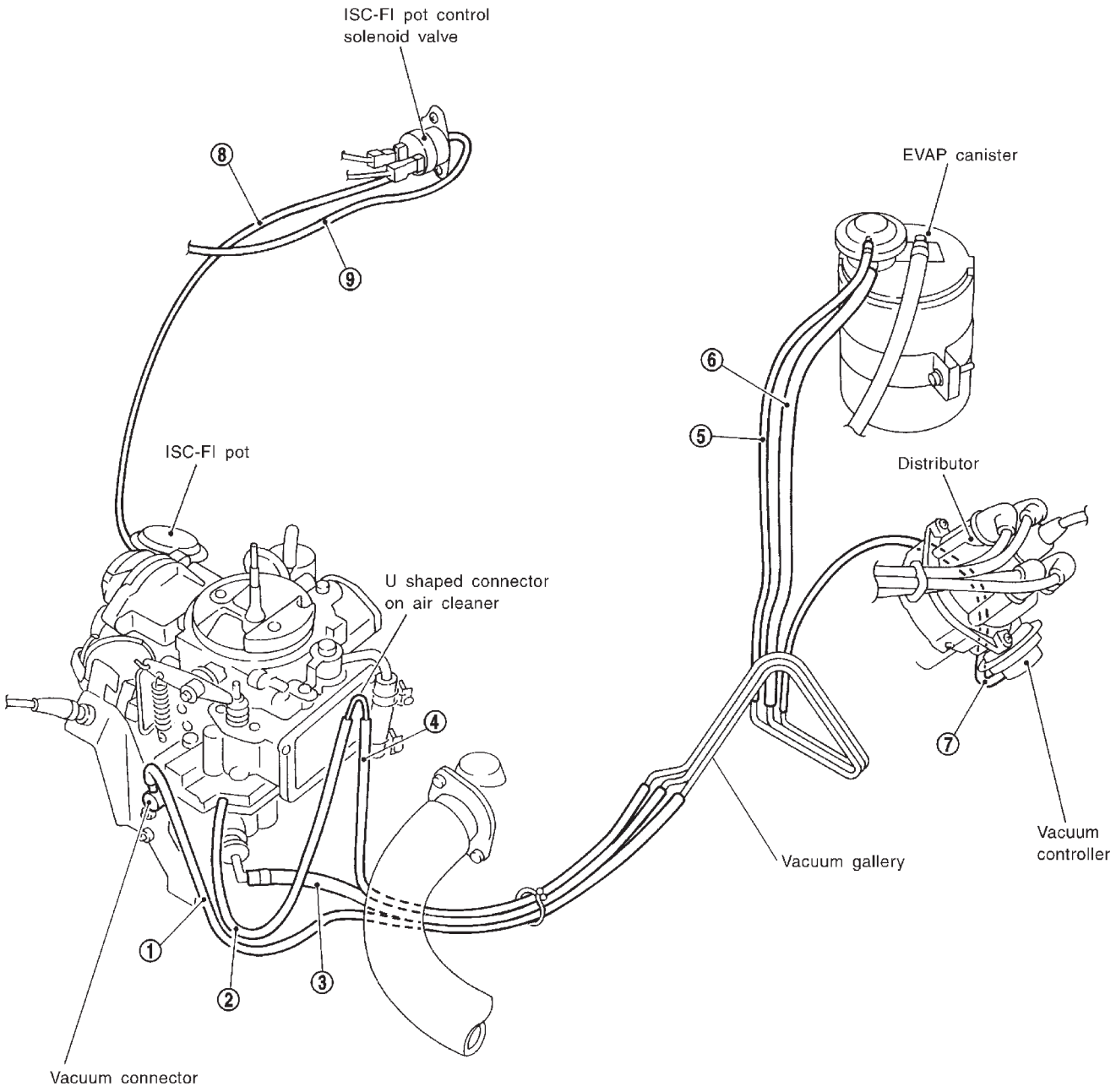

① Vacuum connector to vacuum gallery
② Vacuum port to U shaped connector
③ Intake manifold to vacuum gallery
④ U shaped connector to vacuum gallery
⑤ EVAP canister to vacuum gallery
⑥ EVAP canister to vacuum gallery
⑦ Distributor to vacuum gallery
⑧ ISC-FI pot control solenoid valve to ISC-FI pot
⑨ ISC-FI pot control solenoid valve to brake vacuum check valve

Construction

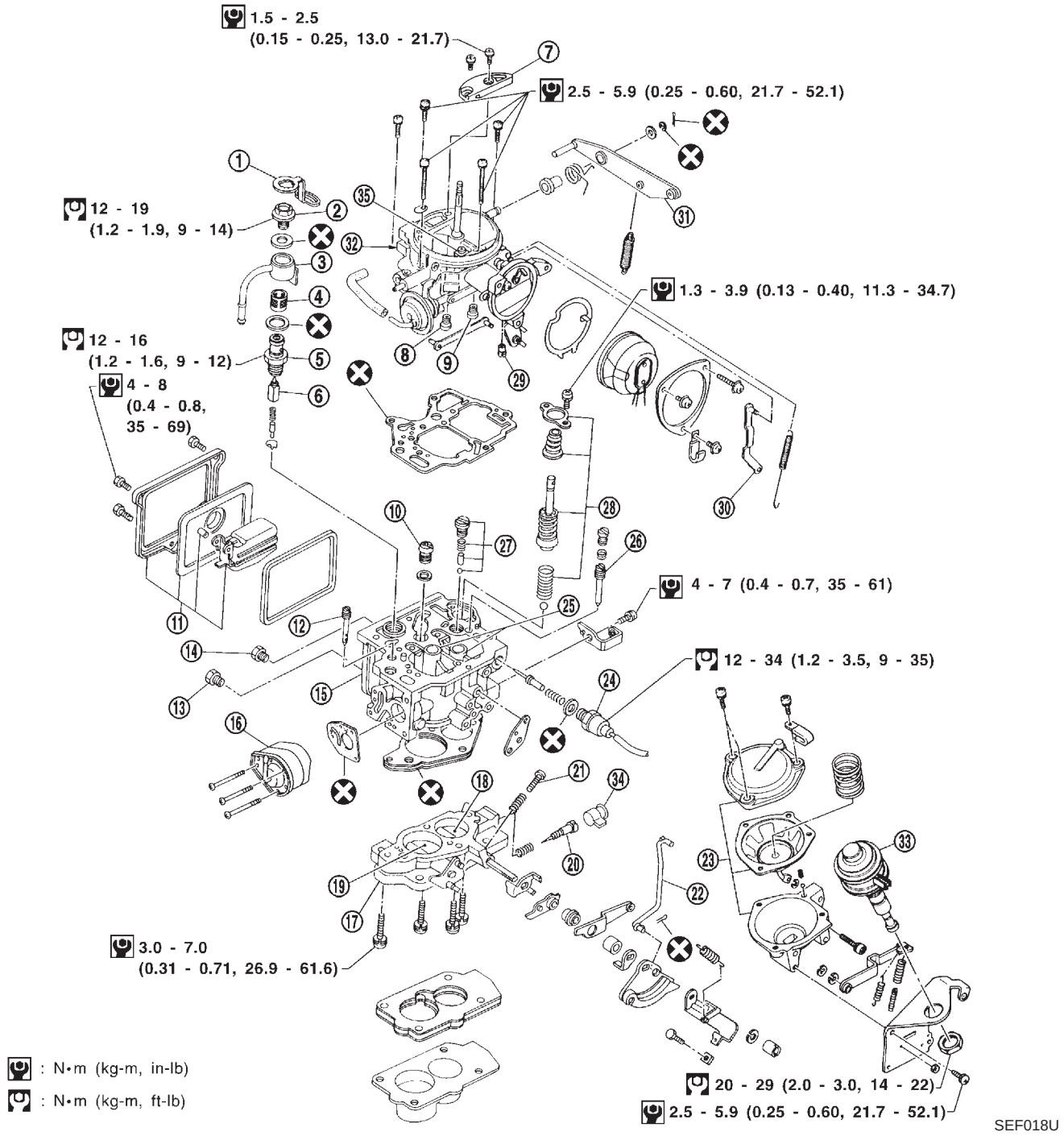

① Lock plate
② Filter set screw
③ Fuel nipple
④ Fuel filter
⑤ Needle valve body
⑥ Needle valve
⑦ Air vent cover
⑧ Secondary main air bleed
⑨ Primary main air bleed
⑩ Power valve
⑪ Float
⑫ Secondary slow jet
⑬ Secondary main jet
⑭ Primary main jet
⑮ Carburetor body
⑯ BCDD
⑰ Throttle body
⑱ Primary throttle valve
⑲ Secondary throttle valve
⑳ Idle adjusting screw
㉑ Throttle adjusting screw
㉒ Accelerating pump rod
㉓ Diaphragm chamber parts
㉔ Fuel cut solenoid valve
㉕ Small venturi
㉖ Primary slow jet
㉗ Accelerating pump injector parts
㉘ Accelerating pump parts
㉙ Primary slow air bleed
㉚ Choke connecting rod
㉛ Accelerating pump lever
㉜ Choke chamber
㉝ FI pot
㉞ Idle limiter cap
㉟ Idle compensator

Construction (Cont'd)

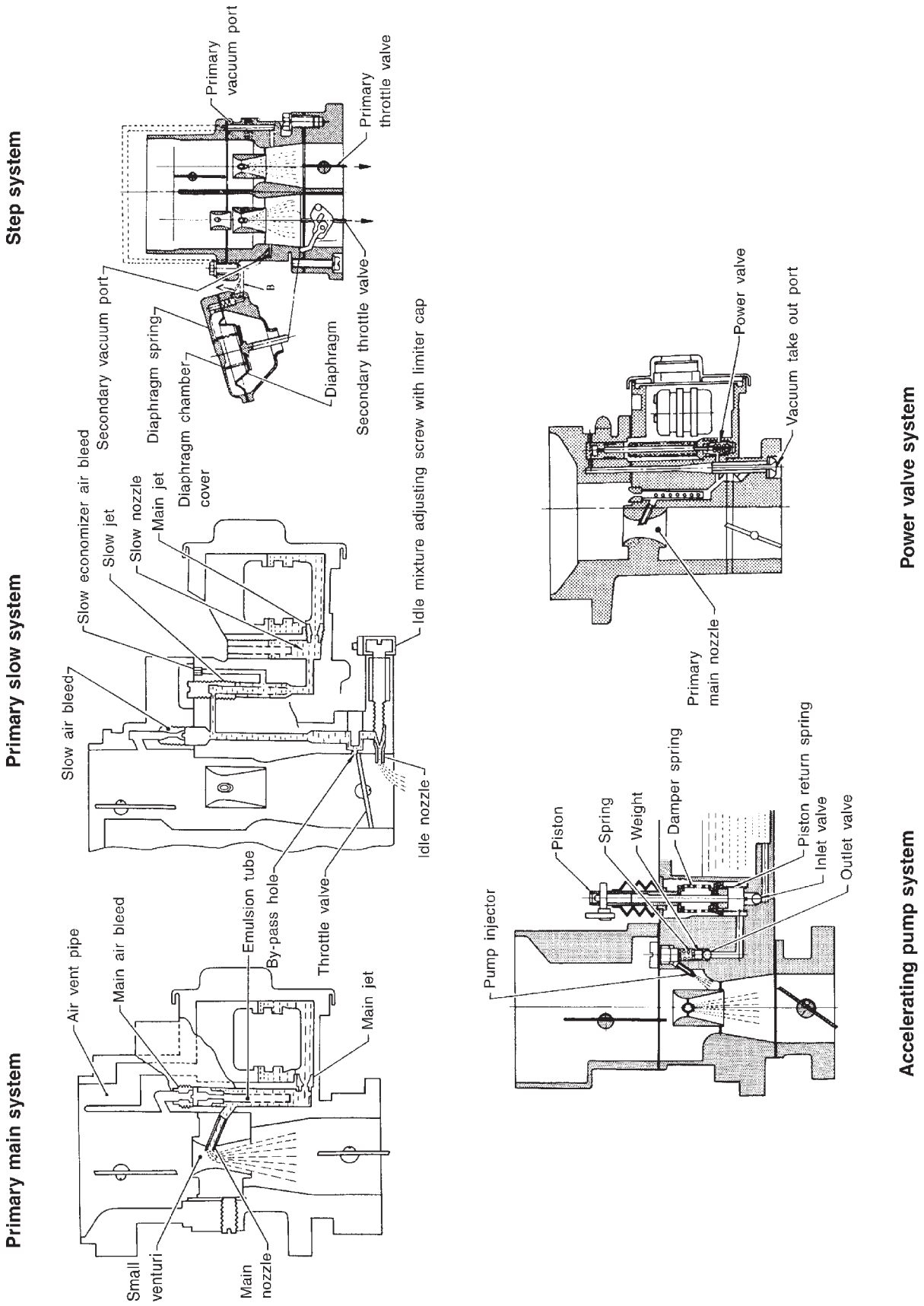

SEF019U

Major Service Operation

The perfectly adjusted carburetor delivers the proper fuel and air ratios at all speeds for the particular engine for which it was designed.
The carburetor should be maintained in its original condition and will continue to deliver the proper ratio.
To maintain accurate carbureting through passages and discharge holes, extreme care must be taken in cleaning.

REMOVAL

Remove carburetor from engine, taking sufficient care to the following:

PRECAUTIONS:

a. When disconnecting fuel lines, do not spill fuel from fuel pipe.
b. When removing carburetor, do not drop any nut or bolt into intake manifold.
c. Be careful not to bend or scratch any part.

CLEANING AND INSPECTION

Dirt, gum, water or carbon contamination in or on exterior moving parts of a carburetor often results in unsatisfactory performance. For this reason, efficient carbureting depends upon careful cleaning and inspection while servicing.
Before assembling and installing the carburetor, blow all passages and castings with compressed air and blow off all parts until dry.
Do not pass drills or wires through calibrated jets or passages as this may enlarge orifice and seriously affect carburetor calibration.

Disassembling Carburetor Harness Connector

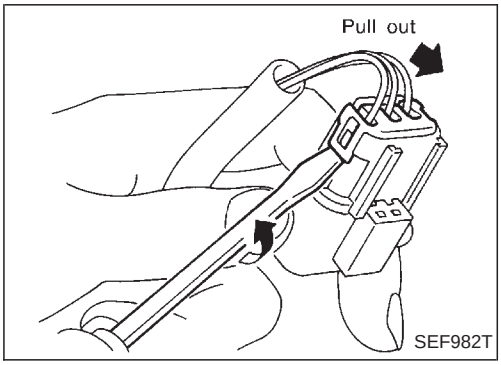

If waterproof type harness connector is used, when replacing fuel cut solenoid valve or automatic choke heater (choke chamber assembly), it will be necessary to disassemble carburetor harness connector.

1. Remove rear clip.

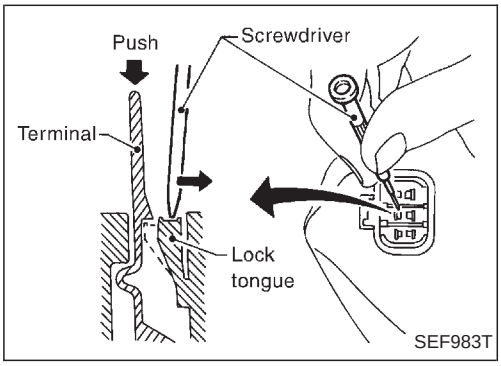

2. With a small screwdriver, tilt lock tongue and, at the same time, push out terminal.

CAUTION:

- **When extracting terminal, do not pull wire harness. Always push the top of terminal.**
- **Take care not to damage seal boot at the bottom of terminal.**
- **Do not let oil or gasoline adhere to seal boot.**

Checking and Adjusting Idle Speed, Ignition Timing and Mixture Ratio

CAUTION:

- Idle mixture ratio is adjusted at factory and requires no further adjustment. If it becomes necessary to adjust it, proceed with the following steps.
- Do not attempt to screw the idle adjusting screw down completely. Doing so could cause damage to tip, which in turn will tend to cause malfunctions.
- After adjusting idle speed and mixture ratio, be sure to check items below, and if necessary, adjust them.
  (1) Fast idle adjustment
  (2) FICD adjustment

PREPARATION

1. Make sure that the following parts are in good order.
- Battery
- Ignition system
- Engine oil and coolant levels
- Fuses
- Vacuum hoses
- Air intake system
  (Oil filler cap, oil level gauge, etc.)
- Engine compression
- Throttle valve
2. On air conditioner equipped models, checks should be carried out while the air conditioner is “OFF”.
3. When measuring “CO” percentage, insert probe more than 40 cm (15.7 in) into tail pipe.
4. Turn off headlamps, heater blower, rear defogger.
5. Keep front wheels pointed straight ahead.

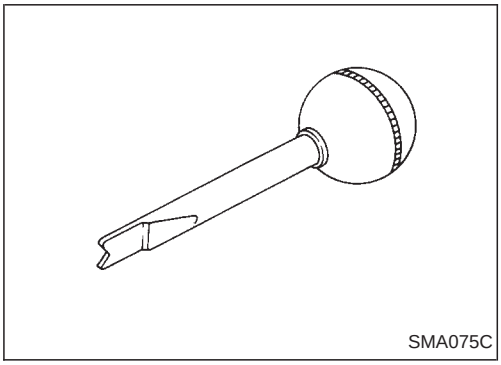
SMA075C

6. Use idle adjusting screwdriver (KV10108300) when adjusting idle adjusting screw.

WARNING:

Depress brake pedal while revving the engine to prevent forward surge of vehicle.

Checking and Adjusting Idle Speed, Ignition Timing and Mixture Ratio (Cont'd)

A

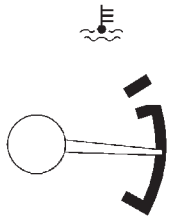

SEF984T

B

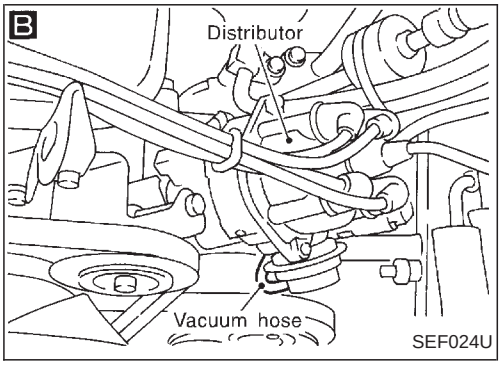

SEF024U

C

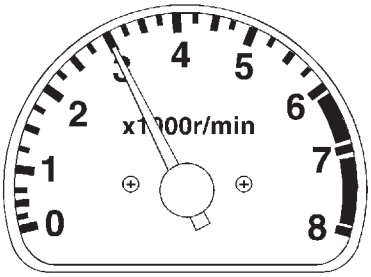

SEF986T

D

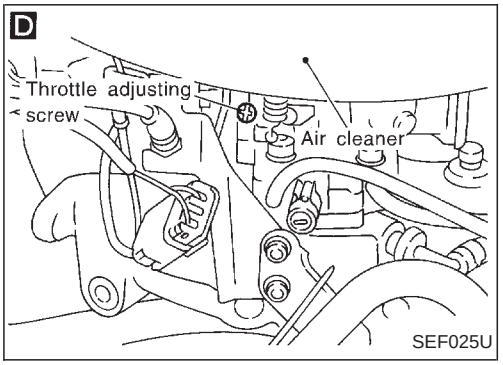

SEF025U

E

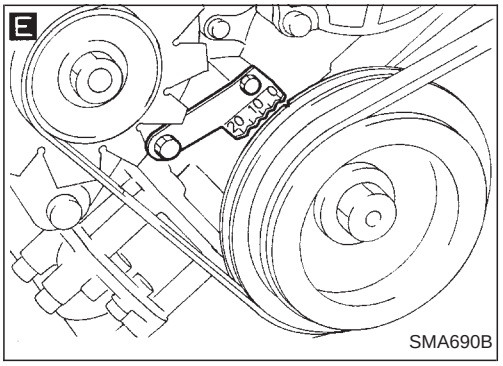

SMA690B

START

A

Start engine and warm it up until engine coolant temperature indicator points to the middle of gauge.

Open engine hood.

Run engine at idle speed for 2 minutes.

B

Disconnect distributor vacuum hose on distributor diaphragm side and install blind cap to hose. ← Ⓑ

C

Rev engine (2,000 - 3,000 rpm) 2 or 3 times under no-load, and then run engine at idle speed for 1 minute.

Check idle speed.

Idle speed:
Below 800 rpm

OK → E

NG → D

D

Adjust idle speed by turning throttle adjusting screw. → C

E

Check ignition timing at idle speed.

Ignition timing: degree BTDC (in "N" position)
3±2

OK → Connect distributor vacuum hose to distributor diaphragm.

NG → F

F

Adjust ignition timing by turning distributor. → C

Connect distributor vacuum hose to distributor diaphragm.

Ⓐ

Checking and Adjusting Idle Speed, Ignition Timing and Mixture Ratio (Cont'd)

F

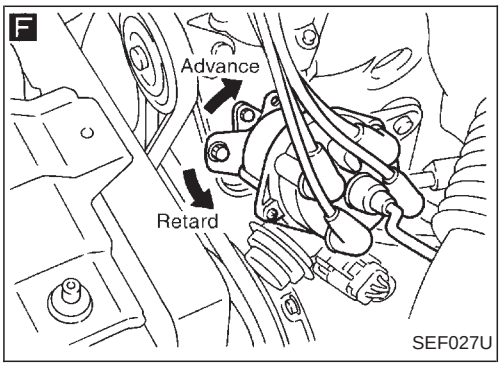

G

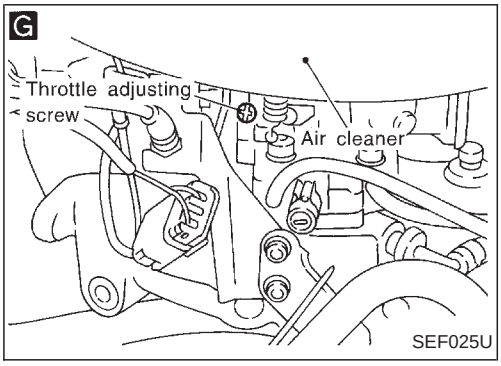

H

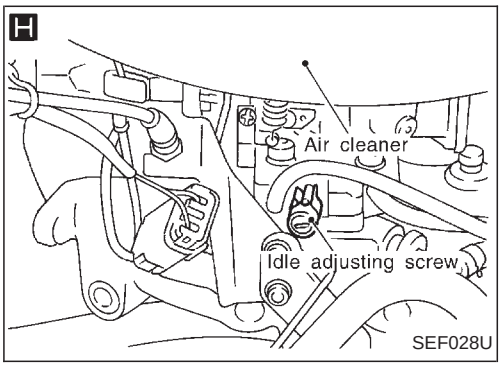

Ⓐ

Rev engine (2,000 - 3,000 rpm) 2 or 3 times under no-load, and then run engine at idle speed.

G

Adjust idle speed by turning throttle adjusting screw.

Idle speed: rpm (in "N" position)
800±50

Clean or replace vacuum hoses.

Confirm ignition timing at idle speed.

Ignition timing: degree BTDC (in "N" position)
15±5

NG → Check distributor and vacuum hoses.

Repair or replace distributor or vacuum controller.

OK

Without "CO"-meter. → Ⓒ

With "CO"-meter

H

Check "CO"% at idle speed.

Idle "CO": %
1.5±0.5

NG → Adjust idle "CO"% to 1.5±0.5% by turning idle adjusting screw. → Ⓑ

OK

END

Checking and Adjusting Idle Speed, Ignition Timing and Mixture Ratio (Cont'd)

I

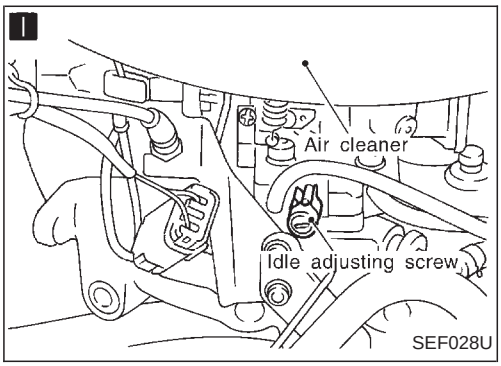

J

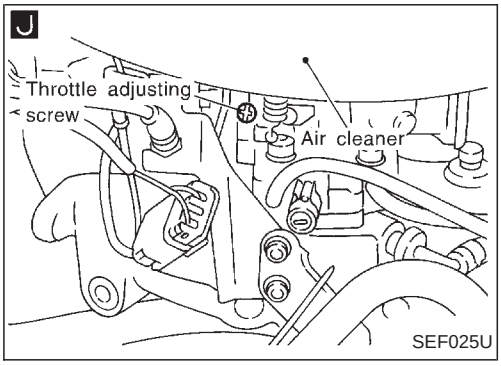

K

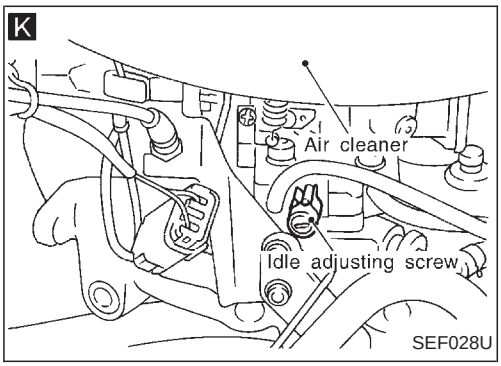

Ⓒ

I

Turn out idle adjusting screw approximately two turns, starting from fully closed position.

CAUTION:

Do not attempt to screw the idle adjusting screw down completely. Doing so could cause damage to tip, which in turn will tend to cause malfunctions.

J

Adjust engine speed by turning throttle adjusting screw.

Engine speed: rpm (in "N" position)
850±50

Turn idle adjusting screw until engine runs smoothly at highest speed.

Engine speed rises.

Engine speed does not rise.

K

Adjust engine speed by turning in idle adjusting screw.

Idle speed: rpm (in "N" position)
800±50

END

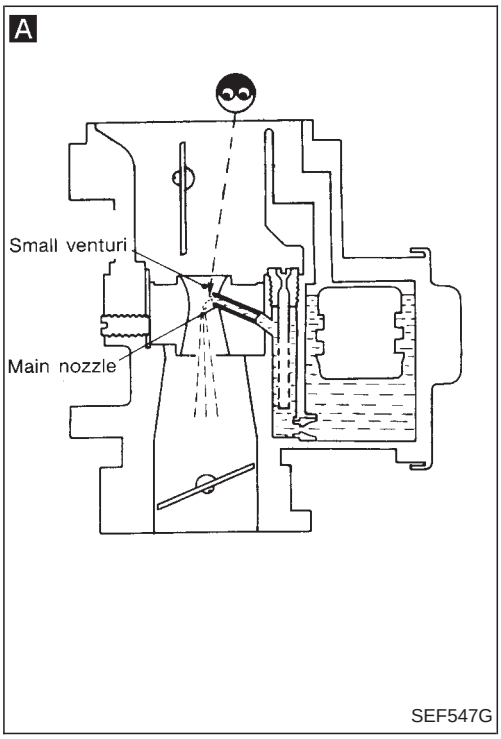

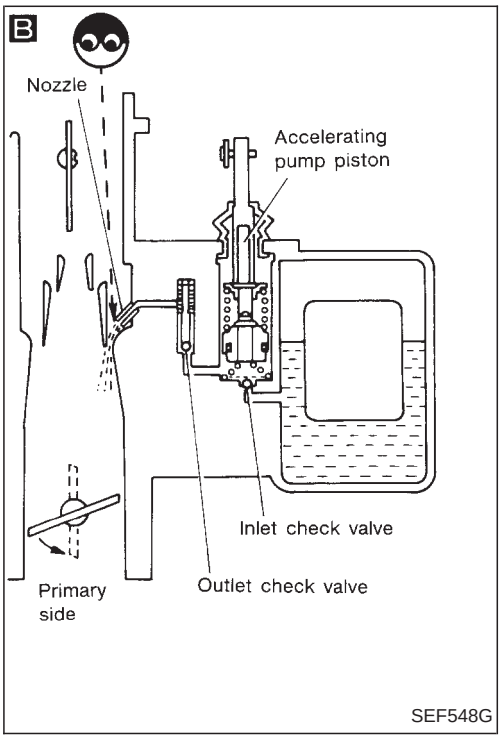

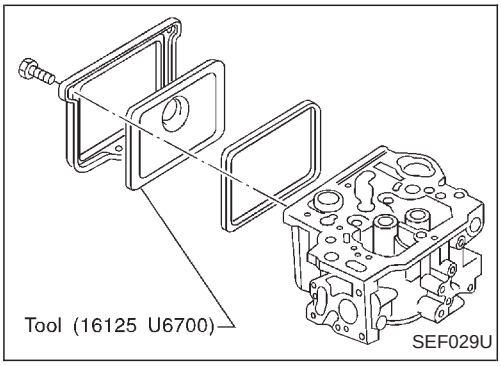

Fuel Level

INSPECTION

Disconnect ignition wire between distributor and ignition coil.

↓

Disconnect fuel cut solenoid valve connector of carburetor.

↓

A Check primary main nozzle to ensure that no fuel is discharging while cranking engine for approximately 3 seconds.

→ NG → Check needle valve for looseness or sticking. If necessary, repair or replace. Adjust fuel level.

↓ OK

B Check that acceleration pump nozzle injects fuel when throttle valve is opened.

→ NG → Adjust fuel level.

↓ OK

END

- If necessary, use Tool (16125 U6700) to visually check fuel level as follows:

1. Disconnect inlet fuel hose from carburetor, and plug opening.
2. Start engine and wait for it to stop.
3. Install Tool on carburetor, as shown.

- **Be careful not to spill fuel.**

4. Connect inlet hose to carburetor.
5. Start engine. Visually check fuel level.

- **If out of specification, adjust by bending float seat and float stopper.**

Fuel Level (Cont'd)

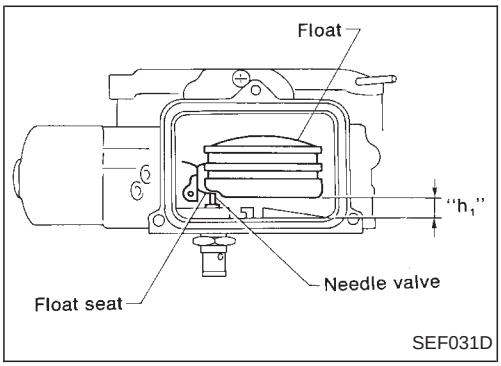

ADJUSTMENT

1. Remove carburetor from the engine.
2. Remove float chamber cover from the float chamber.
3. Turn carburetor upside down, and fix it horizontally.
4. Raise float fully, and lower it slowly until float seat contacts with needle valve, and in the position, check clearance "h_1".
   Clearance "h_1":
   8.6 - 9.6 mm (0.339 - 0.378 in)
   If out of specification, adjust by bending float seat.

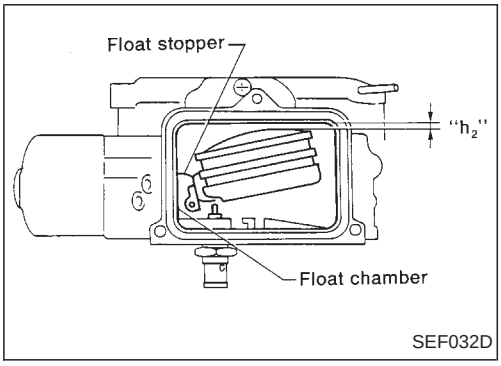

5. Raise float until float stopper touches the float chamber, and check clearance "h_2".
   Clearance "h_2":
   4.5 - 5.5 mm (0.177 - 0.217 in)
   If out of specification, adjust by bending float stopper.

6. Install float chamber cover and then place carburetor on the engine.
   Float chamber cover:
   : 4 - 7 N·m (0.4 - 0.7 kg-m, 35 - 61 in-lb)
   Carburetor installing nut:
   : 12 - 18 N·m (1.2 - 1.8 kg-m, 9 - 13 ft-lb)

CAUTION:
Always replace the float chamber cover gasket with new one.

7. Start the engine, and recheck fuel level with engine idling.

Automatic Choke

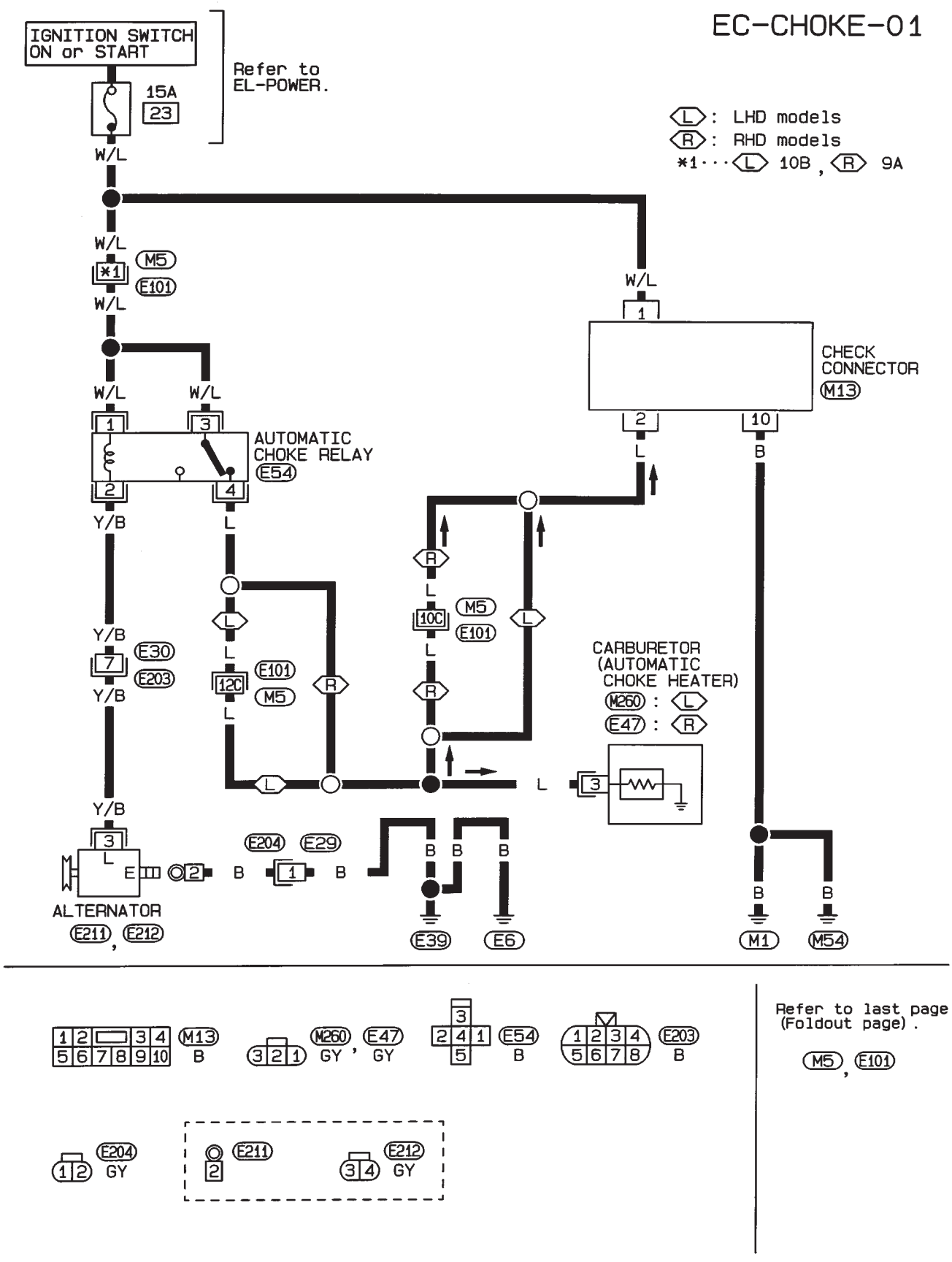

HEC384

Automatic Choke (Cont'd)

AUTOMATIC CHOKE MECHANISM

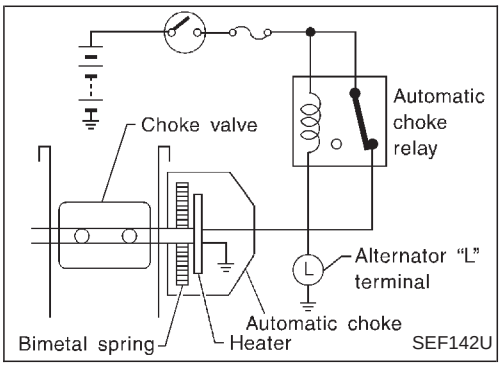

1. Before starting engine, fully open throttle valve and ensure that choke valve closes properly.
2. Push choke valve with a finger, and check for smooth movement.

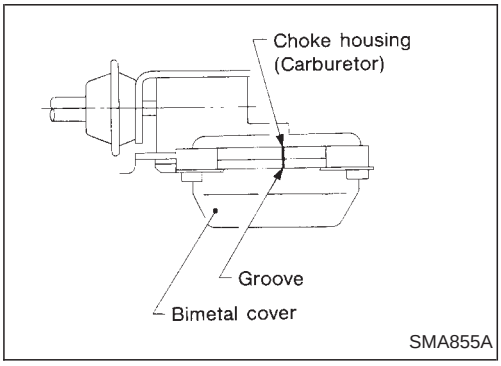

3. Check bimetal cover mark and choke housing mark. When bimetal cover is replaced, set bimetal cover mark so that it will be aligned with choke housing mark.
4. Check wiring connection, and start engine.
5. After warming up the engine, ensure that choke valve is fully open.
   If not, check automatic choke circuit and heater.

ENTIRE SYSTEM

Do not attach test leads of a circuit tester to those other than designated.

1. Start engine.

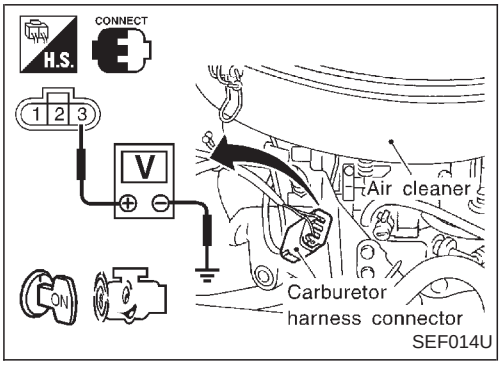

2. Check voltage between terminal ③ and ground, with engine running.
   Voltage: Approximately 9 - 12V
   If no voltage appears, check the following items.
   - Automatic choke circuit
   - Automatic choke relay
   - Automatic choke heater

AUTOMATIC CHOKE CIRCUIT

Do not attach test leads of a circuit tester to those other than designated.

1. Disconnect carburetor harness connector.

Automatic Choke (Cont'd)

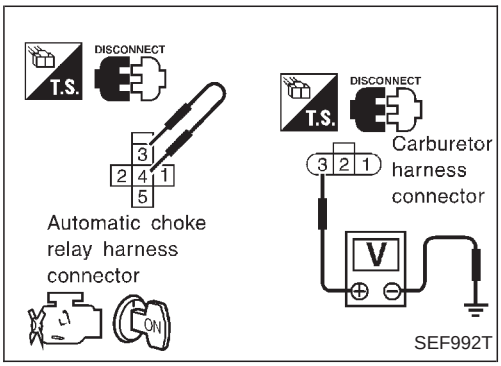

2. Disconnect automatic choke relay and then connect a suitable jumper wire between terminals ③ and ④.
3. Turn ignition switch "ON".
4. Check voltage between carburetor harness connector terminal ③ and body ground.
   Voltage: Battery voltage

   If NG, check or repair the harness.

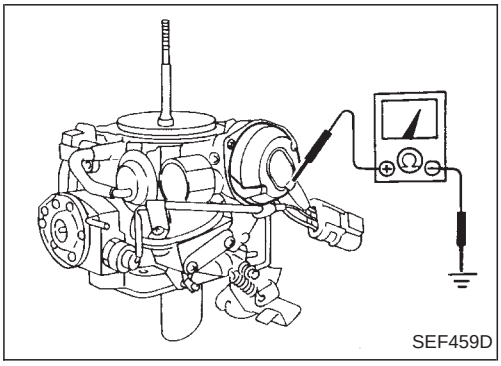

AUTOMATIC CHOKE HEATER

1. Disconnect carburetor harness connector.
2. Check continuity between choke heater connector and choke housing.
   Continuity should exist.

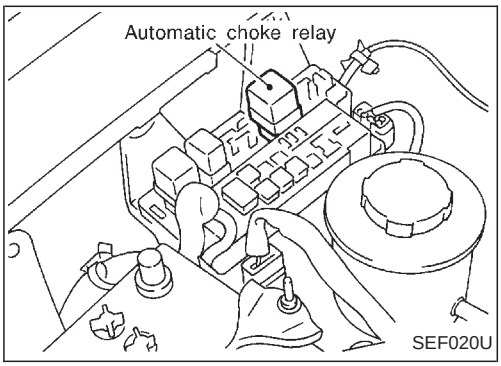

AUTOMATIC CHOKE RELAY

Check continuity between terminals ③ and ④.

Conditions	Continuity
12V direct current supply between terminals ① and ②	No
No current supply	Yes

If NG, replace relay.

Fast Idle

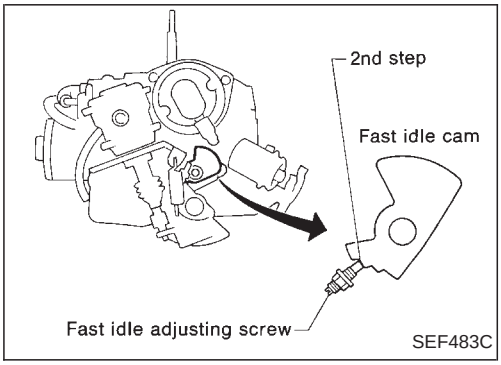

1. Warm up engine. Set fast idle arm on 2nd step of fast idle cam.
2. Check fast idle speed and if out of specification, adjust it by turning fast idle adjusting screw.
   Fast idle speed (at 2nd cam step):
   2,300±100 rpm

Make sure that the engine is completely adjusted (Idle speed, ignition timing, etc.) before checking or adjusting fast idle speed.

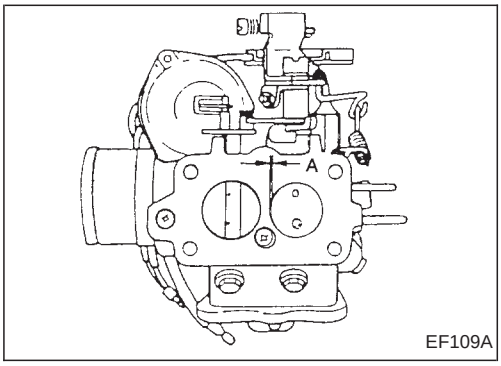

3. If out of specification, remove carburetor and make fast idle adjustments as follows.

1) Place fast idle arm on 2nd step of fast idle cam, in the same manner as in step 1 above.
2) Adjust clearance "A" between primary throttle valve and inner carburetor wall by turning fast idle adjusting screw.
   Clearance "A":
   0.88±0.07 mm (0.0346±0.0028 in)

If after adjustment and installation, the fast idle speed is out of specification, use clearance "A" values.

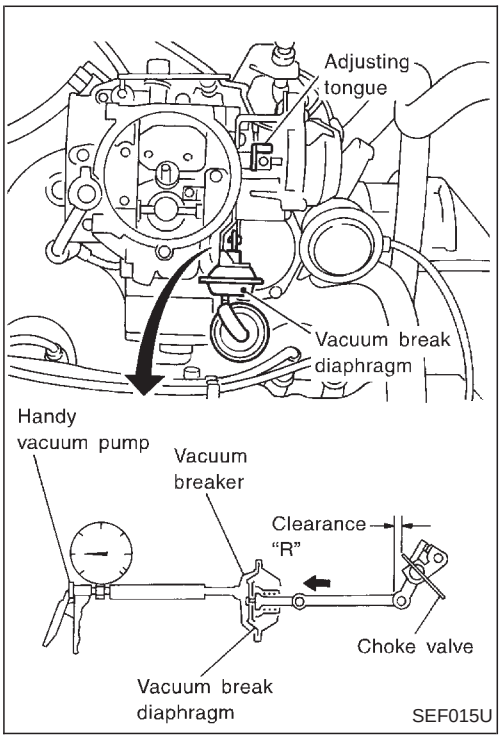

Vacuum Break

1. When engine is cold, close choke valve completely.
2. Apply vacuum to vacuum break diaphragm with a handy vacuum pump.
   Approximately −53.3 kPa
   (−533 mbar, −400 mmHg, −15.75 inHg)

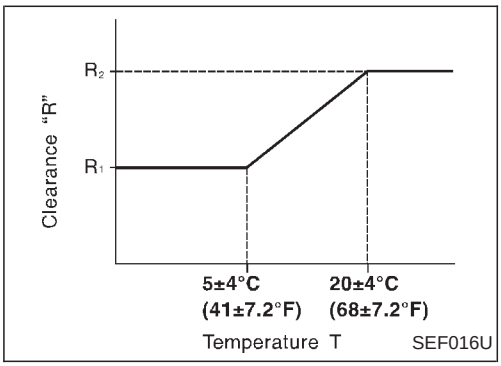

3. In this condition, check clearance "R" between choke valve and carburetor body.

Temperature °C (°F)	Clearance R mm (in)	
Below 5±4 (41±7.2)	R_1	1.46±0.15 (0.0575±0.0059)
Above 20±4 (68±7.2)	R_2	3.14±0.3 (0.1236±0.0118)

4. If out of specification, adjust "R" by bending tongue.

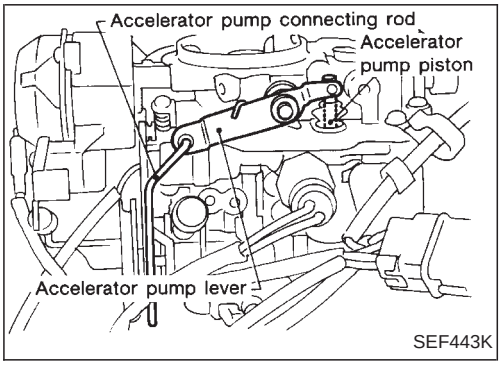

Accelerator Pump

1. With engine stopped, make a visual check of the accelerator pump connecting rod and lever.
- If they are bent or twisted, replace them.

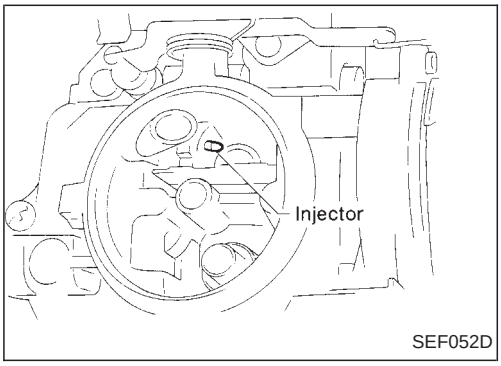

2. Turn the throttle lever and make sure that fuel is smoothly injected from the injector located in the primary port.
- If the accelerator pump is not functioning properly, check the pump piston.
  Replace it if necessary.

Fuel Cut Control System

EC-FCUT-01

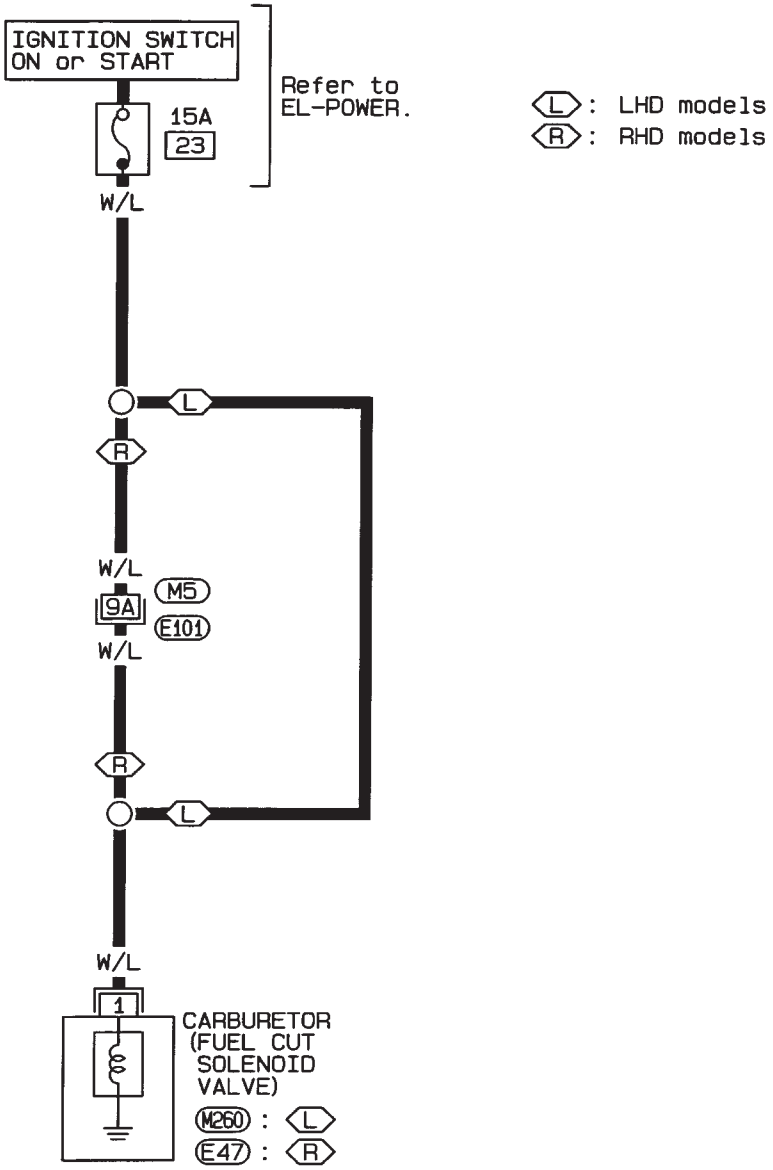

3 2 1 M260 GY , E47 GY

Refer to last page
(Foldout page).

M5 , E101

HEC385

Fuel Cut Control System (Cont'd)

FUEL CUT SOLENOID

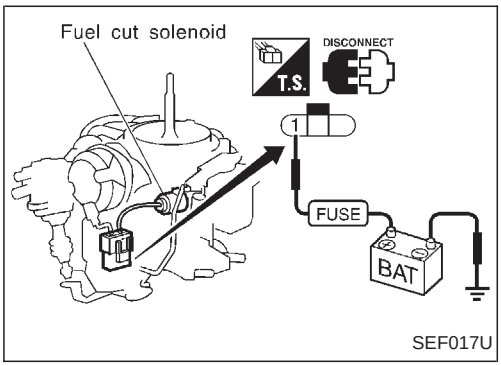

SEF017U

1. Connect solenoid valve connector to battery.
2. Check "click" sound from solenoid valve when battery is connected and disconnected.

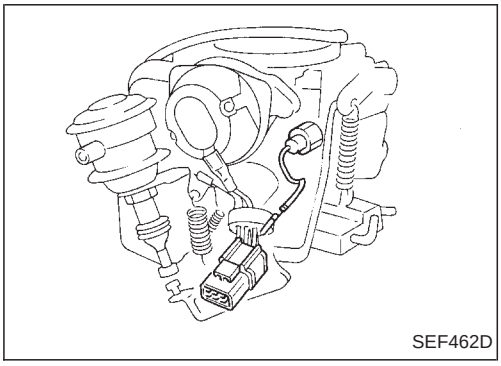
SEF462D

3. If no sound is heard from the fuel cut solenoid valve, replace it with a new one.

1) Disconnect harness from harness connector.
   Refer to "Disassembling Carburetor Harness Connector", EC-224.

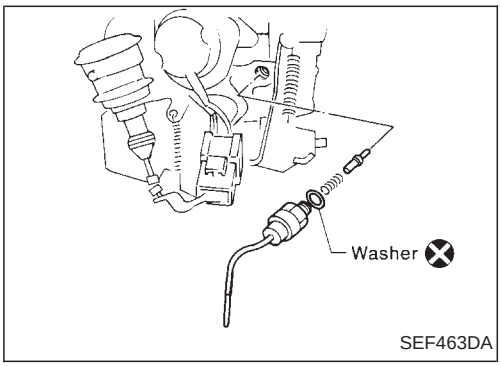

SEF463DA

2) Remove fuel cut solenoid valve from carburetor.
3) Install new fuel cut solenoid valve.

CAUTION:

Always use a new washer.

Fuel cut solenoid valve:

: 12 - 34 N·m (1.2 - 3.5 kg-m, 9 - 25 ft-lb)

After replacement, start engine and check to be certain that fuel is not leaking, and that fuel cut solenoid is in good condition.

ISC-FI Pot

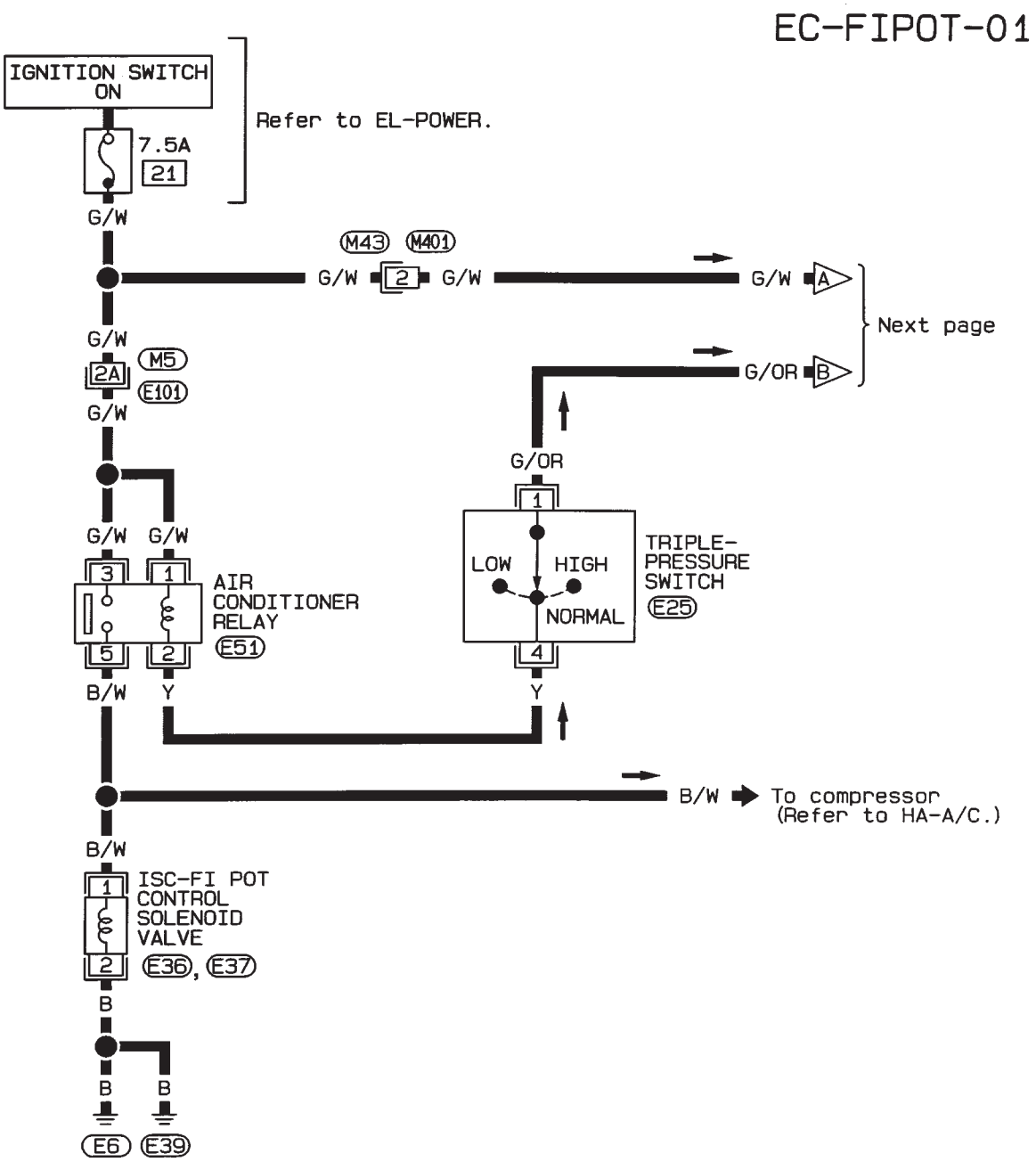

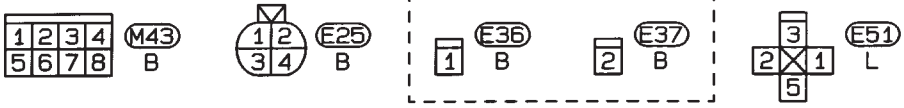

Refer to last page (Foldout page).

M5, E101

HEC398

ISC-FI Pot (Cont'd)

EC-FIPOT-02

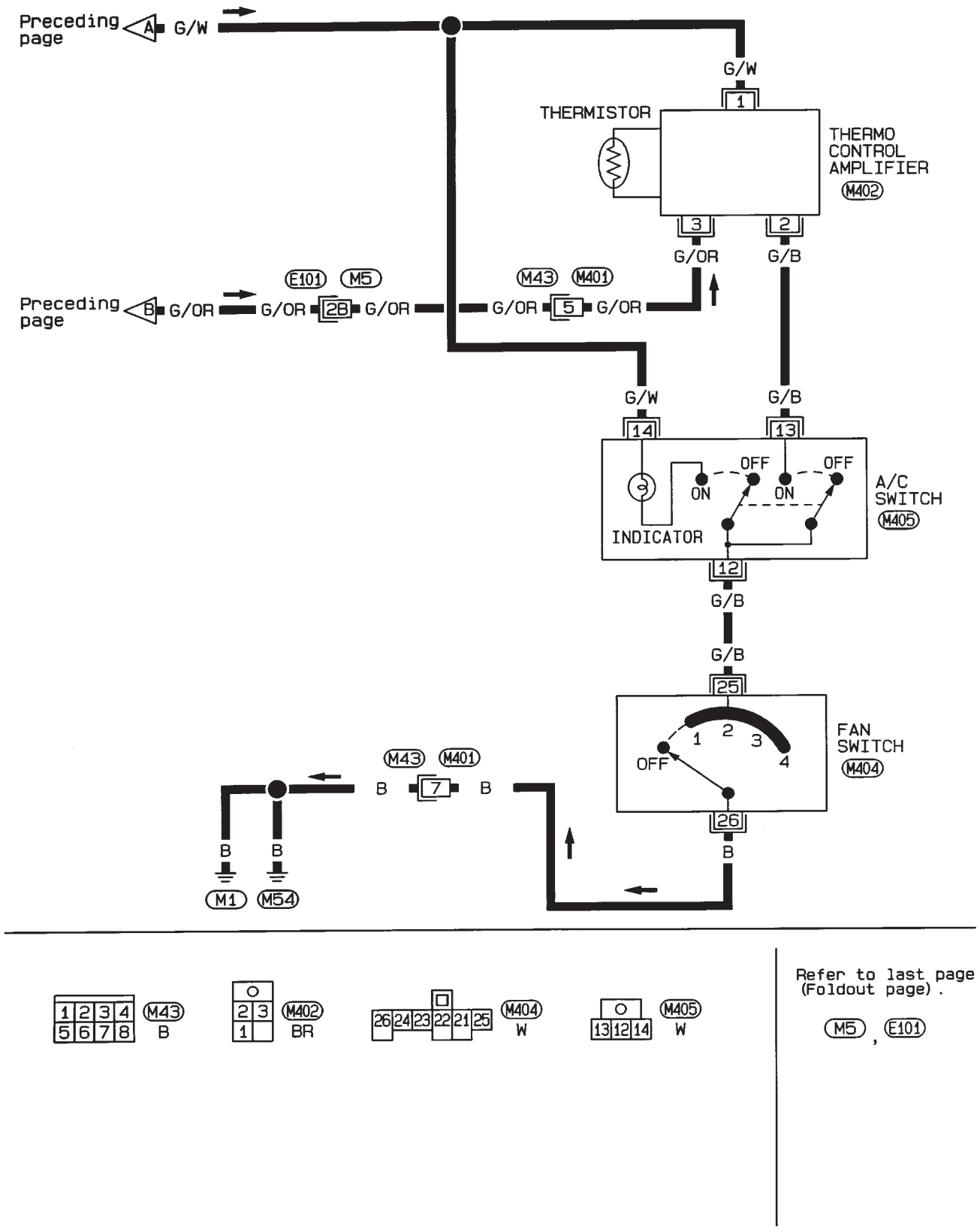

Refer to last page (Foldout page).

M5, E101

HEC399

ISC-FI Pot (Cont'd)

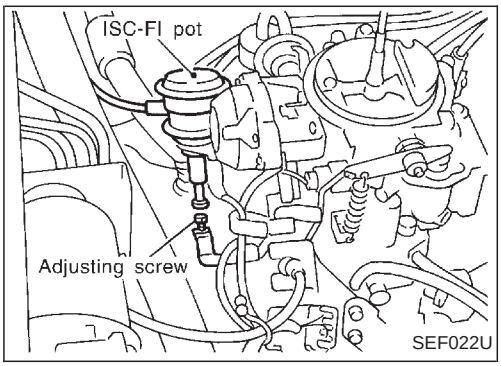

INSPECTION

1. Engine idle speed and mixture ratio must be set properly and engine warmed up sufficiently.
2. Turn throttle valve by hand, and read engine speed when ISC-FI pot just touches stopper lever.
   ISC-FI pot touch speed:
   1,500±200 rpm
3. If out of specifications, adjust it by turning adjusting screw.
4. After adjusting, make sure that engine speed drops smoothly from 2,000 to 1,000 rpm in approximately three seconds.

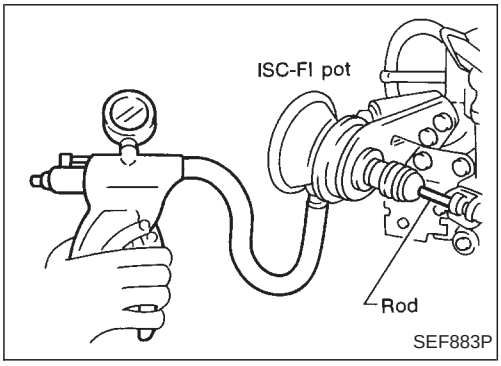

ISC-FI POT

Apply vacuum to ISC-FI pot with a handy vacuum pump.
Rod of ISC-FI pot should pull out.

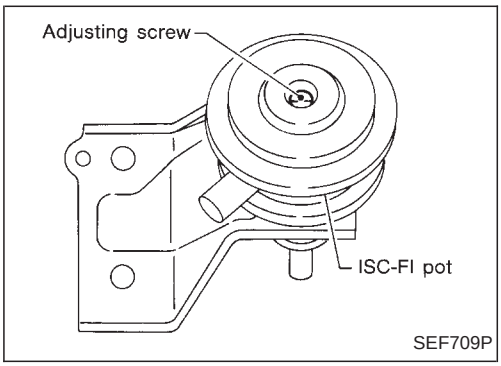

ISC-FI POT ACTUATOR

1. Warm up engine sufficiently.
2. Check idle speed and mixture ratio.
   Idle speed: rpm (in "N" position)
   800±50
   Idle "CO":
   1.5±0.5%
3. Turn air conditioner switch "ON", and check idle speed.
   Idle speed: rpm (in "N" position)
   850±50
4. If out of specification, adjust idle speed by turning adjusting screw.

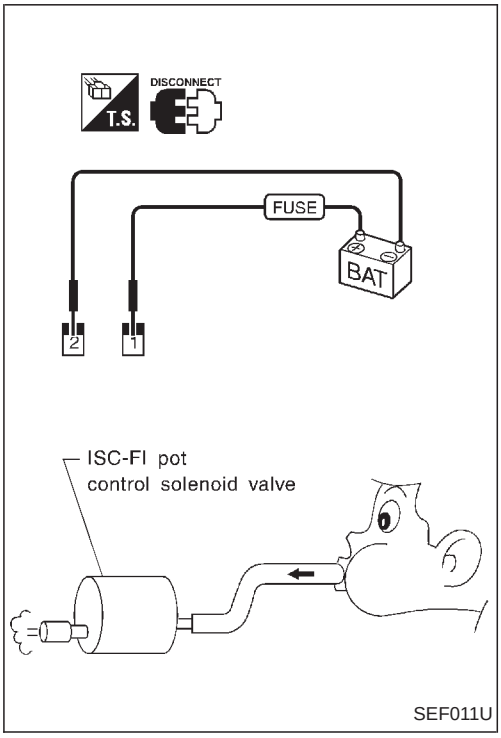

ISC-FI POT CONTROL SOLENOID VALVE

1. Disconnect ISC-FI pot control solenoid valve harness connectors and vacuum hoses.
2. Connect solenoid valve connector to battery and adequate vacuum hoses to the solenoid valve as shown in the figure.
3. Blow air into hose.
   If air flows: OK
   If air does not flow: NG
   If NG, replace ISC-FI pot control solenoid valve.

Description

Electric fuel pump is controlled by fuel pump control module. This module drives electric fuel pump in response to the signals from alternator “L” terminal, ignition switch and oil pressure switch.

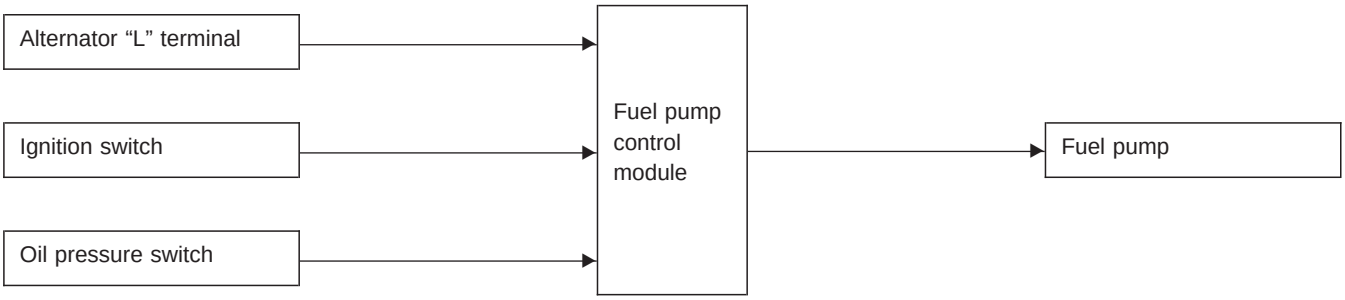

Operation

Ignition switch position	Engine	Alternator	Oil pressure	Fuel pump
OFF	Stopped	Not generating	No pressure	Not operating
ACC				
ON				
START	Cranking		Low pressure	Operating
		Generating		
		Not generating	Normal	
		Generating		
ON	Running	Failure		
		Generating	Failure	

Wiring Diagram — FPCM —

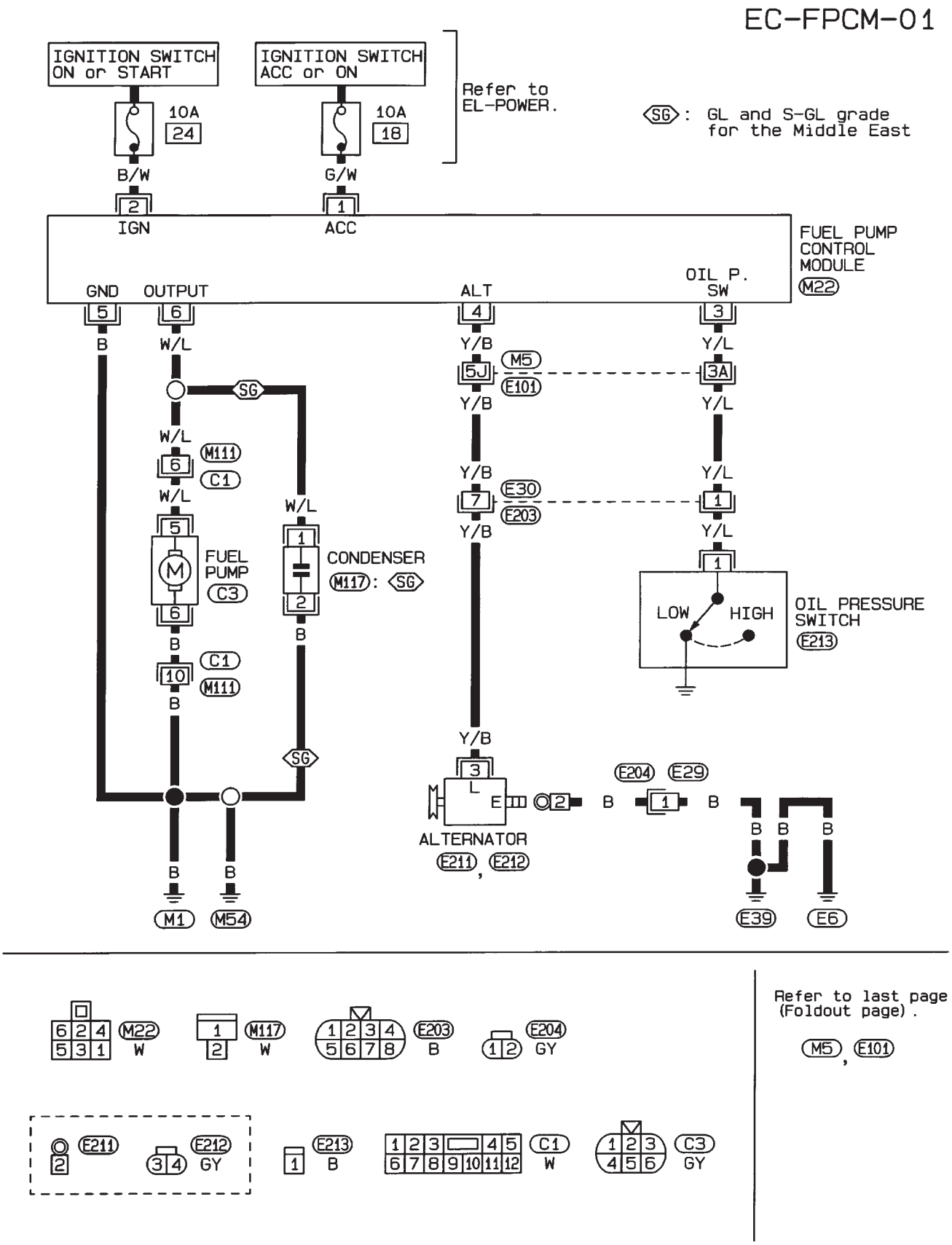

HEC406

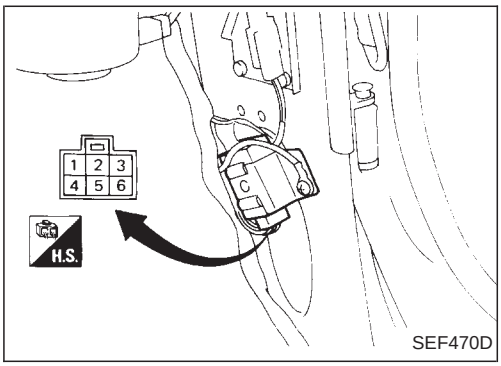

Inspection

Fuel pump control module is located under the right side of dash panel.
Check input signals in each terminal of fuel pump control module, following the table shown below.

INPUT SIGNAL CHECK

Check terminals			Condition	Circuit tester	
	+	−		Range	Reading
Ground	⑥	Body earth	—	Ω	0Ω
Battery (ON or START)	②		Ignition switch “ON”	V	Battery voltage
			Ignition switch “START*”		
Battery (ACC or ON)	④		Ignition switch “ON”		
			Ignition switch “START*”		0V
Alternator “L” terminal	①		Engine running		Battery voltage
			Engine stopped		0V
Oil pressure switch	⑤		Engine running		Battery voltage
			Engine stopped		0V

*: Disconnect starter motor “S” terminal before turning ignition switch “START”.

If NG, check harness continuity between fuel pump control module and each component, or check each component individually. If OK, perform fuel pump control module check.

FUEL PUMP CONTROL MODULE CHECK

- **First, disconnect starter motor “S” terminal.**
- **This check should be performed without starting engine.**

Step	Condition			Output voltage of terminal ③
	Alternator “L” terminal	Oil pressure switch terminal	Ignition switch	
1	Connected	Connected	OFF	0V
2			ACC	
3			ON	
4			START	Battery voltage
5	Disconnected		ON	
6			START	
7		Disconnected	ON	
8			START	
9	Connected		ON	
10			START	

If NG, replace fuel pump control module.

Inspection (Cont'd)

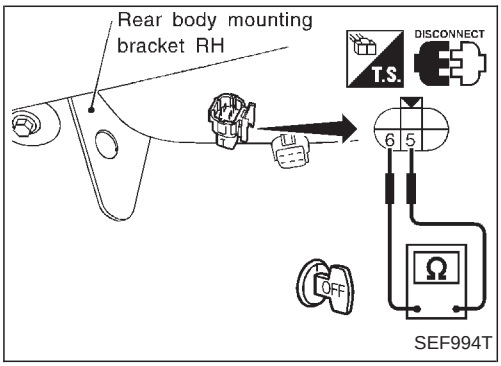

FUEL PUMP

1) Make sure that ignition switch is "OFF".
2) Disconnect fuel pump harness connector.
3) Check resistance between fuel pump connector terminals ⑤ and ⑥ .

   Resistance: Approximately 0.2 - 5Ω

FUEL PRESSURE CHECK

WARNING:

- **Keep flammables away during the test.**
- **For safety, the test must be completed in as short a time as possible.**

1. Connect a suitable fuel pressure gauge.
2. Check fuel pressure.

   Fuel pressure (Approximately):
   17.7 - 23.5 kPa (0.177 - 0.235 bar,
   0.18 - 0.24 kg/cm^2, 2.6 - 3.4 psi)

   If out of specification, check for fuel filter clogging or improper fuel pump operation.

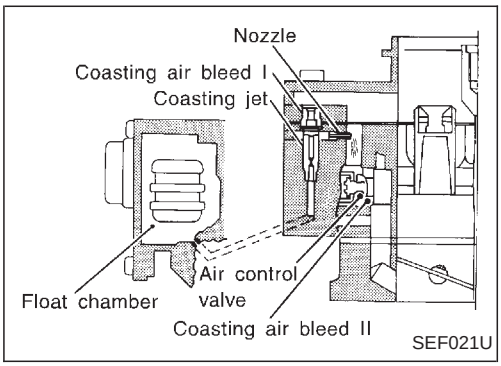

Boost Controlled Deceleration Device (BCDD)

DESCRIPTION

The BCDD serves to reduce HC emission during coasting.
The high manifold vacuum during coasting prevents the complete combustion of the mixture gas due to the reduce amount of mixture gas available.
As a result, an excess amount of HC is emitted into the atmosphere.
When manifold vacuum exceeds the set value, this BCDD operates to supply additional mixture gas of optimum mixture ratio.
Complete combustion of fuel is assisted by this additional mixture, and HC emission are thereby reduced.

OPERATION WITHOUT BCDD CONTROL SOLENOID VALVE

Intake manifold vacuum kPa (mbar, mmHg, inHg)	BCDD operation
Below 78.6 (786, 590, 23.23)	Not actuated
Above 78.6 (786, 590, 23.23)	Actuated

INSPECTION AND ADJUSTMENT

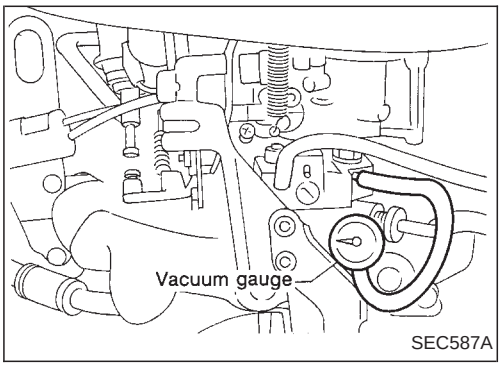

1. Connect vacuum gauge to intake manifold.

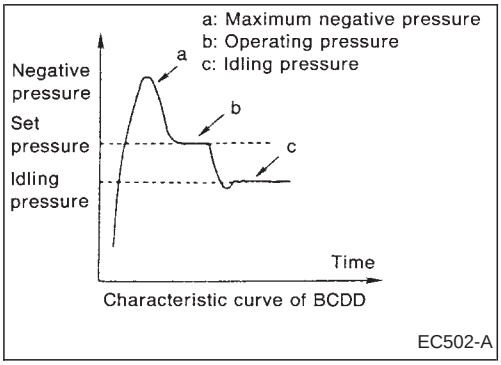

2. Start engine and observe vacuum gauge while engine revving.
3. If BCDD is in good condition, vacuum gauge will follow the pattern shown in the figure at left.

- **Set pressure is shown in step 4.**

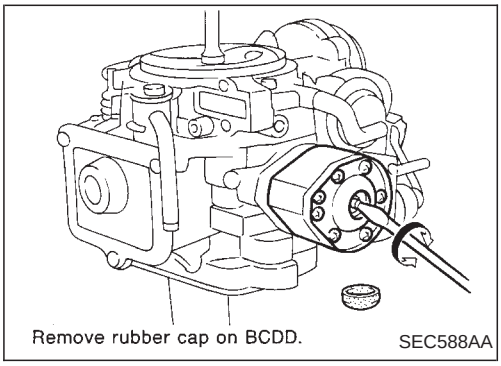

4. If it does not react as described above, adjust operating pressure.

1) Remove rubber cap on BCDD.
2) Revving engine, turn adjusting screw until the specified set pressure is obtained.

BCDD set pressure (at sea level):
−78.6±0.7 kPa (−786±7 mbar,
−590±5 mmHg, −23.23±0.20 inHg)

Boost Controlled Deceleration Device (BCDD) (Cont'd)

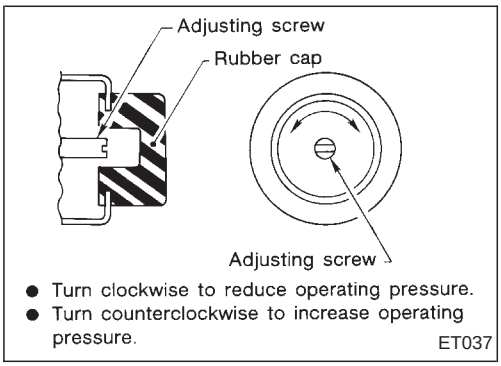

a. Turning adjusting screw one quarter rotation will cause a change in operation pressure of about 2.7 kPa (27 mbar, 20 mmHg, 0.79 inHg).
b. Do not fit tip of screwdriver tightly into screw slot.

Wiring Diagram — IGN —

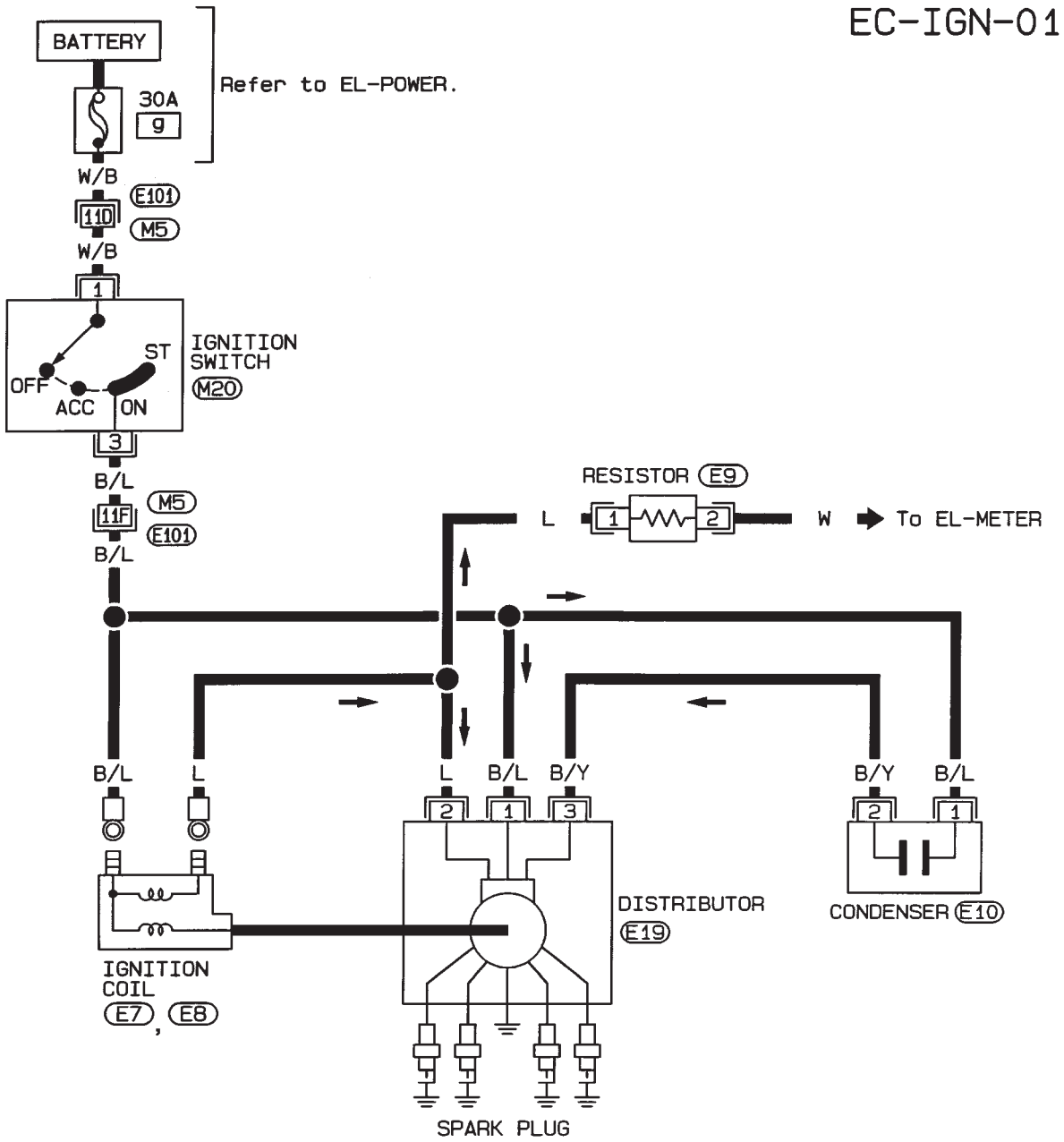

Refer to last page (Foldout page).

M5, E101

HEC386

System Description

Ignition timing is controlled by two systems built into the distributor to meet varying conditions during engine operation:

1) Governor advance system
   Advances ignition timing in response to engine speed.
2) Vacuum advance system
   Advances ignition timing by compensating for combustion speed delay when intake vacuum is high.

Vacuum source	Control vacuum of carburetor
	Intake manifold vacuum

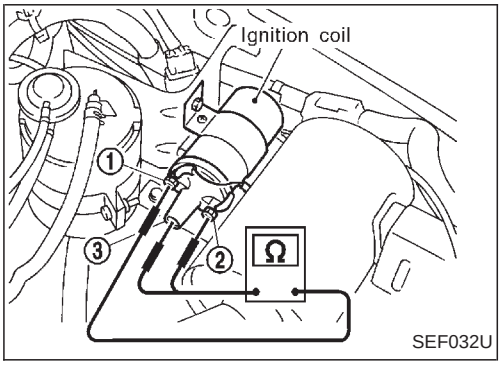

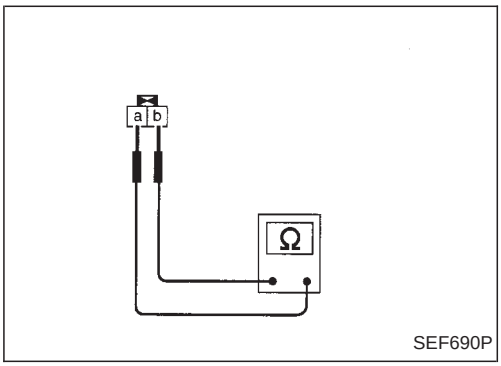

Component Parts Inspection

IGNITION COIL

1. Disconnect ignition coil harness connector.
2. Check resistance as shown in the figure.

Terminal	Resistance
① - ②	Approximately 1Ω
① - ③	Approximately 10 kΩ

If NG, replace ignition coil.

RESISTOR

1. Disconnect resistor harness connector.
2. Check resistance between terminals ⓐ and ⓑ.
   Resistance: Approximately 2.2 kΩ

If NG, replace resistor.

Disassembly

The distributor is not repairable and must be replaced as an assembly except for the distributor cap.

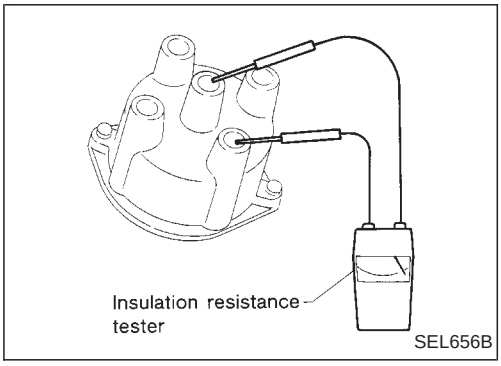

Distributor Component Check

CAP AND ROTOR HEAD

1. Check cap and rotor head for dust, carbon deposits and cracks.
2. Measure insulation resistance between electrodes on ignition coil and spark plug sides on cap.
   Insulation resistance:
   More than 50 MΩ

- Less than specified value ... Replace.

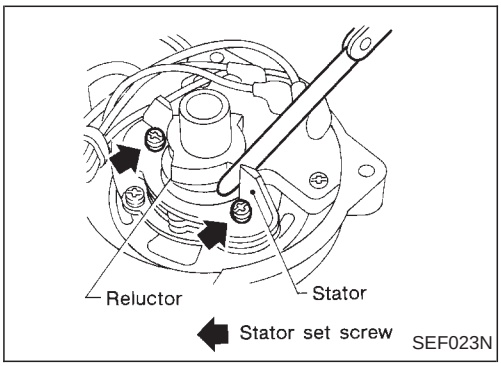

CHECKING AIR GAP

Check air gap between reluctor and stator.

Air gap:
0.25 - 0.5 mm (0.0098 - 0.0197 in)

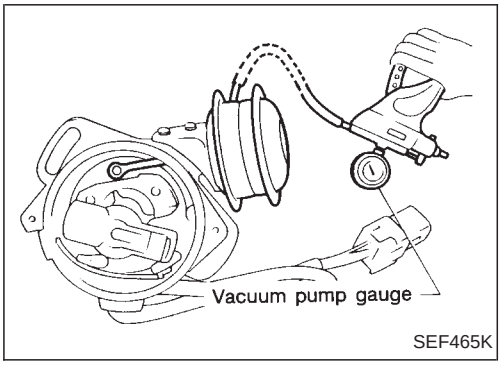

VACUUM ADVANCE

1. Connect vacuum pump gauge to vacuum controller and gradually draw a vacuum while watching breaker plate movement. Check for smooth operation with no evidence of binding.
2. Turn breaker plate right and left to check for freedom of movement.

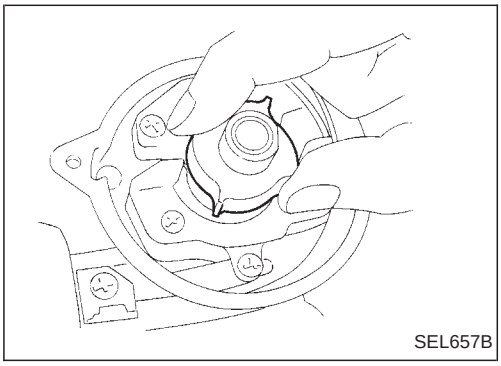

GOVERNOR ADVANCE

Turn head of cam assembly counterclockwise, release it, then check that it returns smoothly to the original position.

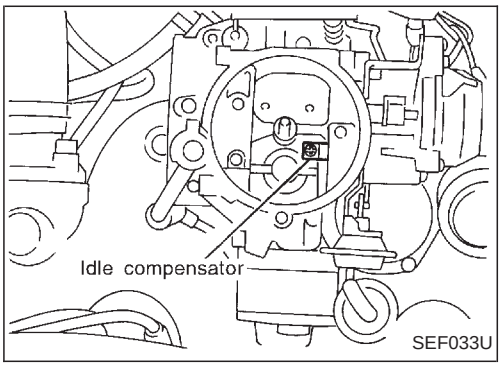

Idle Compensator

The idle compensator is basically a thermostatic valve which introduces air directly from the air cleaner to the intake manifold to compensate for abnormal enrichment of mixture in high idle temperatures and to stabilize the engine.

Inspection

1. Remove air cleaner.
2. Direct warm air to idle compensator with a heat gun.
   And measure operating temperature of idle compensator.

- **Place thermometer as close as possible to idle compensator sensor.**

3. Idle compensator is in good condition if airflow opens idle compensator when it reaches operating temperature.

- **Take care not to bend or damage bimetals of idle compensator.**

Idle compensator opening temperature

Intake air temperature °C (°F)	Bimetal function
Below 60 (140)	Fully closed
60 - 75 (140 - 167)	Closed or open
Above 75 (167)	Fully open

Description

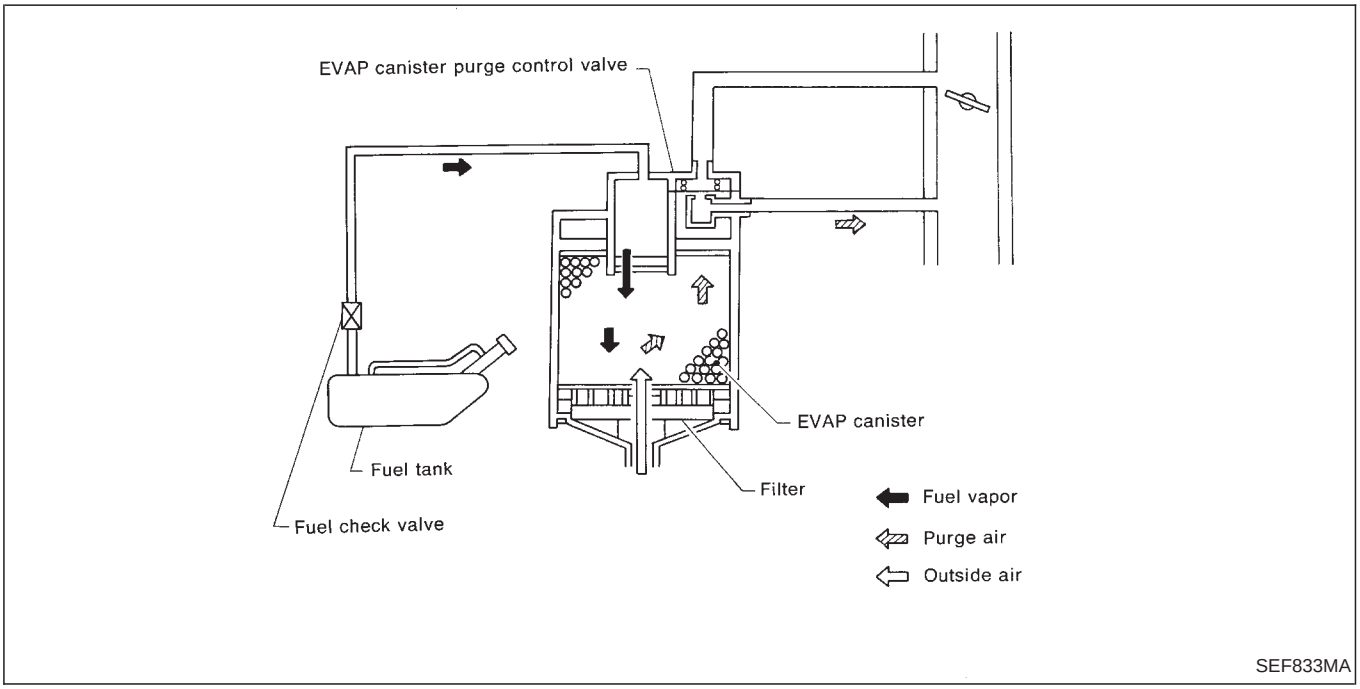

The evaporative emission control system is used to reduce hydrocarbons emitted into the atmosphere from the fuel system. This reduction of hydrocarbons is accomplished by activated charcoals in the EVAP canister.
The fuel vapor from sealed fuel tank is led into the EVAP canister when the engine is off. The fuel vapor is then stored in the EVAP canister. The EVAP canister retains the fuel vapor until the EVAP canister is purged by air.
When the engine is running, the air is drawn through the bottom of the EVAP canister. The fuel vapor will then be led to the intake manifold.

Inspection

EVAP CANISTER

Check EVAP canister as follows:

1. Blow air in port Ⓐ and ensure that there is no leakage.
2.
- Apply vacuum to port Ⓐ. [Approximately −13.3 to −20.0 kPa (−133 to −200 mbar, −100 to −150 mmHg, −3.94 to −5.91 inHg)]
- Cover port Ⓓ with hand.
- Blow air in port Ⓒ and ensure free flow out of port Ⓑ.

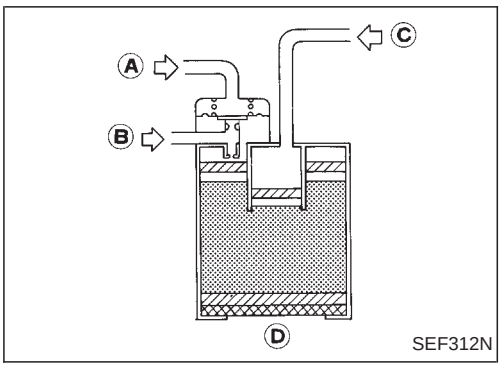

FUEL TANK VACUUM RELIEF VALVE

1. Wipe clean valve housing and have it.
2. Inhale air. A slight resistance accompanied by valve indicates that valve is in good mechanical condition. Note also that, by further inhaling air, the resistance should be disappeared with valve clicks.
3. If valve is clogged, or if no resistance is felt, replace cap as an assembled unit.

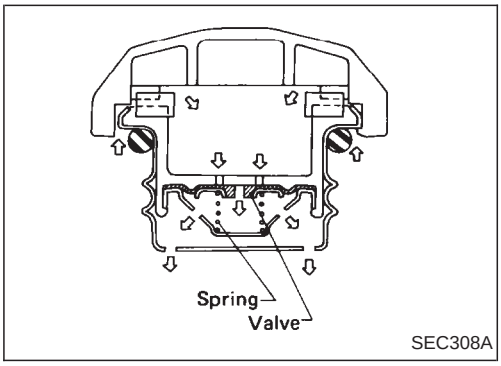

Inspection (Cont'd)

FUEL CHECK VALVE

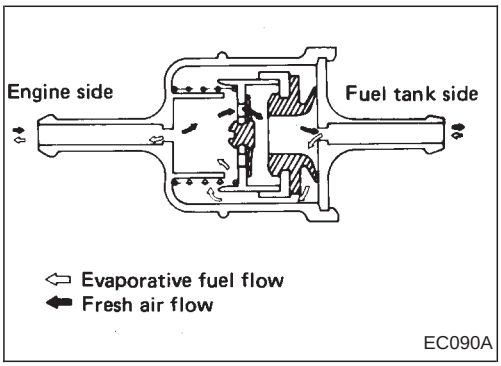

1. Blow air through connector on fuel tank side.
   A considerable resistance should be felt at the mouth and a portion of air flow be directed toward the engine.
2. Blow air through connector on engine side.
   Air flow should be smoothly directed toward fuel tank.
3. If fuel check valve is suspected of not being properly functioning in steps 1 and 2 above, replace.

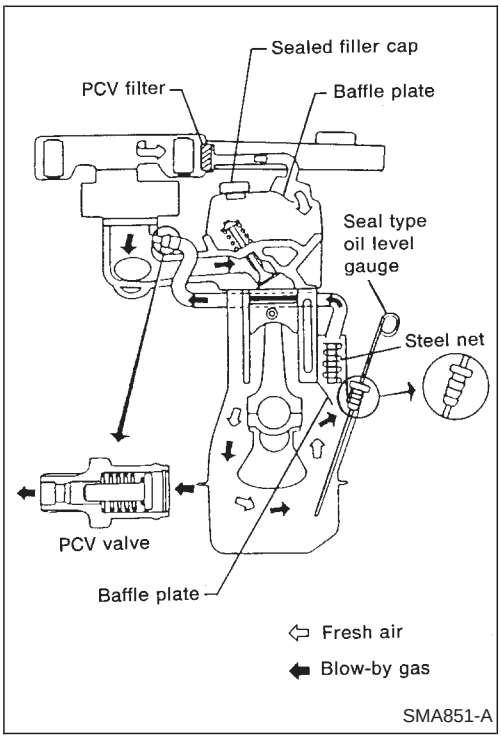

Description

This system returns blow-by gas to both the intake manifold and air cleaner.
The positive crankcase ventilation (PCV) valve is provided to conduct crankcase blow-by gas to the intake manifold.
During partial throttle operation of the engine, the intake manifold sucks the blow-by gas through the PCV valve.
Normally, the capacity of the valve is sufficient to handle any blow-by and a small amount of ventilating air.
The ventilating air is then drawn from the air cleaner, through the hose connecting air cleaner to rocker cover, into the crankcase.
Under full-throttle condition, the manifold vacuum is insufficient to draw the blow-by flow through the valve, and its flow goes through the hose connection in the reverse direction.
On vehicles with an excessively high blow-by some of the flow will go through the hose connection to the air cleaner under all conditions.

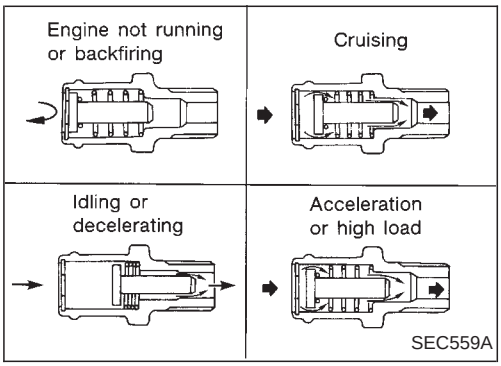

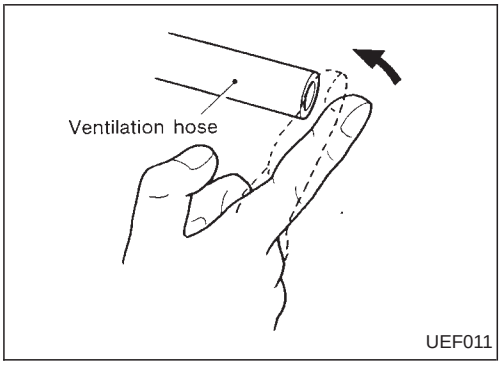

Inspection

PCV (Positive Crankcase Ventilation) VALVE

With engine running at idle, remove ventilation hose from rocker cover. A property working valve makes a hissing noise as air passes through it. A strong vacuum should be felt immediately when a finger is placed over hose inlet.

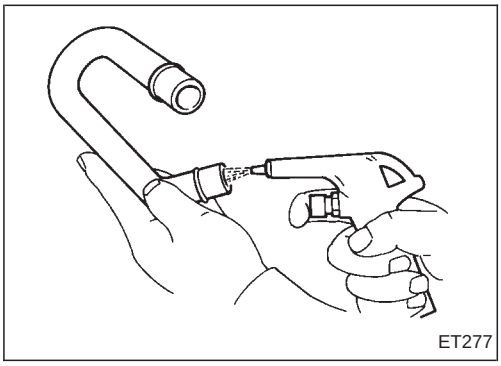

VENTILATION HOSE

1. Check hoses and hose connections for leaks.
2. Disconnect all hoses and clean with compressed air. If any hose cannot be freed of obstructions, replace.

CAUTION:

- **Disassembly and assembly of the injection pumps should be done only in service shops authorized by NISSAN or by the pump manufacturer.**
- **The pump tester is required for servicing the pump.**
- **Before removing fuel injection pump from vehicle, check closely to make sure that it is definitely malfunctioning.**

Fuel System

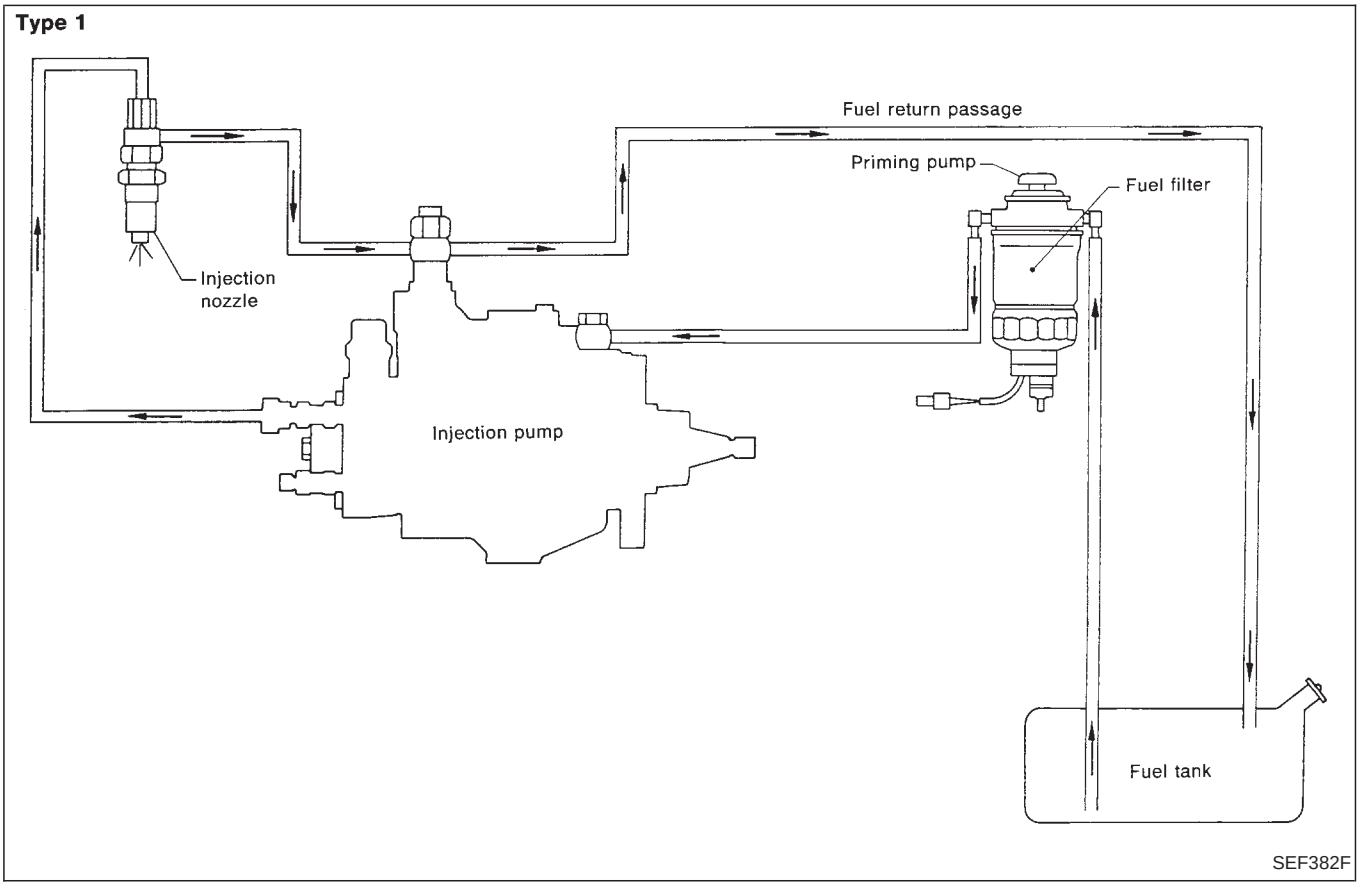

Fuel System (Cont'd)

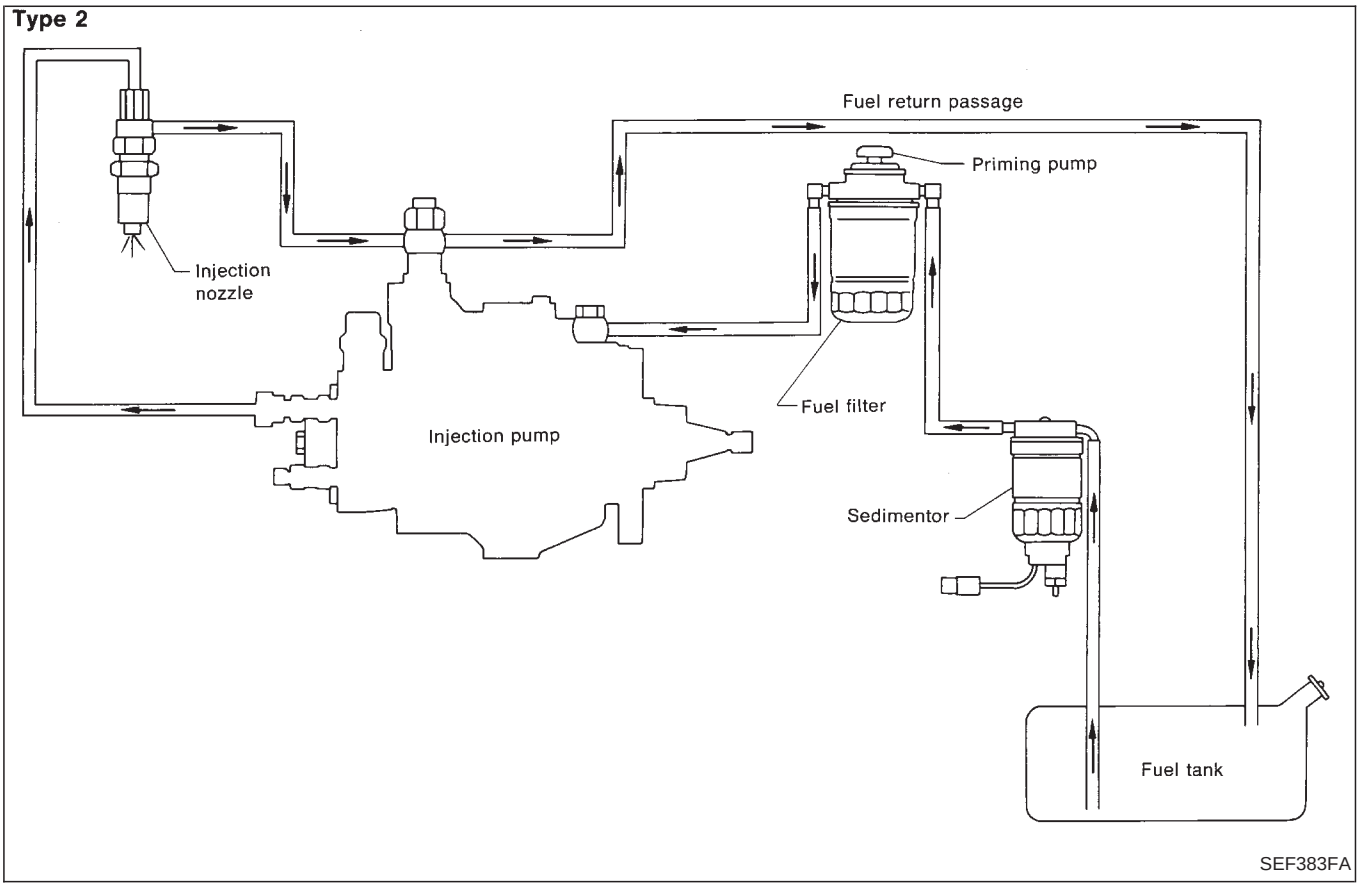

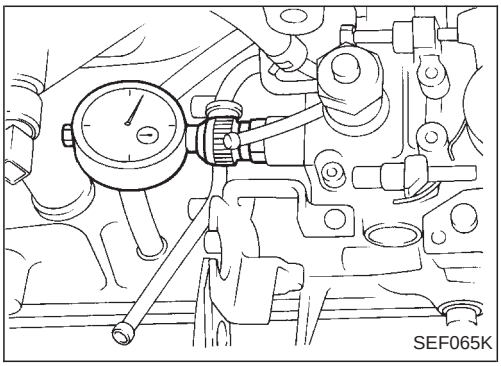

Inspection

PLUNGER LIFT INSPECTION

1. Remove injection tubes.
2. Remove plug bolt from distributor head and install dial gauge.
3. Plunger lift measurement

(1) Turn crankshaft counterclockwise 20 to 25 degrees from No. 1 piston at TDC.
(2) Find dial gauge's needle rest position at step (1) set position, then set the gauge to zero.
(3) Turn crankshaft clockwise until No. 1 piston is set at TDC.
(4) Read dial gauge indication.

QD32:
0.42±0.05 mm (0.0165±0.0020 in)
TD27:
For Australia
0.71±0.05 mm (0.0280±0.0020 in)
For Hong Kong
0.51±0.05 mm (0.0201±0.0020 in)
Except for the above
0.65±0.05 mm (0.0256±0.0020 in)

(5) If it is not within the above range, adjust it within adjustment standard range.

Refer to EC-259.

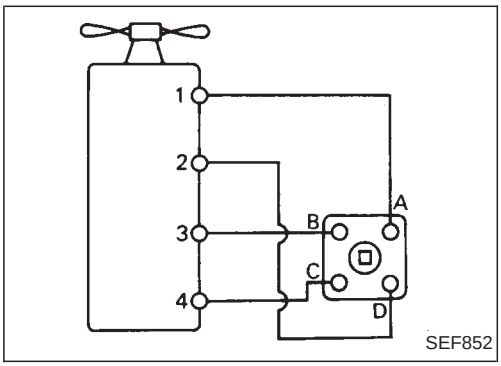

4. Disconnect dial gauge and reinstall plug bolt with new washer.
   : 14 - 20 N·m (1.4 - 2.0 kg-m, 10 - 14 ft-lb)
5. Connect injection tubes.
   Flare nut:
   : 20 - 25 N·m (2.0 - 2.5 kg-m, 14 - 18 ft-lb)
6. Bleed air from fuel system.
   Refer to EC-268.

INJECTION PUMP CALIBRATION

Calibrate injection pump on injection pump tester.
Refer to "Injection Pump Calibration Standard" in SDS, EC-311.

Removal

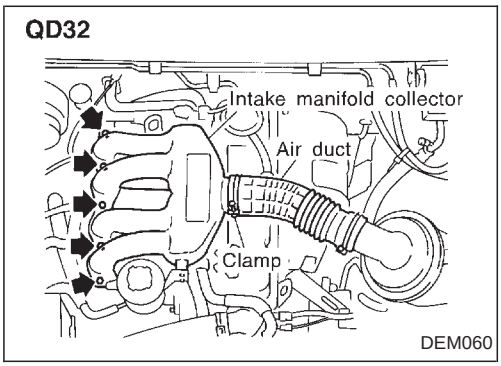

1. Disconnect air duct and intake manifold collector (QD32) or air intake housing (TD27).

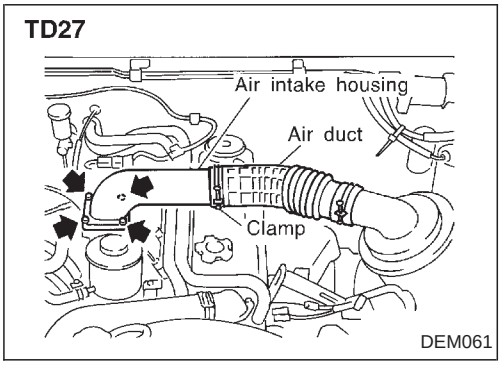

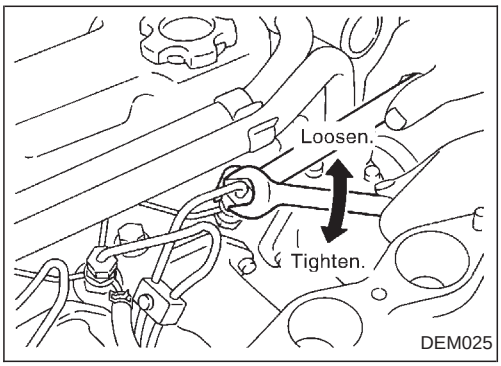

2. Remove injection tube.
Cover the injection nozzle assembly with a plug to prevent dust entry.

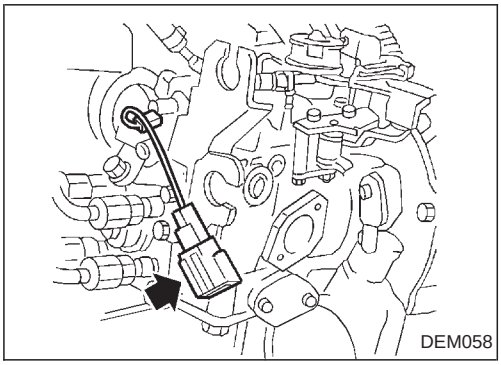

3. Disconnect fuel cut solenoid wire connector.

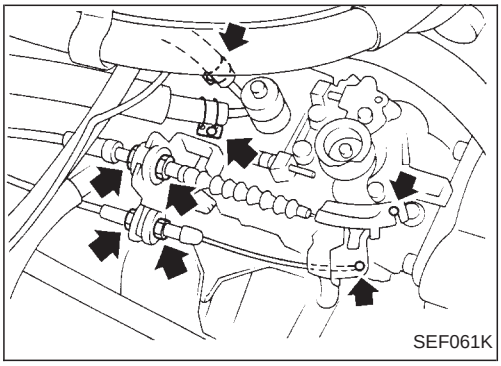

4. Remove accelerator wire and disconnect overflow hose, fuel inlet hose and fuel return hose.

Removal (Cont'd)

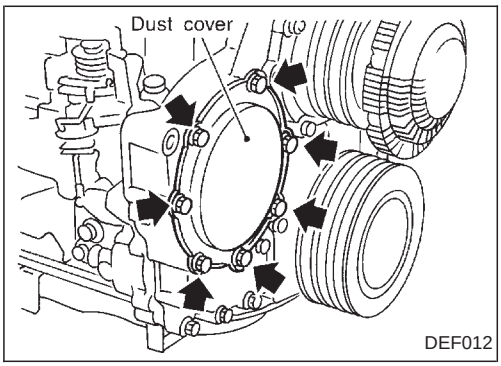

5. Remove injection pump drive gear cover.

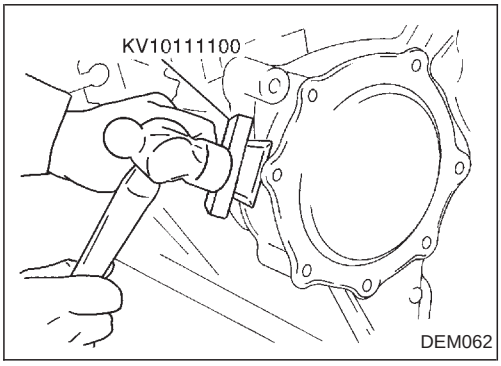

6. Loosen injection pump drive gear nut and remove drive gear by using puller.

7. Remove vacuum pump.
- Remove the eye bolt securing the oil tube. Remove the vacuum pump. Be careful not to bend the oil tube during vacuum pump removal.

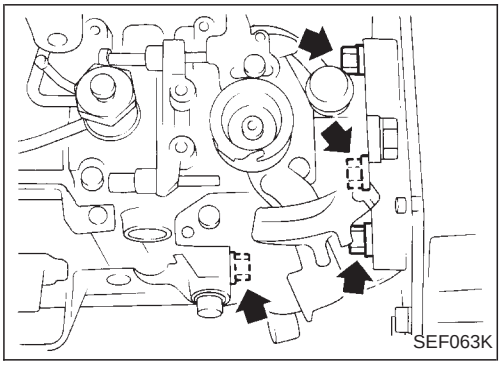

8. Remove injection pump fixing nuts and bolts.

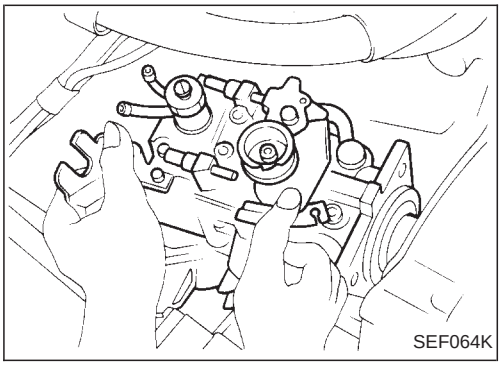

9. Remove injection pump with injection tubes.
Disconnect injection tube from pump once it is removed.

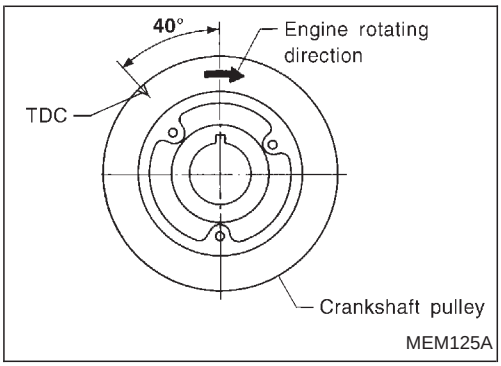

Installation and Adjustment

1. Confirm that No. 1 piston is set at TDC on its compression stroke.

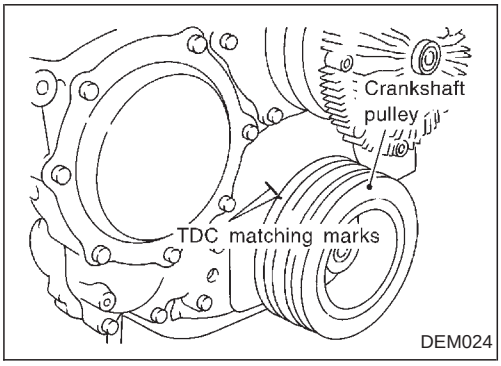

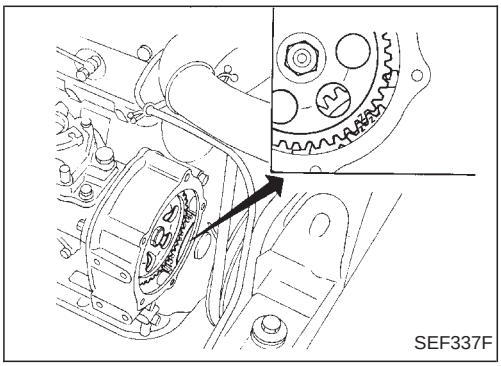

2. Install injection pump.
(1) Temporarily set injection pump so that the flange of pump is aligned with aligning mark on front cover.
(2) Install injection drive gear over the key.
: 59 - 69 N·m (6 - 7 kg-m, 43 - 51 ft-lb)

Coat key with grease to prevent it from falling into the front cover. Make sure that "Z" marks are aligned.

(3) Install drive gear cover while applying a continuous bead of liquid gasket.

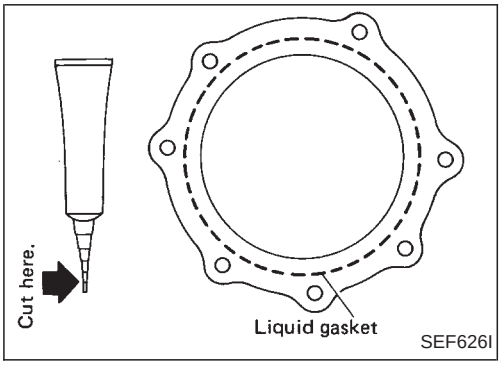

- **Be sure liquid gasket is 2.5 to 3.5 mm (0.098 to 0.138 in) wide.**
- **Attach timing gear case cover to timing gear case within 5 minutes after coating.**
- **Wait at least 30 minutes before refilling engine oil.**
- **Use Genuine Liquid Gasket or equivalent.**

Installation and Adjustment (Cont'd)

PLUNGER LIFT ADJUSTMENT

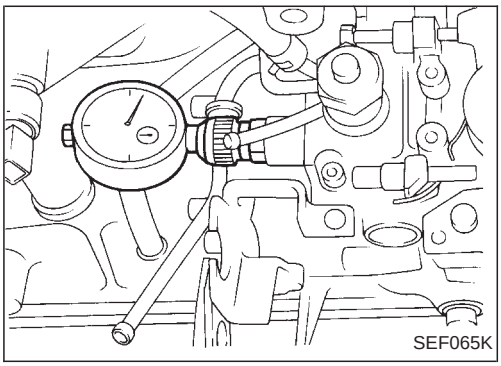

1. Loosen injection pump mounting nuts and mounting bracket bolt.
2. Remove plug bolt from distributor head and install dial gauge.
3. Plunger lift measurement and adjustment
(1) Turn crankshaft counterclockwise 20 to 25 degrees from No. 1 piston at TDC.
(2) Find dial gauge's needle rest position at step (1) set position, then set the gauge to zero.
(3) Turn crankshaft clockwise until No. 1 piston is set at TDC.
(4) Read dial gauge indication.
QD32:
0.42±0.02 mm (0.0165±0.0008 in)
TD27:
For Australia
0.71±0.02 mm (0.0280±0.0008 in)
For Hong Kong
0.51±0.02 mm (0.0201±0.0008 in)
Except for the above
0.65±0.02 mm (0.0256±0.0008 in)
(5) If it is not within the above range, turn pump body until it comes within standard range.
a. If indication is smaller than the specified value, turn pump body counterclockwise.
b. If indication is larger than the specified value, turn pump body clockwise.
4. Tighten injection pump securely.
Injection pump fixing bolt:
: 20 - 25 N·m (2.0 - 2.5 kg-m, 14 - 18 ft-lb)
Injection pump to mounting bracket:
: 30 - 41 N·m (3.1 - 4.2 kg-m, 22 - 30 ft-lb)

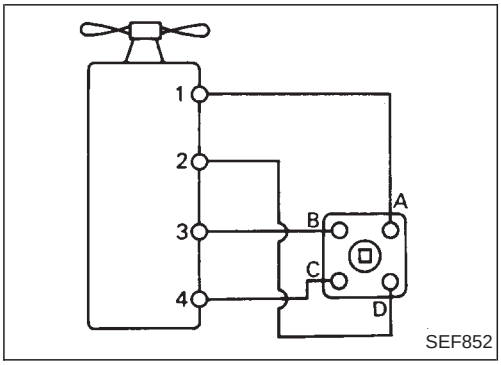

5. Disconnect dial gauge and reinstall plug bolt with new washer.
: 14 - 20 N·m (1.4 - 2.0 kg-m, 10 - 14 ft-lb)
6. Connect injection tubes.
Flare nut:
: 20 - 25 N·m (2.0 - 2.5 kg-m, 14 - 18 ft-lb)
7. Bleed air from fuel system.
Refer to EC-268.

IDLE AND MAXIMUM SPEED ADJUSTMENT

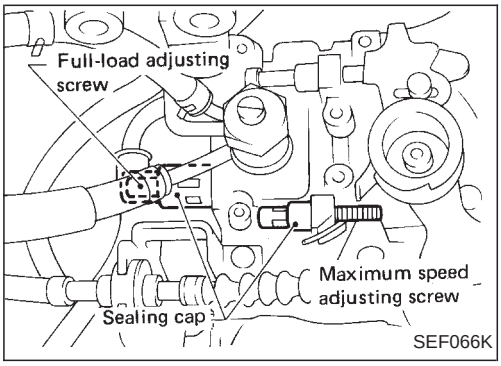

CAUTION:
- **Do not remove sealing wires unless absolutely necessary.**
- **Disturbing full-load adjusting screw will change fuel flow characteristics, resulting in an improperly adjusted engine. Readjustment of fuel injection pump should be done using a pump tester.**
- **If maximum speed adjusting screw is turned in direction that increases control lever angle, engine damage may result.**

Installation and Adjustment (Cont'd)

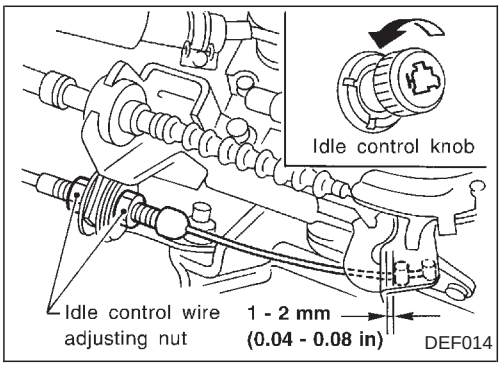

Throttle control wire adjustment

1. Turn idle control knob fully counterclockwise.
2. Make sure that clearance between idle control lever pin and fuel injection pump control lever is within the specified range.
   Clearance:
   1 - 2 mm (0.04 - 0.08 in)
3. If not within the specified range, adjust with idle control wire adjusting nut.
4. After adjusting clearance, tighten lock nut.

Idle adjustment

Refer to "Checking Idle Speed", "ENGINE MAINTENANCE" in MA section.

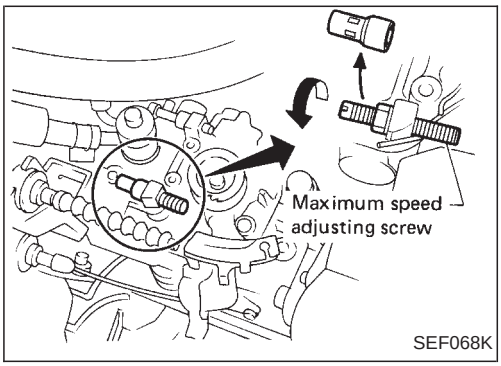

Maximum speed adjustment

Maximum speed adjusting screw is retained by sealing wire and need not be adjusted under normal circumstances. However, if it becomes necessary to adjust it, the following procedure should be followed:

1. Start engine and warm it up until coolant temperature indicator points to middle of gauge.
2. Connect tachometer's pick-up to No. 1 fuel injection tube.

To obtain accurate reading of engine rpm, remove clamps that secure No. 1 fuel injection tube.

3. Depress accelerator pedal fully under no load and, at this point, read the tachometer indication.
   Maximum engine speed (Under no load):
   QD32
   4,700±100 rpm
   TD27
   $5{,}100^{+50}_{-150}$ rpm

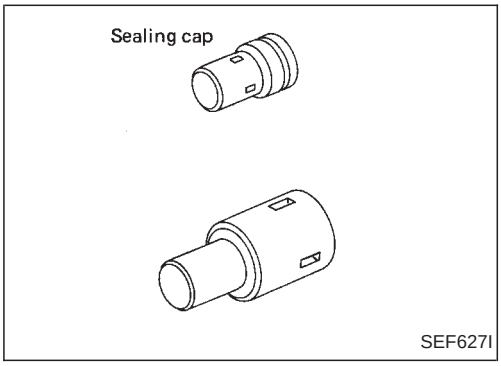

4. If indication is lower than specified maximum engine speed, turn maximum speed adjusting screw counterclockwise 1 or 2 rotations. Then depress accelerator pedal to floor under no load and, at this point, read indication.
5. If indication is still lower than specified speed, repeat step 4 above until specified engine speed is reached.
6. After adjustment, tighten lock nut securely.
7. Seal with a sealing wire or install a sealing cap.

Disassembly

Refer to "VE INJECTION PUMP" in EF section of Service Manual for TD series diesel engine (1st Revision).

Load Timer Adjustment

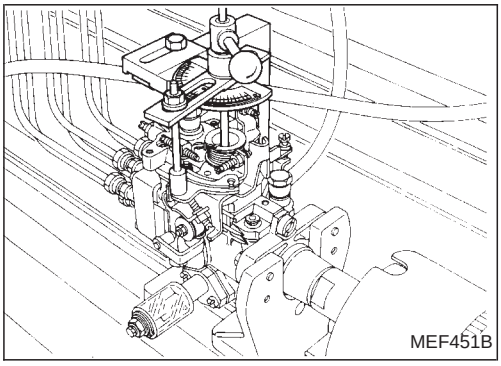
MEF451B

1. After adjusting the timer stroke, find the control lever position where the injection quantity is as specified and then fix the control lever using the adjusting device (KV11282617).

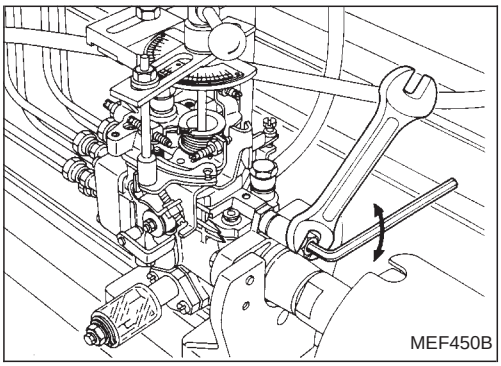
MEF450B

2. Run the injection pump at the specified speed and then adjust the governor shaft installation position so that the timer stroke is as specified.
   Refer to "Injection Pump Calibration Standard" in SDS for the timer stroke.

Start Q Adjustment Lever

DISASSEMBLY

1. Attach injection pump to bracket using two bolts.
2. Remove start Q adjustment lever by removing nut after marking the installation position.
3. Remove nut and washer from the tip of lever shaft and then remove start Q adjustment lever, spring, washer and O-ring.
4. Remove lever shaft and washer from the inside of governor cover.

INSPECTION

1. Check that lever shaft's sliding surface is not worn, scratched or damaged excessively and that lever shaft's flange is not bent, worn or damaged excessively.
   Replace lever shaft it defective.
2. Inspect the other parts carefully. If they are damaged, worn, rusted or bent excessively they must be replaced.

Start Q Adjustment Lever (Cont'd)

REASSEMBLY

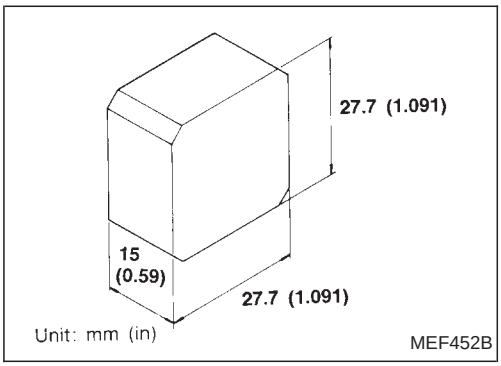

During reassembly of a fuel injection pump equipped with start Q adjustment lever, a block gauge must be used to determine the start Q adjustment lever installation position.

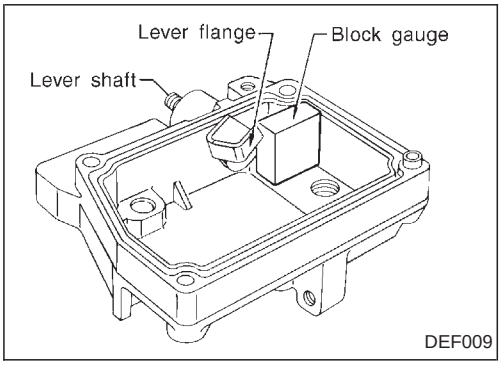

1. Using block gauge, ensure that the distance from the inside face of cover to the tip of lever flange is 27.7 mm (1.091 in). Maintain lever shaft in this position.

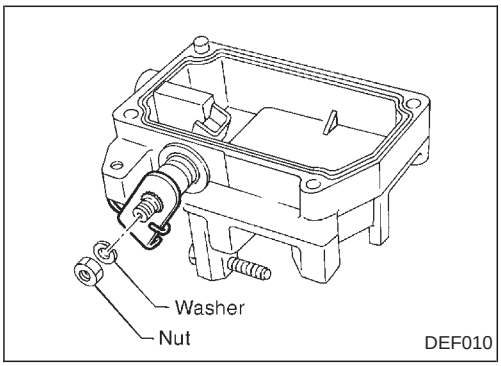

2. Install start Q adjustment lever on lever shaft so that start Q adjustment lever contacts (or almost contacts) the under side of the adjusting bolt base.
   Then, fix start Q adjustment lever on lever shaft using washer and nut.

If start Q adjustment lever cannot be installed as described above, use start Q adjustment lever with differently phased serrations.

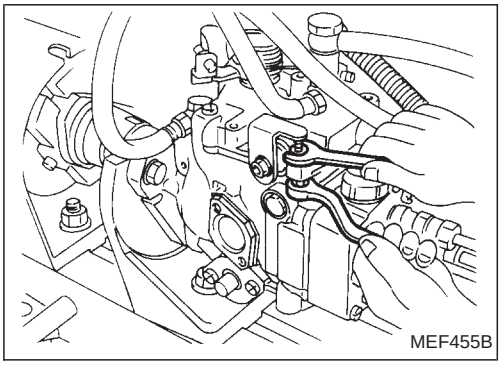

ADJUSTMENT

Adjust adjusting bolt on the normal operating side so that the starting injection quantity is as specified.
Refer to "Injection Pump Calibration Standard" in SDS for the starting injection quantity.

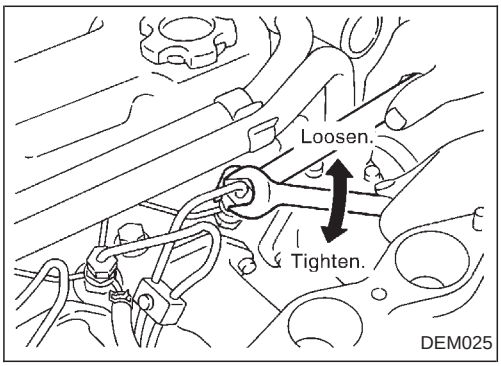

Removal and Installation

1. Remove injection tube assembly.
2. Remove spill tube assembly.

To prevent spill tube from breaking, remove it by gripping nozzle holder.

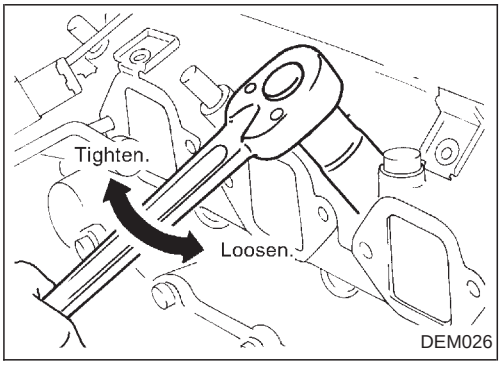

3. Remove injection nozzle assembly using deep socket wrench.
4. Install injection nozzle in the reverse order of removal.

   Injection nozzle to cylinder head:
   : 54 - 64 N·m (5.5 - 6.5 kg-m, 40 - 47 ft-lb)
   Spill tube nut:
   : 29 - 39 N·m (3.0 - 4.0 kg-m, 22 - 29 ft-lb)
   Injection tube flare nut:
   : 20 - 25 N·m (2.0 - 2.5 kg-m, 14 - 18 ft-lb)

a. Nozzle gaskets should always be replaced.
b. To prevent spill tube from breaking later, spill tube nuts should be tightened gradually in sequence.

5. Bleed air from fuel system.

Refer to “Bleeding Fuel System”, EC-268.

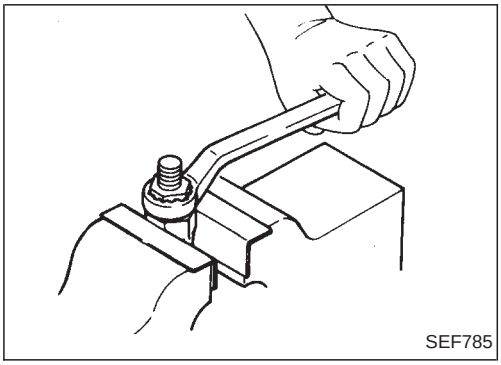

Disassembly

1. Loosen inlet connector while keeping nozzle top from turning.

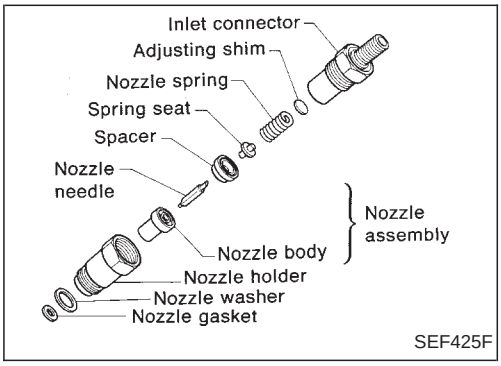

2. Arrange all disassembled parts in order shown at left.

Inspection

Thoroughly clean all disassembled parts with fresh kerosene or solvent.

- If nozzle needle is damaged or fused, replace nozzle assembly with a new one.
- If end of nozzle needle is seized or excessively discolored, replace nozzle assembly.
- Check nozzle body and distance piece for proper contact. If excessively worn or damaged, replace nozzle assembly or nozzle holder assembly.
- Check spacer and nozzle holder for proper contact. If excessively worn or damaged, replace spacer or nozzle holder.
- Check nozzle spring for excessive wear or damage. If excessively worn or damaged, replace it with a new spring.

Cleaning

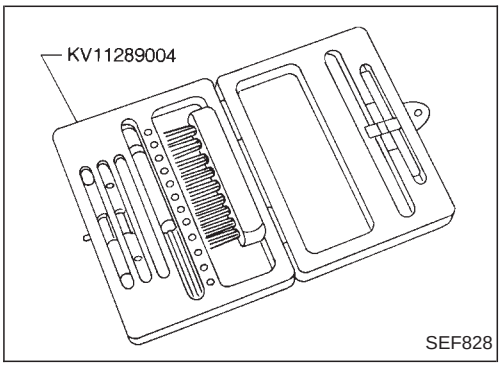

a. Do not touch the nozzle mating surface with your fingers.
b. To wash the nozzles, use a wooden stick and brass brush with clean diesel fuel.

1. Clean nozzle assembly using the Nozzle Cleaning Kit.

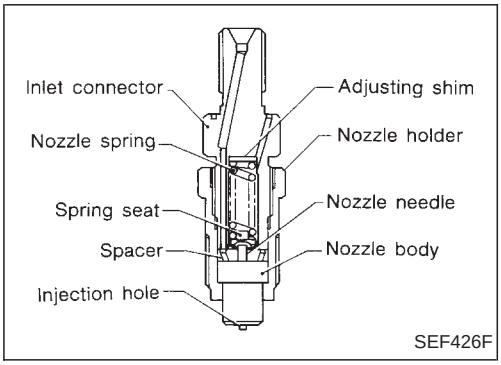

2. Portions which should be cleaned are indicated in the left figure.

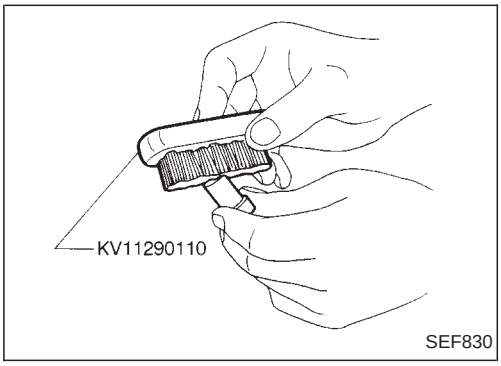

3. Remove any carbon from exterior of nozzle body (except wrapping angle portion) by using Tool.

Cleaning (Cont'd)

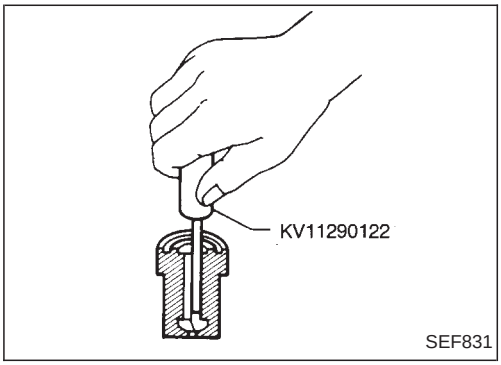

4. Clean fuel sump of nozzle body using Tool.

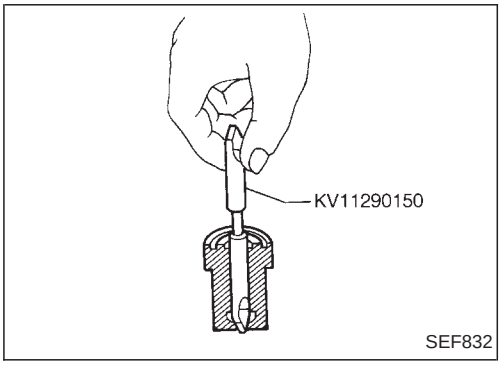

5. Clean nozzle seat by using Tool.
This job should be performed with extra precautions, since efficiency of nozzle depends greatly on a good nozzle seat.

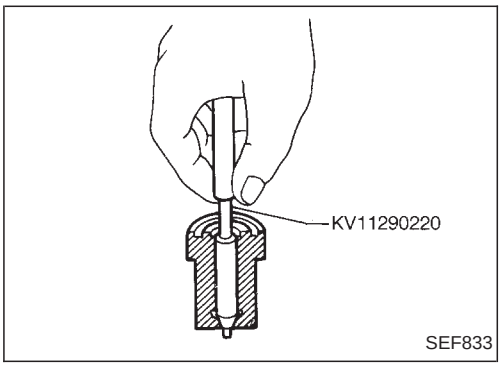

6. Clean spray hole of nozzle body by using Tool.
To prevent spray hole from canting, always clean it by starting with inner side and working towards outside.

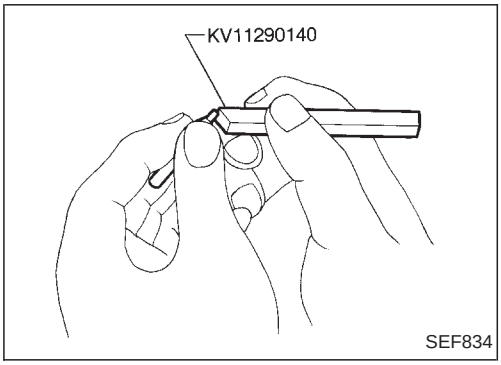

7. Decarbon nozzle needle tip by using Tool.

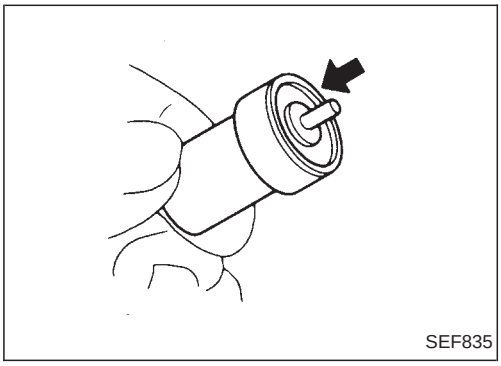

8. Check needle for proper position.
(1) Pull needle about halfway out from body and then release it.
(2) Needle should sink into body very smoothly from just its own weight.
(3) Repeat this test and rotate needle slightly each time.
If needle fails to sink smoothly from any position, replace both needle and body as a unit.

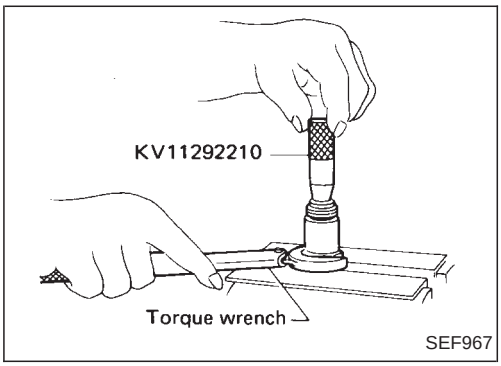

Assembly

Assemble in the reverse order of disassembly.

Inlet connector to nozzle holder:
: 29 - 49 N·m (3.0 - 5.0 kg-m, 22 - 36 ft-lb)

Test and Adjustment

WARNING:
When using nozzle tester, be careful not to allow diesel fuel sprayed from nozzle to contact your hand or body, and make sure your eyes are properly protected with goggles.

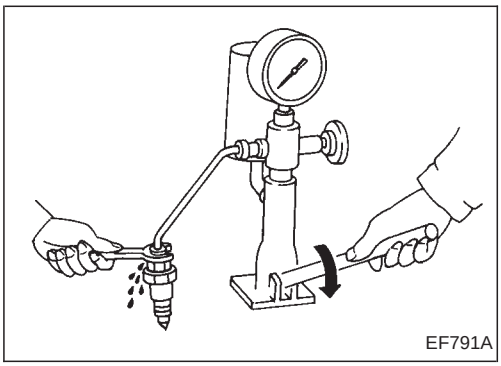

INJECTION PRESSURE TEST

1. Install nozzle to injection nozzle tester and bleed air from flare nut.

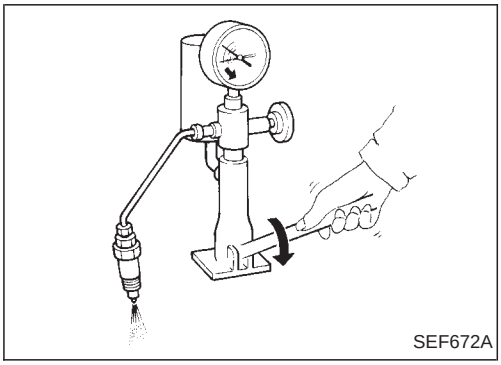

2. Pump the tester handle slowly (one time per second) and watch the pressure gauge.
3. Read the pressure gauge when the injection pressure just starts dropping.

Initial injection pressure:

Used	**9,807 - 10,297 kPa (98.1 - 103.0 bar, 100 - 105 kg/cm^2, 1,422 - 1,493 psi)**
New	**10,297 - 11,278 kPa (103.0 - 112.8 bar, 105 - 115 kg/cm^2, 1,493 - 1,635 psi)**

Always check initial injection pressure using a new nozzle.

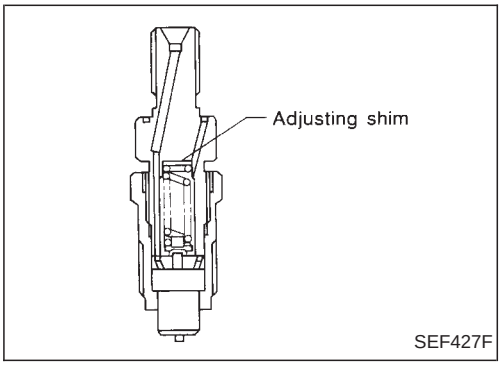

4. To adjust injection pressure, change adjusting shims.

a. Increasing the thickness of adjusting shims increases initial injection pressure. Decreasing thickness reduces initial pressure.

b. A shim thickness of 0.04 mm (0.0016 in) corresponds approximately to a difference of 471 kPa (4.71 bar, 4.8 kg/cm^2, 68 psi) in initial injection pressure.

Refer to “Injection Nozzle” in SDS for adjusting shims, EC-310.

Test and Adjustment (Cont'd)

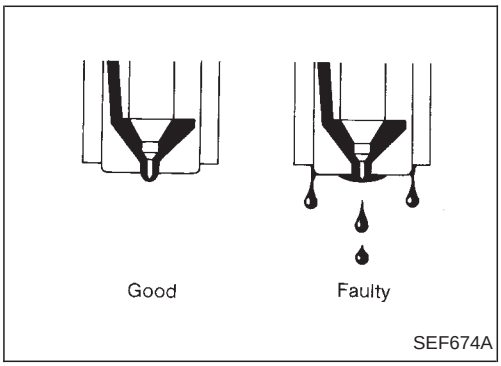

LEAKAGE TEST

1. Maintain the pressure at about 981 to 1,961 kPa (9.8 to 19.6 bar, 10 to 20 kg/cm^2, 142 to 284 psi) below initial injection pressure.
2. Check that there is no dripping from the nozzle tip or around the body.
3. If there is leakage, clean, overhaul injection nozzle or replace it.

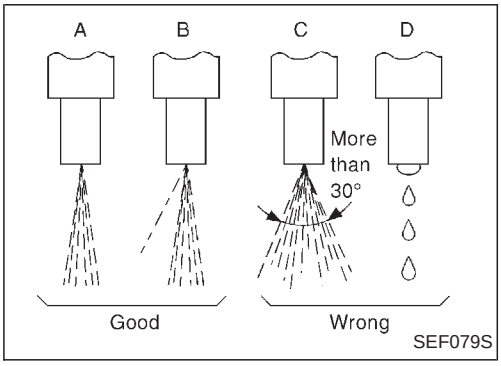

SPRAY PATTERN TEST

1. Check spray pattern by pumping tester handle one full stroke per second.

a. If main spray angle is within 30 degrees as shown, injection nozzle is good.

b. It is still normal even if a thin stream of spray deviates from main spray (pattern B).

2. If injection nozzle is not normal, adjust or clean injection nozzle or replace it.

Bleeding Fuel System

Air should be bled out of fuel system when injection pump is removed or fuel system is repaired.
Protect pump and engine mounts from fuel splash with rags.
If engine will not start after bleeding air, loosen injection tubes at nozzle side and crank engine until fuel overflows from injection tube. Tighten injection tube flare nuts.
If the engine does not operate smoothly after it has started, race it two or three times.

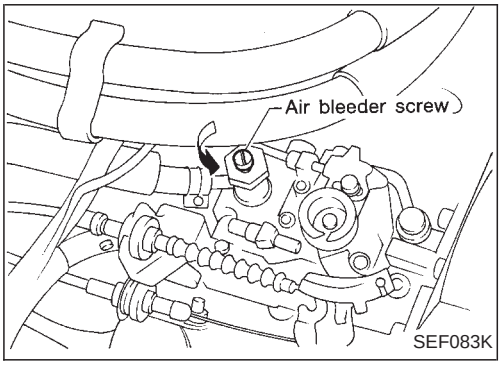

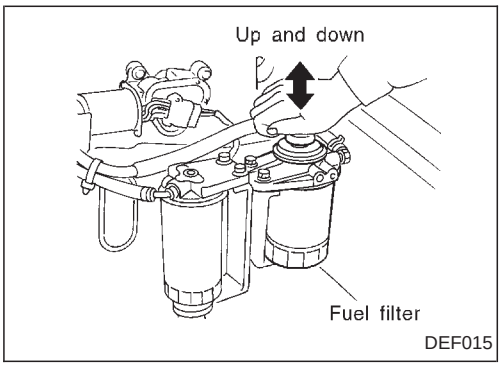

CAUTION:
Wipe up any fuel discharged while bleeding air during each step.

- **Step 1: Fuel filter and injection pump bleeding**

1. Loosen air bleeder screw to injection pump.
2. Move fuel filter priming pump up and down until no further air comes out of air bleeder screw.
3. Tighten air bleeder screw.

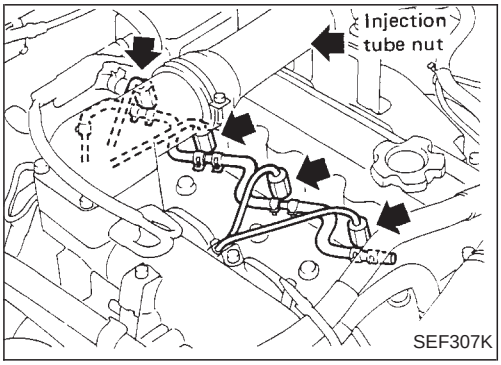

- **Step 2: Fuel injection tube and spill tube air bleeding**

1. Loosen injection tube nuts on nozzle holder side.
2. Move the priming pump up and down until no further air comes out of the injection tube nuts.
3. Tighten the injection tube nuts.
   : 20 - 25 N·m (2.0 - 2.5 kg-m, 14 - 18 ft-lb)

Bleeding Fuel Filter

1. Move the priming pump up and down to bleed air from the fuel filter.
2. When air is completely bled from the fuel pump, priming pump operation becomes noticeably heavy. Stop pump operation.

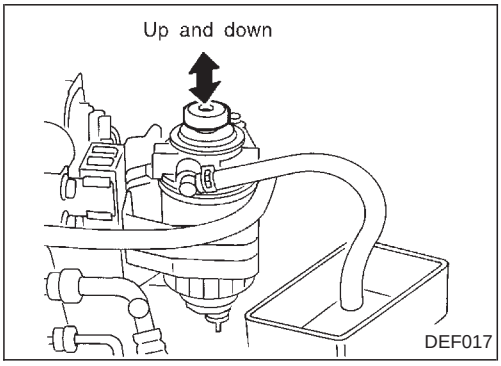

Checking Priming Pump

Before checking priming pump, make sure that fuel filter is filled with fuel.

1. Disconnect fuel return hose.

Place a suitable container beneath hose end.

2. Pump priming pump and check that the fuel overflows from the hose end. If not, replace priming pump.

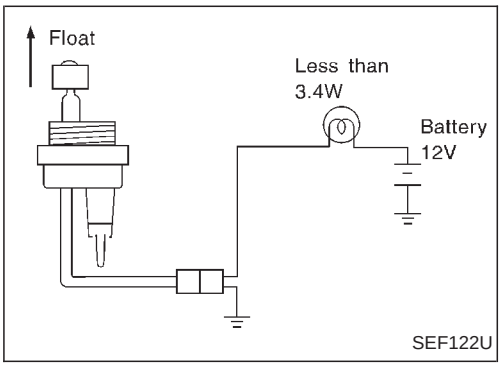

Checking Fuel Filter Switch

1. Remove the connector from filter and fuel filter switch.
2. Turn the key switch “ON”. Lift the float to ensure that the warning lamp turns on.

Fuel filter switch tightening torque:
: 3.9 - 5.9 N·m (0.4 - 0.6 kg-m, 35 - 52 in-lb)

Discard the old O-ring and replace it with a new one.

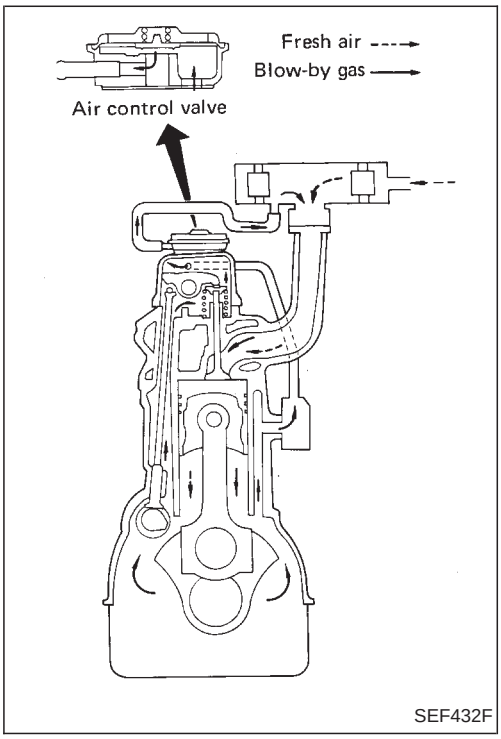

SEF432F

Description

The closed-type crankcase ventilation system is utilized as a crankcase emission control system.
The closed-type crankcase emission control system prevents blow-by gas from entering the atmosphere and keeps the internal crankcase pressure constant.
During the valve operation, the blow-by gas is fed into the intake manifold by the air control valve.
This is activated by the internal rocker cover pressure. When the intake air flow is restricted by the throttle body, the internal rocker cover pressure decreases. At this point, the crankcase emission control valve keeps the internal rocker cover pressure constant so that air or dust is not sucked in around the crankshaft oil seal.

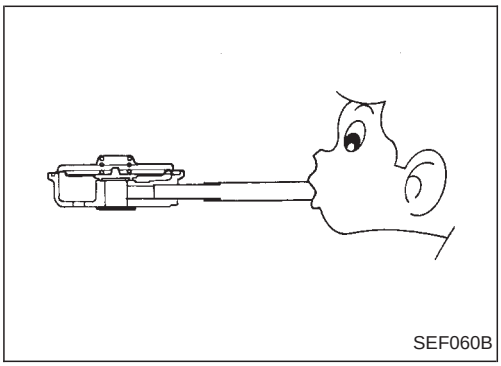
SEF060B

Inspection

AIR CONTROL VALVE

1. Remove rocker cover.
2. Remove control valve from rocker cover.
3. After plugging the center hole with adhesive tape, check that air flows from inlet by blowing air from outlet and that air does not flow by inhaling air.

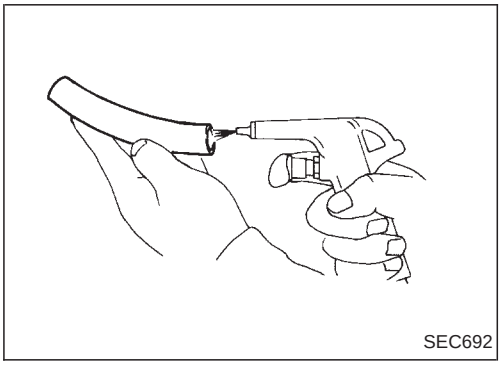
SEC692

VENTILATION HOSE

1. Check hoses and hose connections for leaks.
2. Disconnect all hoses and clean with compressed air.
   If any hose cannot be freed of obstructions, replace.

Component Parts Location

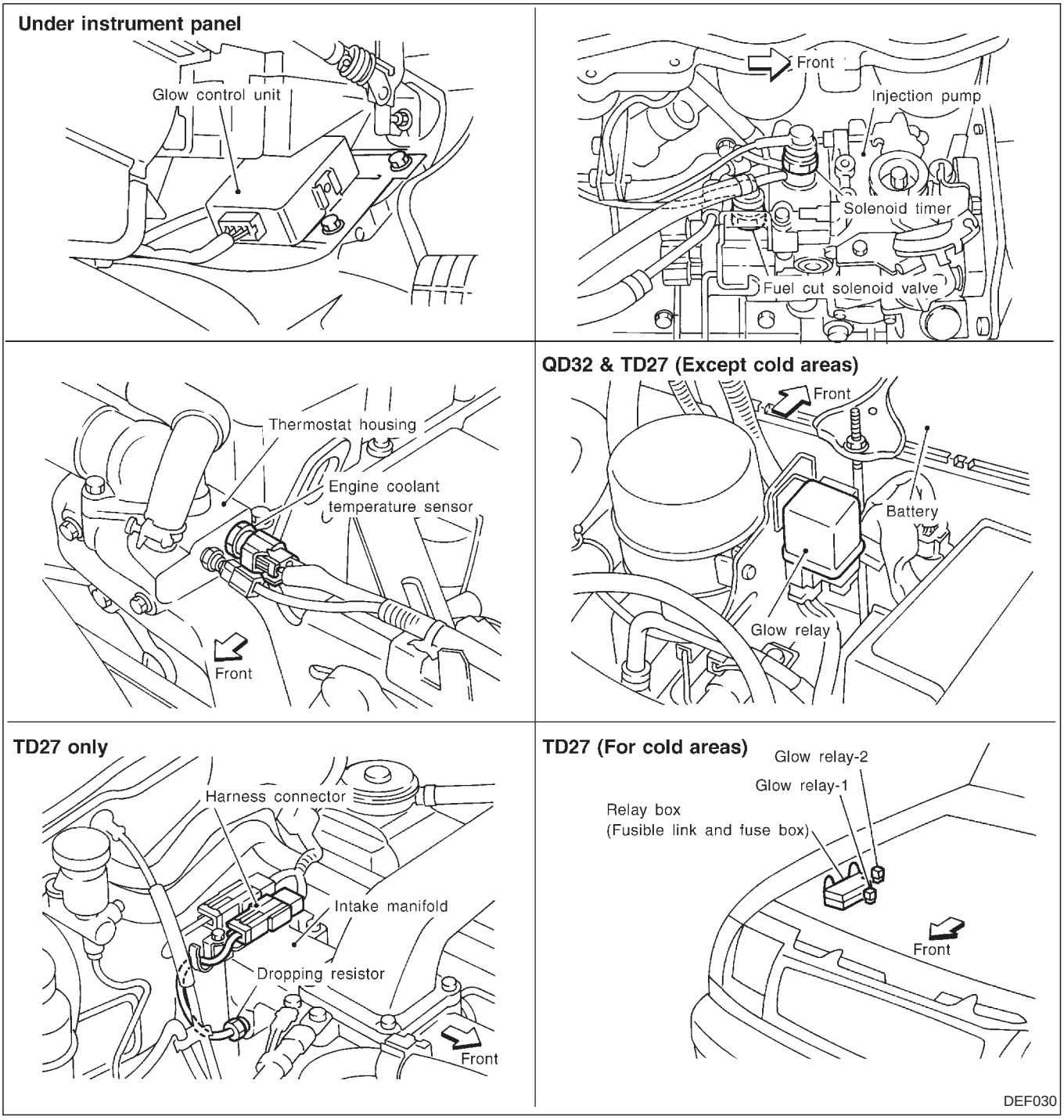

Circuit Diagram

QD ENGINE

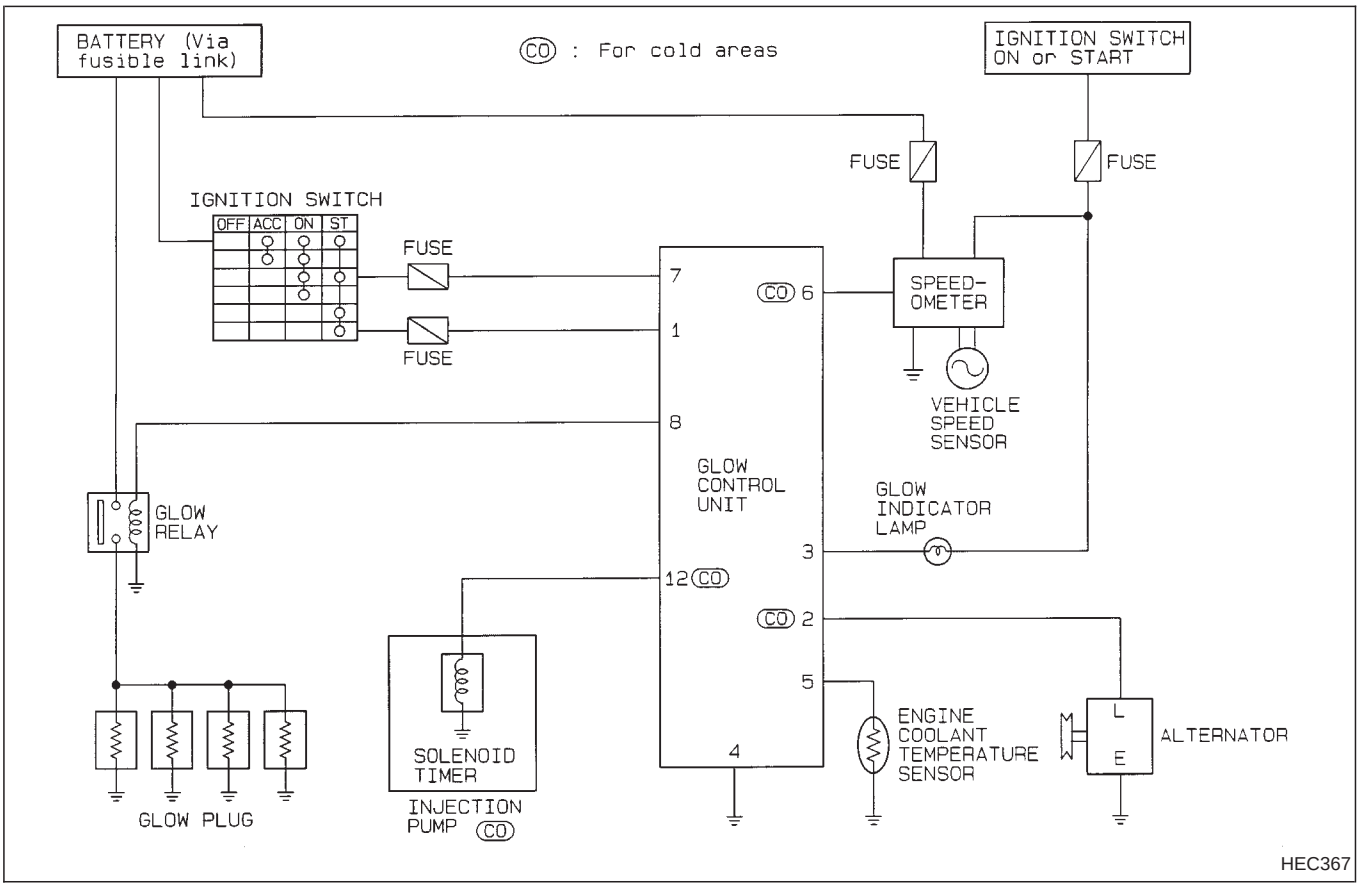

Circuit Diagram (Cont'd)

TD ENGINE FOR COLD AREAS

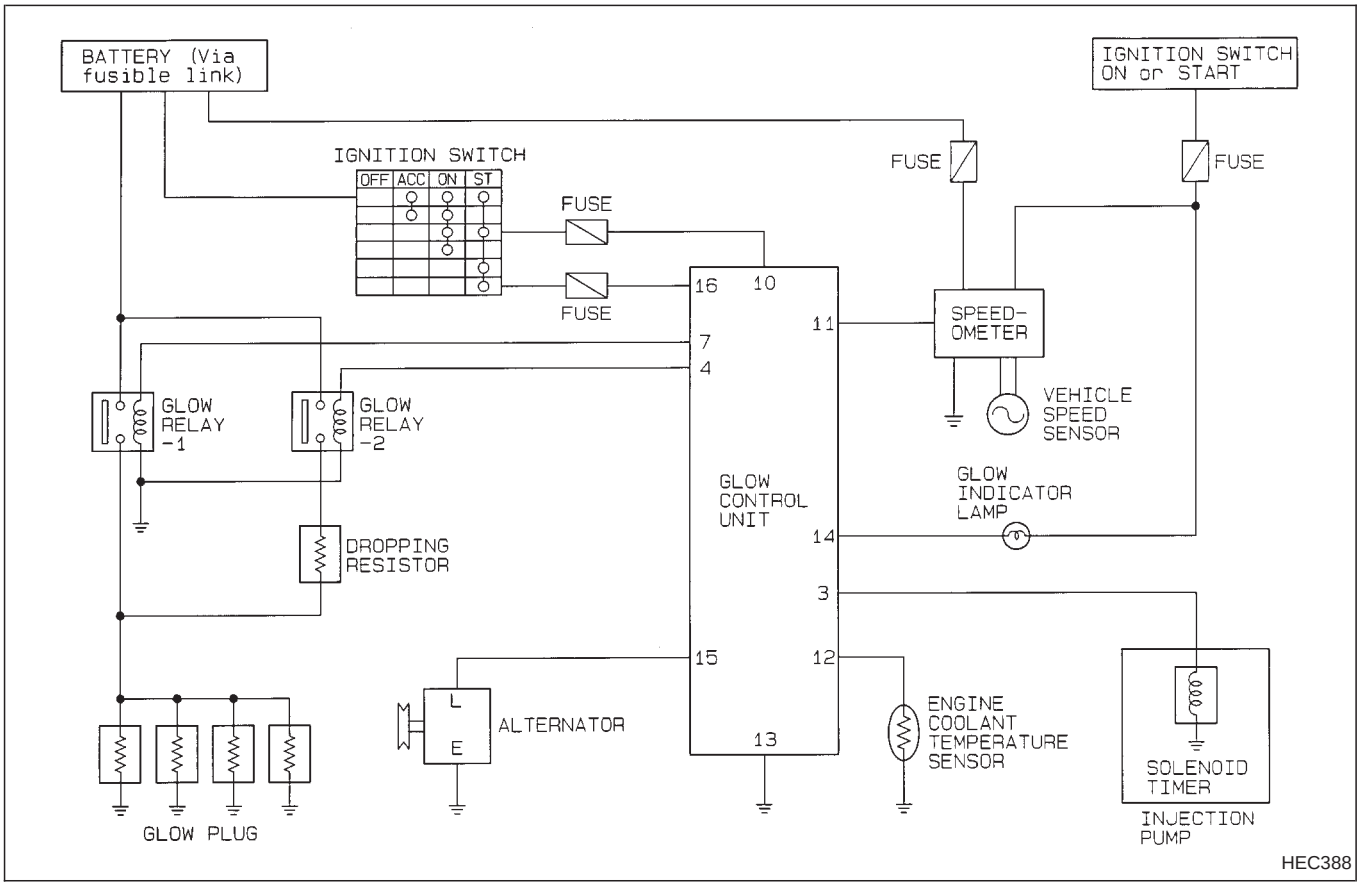

TD ENGINE EXCEPT FOR COLD AREAS

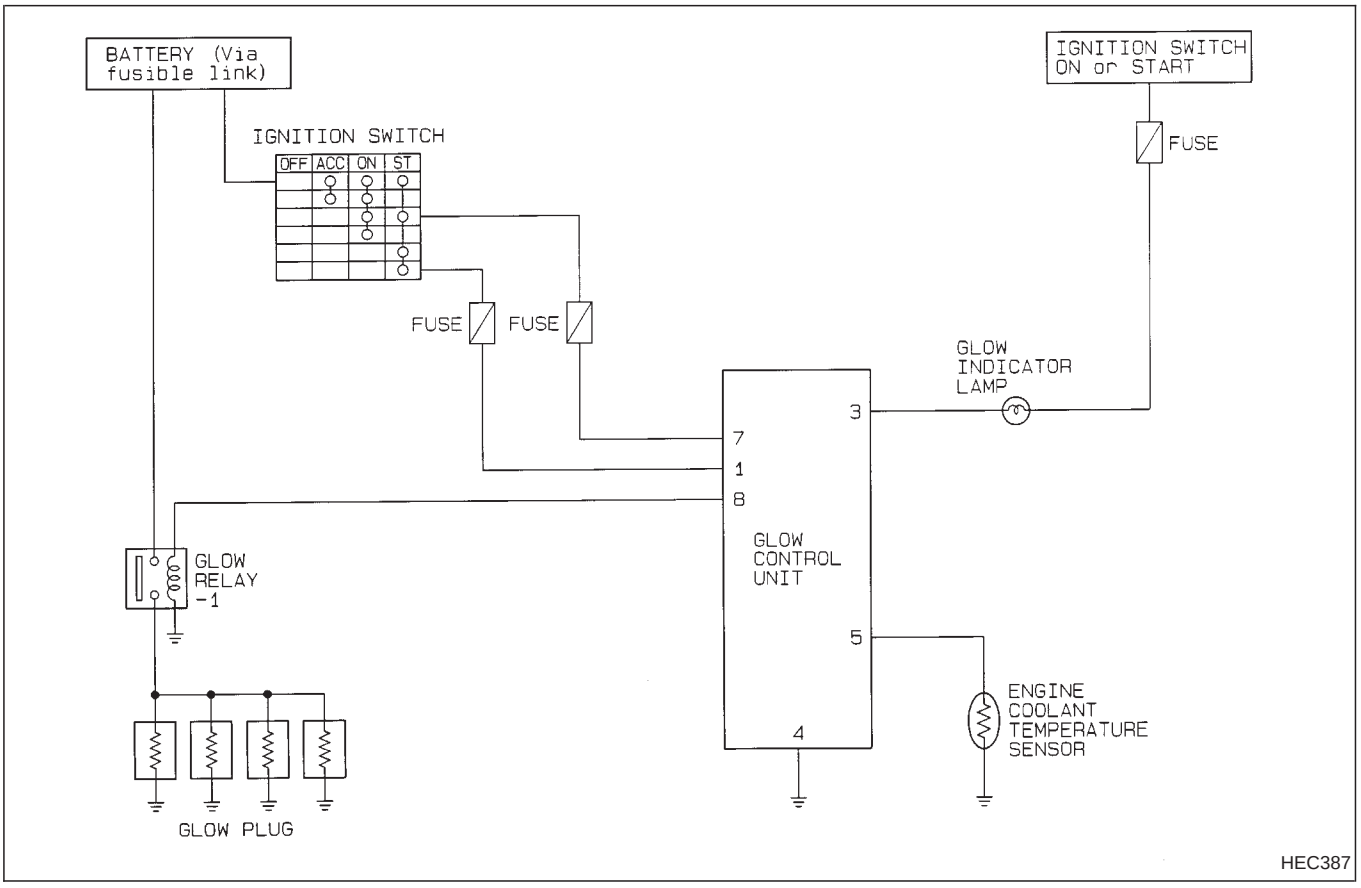

Description

QD AND TD ENGINES

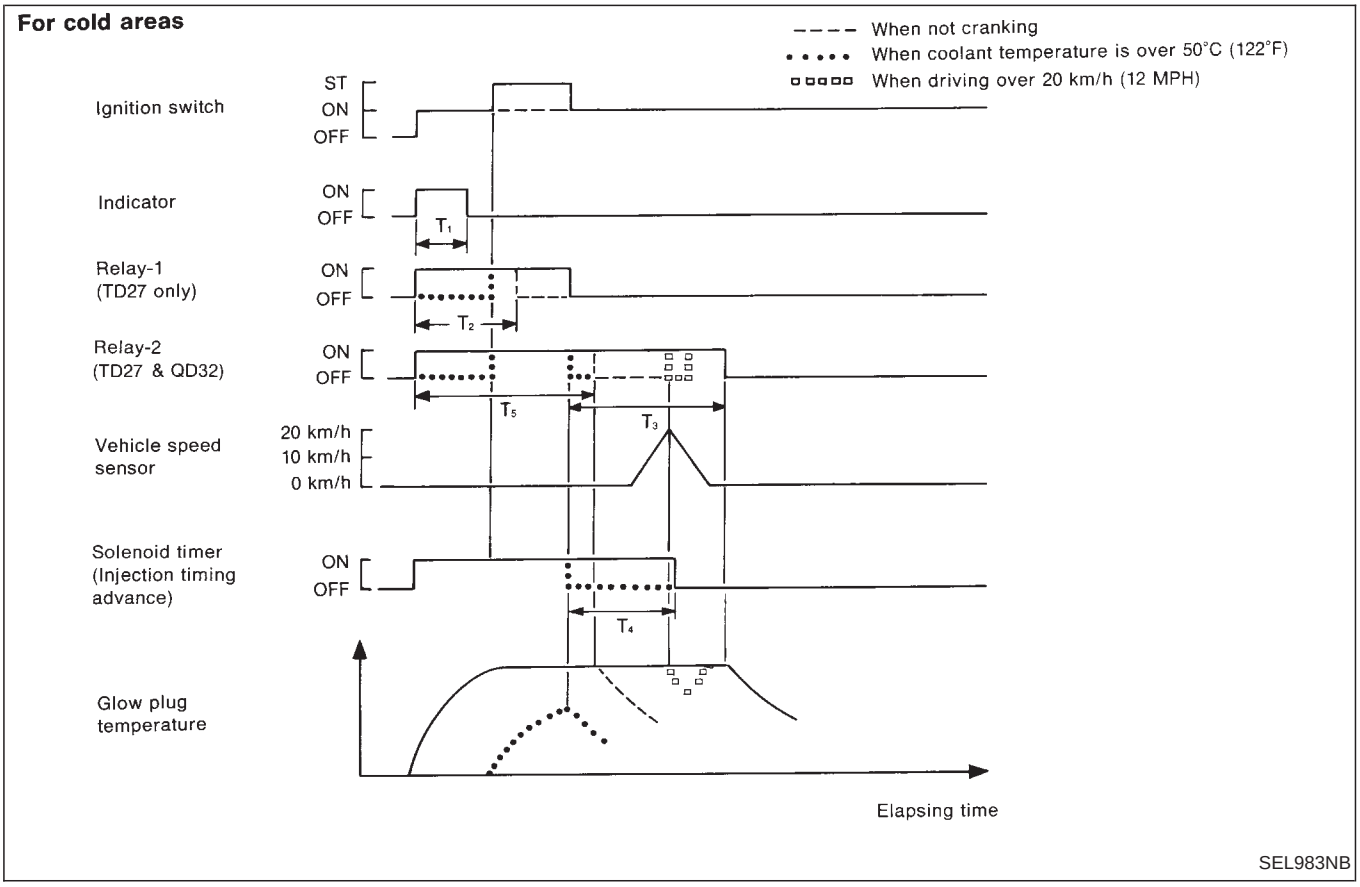

When coolant temperature is lower than 50°C (122°F), the relay-1 and the relay-2 are turned on at the same time that the ignition switch is turned on. From this time, the electric current flows through the glow plugs and heats them up quickly. After T_1 seconds have passed, the control unit turns off the indicator. The relay-1 automatically turns off after it has been on for T_2 seconds or the cranking time, whichever is longer.
The solenoid timer (for advance injection timing) is turned on at the time that the ignition switch is turned to "ON". The relay-2 remains on for T_3 seconds and the solenoid timer remains on for T_4 seconds after the ignition switch has returned to "ON" from "START". The solenoid timer advances injection timing. These features improve the combustion performance of the engine after it has started.
When the coolant temperature is higher than 50°C (122°F), the relay-2 is turned on only during engine cranking for TD27 engine.
When the coolant temperature is higher than 10°C (50°F), the solenoid timer is turned on only during engine cranking.

T_1: approx. 2 - 6	[sec.]	(Varies with coolant temperature.)
T_2: approx. 4 - 8	[sec.]	(Varies with coolant temperature.)
T_3: 600	[sec.]	[When coolant temperature is below 50°C (122°F).]
0	[sec.]	[When coolant temperature is over 50°C (122°F).]
T_4, T_5*1: 30	[sec.]	[When coolant temperature is below 10°C (50°F).]
0	[sec.]	[When coolant temperature is over 10°C (50°F).]
T_5*2: 30	[sec.]	[When coolant temperature is below 50°C (122°F).]
5	[sec.]	[When coolant temperature is over 50°C (122°F).]

*1: For TD27 *2: For QD32

- When the ignition switch is repeatedly turned "ON" and "OFF", T_2 becomes shorter.

Description (Cont'd)

Except for cold areas

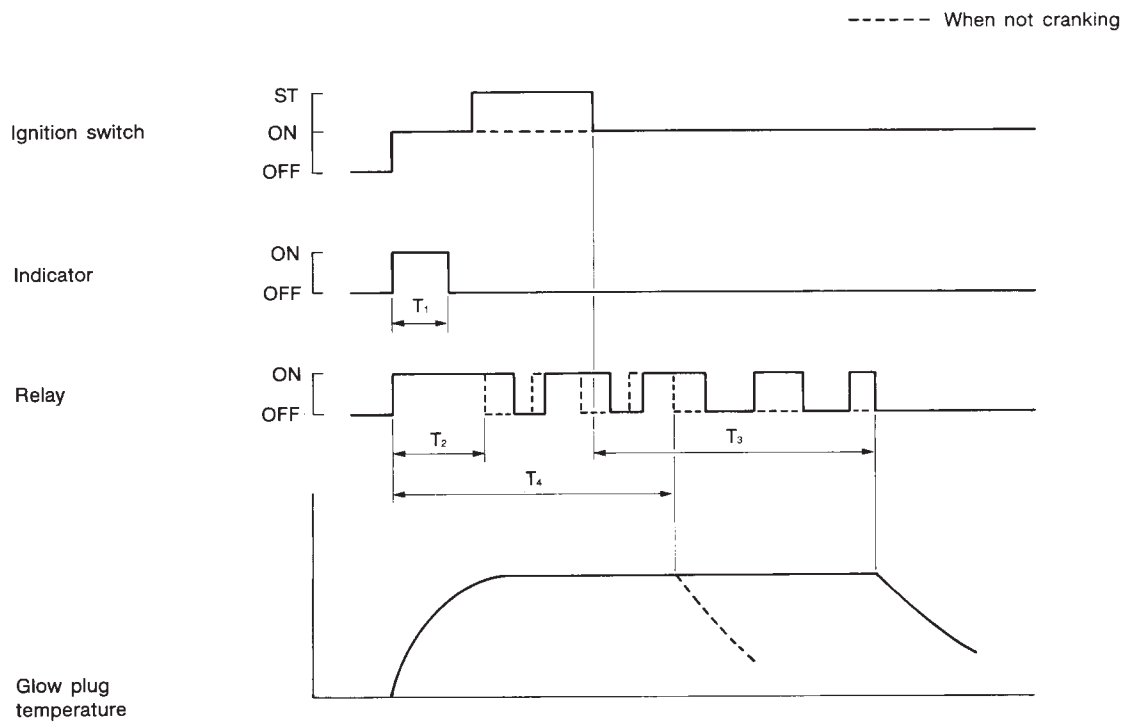

When the ignition switch is turned on, the relay is turned on and the electric current flows through the glow plugs and heats them up quickly. After T_1 seconds have passed, the control unit turns off the glow indicator but the relay remains on. The relay chops intermittently the electric current when the ignition switch turns to "START" from "ON".
The relay chops intermittently the electric current for T_3 seconds after the ignition switch has returned to "ON" from "START". When not cranking, the relay chops intermittently the electric current while T_4 - T_2 seconds after the ignition switch has turned to "ON" from "OFF".

T_1: approx. 2 - 6	[sec.]	(Varies with coolant temperature.)
T_2: approx. 4 - 8	[sec.]	(Varies with coolant temperature.)
T_3, T_4: 15	[sec.]	[When coolant temperature is below 50°C (122°F).]
2	[sec.]	[When coolant temperature is over 50°C (122°F).]

- When the ignition switch is repeatedly turned "ON" and "OFF", T_2 becomes shorter.

Wiring Diagram

QD ENGINE (LHD)

EC-GLOW-01

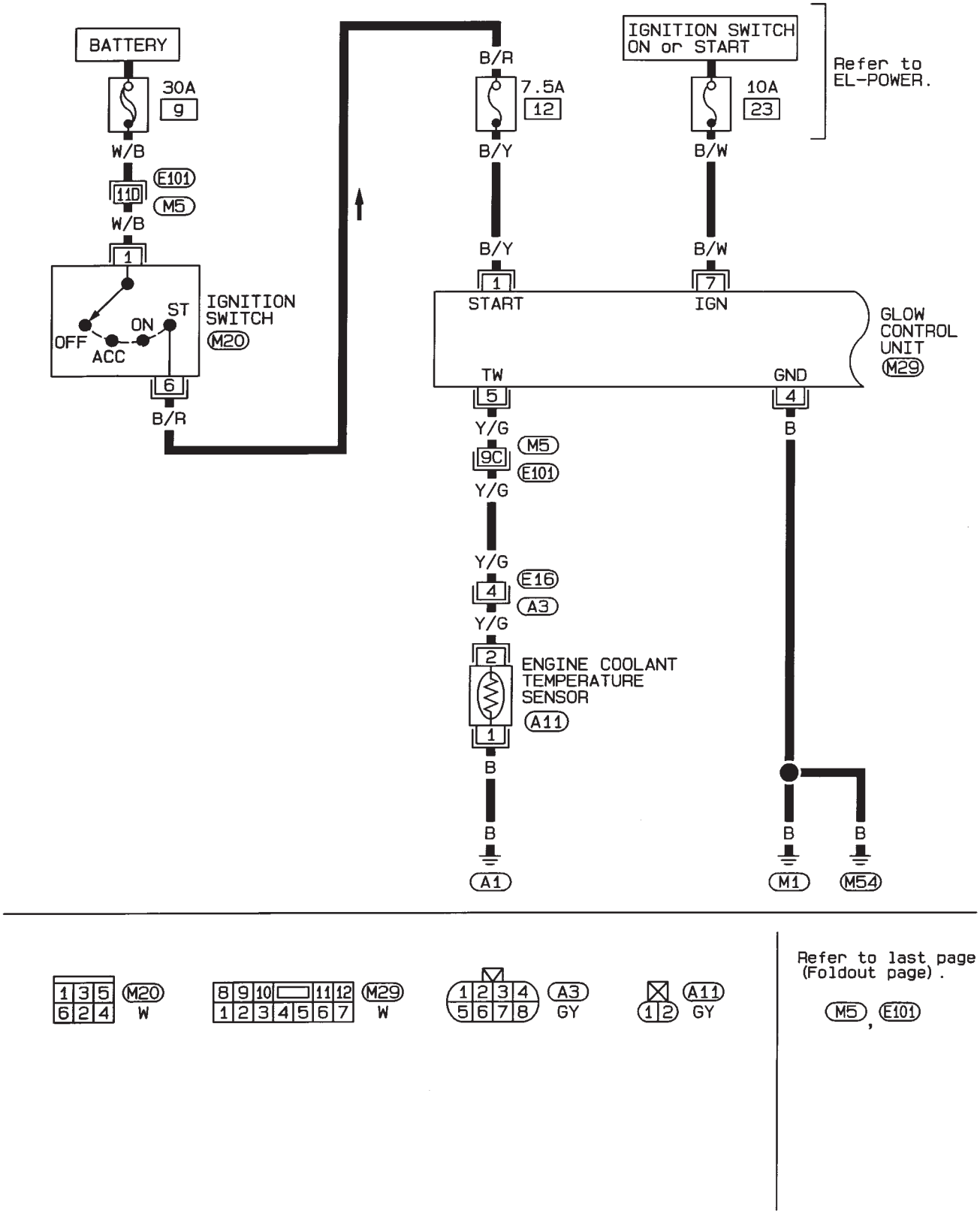

HEC368

Wiring Diagram (Cont'd)

QD ENGINE (LHD)

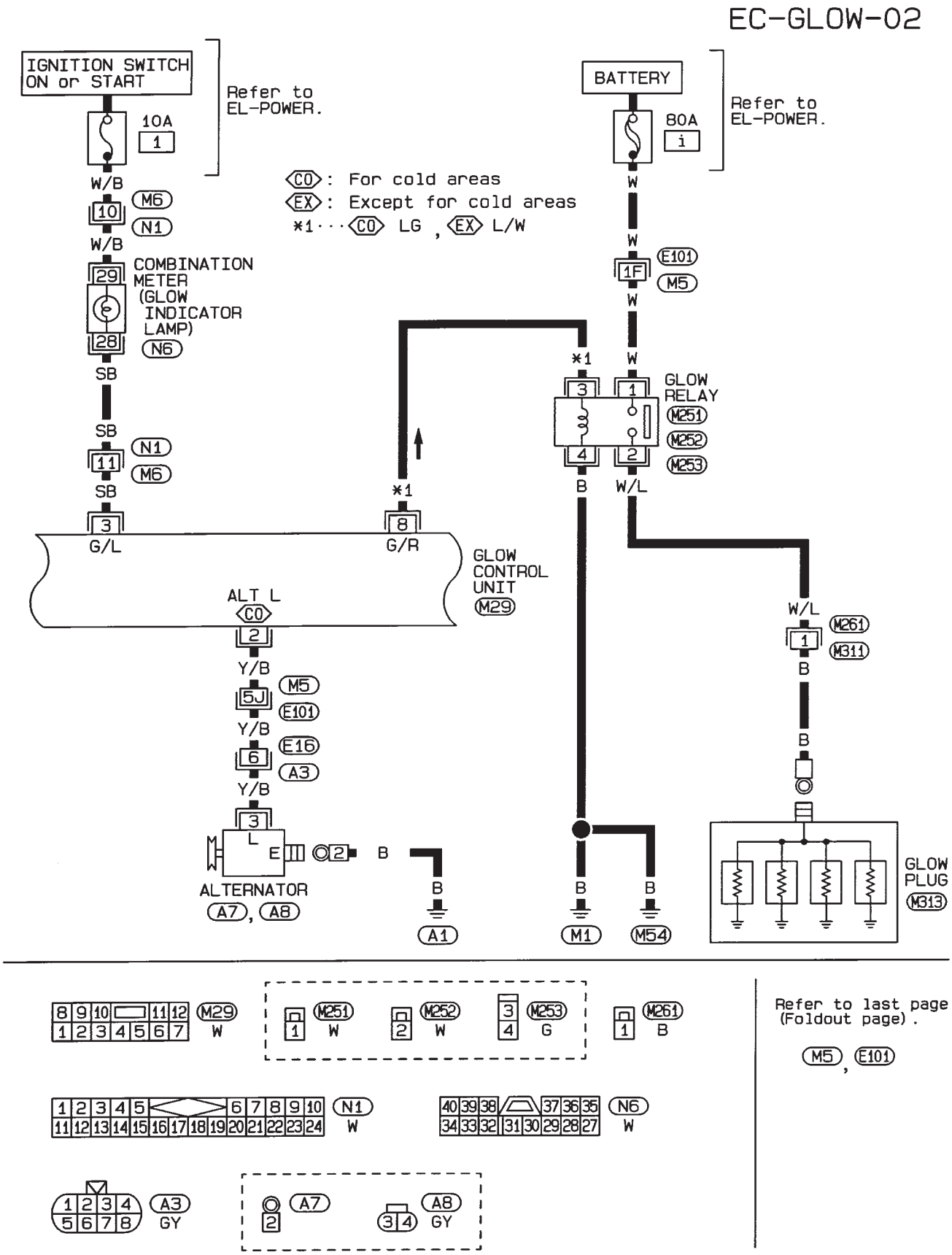

HEC369

Wiring Diagram (Cont'd)

QD ENGINE (LHD)

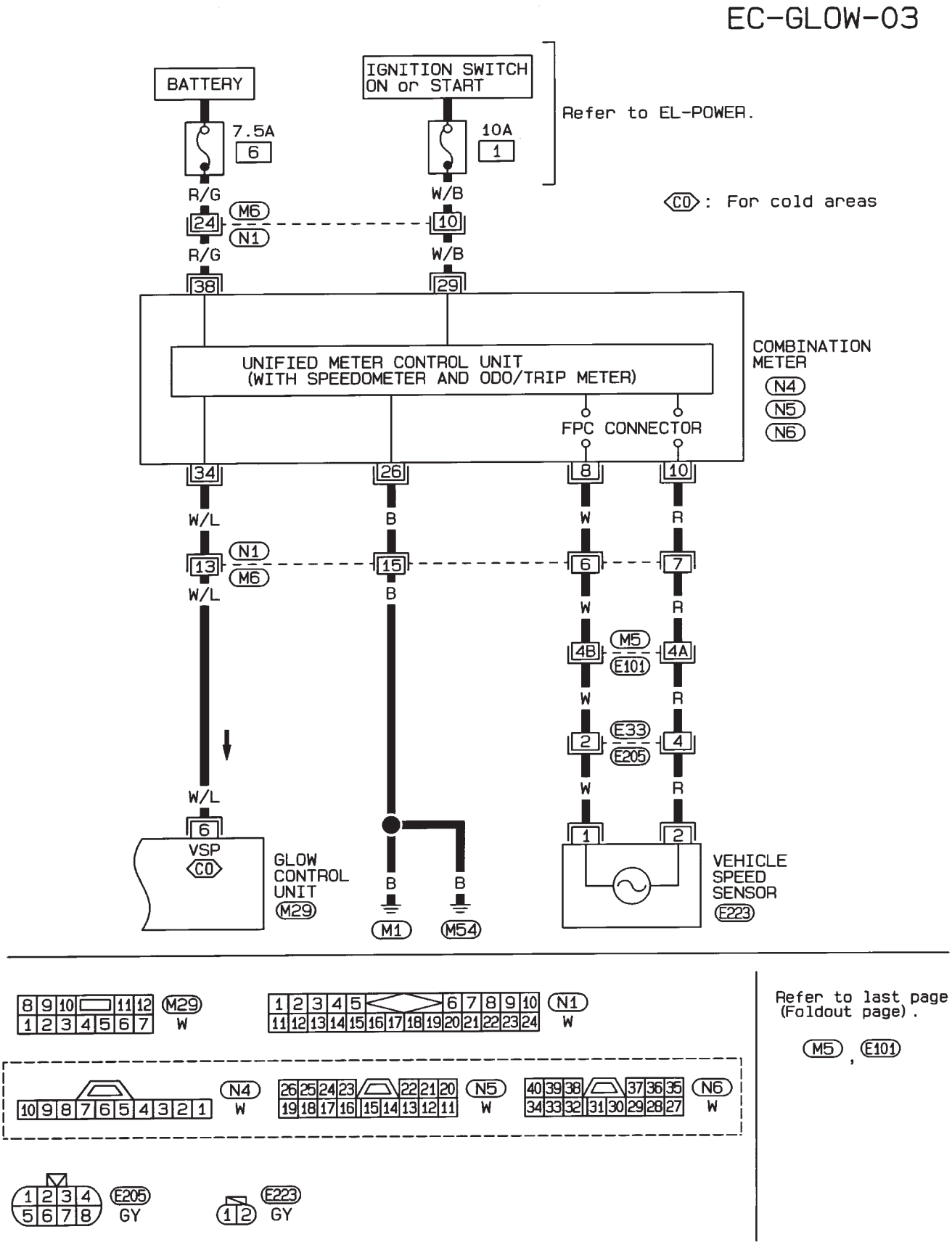

HEC409

Wiring Diagram (Cont'd)

QD ENGINE (RHD)

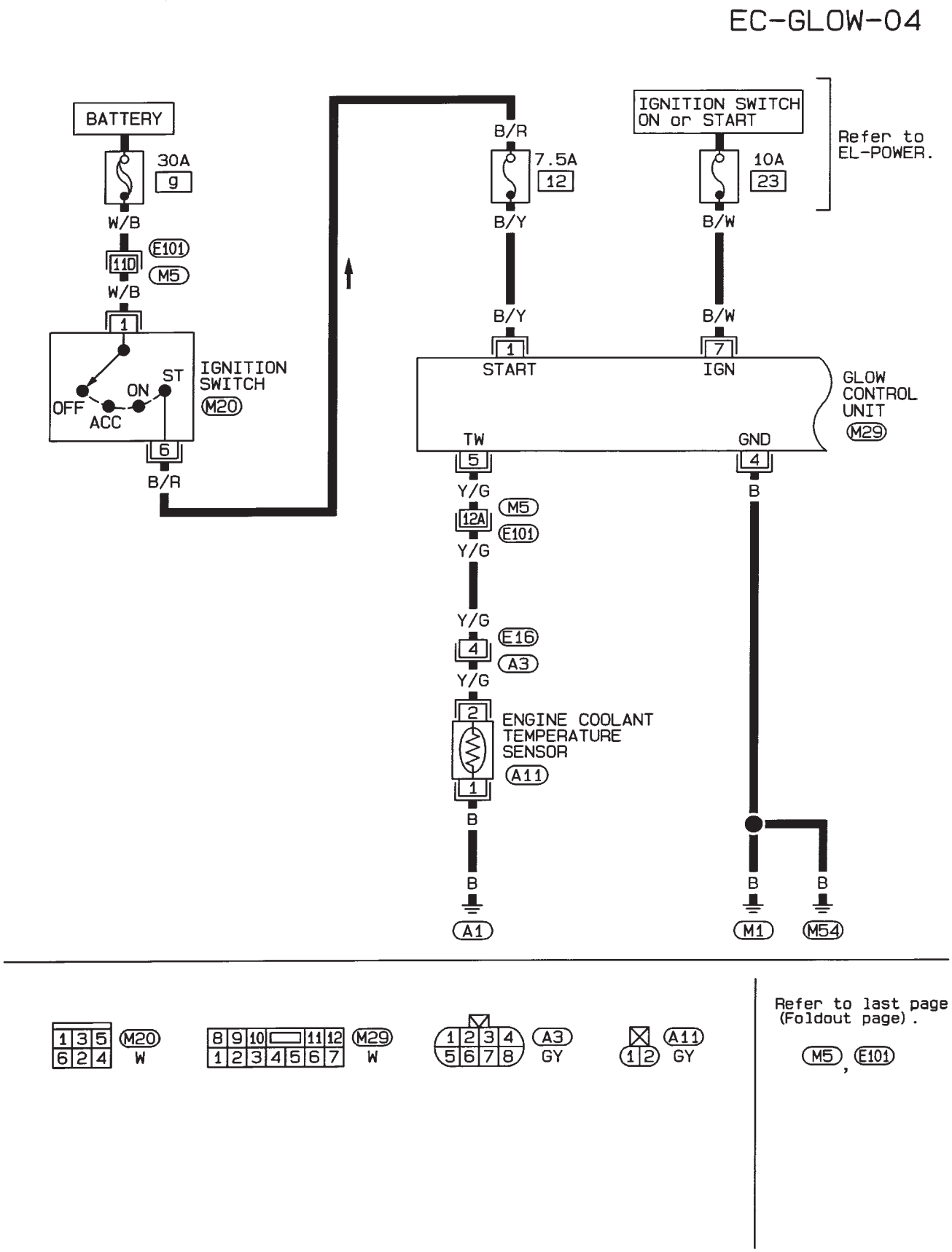

HEC370

Wiring Diagram (Cont'd)

QD ENGINE (RHD)

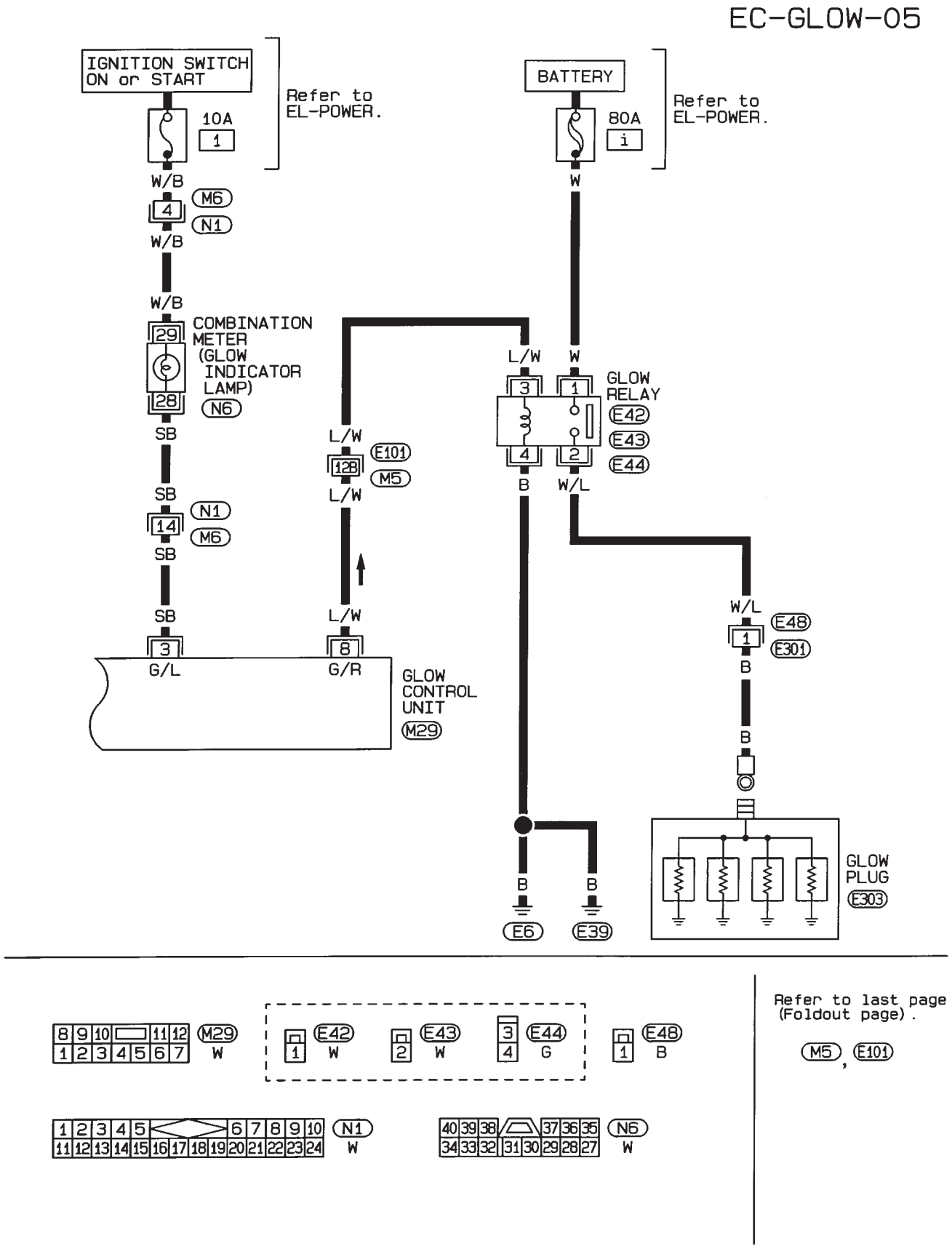

HEC371

Wiring Diagram (Cont'd)

TD ENGINE EXCEPT FOR COLD AREAS (LHD)

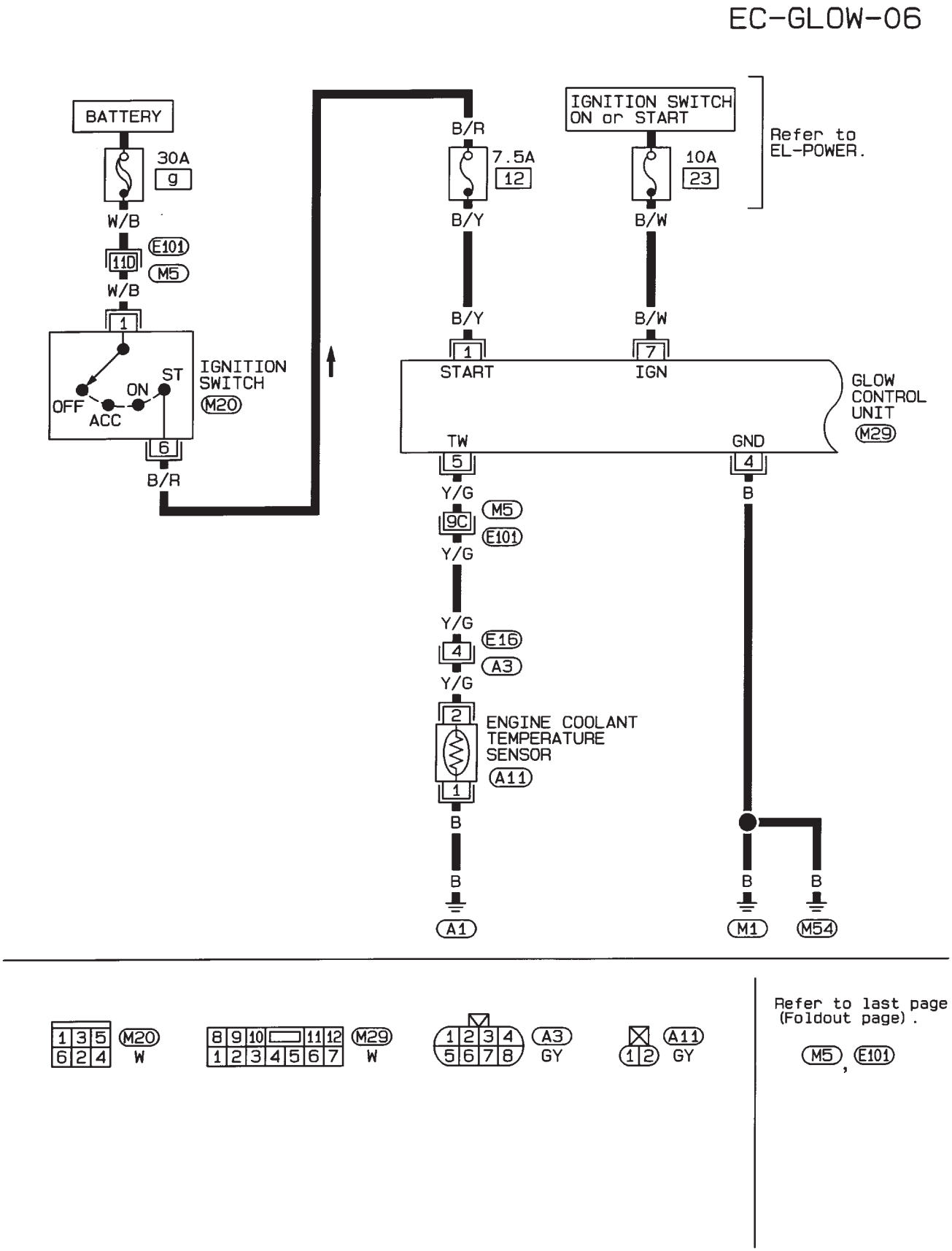

HEC389

Wiring Diagram (Cont'd)

TD ENGINE EXCEPT FOR COLD AREAS (LHD)

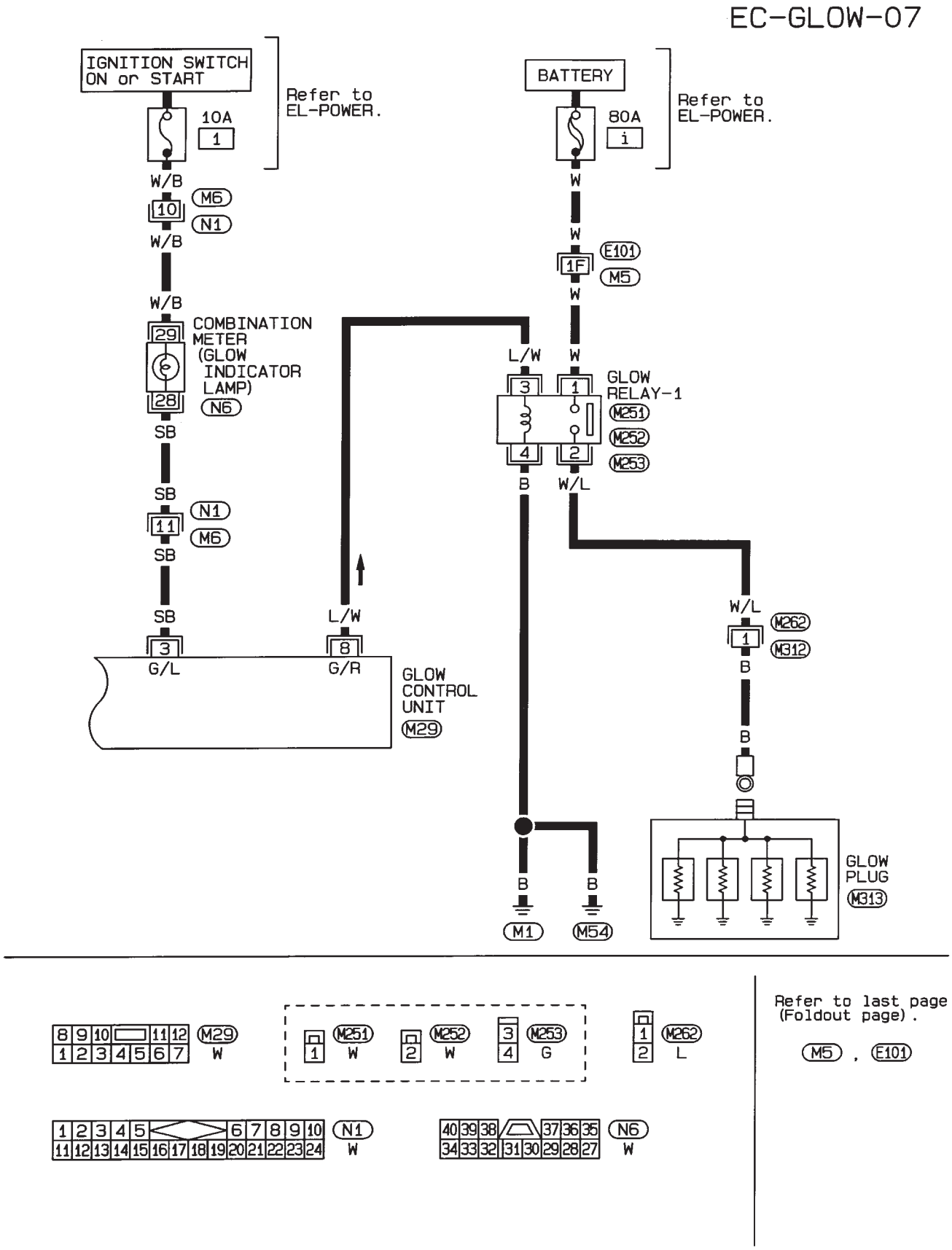

HEC390

Wiring Diagram (Cont'd)

TD ENGINE EXCEPT FOR COLD AREAS (RHD)

EC-GLOW-08

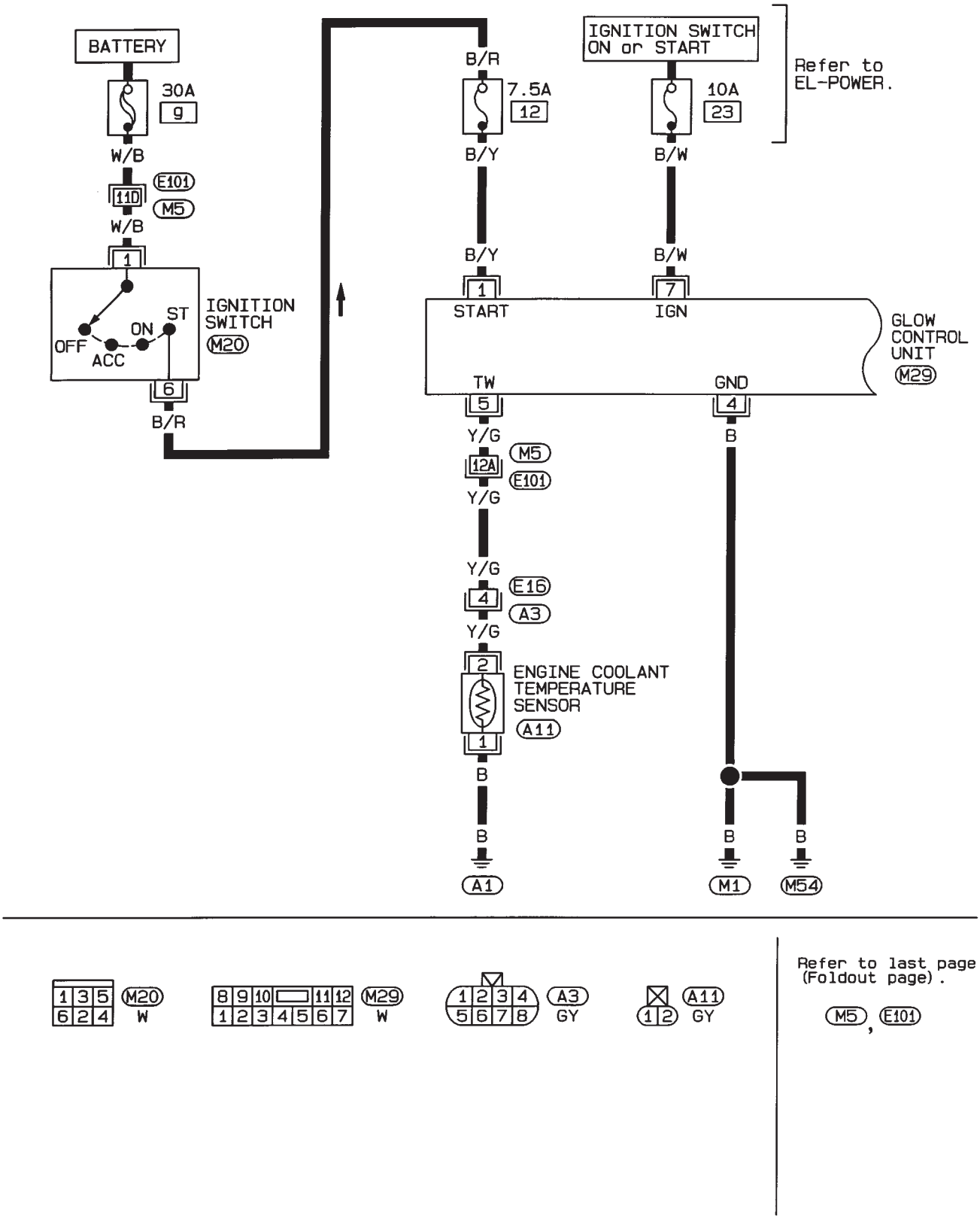

HEC391

Wiring Diagram (Cont'd)

TD ENGINE EXCEPT FOR COLD AREAS (RHD)

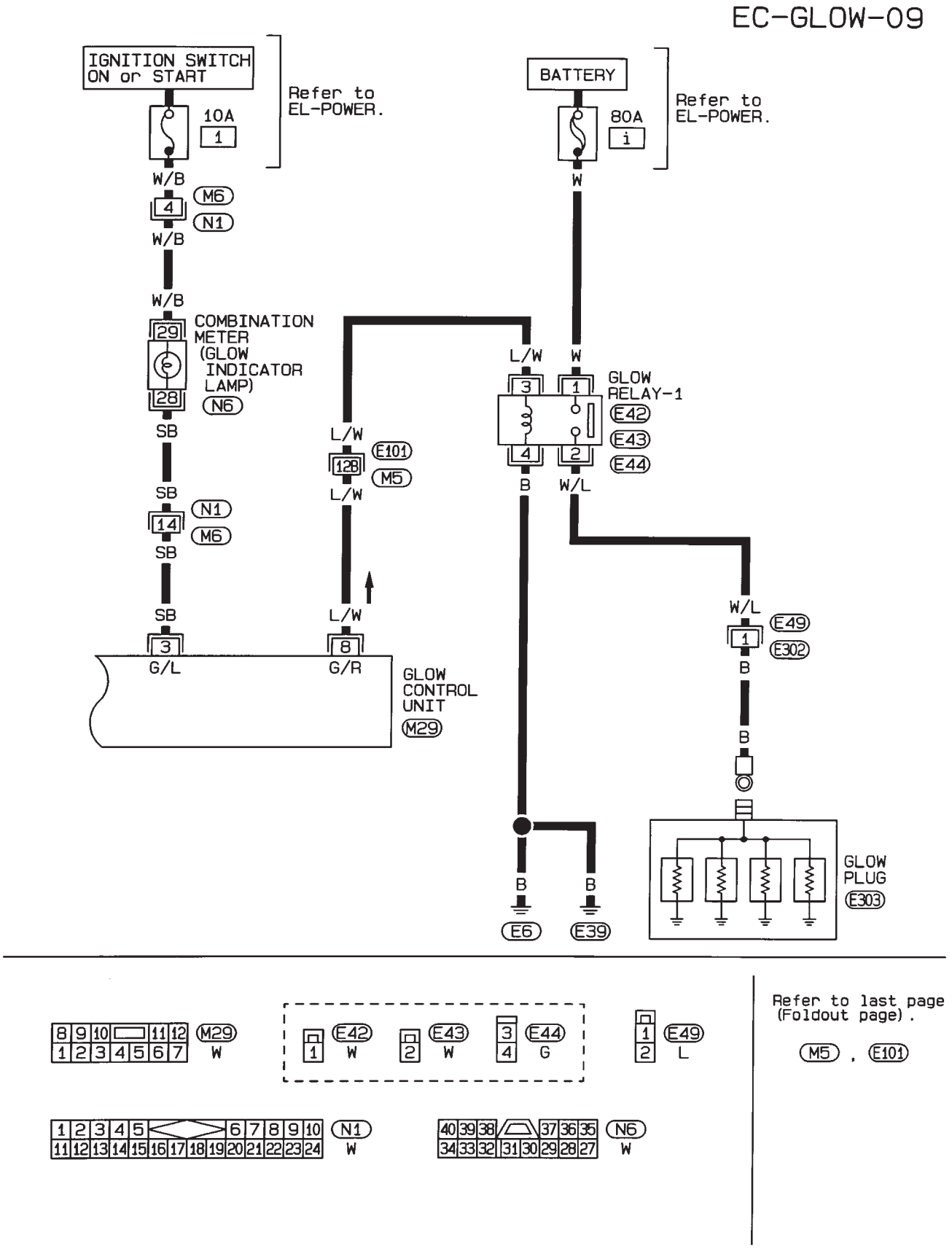

HEC392

Wiring Diagram (Cont'd)

TD ENGINE FOR COLD AREAS (LHD)

EC-GLOW-10

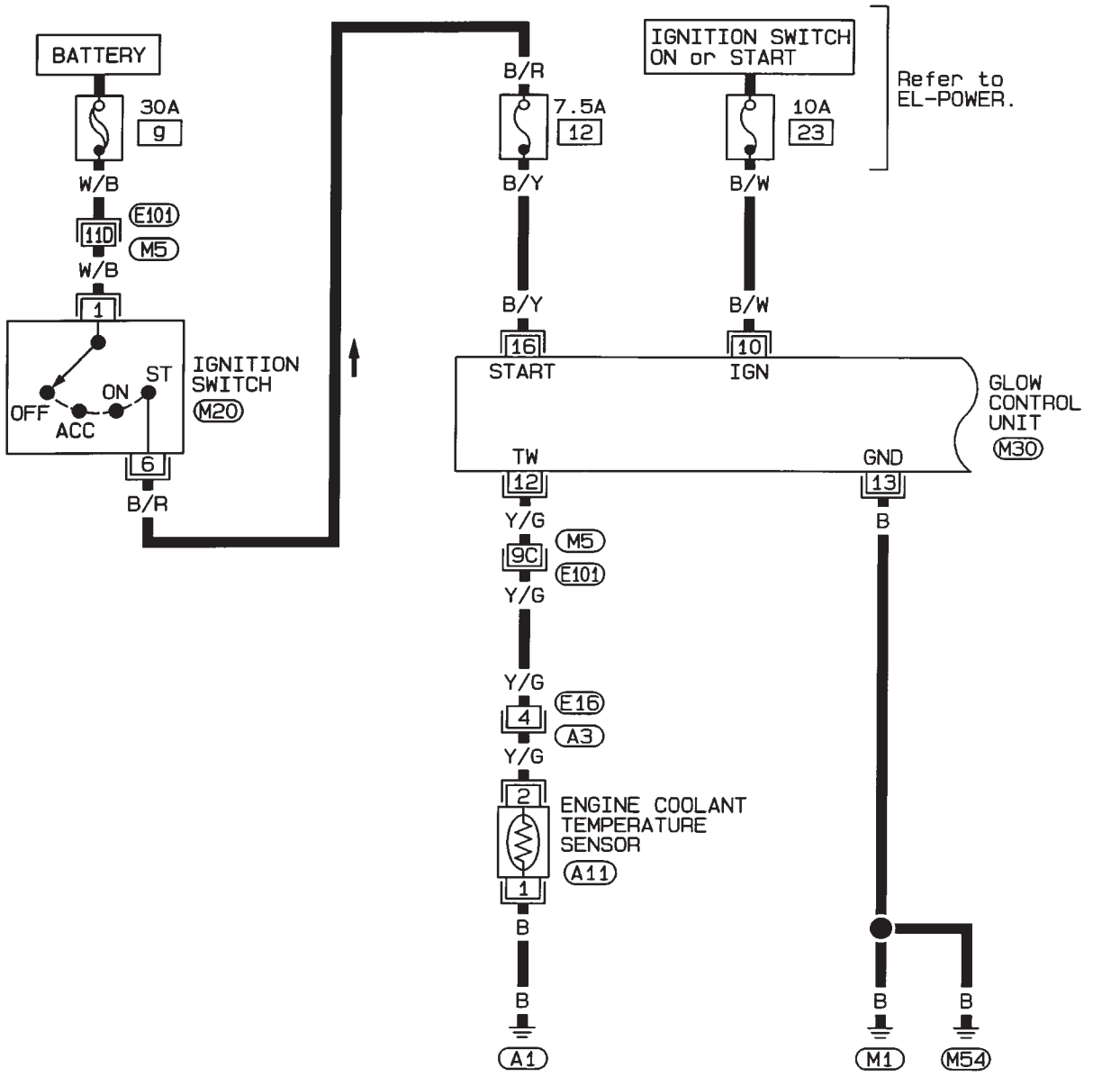

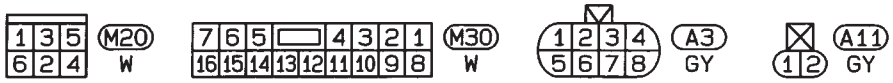

Refer to last page (Foldout page).

M5, E101

HEC393

Wiring Diagram (Cont'd)

TD ENGINE FOR COLD AREAS (LHD)

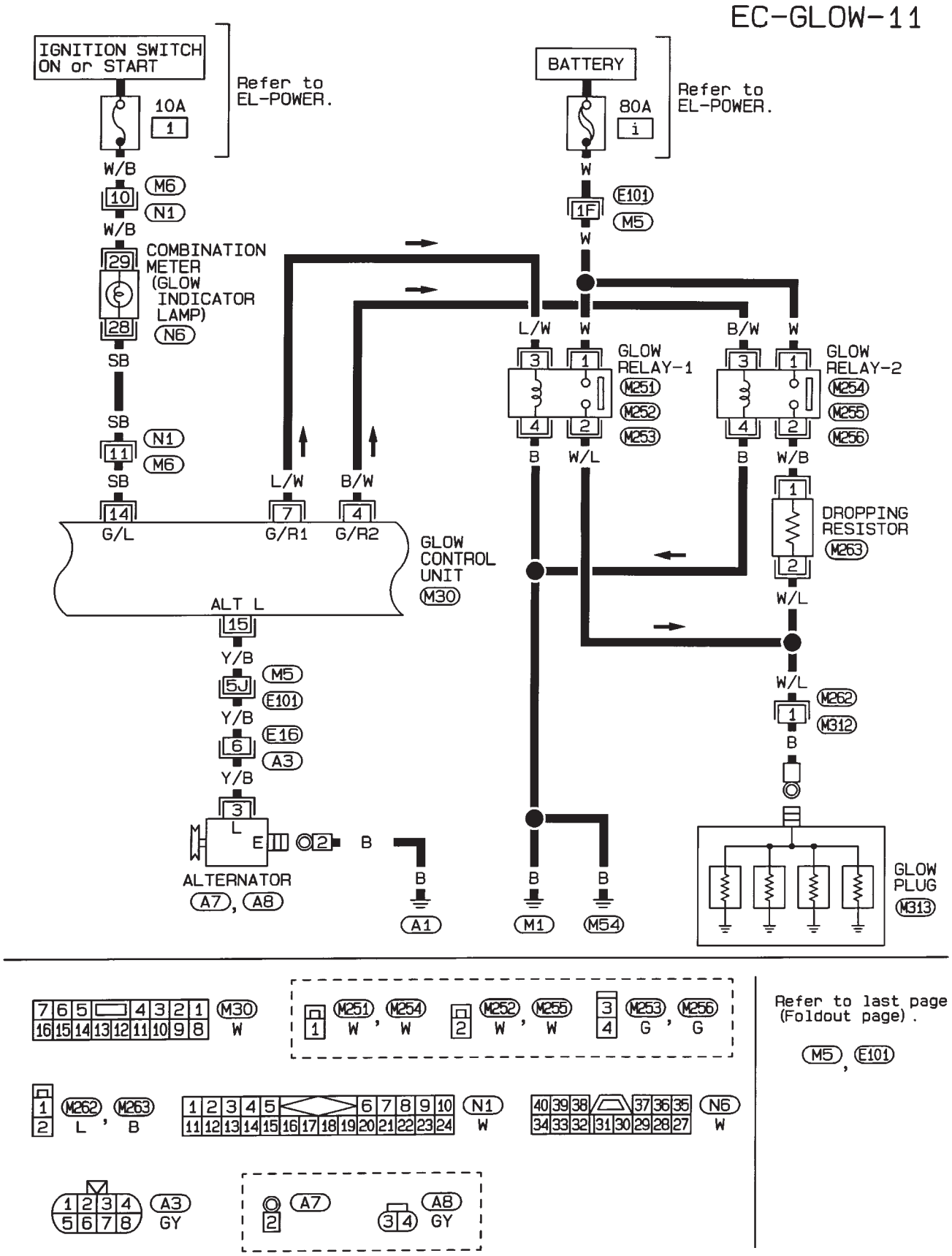

HEC394

Wiring Diagram (Cont'd)

TD ENGINE FOR COLD AREAS (LHD)

EC-GLOW-12

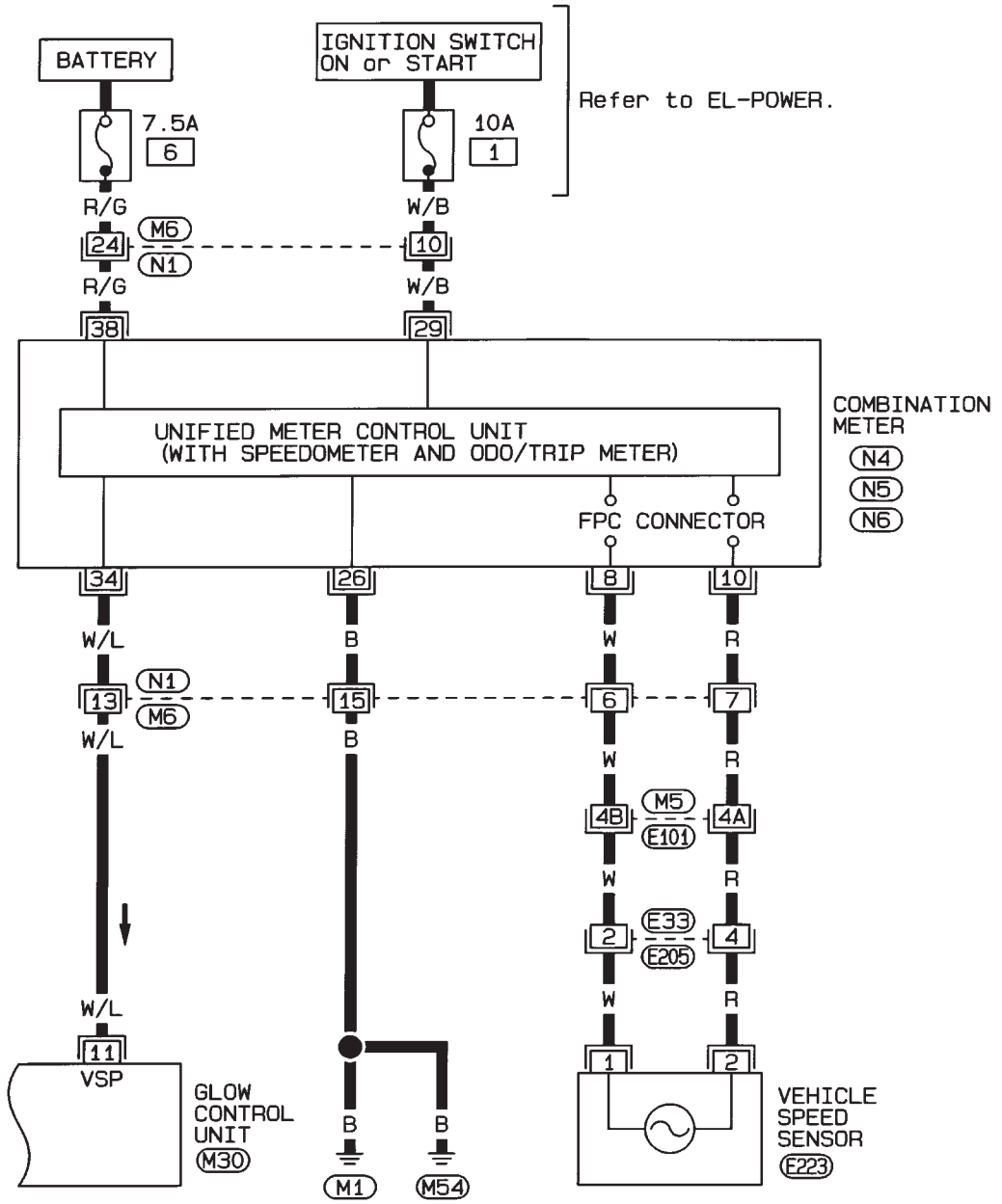

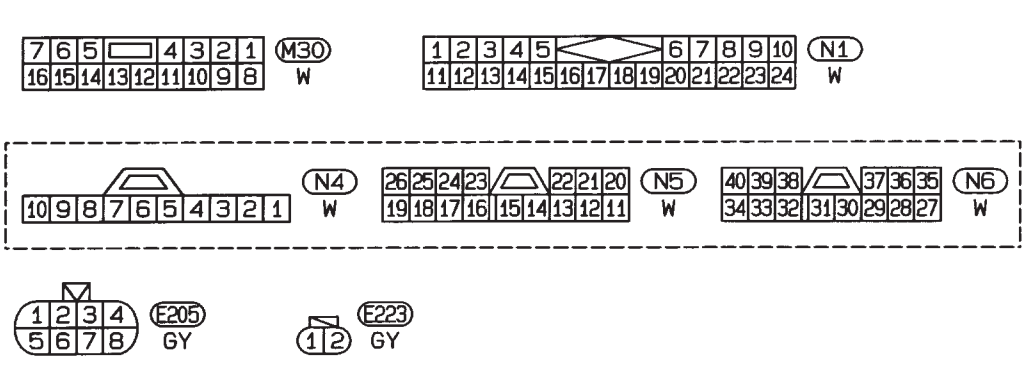

Refer to last page (Foldout page).

M5, E101

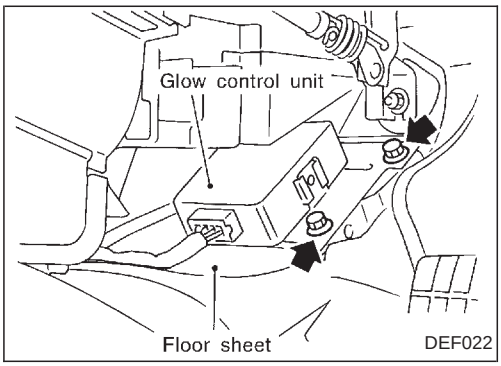

Glow Control Unit Circuit Inspection (For Cold Areas)

Roll up the floor sheet. Check the glow control unit.

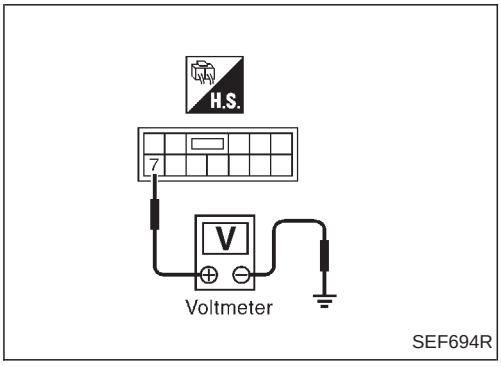

POWER SUPPLY CIRCUIT

QD engine

Turn ignition switch ON and check voltage between terminal ⑦ and body ground.

Voltage: approx. 12V

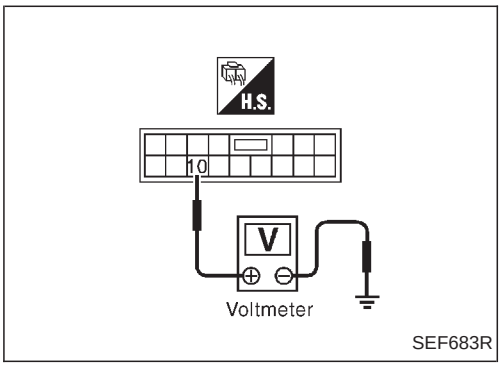

TD engine

Turn ignition switch ON and check voltage between terminal ⑩ and body ground.

Voltage: approx. 12V

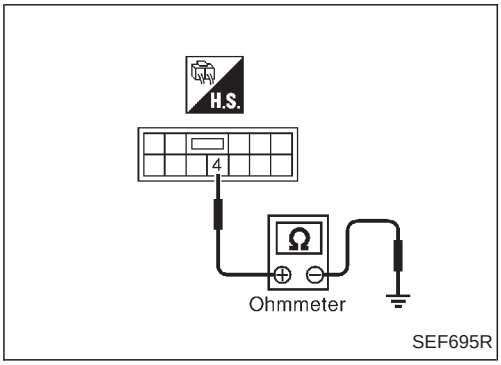

GROUND CIRCUIT

QD engine

Check continuity between terminal ④ and body ground.

Continuity should exist.

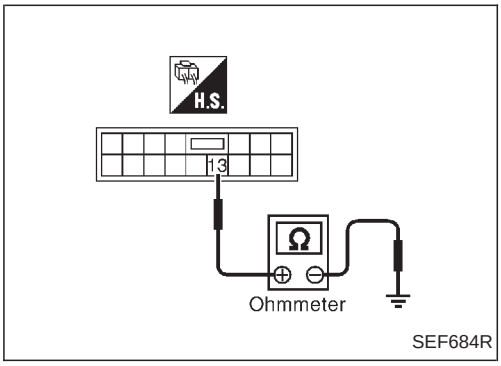

TD engine

Check continuity between terminal ⑬ and body ground.

Continuity should exist.

Glow Control Unit Circuit Inspection (For Cold Areas) (Cont'd)

SPEED SENSOR SIGNAL CIRCUIT

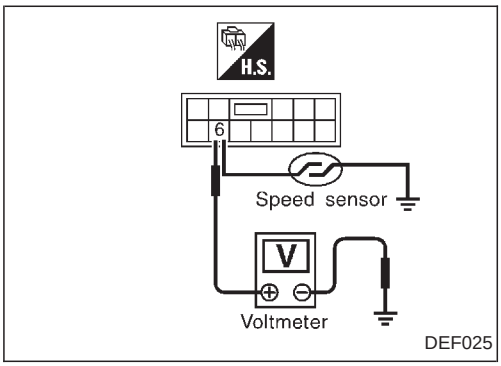

QD engine

While running vehicle or lifting rear wheels in 2WD position, check that voltage between terminal ⑥ and body ground fluctuates.

Voltage: approx. 5V

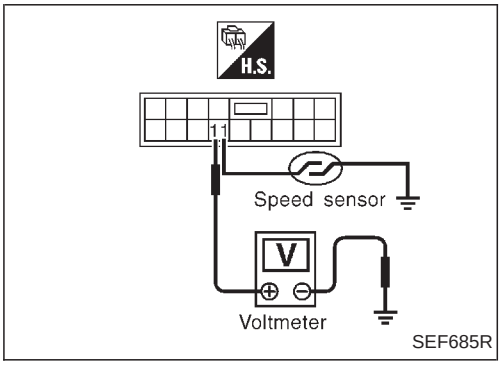

TD engine

While running vehicle or lifting rear wheels in 2WD position, check that voltage between terminal ⑪ and body ground fluctuates.

Voltage: approx. 5V

COOLANT TEMPERATURE SENSOR CIRCUIT

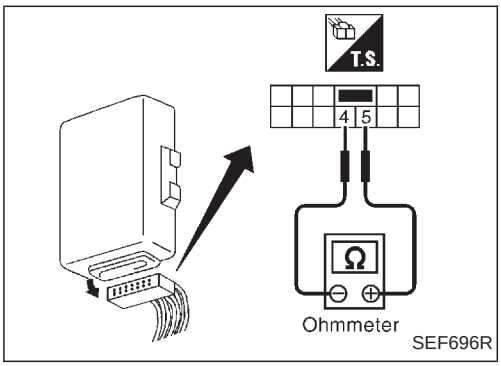

QD engine

Check continuity between terminals ⑤ and ④.
Measure resistance to temperature approximately as shown in "COOLANT TEMPERATURE SENSOR", "Component Inspection", EC-296.

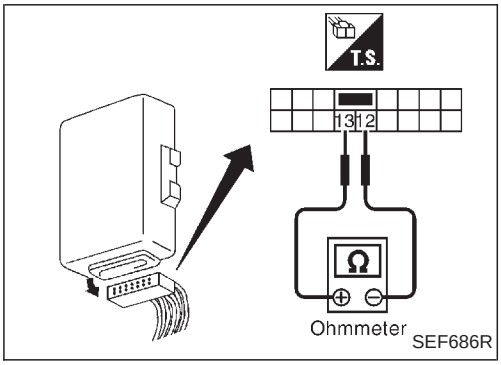

TD engine

Check continuity between terminals ⑫ and ⑬.
Measure resistance to temperature approximately as shown in "COOLANT TEMPERATURE SENSOR", "Component Inspection", EC-296.

ALTERNATOR'S "L" TERMINAL CIRCUIT

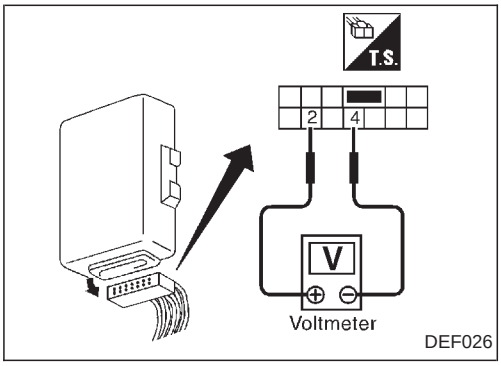

QD engine

1. Turn ignition switch OFF.
2. Disconnect harness connector from glow control unit.
3. Disconnect harness connector from the alternator's "L" terminal.
4. Check terminal voltage between terminals ② and ④ when the ignition switch is turned to ON.

   Voltage: approx. 12V

Glow Control Unit Circuit Inspection (For Cold Areas) (Cont'd)

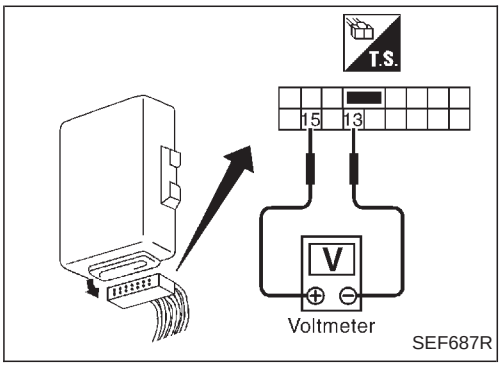

TD engine

1. Turn ignition switch OFF.
2. Disconnect harness connector from glow control unit.
3. Disconnect harness connector from the alternator's "L" terminal.
4. Check terminal voltage between terminals ⑮ and ⑬ when the ignition switch is turned to ON.
   Voltage: approx. 12V

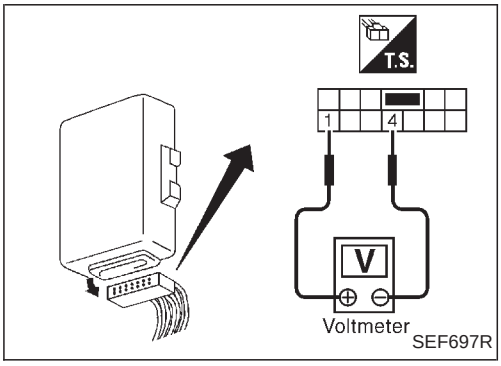

START SIGNAL INPUT CIRCUIT

QD engine

1. Turn ignition switch OFF.
2. Disconnect harness connector from the starter motor's "S" terminal.
3. Check terminal voltage between terminals ① and ④ when the ignition switch is at "START".
   Voltage: approx. 12V

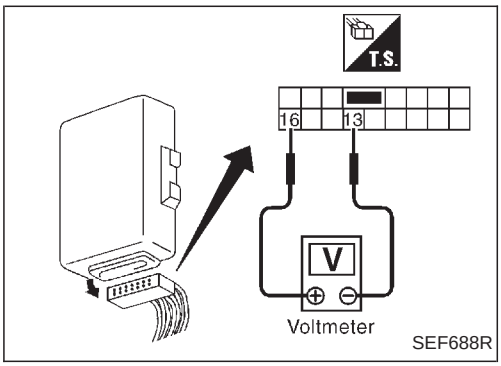

TD engine

1. Turn ignition switch OFF.
2. Disconnect harness connector from the starter motor's "S" terminal.
3. Check terminal voltage between terminals ⑯ and ⑬ when the ignition switch is at "START".
   Voltage: approx. 12V

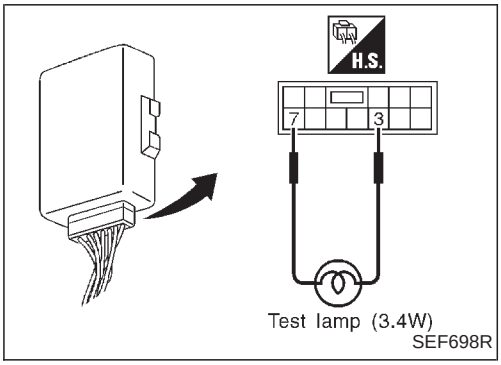

GLOW INDICATOR CONTROL CIRCUIT

QD engine

1. Turn ignition switch OFF.
2. Leave harness connector joined to glow control unit.
3. Connect test lamp to glow control unit as shown.
4. Turn ignition switch to ON and measure the time the test lamp stays lit.
   Time the test lamp should stay lit:
   Approx. 2 - 6 seconds
   (The time will vary according to coolant temperature.)

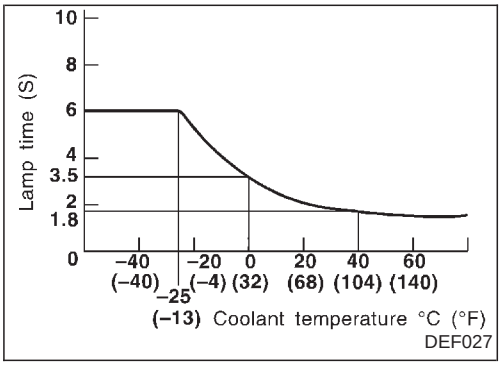

Glow Control Unit Circuit Inspection (For Cold Areas) (Cont'd)

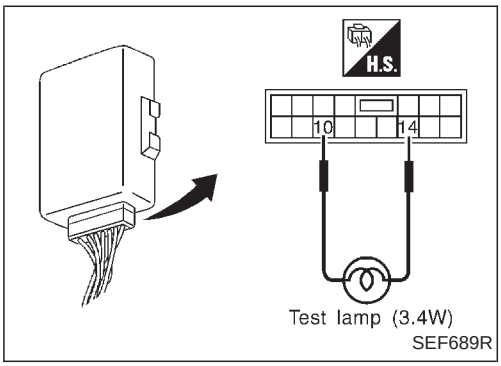

TD engine

1. Turn ignition switch OFF.
2. Leave harness connector joined to glow control unit.
3. Connect test lamp to glow control unit as shown.
4. Turn ignition switch to ON and measure the time the test lamp stays lit.

Time the test lamp should stay lit:
Approx. 2 - 6 seconds
(The time will vary according to coolant temperature.)

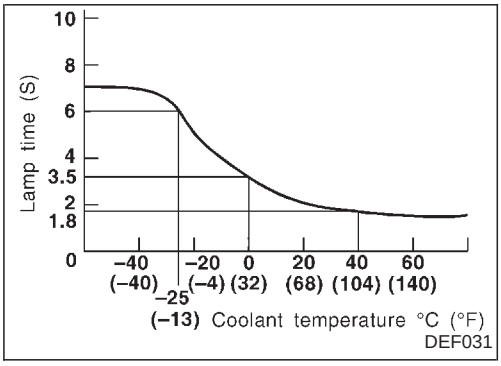

PRE-GLOW CONTROL CIRCUIT

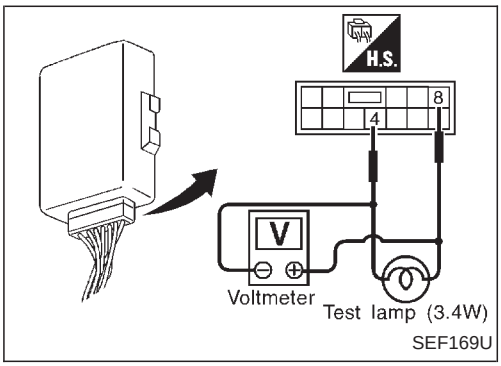

QD engine

1. Turn ignition switch OFF.
2. Leave harness connector joined to glow control unit.
3. Connect test lamp to glow control unit as shown below.
4. Turn ignition switch ON and measure terminal voltage and the time the test lamp stays lit.

Battery voltage should appear for 30 seconds at coolant temperature below 50°C (122°F).
Battery voltage should appear for 5 seconds at coolant temperature over 50°C (122°F).

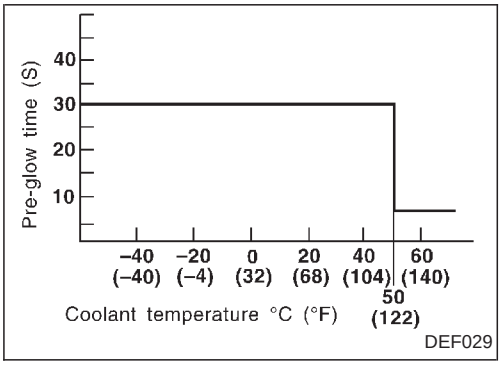

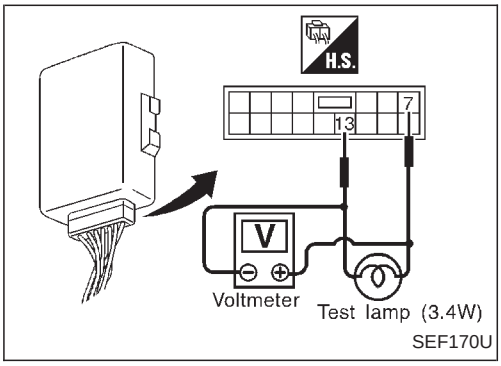

TD engine

1. Turn ignition switch OFF.
2. Leave harness connector joined to glow control unit.
3. Connect test lamp to glow control unit as shown.
4. Turn ignition switch ON and measure terminal voltage and the time the test lamp stays lit.

Battery voltage should appear for 4 to 8 seconds*.
*** (Varies with coolant temperature)**

Glow Control Unit Circuit Inspection (For Cold Areas) (Cont'd)

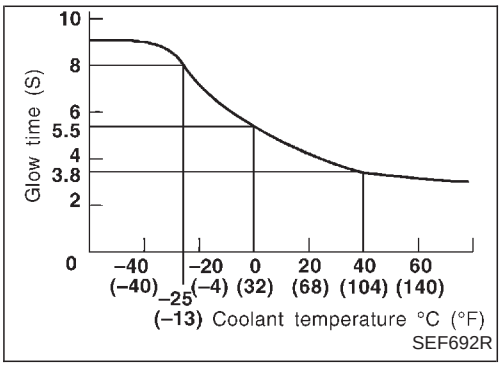

- **The time will be shortened if ignition switch is OFF for only a brief period.**
  Therefore, when measuring the time, leave ignition switch OFF for more than 1 minute, and then turn ignition switch ON.
- **When the coolant temperature is below 10°C (50°F), the battery voltage should appear for 30 seconds.**

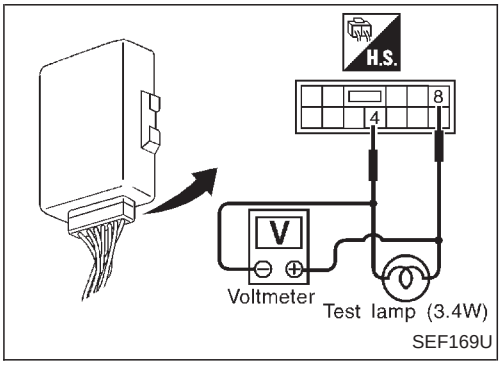

AFTER-GLOW CONTROL CIRCUIT

1. Connect test lamp to glow control unit as shown.
2. Turn ignition switch to START and run engine, then measure glow plug terminal voltage and the time the test lamp stays lit.

QD engine

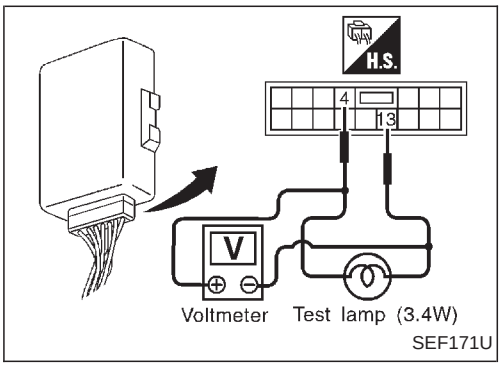

TD engine

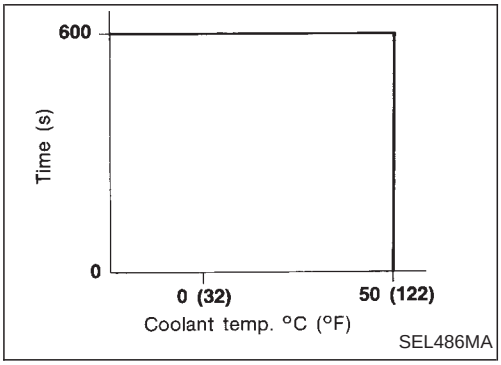

Battery voltage should continue for 10 minutes at coolant temperature below 50°C (122°F).
[If vehicle speed is above 20 km/h (12 MPH), glow plug terminal voltage should drop to 0V. If the speed drops below 10 km/h (6 MPH), the battery voltage should appear.]
The voltage should not appear at coolant temperature over 50°C (122°F).

Glow Control Unit Circuit Inspection (Except for Cold Areas)

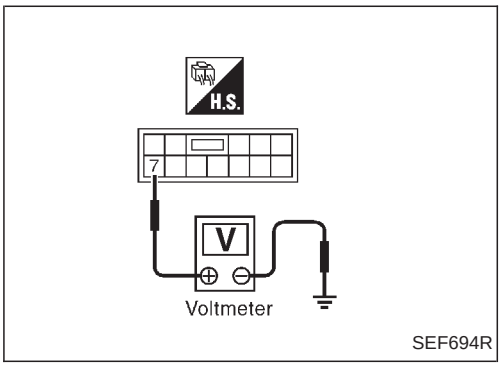

POWER SUPPLY CIRCUIT

Turn ignition switch ON and check voltage between terminal ⑦ and body ground.

Voltage: approx. 12V

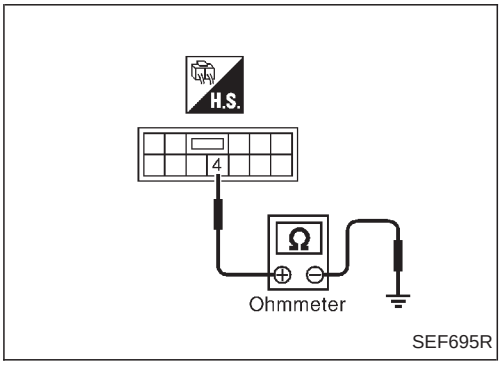

GROUND CIRCUIT

Check continuity between terminal ④ and body ground.
Continuity should exist.

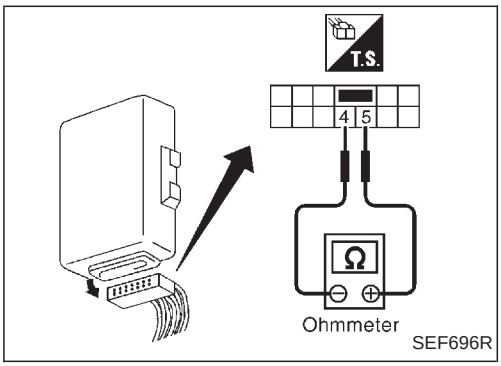

COOLANT TEMPERATURE SENSOR CIRCUIT

Check continuity between terminals ⑤ and ④.
Measure resistance to temperature approximately as shown in “COOLANT TEMPERATURE SENSOR”, “Component Inspection”, EC-296.

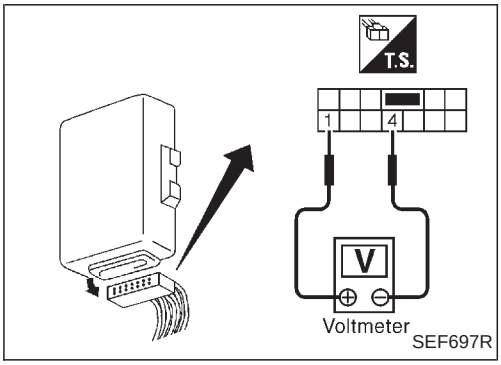

START SIGNAL INPUT CIRCUIT

1. Turn ignition switch OFF.
2. Disconnect harness connector from the starter motor’s “S” terminal.
3. Check terminal voltage between terminals ① and ④ when the ignition switch is at “START”.

   Voltage: approx. 12V

Glow Control Unit Circuit Inspection (Except for Cold Areas) (Cont'd)

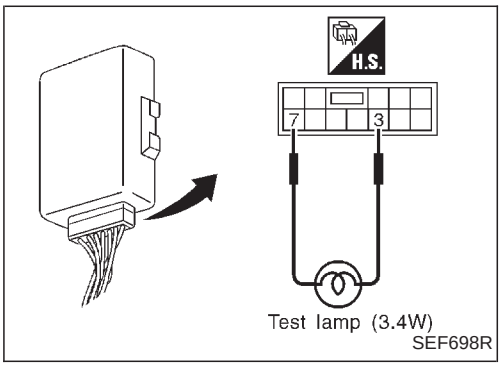

GLOW INDICATOR CONTROL CIRCUIT

1. Turn ignition switch OFF.
2. Leave harness connector joined to glow control unit.
3. Connect test lamp to glow control unit as shown.
4. Turn ignition switch to ON and measure the time the test lamp stays lit.

   Time the test lamp should stay lit:
   Approx. 2 - 6 seconds
   (The time will vary according to coolant temperature.)

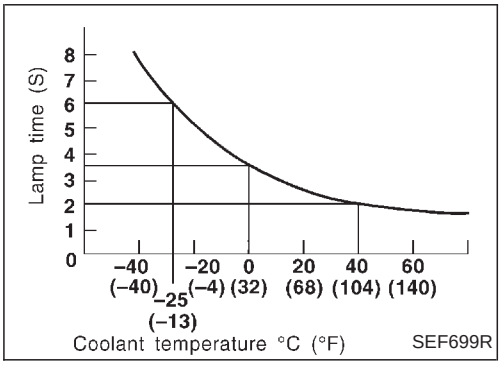

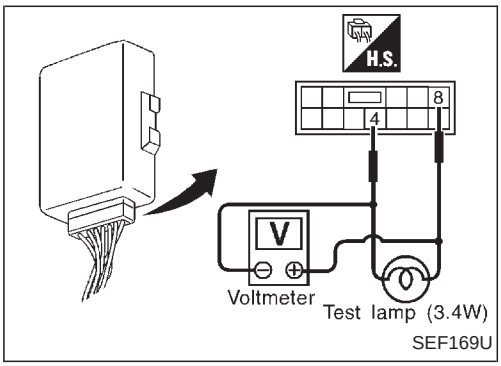

GLOW CONTROL CIRCUIT

Pre-glow control

1. Turn ignition switch OFF.
2. Leave harness connector joined to glow control unit.
3. Connect test lamp to glow control unit as shown.
4. Turn ignition switch ON and measure terminal voltage and the times the test lamp turns on and off.

1) At coolant temperature below 50°C (122°F) the battery voltage appears for 15 seconds.

- **Battery voltage should appear for 4 to 8 seconds*, and then be chopped intermittently for the rest time.**
  *** Pre-glow time (Varies with coolant temperature)**

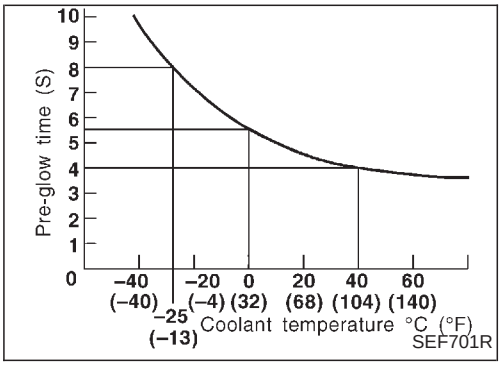

- **The time will be shortened if ignition switch is OFF for only a brief period.**
  Therefore, when measuring the time, leave ignition switch OFF for more than 1 minute, and then turn ignition switch ON.
  The test lamp turns on and off approx. 1 - 3 times after it stayed lit.

2) At coolant temperature over 50°C (122°F) the battery voltage appears for approximately 3 seconds.

Glow Control Unit Circuit Inspection (Except for Cold Areas) (Cont'd)

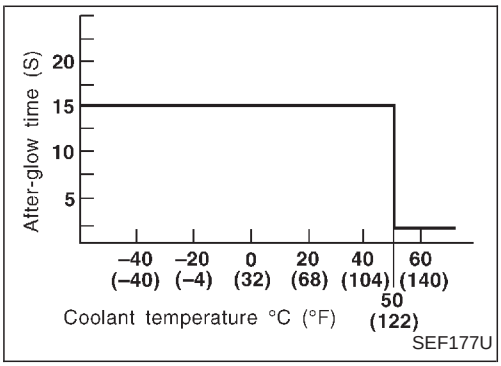

After-glow control

1. Turn ignition switch OFF.
2. Leave harness connector joined to glow control unit.
3. Connect test lamp to glow control unit as shown in "Pre-glow control".
4. Turn ignition switch to START and return to ON. Measure terminal voltage and count the times the test lamp turns on and off.

1) At coolant temperature below 50°C (122°F) the battery voltage appears intermittently for 15 seconds. Test lamp turns on and off approx. 3 times.
2) At coolant temperature over 50°C (122°F) the battery voltage appears for 2 seconds.

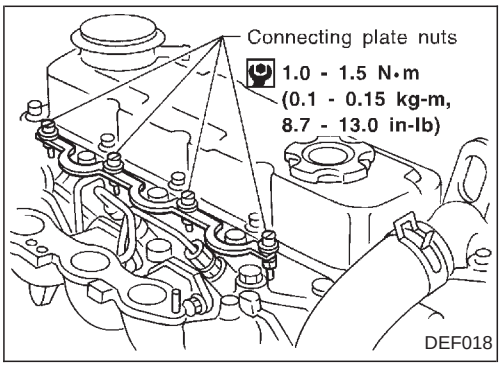

Component Inspection

GLOW PLUG CONNECTING PLATE NUTS

Check that all glow plug connecting plate nuts and harness nut are installed securely.

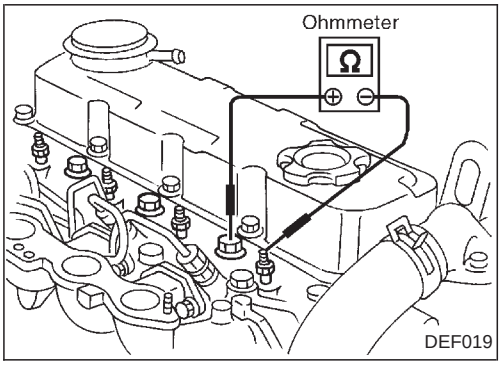

GLOW PLUG

Remove glow plug connecting plate and perform continuity test between each glow plug and cylinder head.

No continuity ... Replace glow plug.

Two manufacturer's ceramic glow plugs are provided on QD32 engine for cold areas.
A color mark of orange or blue is put on the glow plug head. Do not mix them in one engine. Do not use if dropped on the floor.

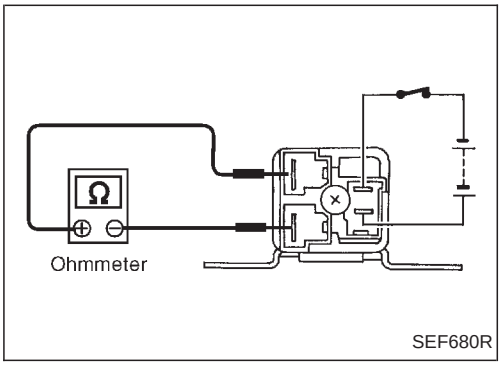

GLOW RELAY

The glow relay is normally open.

Component Inspection (Cont'd)

COOLANT TEMPERATURE SENSOR

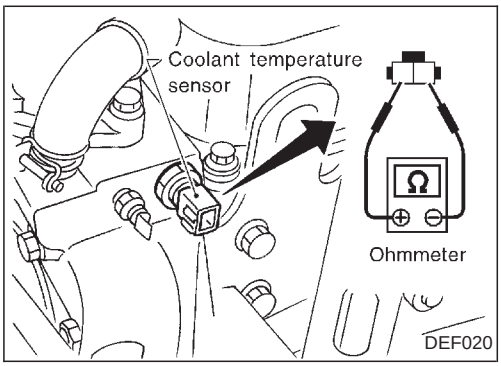

Disconnect coolant temperature harness connector and measure resistance.

Coolant temp. °C (°F)	Resistance kΩ
−25 (−13)	19
0 (32)	5.6
20 (68)	2.5
40 (104)	1.2

DROPPING RESISTOR (TD27 engine)

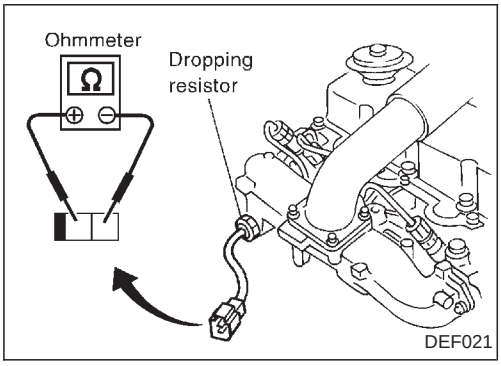

Measure resistance between terminals.

Resistance: approx. 0.27 - 0.31Ω at 20°C (68°F)

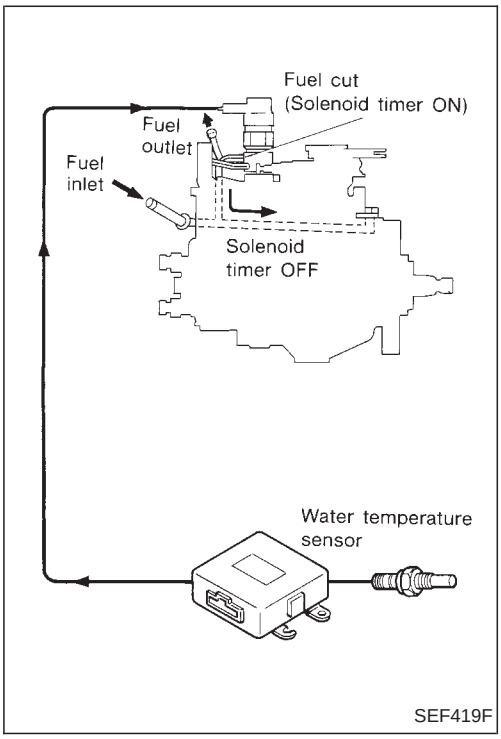

Description

To improve startability, a solenoid timer is used on models for cold areas. Its purpose is to advance fuel injection timing in relation to coolant temperature for a certain period after starting the engine.
This timer is controlled by the signal from the glow control unit. The glow control unit sends a signal to activate the advance mechanism of the fuel injection pump during cold starting.
Refer to “Circuit Diagram”, “QUICK-GLOW SYSTEM”, EC-272.

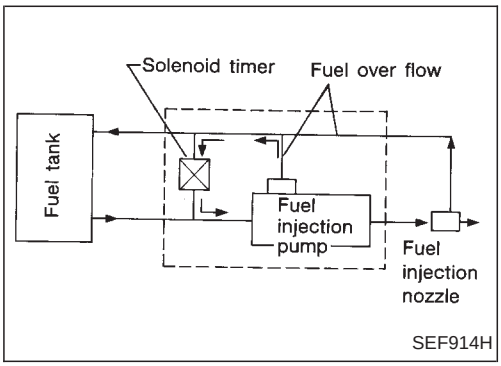

Operation

Part of the fuel in the return line returns to the fuel injection pump inlet, when the solenoid timer is OFF. When cold starting, the solenoid timer comes ON to stop the return of fuel to the inlet. This increases the fuel pressure in the fuel injection pump so that fuel injection timing advances. The duration of fuel injection timing advance varies with changes in coolant temperature.

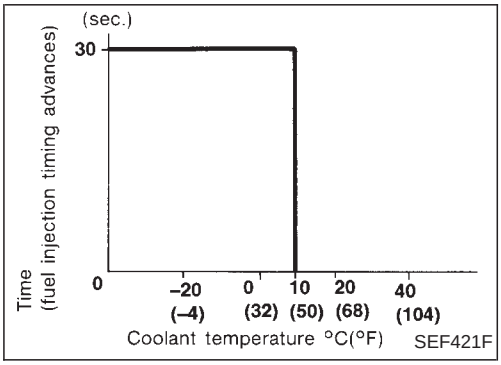

The advance duration of fuel injection timing is 30 seconds (constant) when coolant temperature is below 10°C (50°F). Above 10°C (50°F), fuel injection timing does not advance.
Refer to “Description”, “QUICK-GLOW SYSTEM”, EC-274.

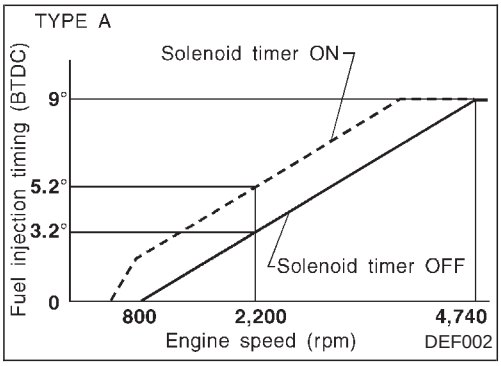

TIMER CHARACTERISTICS

The figures show the differences in fuel injection timing in relation to engine speed when the solenoid timer is both ON and OFF.
When the solenoid timer turns ON, fuel injection timing advances by approximately 2°. Thus, cold engine starting in cold weather is greatly improved.

Operation (Cont'd)

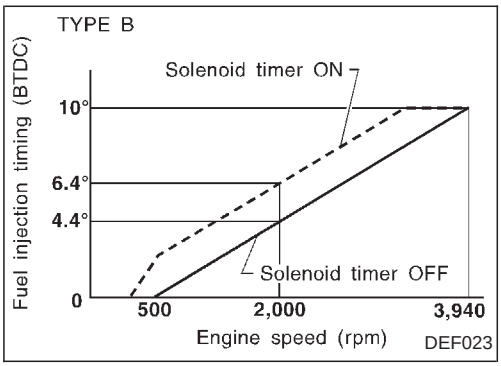

Application:

	Part No.	Pump assembly No.	Type
QD32	16700 2S615	104741-4422	B
TD27	16700 2S511	104745-7780	A

Wiring Diagram

QD ENGINE

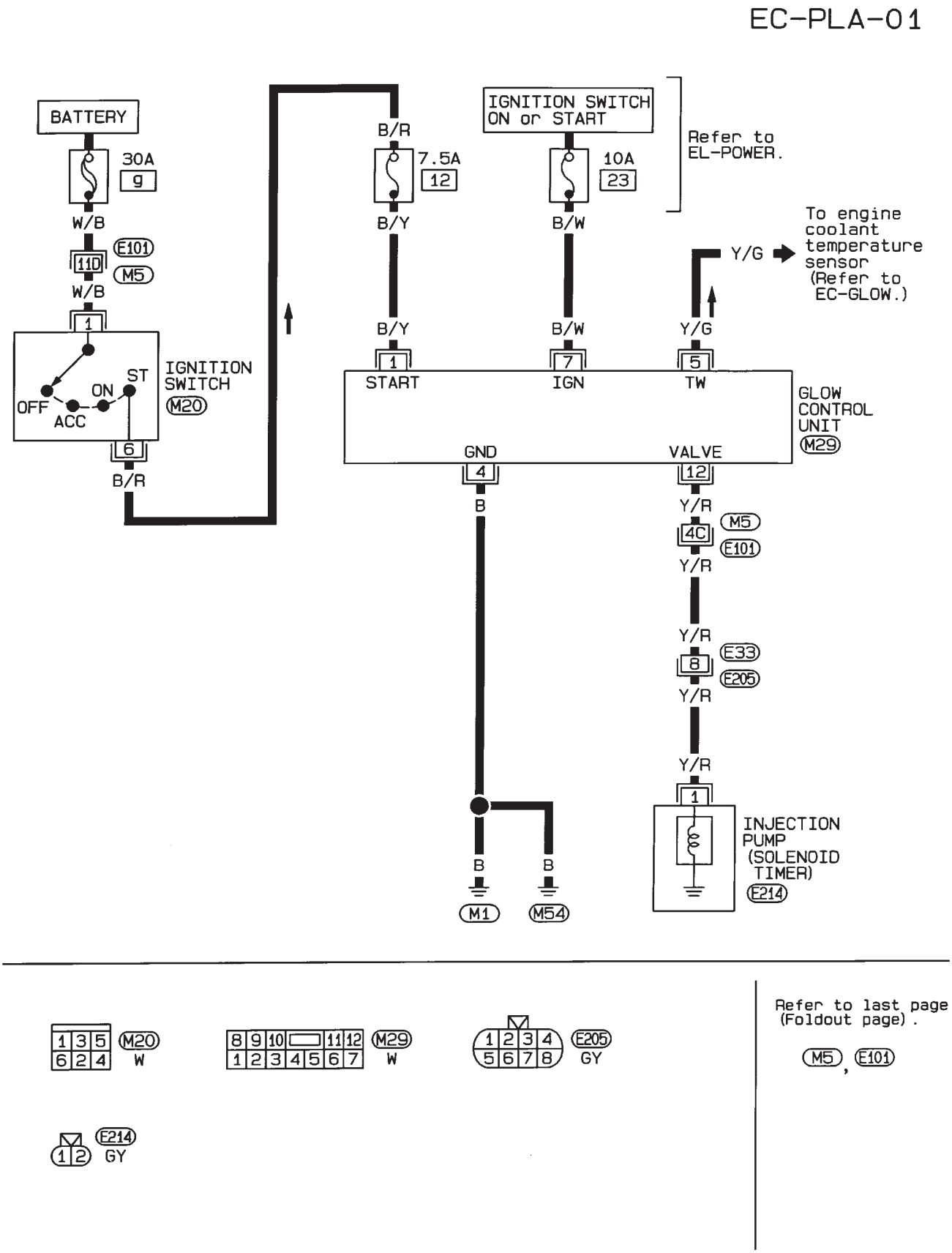

HEC372

Wiring Diagram (Cont'd)

TD ENGINE

EC-PLA-02

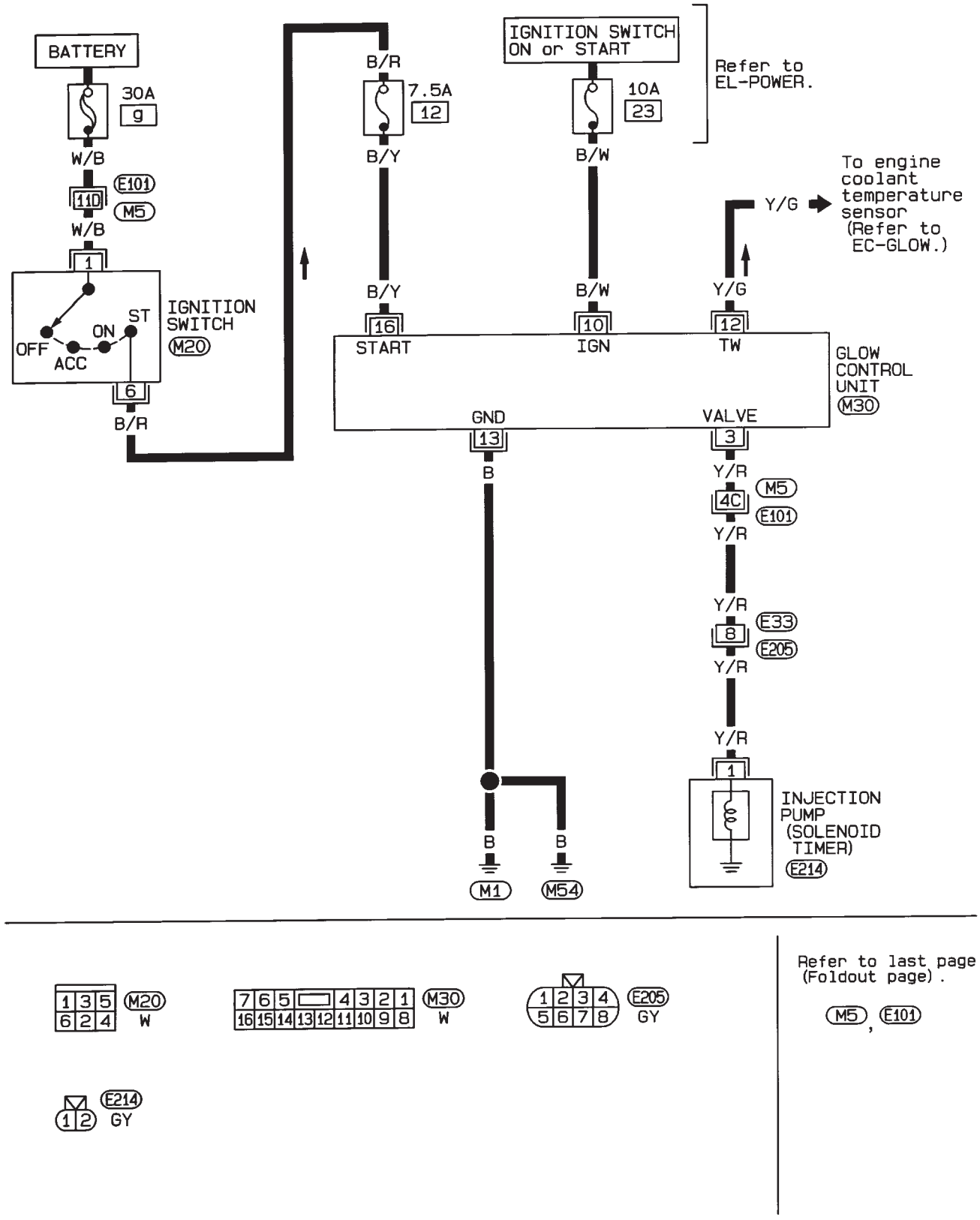

Refer to last page (Foldout page).

M5, E101

HEC395

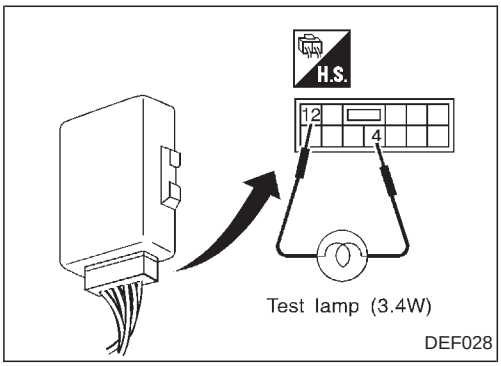

Inspection

SOLENOID TIMER CONTROL CIRCUIT

QD engine

1. Connect test lamp to glow control unit as shown.
2. Disconnect the harness connector from starter motor “S” terminal.
3. Make sure that test lamp comes on when ignition switch is turned to START.
4. Measure the time the test lamp stays lit when ignition switch is turned to ON from START.

   Time the test lamp should stay lit:

   Approx. 30 seconds at coolant temperature below 10°C (50°F)

   0 second at coolant temperature over 10°C (50°F)

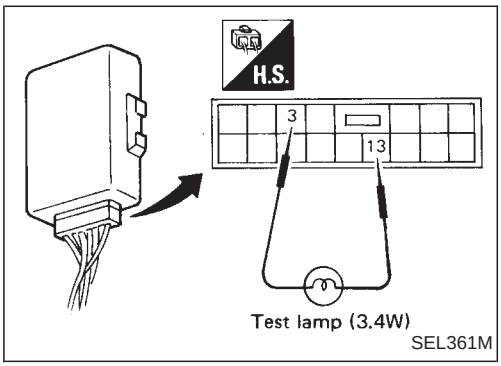

TD engine

1. Connect test lamp to glow control unit as shown.
2. Disconnect the harness connector from starter motor “S” terminal.
3. Make sure that test lamp comes on when ignition switch is turned to START.
4. Measure the time the test lamp stays lit when ignition switch is turned to ON from START.

   Time the test lamp should stay lit:

   Approx. 30 seconds at coolant temperature below 10°C (50°F)

   0 second at coolant temperature over 10°C (50°F)

Inspection (Cont'd)

SOLENOID TIMER

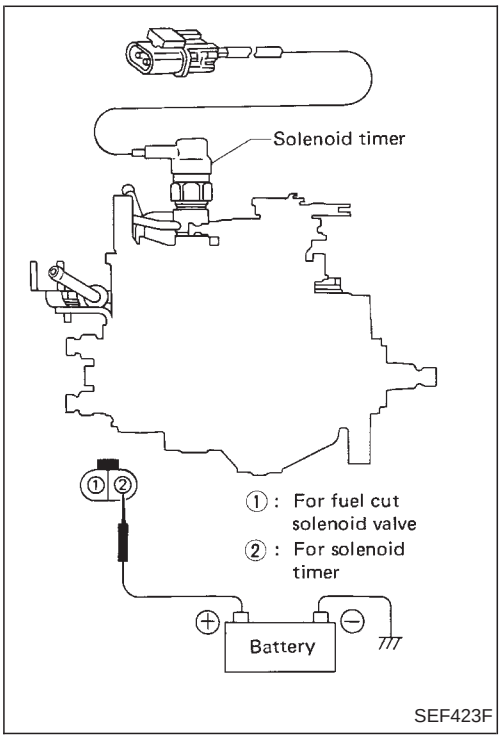

1. Disconnect solenoid timer harness and check for "clicking" sound from solenoid when battery is connected and disconnected.
   If solenoid has malfunction, replace it.

After checking, reconnect the connector.

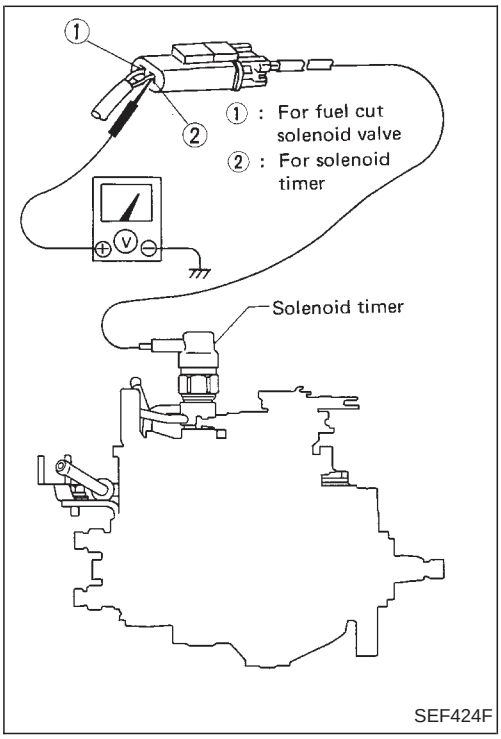

2. Disconnect coolant temperature sensor harness connector.
3. Start engine and check voltage between terminal ② and ground.

Battery voltage should exist for 30 seconds after starting engine.

If not, check harness and glow control unit.

TIMER PISTON STROKE (Using pump tester)

Measure timer piston strokes at specified fuel injection pump speed when solenoid timer is on and off.
Refer to "Injection Pump Calibration Standard" in SDS.

Wiring Diagram

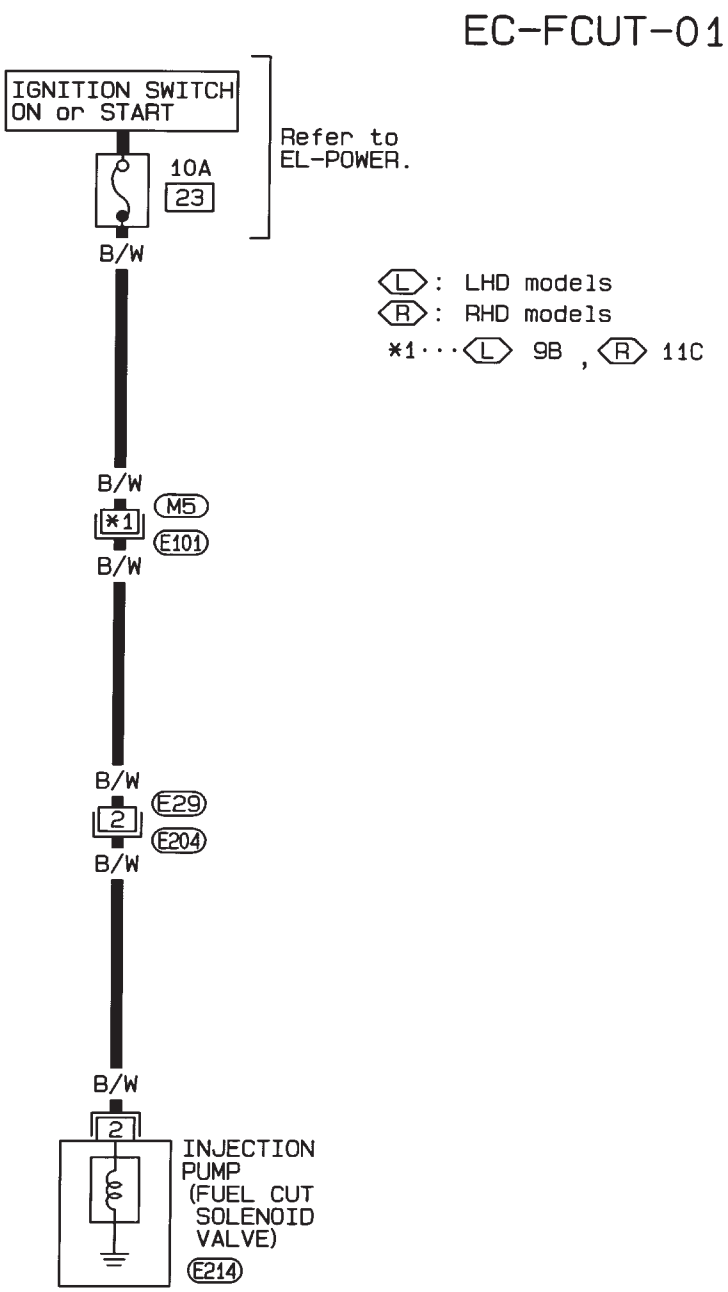

Refer to last page
(Foldout page).

M5, E101

HEC397

General Specifications

PRESSURE REGULATOR

Fuel pressure kPa (bar, kg/cm^2, psi)	
At idle	Approximately 235 (2.35, 2.4, 34)
A few seconds after ignition switch is turned OFF to ON	Approximately 294 (2.94, 3.0, 43)

Inspection and Adjustment

Idle speed*1 rpm	Base idle speed*3	750±25
No-load*2 (in "N" position)	Target idle speed	800±50
Air conditioner: ON (in "N" position)	900 or more	
Ignition timing	10°±2° BTDC	
Throttle position touch speed rpm	1,000±150	

*1: Feedback controlled and needs no adjustments
*2: Under the following conditions:
- Air conditioner switch: OFF
- Steering wheel: Kept in straight-ahead position
- Electrical load: OFF (Lights, heater fan & rear window defogger)

*3: Throttle position sensor connector is disconnected.

IGNITION COIL

Primary voltage V	Battery voltage (11 - 14)
Primary resistance [at 25°C (77°F)] Ω	Less than 1.0
Secondary resistance [at 25°C (77°F)] kΩ	7 - 13

MASS AIR FLOW SENSOR

Supply voltage V	Battery voltage (11 - 14)
Output voltage at idle V	1.3 - 1.7 at idle* 1.7 - 2.1 at 2,500 rpm*

*: Engine is warmed up sufficiently and running under no-load.

ENGINE COOLANT TEMPERATURE SENSOR

Temperature °C (°F)	Resistance
20 (68)	2.1 - 2.9 kΩ
50 (122)	0.68 - 1.00 kΩ
90 (194)	0.236 - 0.260 kΩ

FUEL PUMP

Resistance [at 25°C (77°F)] Ω	0.2 - 5.0

IACV-AAC VALVE

Resistance [at 25°C (77°F)] Ω	Approximately 10.0

INJECTOR

Resistance [at 25°C (77°F)] Ω	10 - 14

RESISTOR

Resistance [at 25°C (77°F)] kΩ	Approximately 2.2

THROTTLE POSITION SENSOR

Throttle valve conditions	Resistance [at 25°C (77°F)]
Completely closed	Approximately 0.6 kΩ
Partially open	0.6 - 4.0 kΩ
Completely open	Approximately 4.0 kΩ

HEATED OXYGEN SENSOR HEATER

Resistance [at 25°C (77°F)] Ω	2.3 - 4.3

INTAKE AIR TEMPERATURE SENSOR

Temperature °C (°F)	Resistance
20 (68)	2.1 - 2.9 kΩ
80 (176)	0.27 - 0.38 kΩ

General Specifications

CARBURETOR

Carburetor model				21M304-431
Throttle body bore mm (in)			P	30 (1.18)
			S	34 (1.34)
Large venturi diameter mm (in)			P	23.7 (0.933)
			S	30 (1.18)
Jet and air bleed size	Main jet	Standard	P	#105
			S	#170
	Main air bleed*1		P	#55
			S	#60
	Slow jet		P	#40
			S	#80
	Slow economizer air bleed		P	#70*2
			S	#80
	Slow air bleed		P	#190
			S	#60*2
	Power jet			#55
Choke type				Automatic choke
Fast idle adjustment (At 2nd cam step)	Fast idle speed rpm			2,500±100
	Clearance “A” mm (in)			0.69±0.07 (0.0272±0.0028)
Vacuum break adjustment mm (in)	Clearance “R_1”			1.72±0.16 (0.0677±0.0063)
	Clearance “R_2”			2.68±0.30 (0.1055±0.0118)
Vacuum switch operating pressure kPa (mbar, mmHg, inHg)				−80.0 (−800, −600, −23.62)
BCV operating pressure kPa (mbar, mmHg, inHg)				−81.3 (−813, −610, −24.02)
Idle speed rpm	Normal			800±50
	Air conditioner: ON			850±50
Idle CO%				1.5±0.5

P: Primary S: Secondary #: 1/100 mm
*1: This air bleed cannot be removed from small venturi.
*2: This air bleed cannot be removed from carburetor.

Inspection and Adjustment

IDLE COMPENSATOR

Unit: °C (°F)

Idle compensator partially opens	60 - 65 (140 - 149)
Idle compensator fully opens	Above 65 (149)

IGNITION COIL

Primary resistance [at 20°C (68°F)] Ω	Approx. 1
Secondary resistance [at 20°C (68°F)] kΩ	Approx. 10

MECHANICAL FUEL PUMP

Fuel pressure kPa (bar, kg/cm^2, psi)	19.6 - 26.5 (0.196 - 0.265, 0.20 - 0.27, 2.8 - 3.8)

ELECTRIC FUEL PUMP

Fuel pressure kPa (bar, kg/cm^2, psi)	17.7 - 23.5 (0.177 - 0.235, 0.18 - 0.24, 2.6 - 3.4)

DISTRIBUTOR

Firing order	1-3-4-2
Rotating direction	Counterclockwise
Air gap mm (in)	0.25 - 0.5 (0.0098 - 0.0197)
Cap insulation resistance MΩ	More than 50
Rotor head insulation resistance MΩ	More than 50

IGNITION TIMING

Type I*1	3°±2° BTDC
Type II*2	10°±5° BTDC

*1: Type I: Distributor vacuum hose disconnected and plugged
*2: Type II: Distributor vacuum hose connected

DISTRIBUTOR SPARK AND ADVANCE CURVE

Vacuum advance curve	Type A-1*1 Type A-2
Governor advance curve	Type I

*1: Type A-1 operates when intake manifold vacuum is below −80.0 kPa (−800 mbar, −600 mmHg, −23.62 inHg).

Type A-1

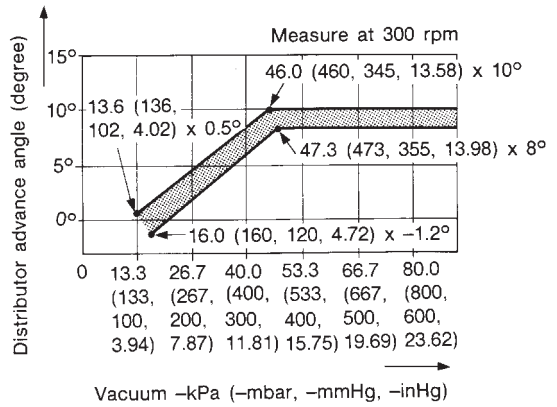

SEF801N

Type A-2

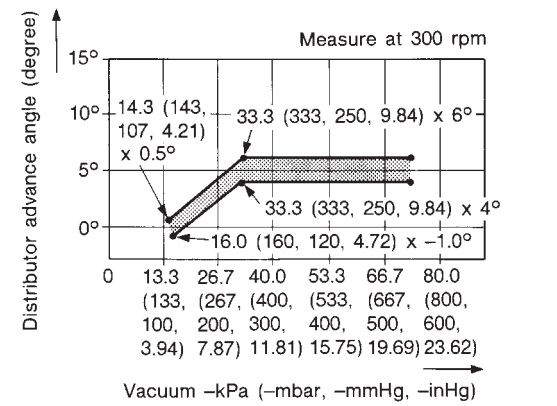

SEF803N

Type I

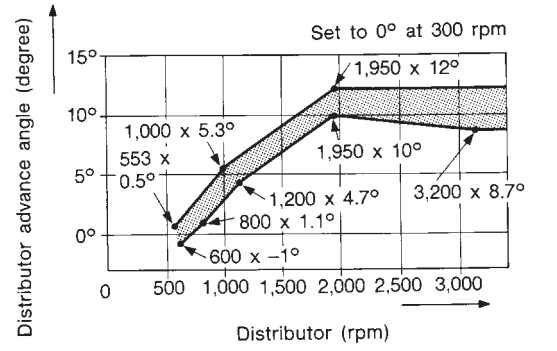

SEF805N

: Distributor control zone

General Specifications

Engine		Z24S
Carburetor model		DCR384-73
Outer dia. mm (in)	P	34 (1.34)
	S	38 (1.50)
Large venturi dia. mm (in)	P	25 (0.98)
	S	35 (1.38)
Main jet variation for altitude Standard	P	#111
	S	#165
Main air bleed*1	P	#60
	S	#60
Slow jet	P	#46
	S	#100
Slow air bleed	P	#175
	S	#0
Power jet		#55
Fast idle opening Clearance “A” mm (in)		0.88±0.07 (0.0346±0.0028)
Fuel level adjustment mm (in) Top float position “h_1”		8.6 - 9.6 (0.339 - 0.378)
Bottom float position “h_2”		4.5 - 5.5 (0.177 - 0.217)
Vacuum break operating clearance mm (in) “R_1” [Below 5±4°C (41±7.2°F)]		1.46±0.15 (0.0575±0.0059)
“R_2” [Above 20±4°C (68±7.2°F)]		3.14±0.3 (0.1236±0.0118)
BCDD operating pressure kPa (mbar, mmHg, inHg)		−78.6±0.7 (−786±7, −590±5, −23.23±0.20)

P: Primary S: Secondary #: 1/100 mm
*1: This air bleed cannot be removed from small venturi.

Inspection and Adjustment

IDLE COMPENSATOR

Unit: °C (°F)

Idle compensator fully closed	Below 60 (140)
Idle compensator fully opens	Above 75 (167)

IGNITION COIL

Primary resistance [at 20°C (68°F)] Ω	Approx. 1
Secondary resistance [at 20°C (68°F)] kΩ	Approx. 10

ELECTRIC FUEL PUMP

Fuel pressure kPa (bar, kg/cm^2, psi)	17.7 - 23.5 (0.177 - 0.235, 0.18 - 0.24, 2.6 - 3.4)

DISTRIBUTOR

Firing order	1-3-4-2
Rotating direction	Counterclockwise
Air gap mm (in)	0.25 - 0.5 (0.0098 - 0.0197)
Cap insulation resistance MΩ	More than 50
Rotor head insulation resistance MΩ	More than 50

IGNITION TIMING

Type I*1	3°±2° BTDC
Type II*2	15°±5° BTDC

*1: Type I: Distributor vacuum hose disconnected and plugged
*2: Type II: Distributor vacuum hose connected

DISTRIBUTOR SPARK AND ADVANCE CURVE

Vacuum advance curve	Type I
Governor advance curve	Type II

Type I

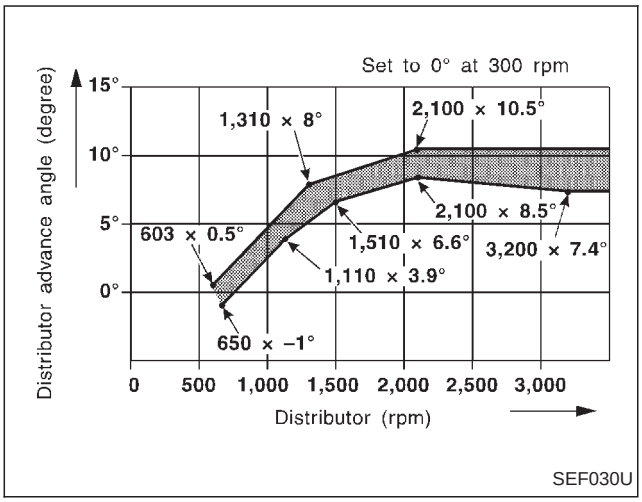

Type II

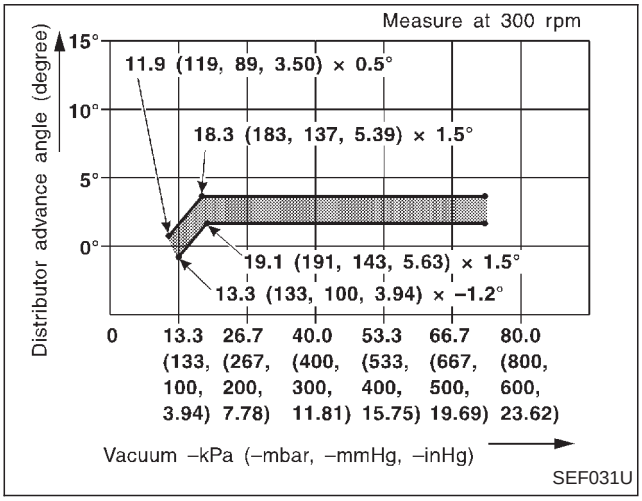

: Distributor control zone

VE-type Injection Pump

APPLICATION

Engine	Destination	Part No.	Pump assembly No.	Remarks
QD32	Thailand	16700 2S410	104741-4500	
	Australia	16700 2S604	104741-4372	
	Guatemala	16700 2S613	104741-4491	With high altitude compensator (ACS)
	General areas	16700 2S614	104741-4413	For standard models
		16700 2S615	104741-4423	For cold areas/with solenoid timer
		16700 2S616	104741-4432	With high altitude compensator (ACS)
TD27	Australia	16700 2S500	104745-7740	
	General areas	16700 2S510	104745-7770	For standard models
		16700 2S511	104745-7780	For cold areas/with solenoid timer
		16700 2S512	104745-7790	With high altitude compensator (ACS)
	Guatemala	16700 2S513	104745-7800	With high altitude compensator (ACS)
	Hong Kong & Singapore	16700 2S515	104745-7820	

INSPECTION AND ADJUSTMENT

Plunger lift

Engine	Plunger lift at TDC mm (in)		Part No.	Pump assembly No.
	Inspection	Adjustment		
QD32	0.42±0.05 (0.0165 ±0.0020)	0.42±0.02 (0.0165 ±0.0008)	16700 2S410	104741-4500
			16700 2S604	104741-4372
			16700 2S613	104741-4491
			16700 2S614	104741-4413
			16700 2S615	104741-4423
			16700 2S616	104741-4432
TD27	0.71±0.05 (0.0280 ±0.0020)	0.71±0.02 (0.0280 ±0.0008)	16700 2S500	104745-7740
	0.65±0.05 (0.0256 ±0.0020)	0.65±0.02 (0.0256 ±0.0008)	16700 2S510	104745-7770
			16700 2S511	104745-7780
			16700 2S512	104745-7790
			16700 2S513	104745-7800
	0.51±0.05 (0.0201 ±0.0020)	0.51±0.02 (0.0201 ±0.0008)	16700 2S515	104745-7820

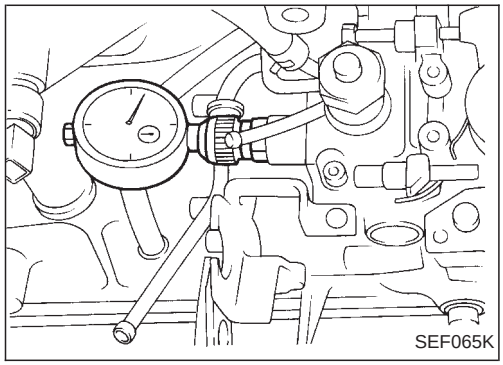

Maximum engine speed

Engine	Maximum engine speed (Under no load) rpm
QD32	4,700±100
TD27	$5{,}100^{+50}_{-150}$

Injection Nozzle

INSPECTION AND ADJUSTMENT

Injection nozzle assembly

Unit: kPa (bar, kg/cm^2, psi)

Initial injection pressure	
New	10,297 - 11,278 (103.0 - 112.8, 105 - 115, 1,493 - 1,635)
Used	9,807 - 10,297 (98.1 - 103.0, 100 - 105, 1,422 - 1,493)

Adjusting shims

Thickness mm (in)	Part No.
0.1 (0.004)	16613-65N00
0.2 (0.008)	16613-65N01
0.3 (0.012)	16613-65N02
0.4 (0.016)	16613-65N03
0.5 (0.020)	16613-65N04
0.52 (0.0205)	16613-65N05
0.54 (0.0213)	16613-65N06
0.56 (0.0220)	16613-65N07
0.58 (0.0228)	16613-65N08
0.8 (0.031)	16613-65N09

Injection Pump Calibration Standard

QD32 ENGINE MODEL

Pump rotation: Clockwise—viewed from drive side

Injection pump assembly No.	104741-4500
Part No.	16700 2S410

1. Test conditions

1 - 1 Nozzle: 105780-0060 (NP-DN0SD1510)

1 - 2 Nozzle holder: 105780-2150

1 - 3 Nozzle opening pressure: 13,043$^{+294}_{0}$ kPa (130.4$^{+2.9}_{0}$ bar, 133$^{+3}_{0}$ kg/cm^2, 1,891$^{+43}_{0}$ psi)

1 - 4 Injection pipe: 2 dia. x 6 dia. x 450 mm (0.08 dia. x 0.24 dia. x 17.72 in)

1 - 5 Fuel oil temperature: 45$^{+5}_{0}$ °C (113$^{+9}_{0}$ °F)

1 - 6 Supply pump pressure: 20 kPa (0.20 bar, 0.2 kg/cm^2, 2.8 psi)

2. Setting		Pump speed rpm	Settings	Charge air press kPa (mbar, mmHg, inHg)	Difference in delivery mℓ (Imp fl oz)
2 - 1	Timing device travel	1,000	3.6±0.2 mm (0.142±0.008 in)	—	—
2 - 2	Supply pump pressure	1,000	539±20 kPa (5.39±0.20 bar, 5.5±0.2 kg/cm^2, 78±2.8 psi)		—
2 - 3	Full-load delivery	1,000	54.8±0.5 mℓ (1.93±0.02 Imp fl oz)/1,000 st		4.5 (0.16)
2 - 4	Idle speed regulation	375	12.9±2.0 mℓ (0.45±0.07 Imp fl oz)/1,000 st		2.0 (0.07)
2 - 5	Start (Full lever)	100	90.0$^{+20.0}_{-15.0}$ mℓ (3.17$^{+0.70}_{-0.53}$ Imp fl oz)*/1,000 st		—
2 - 6	Full-load speed regulation	2,350	17.8±2.0 mℓ (0.63±0.07 Imp fl oz)/1,000 st		—
2 - 7	Load timer adjustment	1,000	2.5±0.2 mm (0.098±0.008 in)		—

3. Test specifications	Solenoid timer				
3 - 1 Timing device	N = rpm mm (in)	600 1.5±0.5 (0.059±0.020)*	1,000 3.6±0.3 (0.142±0.012)	1,800 7.5±0.5 (0.295±0.020)*	2,100 8.2$^{+0.4}_{-0.5}$ (0.323$^{+0.016}_{-0.020}$)
3 - 2 Supply pump	N = rpm kPa (bar, kg/cm^2, psi)		1,000 539±39 (5.39±0.39, 5.5±0.4, 78±6)	1,800 736±59 (7.36±0.59, 7.5±0.6, 107±9)	
3 - 3 Overflow delivery	N = rpm mℓ (Imp fl oz)/min.		1,000 390±130 (13.7±4.6)		

3 - 4 Fuel injection quantities

Speed control lever position	Pump speed rpm	Fuel delivery mℓ (Imp fl oz)/1,000 st	Charge air press kPa (mbar, mmHg, inHg)
Max. speed	1,000	54.8±1.0 (1.93±0.04)	—
	500	48.2±3.5 (1.70±0.12)*	
	800	54.1±3.5 (1.90±0.12)*	
	1,500	55.6±3.0 (1.96±0.11)*	
	1,800	57.2±3.0 (2.01±0.11)*	
	2,350	17.8±2.5 (0.63±0.09)	
	2,600	Below 5.0 (0.18)	
Switch OFF Magnet valve	375	0 (0)	—
Idling	375	12.9±2.5 (0.45±0.09)	—
3 - 5 Solenoid	Max. cut-in voltage: 8V Test voltage: 12 - 14V		

4. Dimensions	
K	3.3±0.1 mm (0.130±0.004 in)
KF	5.62±0.1 mm (0.2213±0.0039 in)
MS	0.9±0.1 mm (0.035±0.004 in)
BCS	—
Pre-stroke	0.1±0.02 mm (0.0039±0.0008 in)
Control lever angle	
α	51.5 - 59.5 degree
β	27.5 - 37.5 degree
γ	—

*: Reference value

Injection Pump Calibration Standard (Cont'd)

Control lever angle measurement position

Measure the control lever angles (α, β).

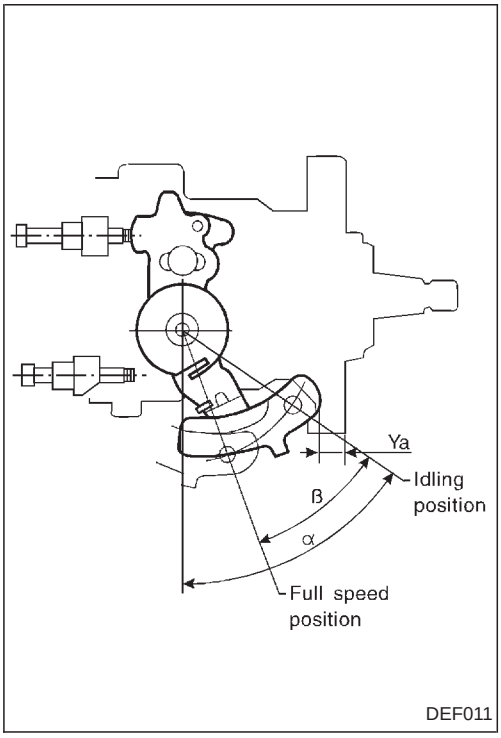

Load timer adjustment

1. Fix the control lever in the position satisfying the following conditions.
   Pump speed: 1,100 rpm
   Fuel injection quantity: 27.0±0.5 mℓ (0.95±0.02 Imp fl oz)/1,000 st
2. With the control lever positioned as described in 1. above, adjust the governor sleeve so that the timer stroke conforms to the specified values (item 2 - 7).

Control lever position			Specified values	
Pump speed rpm	Fuel injection quantity mℓ (Imp fl oz)/1,000 st	Boost pressure kPa (mbar, mmHg, inHg)	Timer stroke mm (in)	Timer stroke reduction value mm (in)
1,000	27.0±1.0 (0.95±0.04)	—	2.5±0.3 (0.098±0.012)	1.1 (0.043)
1,000	18.0±2.5 (0.63±0.09)*	—	1.4±0.5 (0.055±0.020)*	2.2 (0.087)*

*: Reference value

Injection Pump Calibration Standard (Cont'd)

QD32 ENGINE MODEL

Pump rotation: Clockwise—viewed from drive side

Injection pump assembly No.	104741-4372
Part No.	16700 2S604

1. Test conditions

1 - 1 Nozzle: 105780-0060 (NP-DN0SD1510)

1 - 2 Nozzle holder: 105780-2150

1 - 3 Nozzle opening pressure: $13{,}043^{+294}_{0}$ kPa ($130.4^{+2.9}_{0}$ bar, 133^{+3}_{0} kg/cm^2, $1{,}891^{+43}_{0}$ psi)

1 - 4 Injection pipe: 2 dia. x 6 dia. x 450 mm (0.08 dia. x 0.24 dia. x 17.72 in)

1 - 5 Fuel oil temperature: 45^{+5}_{0} °C (113^{+9}_{0} °F)

1 - 6 Supply pump pressure: 20 kPa (0.20 bar, 0.2 kg/cm^2, 2.8 psi)

2. Setting		Pump speed rpm	Settings	Charge air press kPa (mbar, mmHg, inHg)	Difference in delivery mℓ (Imp fl oz)
2 - 1	Timing device travel	1,000	3.6±0.2 mm (0.142±0.008 in)	—	—
2 - 2	Supply pump pressure	1,000	539±20 kPa (5.39±0.20 bar, 5.5±0.2 kg/cm^2, 78±2.8 psi)		—
2 - 3	Full-load delivery	1,000	56.8±0.5 mℓ (2.00±0.02 Imp fl oz)/1,000 st		4.5 (0.16)
2 - 4	Idle speed regulation	375	12.9±2.0 mℓ (0.45±0.07 Imp fl oz)/1,000 st		2.0 (0.07)
2 - 5	Start (Full lever)	100	$90.0^{+20.0}_{-15.0}$ mℓ ($3.17^{+0.70}_{-0.53}$ Imp fl oz)*/1,000 st		—
2 - 6	Full-load speed regulation	2,350	17.8±2.0 mℓ (0.63±0.07 Imp fl oz)/1,000 st		—
2 - 7	Load timer adjustment	1,000	2.5±0.2 mm (0.098±0.008 in)		—

3. Test specifications	Solenoid timer				
3 - 1 Timing device	N = rpm mm (in)	600 1.5±0.5 (0.059±0.020)*	1,000 3.6±0.3 (0.142±0.012)	1,800 7.5±0.5 (0.295±0.020)*	2,100 $8.2^{+0.4}_{-0.5}$ ($0.323^{+0.016}_{-0.020}$)
3 - 2 Supply pump	N = rpm kPa (bar, kg/cm^2, psi)		1,000 539±39 (5.39±0.39, 5.5±0.4, 78±6)	1,800 736±59 (7.36±0.59, 7.5±0.6, 107±9)	
3 - 3 Overflow delivery	N = rpm mℓ (Imp fl oz)/min.		1,000 390±130 (13.7±4.6)		

3 - 4 Fuel injection quantities

Speed control lever position	Pump speed rpm	Fuel delivery mℓ (Imp fl oz)/1,000 st	Charge air press kPa (mbar, mmHg, inHg)
Max. speed	1,000	56.8±1.0 (2.00±0.04)	—
	500	50.2±3.5 (1.77±0.12)*	
	800	56.1±3.5 (1.97±0.12)*	
	1,500	57.6±3.0 (2.03±0.11)*	
	1,800	59.2±3.0 (2.08±0.11)*	
	2,350	17.8±2.5 (0.63±0.09)	
	2,600	Below 5.0 (0.18)	
Switch OFF Magnet valve	375	0 (0)	—
Idling	375	12.9±2.5 (0.45±0.09)	—
3 - 5 Solenoid	Max. cut-in voltage: 8V Test voltage: 12 - 14V		

4. Dimensions	
K	3.3±0.1 mm (0.130±0.004 in)
KF	5.62±0.1 mm (0.2213±0.0039 in)
MS	0.9±0.1 mm (0.035±0.004 in)
BCS	—
Pre-stroke	0.1±0.02 mm (0.0039±0.0008 in)
Control lever angle	
α	51.5 - 59.5 degree
β	27.5 - 37.5 degree
γ	—

*: Reference value

Injection Pump Calibration Standard (Cont'd)

Control lever angle measurement position

Measure the control lever angles (α, β).

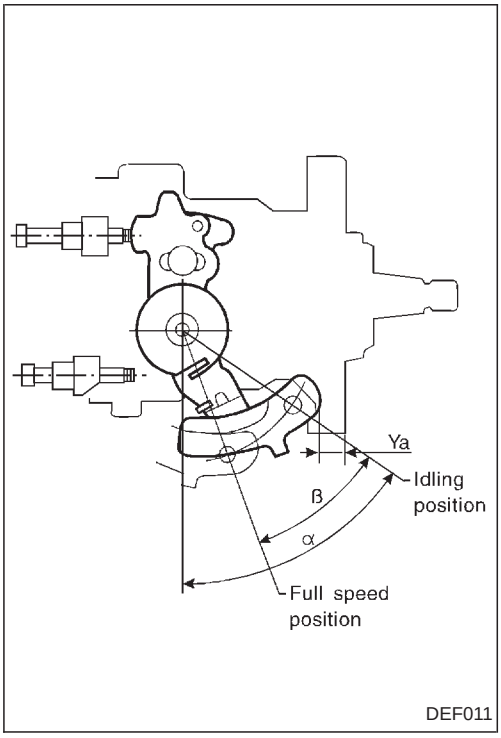

Load timer adjustment

1. Fix the control lever in the position satisfying the following conditions.
   Pump speed: 1,100 rpm
   Fuel injection quantity: 29.0±0.5 mℓ (1.09±0.04 Imp fl oz)/1,000 st
2. With the control lever positioned as described in 1. above, adjust the governor sleeve so that the timer stroke conforms to the specified values (item 2 - 7).

Control lever position			Specified values	
Pump speed rpm	Fuel injection quantity mℓ (Imp fl oz)/1,000 st	Boost pressure kPa (mbar, mmHg, inHg)	Timer stroke mm (in)	Timer stroke reduction value mm (in)
1,000	29.0±1.0 (1.02±0.04)	—	2.5±0.3 (0.098±0.012)	1.1 (0.043)
1,000	20.0±2.5 (0.70±0.09)*	—	1.4±0.5 (0.055±0.020)*	2.2 (0.087)*

*: Reference value

Injection Pump Calibration Standard (Cont'd)

QD32 ENGINE MODEL

Pump rotation: Clockwise—viewed from drive side

Injection pump assembly No.	104741-4491
Part No.	16700 2S613

1. Test conditions

1 - 1 Nozzle: 105780-0060 (NP-DN0SD1510)

1 - 2 Nozzle holder: 105780-2150

1 - 3 Nozzle opening pressure: $13{,}043^{+294}_{0}$ kPa ($130.4^{+2.9}_{0}$ bar, 133^{+3}_{0} kg/cm^2, $1{,}891^{+43}_{0}$ psi)

1 - 4 Injection pipe: 2 dia. x 6 dia. x 450 mm (0.08 dia. x 0.24 dia. x 17.72 in)

1 - 5 Fuel oil temperature: 45^{+5}_{0} °C (113^{+9}_{0} °F)

1 - 6 Supply pump pressure: 20 kPa (0.20 bar, 0.2 kg/cm^2, 2.8 psi)

2. Setting		Pump speed rpm	Settings	Charge air press kPa (mbar, mmHg, inHg)	Difference in delivery mℓ (Imp fl oz)
2 - 1	Timing device travel	1,000	4.4±0.2 mm (0.173±0.008 in)	—	—
2 - 2	Supply pump pressure	1,000	539±20 kPa (5.39±0.20 bar, 5.5±0.2 kg/cm^2, 78±2.8 psi)	—	—
2 - 3	Full-load delivery	1,000	55.3±0.5 mℓ (1.95±0.02 Imp fl oz)/1,000 st	—	4.5 (0.16)
2 - 4	Idle speed regulation	375	12.9±2.0 mℓ (0.45±0.07 Imp fl oz)/1,000 st	—	2.0 (0.07)
2 - 5	Start (Full lever)	100	$90.0^{+20.0}_{-15.0}$ mℓ ($3.17^{+0.70}_{-0.53}$ Imp fl oz)*/1,000 st	—	—
2 - 6	Full-load speed regulation	2,350	17.8±2.0 mℓ (0.63±0.07 Imp fl oz)/1,000 st	—	—
2 - 7	ACS adjustment	1,000	46.8±1.5 mℓ (1.65±0.05 Imp fl oz)/1,000 st	−21.9 (−219, −164, −6.46)	—

3. Test specifications		Solenoid timer				
3 - 1	Timing device	N = rpm mm (in)	600 1.8±0.5 (0.071±0.020)*	1,000 4.4±0.3 (0.173±0.012)	1,800 9.2±0.5 (0.362±0.020)*	2,050 $9.8^{+0.4}_{-0.5}$ ($0.386^{+0.016}_{-0.020}$)
3 - 2	Supply pump	N = rpm kPa (bar, kg/cm^2, psi)		1,000 539±39 (5.39±0.39, 5.5±0.4, 78±6)	1,800 736±59 (7.36±0.59, 7.5±0.6, 107±9)	
3 - 3	Overflow delivery	N = rpm mℓ (Imp fl oz)/min.		1,000 390±130 (13.7±4.6)		

3 - 4 Fuel injection quantities

Speed control lever position	Pump speed rpm	Fuel delivery mℓ (Imp fl oz)/1,000 st	Charge air press kPa (mbar, mmHg, inHg)
Max. speed	1,000	55.3±1.0 (1.95±0.04)	—
	500	49.0±3.5 (1.72±0.12)*	
	800	54.1±3.5 (1.90±0.12)*	
	1,500	55.3±3.0 (1.95±0.11)*	
	1,800	57.5±3.0 (2.02±0.11)*	
	2,350	17.8±2.5 (0.63±0.09)	
	2,600	Below 5.0 (0.18)	
Switch OFF Magnet valve	375	0 (0)	—
Idling	375	12.9±2.5 (0.45±0.09)	—
3 - 5 Solenoid	Max. cut-in voltage: 8V Test voltage: 12 - 14V		

4. Dimensions	
K	3.3±0.1 mm (0.130±0.004 in)
KF	5.62±0.1 mm (0.2213±0.0039 in)
MS	0.9±0.1 mm (0.035±0.004 in)
BCS	—
Pre-stroke	0.1±0.02 mm (0.0039±0.0008 in)
Control lever angle	
α	55.5±4.0 degree
β	32.5±5.0 degree
γ	—

*: Reference value
ACS: High altitude compensator

Injection Pump Calibration Standard (Cont'd)

Control lever angle measurement position

Measure the control lever angles (α, β).

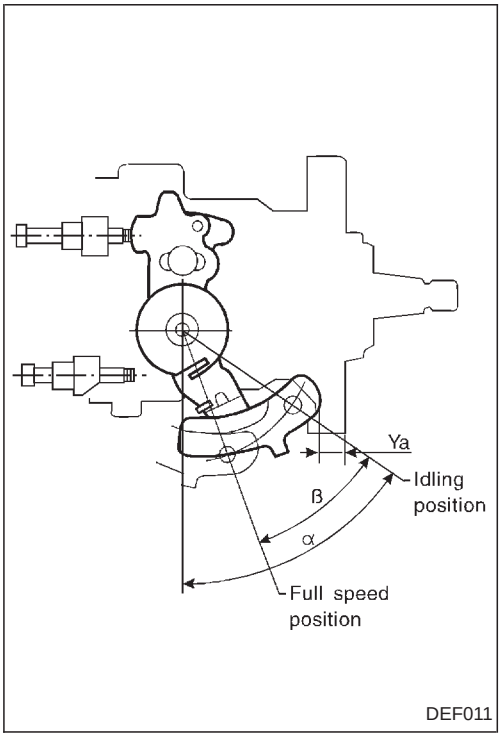

Full-load fuel injection quantity and ACS (high altitude compensator) adjusting procedure at high altitudes

1. Full-load fuel injection quantity adjustment
(1) Remove the ACS cover, the bellows and the adjusting shims.
(2) Perform all adjustments as described in the adjusting specifications, except for ACS adjustment.
2. ACS adjustment
(1) Attach the ACS cover, the bellows and the adjusting shims.
(2) At a pump speed of 1,000 rpm and referring to the value below, use the shims to adjust the fuel injection quantity decrease quantity according to the altitude.

Under the following conditions, adjust the ACS to value as specified.

Pump speed rpm	Altitude m (ft)	Atmospheric pressure kPa (mbar, mmHg, inHg)	Fuel injection q'ty mℓ (Imp fl oz)/1,000 st	Increasing rate (%)	Remarks
1,000	0	0	55.3±0.5 (1.95±0.02)	—	
	[500 (1,600)]	−5.9±3.3 (−59±33, −44±25, −1.73±0.98)	55.3 (1.95)*	Change point	
	2,000 (6,500)	−21.9 (−219, −164, −6.46)	46.8±1.5 (1.65±0.05)	15	
	4,000 (13,000)	−39.7 (−397, −298, −11.73)	37.9 (1.33)*	31	

*: Reference value

Injection Pump Calibration Standard (Cont'd)

QD32 ENGINE MODEL

Pump rotation: Clockwise—viewed from drive side

Injection pump assembly No.	104741-4413
Part No.	16700 2S614

1. Test conditions

1 - 1 Nozzle: 105780-0060 (NP-DN0SD1510)

1 - 2 Nozzle holder: 105780-2150

1 - 3 Nozzle opening pressure: $13{,}043^{+294}_{0}$ kPa ($130.4^{+2.9}_{0}$ bar, 133^{+3}_{0} kg/cm^2, $1{,}891^{+43}_{0}$ psi)

1 - 4 Injection pipe: 2 dia. x 6 dia. x 450 mm (0.08 dia. x 0.24 dia. x 17.72 in)

1 - 5 Fuel oil temperature: 45^{+5}_{0} °C (113^{+9}_{0} °F)

1 - 6 Supply pump pressure: 20 kPa (0.20 bar, 0.2 kg/cm^2, 2.8 psi)

2. Setting		Pump speed rpm	Settings	Charge air press kPa (mbar, mmHg, inHg)	Difference in delivery mℓ (Imp fl oz)
2 - 1	Timing device travel	1,000	3.5±0.2 mm (0.138±0.008 in)	—	—
2 - 2	Supply pump pressure	1,000	539±20 kPa (5.39±0.20 bar, 5.5±0.2 kg/cm^2, 78±2.8 psi)		—
2 - 3	Full-load delivery	1,000	55.3±0.5 mℓ (1.95±0.02 Imp fl oz)/1,000 st		4.5 (0.16)
2 - 4	Idle speed regulation	375	12.9±2.0 mℓ (0.45±0.07 Imp fl oz)/1,000 st		2.0 (0.07)
2 - 5	Start (Full lever)	100	$90.0^{+20.0}_{-15.0}$ mℓ ($3.17^{+0.70}_{-0.53}$ Imp fl oz)*/1,000 st		—
2 - 6	Full-load speed regulation	2,350	17.8±2.0 mℓ (0.63±0.07 Imp fl oz)/1,000 st		—

3. Test specifications	Solenoid timer				
3 - 1 Timing device	N = rpm mm (in)	600 1.4±0.5 (0.055±0.020)*	1,000 3.5±0.3 (0.138±0.012)	1,800 7.4±0.5 (0.291±0.020)*	2,050 $8.2^{+0.4}_{-0.5}$ ($0.323^{+0.016}_{-0.020}$)
3 - 2 Supply pump	N = rpm kPa (bar, kg/cm^2, psi)		1,000 539±39 (5.39±0.39, 5.5±0.4, 78±6)	1,800 736±59 (7.36±0.59, 7.5±0.6, 107±9)	
3 - 3 Overflow delivery	N = rpm mℓ (Imp fl oz)/min.	1,000 (O-ring less) 390±130 (13.7±4.6)			

3 - 4 Fuel injection quantities

Speed control lever position	Pump speed rpm	Fuel delivery mℓ (Imp fl oz)/1,000 st	Charge air press kPa (mbar, mmHg, inHg)	Difference in delivery mℓ (Imp fl oz)
Max. speed	1,000	55.3±1.0 (1.95±0.04)	—	—
	500	49.0±3.5 (1.72±0.12)*		
	800	54.1±3.5 (1.90±0.12)*		
	1,500	55.3±3.0 (1.95±0.11)*		
	1,800	57.5±3.0 (2.02±0.11)*		
	2,350	17.8±2.5 (0.63±0.09)		
	2,600	Below 5.0 (0.18)		
Switch OFF Magnet valve	375	0 (0)	—	—
Idling	375	12.9±2.5 (0.45±0.09)	—	—
3 - 5 Solenoid	Max. cut-in voltage: 8V Test voltage: 12 - 14V			

4. Dimensions	
K	3.3±0.1 mm (0.130±0.004 in)
KF	5.62±0.1 mm (0.2213±0.0039 in)
MS	0.9±0.1 mm (0.035±0.004 in)
BCS	—
Pre-stroke	0.1±0.02 mm (0.0039±0.0008 in)
Control lever angle	
α	51.5 - 59.5 degree
β	27.5 - 37.5 degree
γ	—

*: Reference value

Injection Pump Calibration Standard (Cont'd)

Control lever angle measurement position

Measure the control lever angles (α, β).

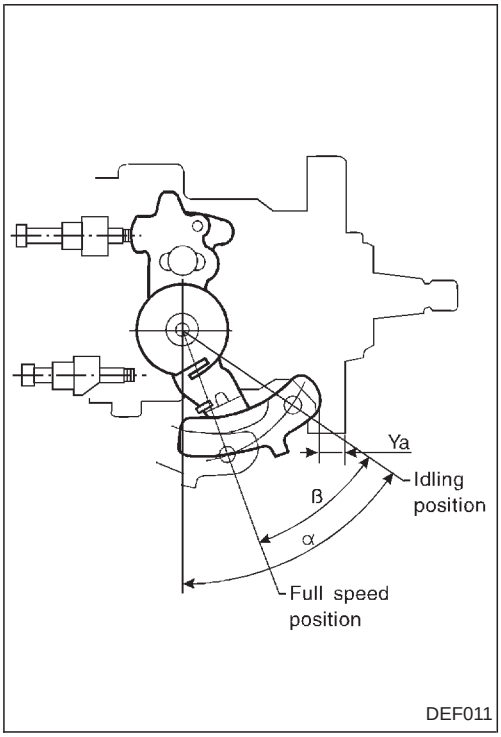

Injection Pump Calibration Standard (Cont'd)

QD32 ENGINE MODEL

Pump rotation: Clockwise—viewed from drive side

Injection pump assembly No.	104741-4423
Part No.	16700 2S615

1. Test conditions

1 - 1 Nozzle: 105780-0060 (NP-DN0SD1510)

1 - 2 Nozzle holder: 105780-2150

1 - 3 Nozzle opening pressure: $13{,}043^{+294}_{0}$ kPa ($130.4^{+2.9}_{0}$ bar, 133^{+3}_{0} kg/cm^2, $1{,}891^{+43}_{0}$ psi)

1 - 4 Injection pipe: 2 dia. x 6 dia. x 450 mm (0.08 dia. x 0.24 dia. x 17.72 in)

1 - 5 Fuel oil temperature: 45^{+5}_{0} °C (113^{+9}_{0} °F)

1 - 6 Supply pump pressure: 20 kPa (0.20 bar, 0.2 kg/cm^2, 2.8 psi)

2. Setting		Pump speed rpm	Settings	Charge air press kPa (mbar, mmHg, inHg)	Difference in delivery mℓ (Imp fl oz)
2 - 1	Timing device travel	1,000	ON 5.0±0.4 mm (0.197±0.016 in)* OFF 3.5±0.2 mm (0.138±0.008 in)		—
2 - 2	Supply pump pressure	1,000	ON 618±39 kPa (6.18±0.39 bar, 6.3±0.4 kg/cm^2, 90±6 psi)* OFF 539±20 kPa (5.39±0.20 bar, 5.5±0.2 kg/cm^2, 78±2.8 psi)		—
2 - 3	Full-load delivery	1,000	53.5±0.5 mℓ (1.88±0.02 Imp fl oz)/1,000 st	—	4.5 (0.16)
2 - 4	Idle speed regulation	375	12.9±2.0 mℓ (0.45±0.07 Imp fl oz)/1,000 st		2.0 (0.07)
2 - 5	Start (Full lever)	100	$90.0^{+20.0}_{-15.0}$ mℓ ($3.17^{+0.70}_{-0.53}$ Imp fl oz)*/1,000 st		—
2 - 6	Full-load speed regulation	2,350	17.8±2.0 mℓ (0.63±0.07 Imp fl oz)/1,000 st		—

3. Test specifications	Solenoid timer	ON	OFF			
3 - 1 Timing device	N = rpm mm (in)	1,000 5.0±0.5 (0.197±0.020)*	750 1.6±0.6 (0.063±0.024)*	1,000 3.5±0.3 (0.138±0.012)	1,800 7.4±0.5 (0.291±0.020)*	2,050 $8.2^{+0.4}_{-0.5}$ ($0.323^{+0.016}_{-0.020}$)
3 - 2 Supply pump	N = rpm kPa (bar, kg/cm^2, psi)			1,000 539±39 (5.39±0.39, 5.5±0.4, 78±6)	1,800 736±59 (7.36±0.59, 7.5±0.6, 107±9)	
3 - 3 Overflow delivery	N = rpm mℓ (Imp fl oz)/min.	1,000 (O-ring) 500±130 (17.6±4.6)				

3 - 4 Fuel injection quantities

Speed control lever position	Pump speed rpm	Fuel delivery mℓ (Imp fl oz)/1,000 st	Charge air press kPa (mbar, mmHg, inHg)
Max. speed	1,000	55.3±1.0 (1.95±0.04)	—
	500	49.0±3.5 (1.72±0.12)*	
	800	54.1±3.5 (1.90±0.12)*	
	1,500	55.3±3.0 (1.95±0.11)*	
	1,800	57.5±3.0 (2.02±0.11)*	
	2,350	17.8±2.5 (0.63±0.09)	
	2,600	Below 5.0 (0.18)	
Switch OFF Magnet valve	375	0 (0)	—
Idling	375	12.9±2.5 (0.45±0.09)	—
3 - 5 Solenoid	Max. cut-in voltage: 8V Test voltage: 12 - 14V		

4. Dimensions	
K	3.3±0.1 mm (0.130±0.004 in)
KF	5.62±0.1 mm (0.2213±0.0039 in)
MS	0.9±0.1 mm (0.035±0.004 in)
BCS	—
Pre-stroke	0.1±0.02 mm (0.0039±0.0008 in)
Control lever angle	
α	51.5 - 59.5 degree
β	27.5 - 37.5 degree
γ	—

*: Reference value
ON: Solenoid timer is ON.
OFF: Solenoid timer is OFF.
If there is no designation in the specifications for the Solenoid Timer's ON-OFF position, then the position should be regarded as OFF.

Injection Pump Calibration Standard (Cont'd)

Control lever angle measurement position

Measure the control lever angles (α, β).

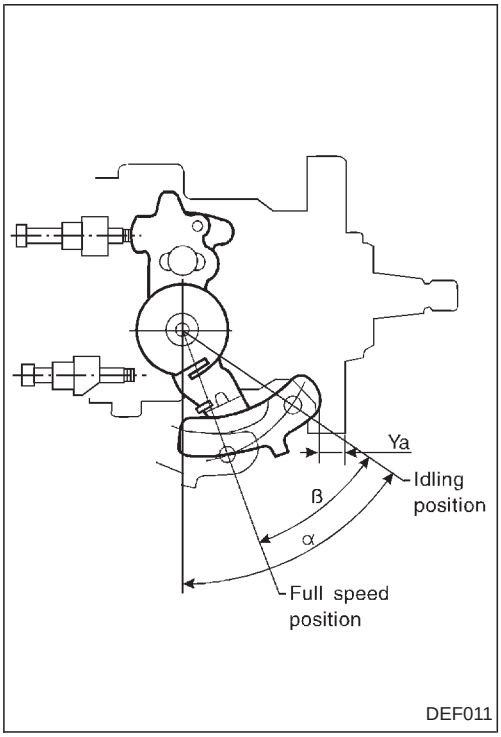

Injection Pump Calibration Standard (Cont'd)

QD32 ENGINE MODEL

Injection pump assembly No.	104741-4432
Part No.	16700 2S616

Pump rotation: Clockwise—viewed from drive side

1. Test conditions

1 - 1 Nozzle: 105780-0060 (NP-DN0SD1510)

1 - 2 Nozzle holder: 105780-2150

1 - 3 Nozzle opening pressure: $13{,}043^{+294}_{0}$ kPa ($130.4^{+2.9}_{0}$ bar, 133^{+3}_{0} kg/cm^2, $1{,}891^{+43}_{0}$ psi)

1 - 4 Injection pipe: 2 dia. x 6 dia. x 450 mm (0.08 dia. x 0.24 dia. x 17.72 in)

1 - 5 Fuel oil temperature: 45^{+5}_{0} °C (113^{+9}_{0} °F)

1 - 6 Supply pump pressure: 20 kPa (0.20 bar, 0.2 kg/cm^2, 2.8 psi)

2. Setting		Pump speed rpm	Settings	Charge air press kPa (mbar, mmHg, inHg)	Difference in delivery mℓ (Imp fl oz)
2 - 1	Timing device travel	1,000	3.5±0.2 mm (0.138±0.008 in)	—	—
2 - 2	Supply pump pressure	1,000	539±20 kPa (5.39±0.20 bar, 5.5±0.2 kg/cm^2, 78±2.8 psi)	—	—
2 - 3	Full-load delivery	1,000	55.3±0.5 mℓ (1.95±0.02 Imp fl oz)/1,000 st	—	4.4 (0.15)
2 - 4	Idle speed regulation	375	12.9±2.0 mℓ (0.45±0.07 Imp fl oz)/1,000 st	—	2.0 (0.07)
2 - 5	Start (Full lever)	100	$90.0^{+20.0}_{-15.0}$ mℓ ($3.17^{+0.70}_{-0.53}$ Imp fl oz)*/1,000 st	—	—
2 - 6	Full-load speed regulation	2,350	17.8±2.0 mℓ (0.63±0.07 Imp fl oz)/1,000 st	—	—
2 - 7	ACS adjustment	1,000	46.8±1.5 mℓ (1.65±0.05 Imp fl oz)/1,000 st	−21.9 (−219, −164, −6.46)	—

3. Test specifications		Solenoid timer				
3 - 1	Timing device	N = rpm mm (in)	600 1.4±0.5 (0.055±0.020)*	1,000 3.5±0.3 (0.138±0.012)	1,800 7.4±0.5 (0.291±0.020)*	2,050 $8.2^{+0.4}_{-0.5}$ ($0.323^{+0.016}_{-0.020}$)
3 - 2	Supply pump	N = rpm kPa (bar, kg/cm^2, psi)		1,000 539±39 (5.39±0.39, 5.5±0.4, 78±6)	1,800 736±59 (7.36±0.59, 7.5±0.6, 107±9)	
3 - 3	Overflow delivery	N = rpm mℓ (Imp fl oz)/min.		1,000 390±130 (13.7±4.6)		

3 - 4 Fuel injection quantities

Speed control lever position	Pump speed rpm	Fuel delivery mℓ (Imp fl oz)/1,000 st	Charge air press kPa (mbar, mmHg, inHg)
Max. speed	1,000	55.3±1.0 (1.95±0.04)	—
	500	49.0±3.5 (1.72±0.12)*	
	800	54.1±3.5 (1.90±0.12)*	
	1,500	55.3±3.0 (1.95±0.11)*	
	1,800	57.5±3.0 (2.02±0.11)*	
	2,350	17.8±2.5 (0.63±0.09)	
	2,600	Below 5.0 (0.18)	
Switch OFF Magnet valve	375	0 (0)	—
Idling	375	12.9±2.5 (0.45±0.09)	—
3 - 5 Solenoid	Max. cut-in voltage: 8V Test voltage: 12 - 14V		

4. Dimensions	
K	3.3±0.1 mm (0.130±0.004 in)
KF	5.62±0.1 mm (0.2213±0.0039 in)
MS	0.9±0.1 mm (0.035±0.004 in)
BCS	—
Pre-stroke	0.1±0.02 mm (0.0039±0.0008 in)
Control lever angle	
α	51.5 - 59.5 degree
β	27.5 - 37.5 degree
γ	—

*: Reference value
ACS: High altitude compensator

Injection Pump Calibration Standard (Cont'd)

Control lever angle measurement position

Measure the control lever angles (α, β).

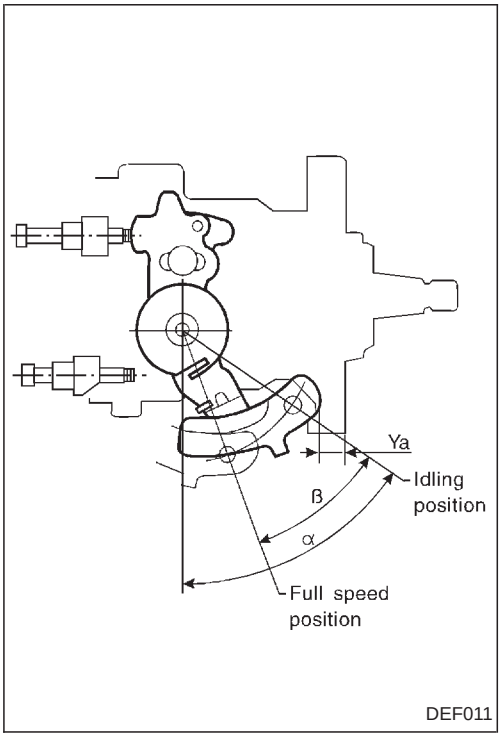

Full-load fuel injection quantity and ACS (high altitude compensator) adjusting procedure at high altitudes

1. Full-load fuel injection quantity adjustment
(1) Remove the ACS cover, the bellows and the adjusting shims.
(2) Perform all adjustments as described in the adjusting specifications, except for ACS adjustment.
2. ACS adjustment
(1) Attach the ACS cover, the bellows and the adjusting shims.
(2) At a pump speed of 1,000 rpm and referring to the value below, use the shims to adjust the fuel injection quantity decrease quantity according to the altitude.

Under the following conditions, adjust the ACS to value as specified.

Pump speed rpm	Altitude m (ft)	Atmospheric pressure kPa (mbar, mmHg, inHg)	Fuel injection q'ty mℓ (Imp fl oz)/1,000 st	Increasing rate (%)	Remarks
1,000	0	0	55.3±1.0 (1.95±0.04)	—	—
	[500 (1,600)]	−5.9±3.3 (−59±33, −44±25, −1.73±0.98)	55.3 (1.95)*	Change point	—
	2,000 (6,500)	−21.9 (−219, −164, −6.46)	46.8±2.0 (1.65±0.07)	15	—
	4,000 (13,000)	−39.7 (−397, −298, −11.73)	37.9 (1.33)*	31	—

*: Reference value

Injection Pump Calibration Standard (Cont'd)

TD27 ENGINE MODEL

Injection pump assembly No.	104745-7740
Part No.	16700 2S500

Pump rotation: Clockwise—viewed from drive side

1. Test conditions

1 - 1 Nozzle: 105780-0060 (NP-DN0SD1510)

1 - 2 Nozzle holder: 105780-2150

1 - 3 Nozzle opening pressure: $13{,}043^{+294}_{0}$ kPa ($130.4^{+2.9}_{0}$ bar, 133^{+3}_{0} kg/cm^2, $1{,}891^{+43}_{0}$ psi)

1 - 4 Injection pipe: 2 dia. x 6 dia. x 450 mm (0.08 dia. x 0.24 dia. x 17.72 in)

1 - 5 Fuel oil temperature: 45^{+5}_{0} °C (113^{+9}_{0} °F)

1 - 6 Supply pump pressure: 20 kPa (0.20 bar, 0.2 kg/cm^2, 2.8 psi)

2. Setting		Pump speed rpm	Settings	Charge air press kPa (mbar, mmHg, inHg)	Difference in delivery mℓ (Imp fl oz)
2 - 1	Timing device travel	1,100	1.9±0.2 mm (0.075±0.008 in)		—
2 - 2	Supply pump pressure	1,100	432±29 kPa (4.32±0.29 bar, 4.4±0.3 kg/cm^2, 63±4 psi)		—
2 - 3	Full-load delivery	1,100	49.9±0.5 mℓ (1.76±0.02 Imp fl oz)/1,000 st		4.0 (0.14)
2 - 4	Idle speed regulation	350	7.1±2.0 mℓ (0.25±0.07 Imp fl oz)/1,000 st	—	2.0 (0.07)
2 - 5	Start (Full lever)	100	$60.0^{+20.0}_{-15.0}$ mℓ ($2.11^{+0.70}_{-0.53}$ Imp fl oz)*/1,000 st		—
2 - 6	Full-load speed regulation	2,550	10.9±2.0 mℓ (0.38±0.07 Imp fl oz)/1,000 st		3.0 (0.11)
2 - 7	Load timer adjustment	1,100	1.2±0.2 mm (0.047±0.008 in)		—

3. Test specifications					
3 - 1 Timing device	N = rpm mm (in)	850 0.5±0.5 (0.020±0.020)*	1,100 1.9±0.3 (0.75±0.012)	1,700 4.4±0.5 (0.173±0.020)*	2,300 $6.1^{+0.4}_{-0.5}$ ($0.240^{+0.016}_{-0.020}$)
3 - 2 Supply pump	N = rpm kPa (bar, kg/cm^2, psi)		1,100 432±39 (4.32±0.39, 4.4±0.4, 63±6)	1,700 559±39 (5.59±0.39, 5.7±0.4, 81±6)*	
3 - 3 Overflow delivery	N = rpm mℓ (Imp fl oz)/min.		1,100 390±130 (13.7±4.6)		

3 - 4 Fuel injection quantities

Speed control lever position	Pump speed rpm	Fuel delivery mℓ (Imp fl oz)/1,000 st	Charge air press kPa (mbar, mmHg, inHg)
Max. speed	1,100	49.9±1.0 (1.76±0.04)	—
	500	41.3±2.5 (1.45±0.09)*	
	2,150	46.3±2.5 (1.63±0.09)*	
	2,350	37.0±5.0 (1.30±0.18)*	
	2.550	10.9±2.5 (0.38±0.09)	
	2,700	Below 5.0 (0.18)	
Switch OFF Magnet valve	350	0 (0) Idle	—
Idling	350	7.7±2.5 (0.27±0.09)	—
3 - 5 Solenoid	Max. cut-in voltage: 8V Test voltage: 12 - 14V		

4. Dimensions	
K	3.3±0.1 mm (0.130±0.004 in)
KF	5.8±0.1 mm (0.228±0.004 in)
MS	0.9±0.1 mm (0.035±0.004 in)
BCS	—
Pre-stroke	0.1±0.02 mm (0.0039±0.0008 in)
Control lever angle	
α	21.0 - 29.0 degree
β	31.0 - 41.0 degree
γ	—

*: Reference value

Injection Pump Calibration Standard (Cont'd)

Control lever angle measurement position

Measure the control lever angles (α, β).

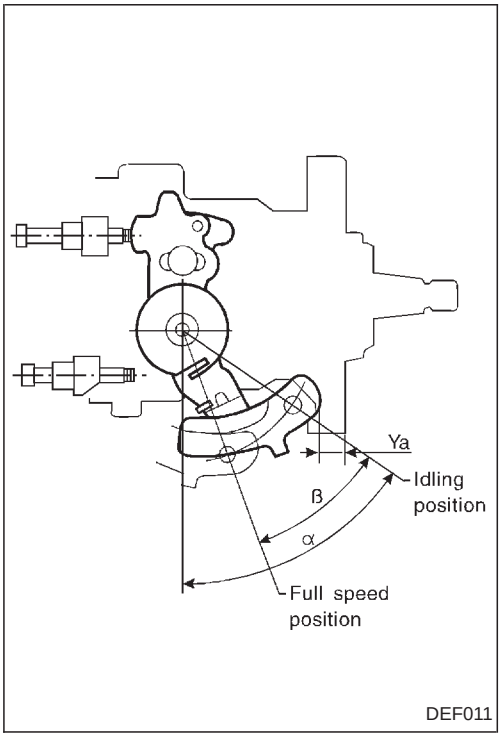

Load timer adjustment

1. Fix the control lever in the position satisfying the following conditions.
   Pump speed: 1,100 rpm
   Fuel injection quantity: 31.0±0.5 mℓ (1.09±0.02 Imp fl oz)/1,000 st
2. With the control lever positioned as described in 1. above, adjust the governor sleeve so that the timer stroke conforms to the specified values (item 2 - 7).

Control lever position			Specified values	
Pump speed rpm	Fuel injection quantity mℓ (Imp fl oz)/1,000 st	Boost pressure kPa (mbar, mmHg, inHg)	Timer stroke mm (in)	Timer stroke reduction value mm (in)
1,100	31.0±0.5 (1.09±0.02)	—	1.2±0.3 (0.047±0.012)	0.7 (0.028)
1,100	22.0±2.5 (0.77±0.09)*	—	0.6±0.5 (0.024±0.020)*	1.3 (0.051)*

*: Reference value

Injection Pump Calibration Standard (Cont'd)

TD27 ENGINE MODEL

Injection pump assembly No.	104745-7770
Part No.	16700 2S510

Pump rotation: Clockwise—viewed from drive side

1. Test conditions

1 - 1 Nozzle: 105780-0060 (NP-DN0SD1510)

1 - 2 Nozzle holder: 105780-2150

1 - 3 Nozzle opening pressure: $13{,}043^{+294}_{0}$ kPa ($130.4^{+2.9}_{0}$ bar, 133^{+3}_{0} kg/cm^2, $1{,}891^{+43}_{0}$ psi)

1 - 4 Injection pipe: 2 dia. x 6 dia. x 450 mm (0.08 dia. x 0.24 dia. x 17.72 in)

1 - 5 Fuel oil temperature: 45^{+5}_{0} °C (113^{+9}_{0} °F)

1 - 6 Supply pump pressure: 20 kPa (0.20 bar, 0.2 kg/cm^2, 2.8 psi)

2. Setting		Pump speed rpm	Settings	Charge air press kPa (mbar, mmHg, inHg)	Difference in delivery mℓ (Imp fl oz)
2 - 1	Timing device travel	1,700	4.7 - 5.1 mm (0.185 - 0.201 in)	—	—
2 - 2	Supply pump pressure	1,700	549 - 608 kPa (5.49 - 6.08 bar, 5.6 - 6.2 kg/cm^2, 80 - 88 psi)		—
2 - 3	Full-load delivery	1,100	49.8 - 50.8 mℓ (1.75 - 1.79 Imp fl oz)/1,000 st		3.0 (0.11)
2 - 4	Idle speed regulation	350	5.3 - 9.3 mℓ (0.19 - 0.33 Imp fl oz)/1,000 st		2.0 (0.07)
2 - 5	Start	100	45.0 - 80.0 mℓ (1.58 - 2.82 Imp fl oz)/1,000 st		—
2 - 6	Full-load speed regulation	2,350	32.2 - 36.2 mℓ (1.13 - 1.27 Imp fl oz)/1,000 st		—

3. Test specifications					
3 - 1 Timing device	N = rpm mm (in)	1,100 2.0 - 3.2 (0.079 - 0.126)	1,700 4.6 - 5.2 (0.181 - 0.205)	2,150 6.0 - 7.2 (0.236 - 0.283)	2,550 6.8 - 7.8 (0.268 - 0.307)
3 - 2 Supply pump	N = rpm kPa (bar, kg/cm^2, psi)		1,700 549 - 608 (5.49 - 6.08, 5.6 - 6.2, 80 - 88)	2,150 647 - 706 (6.47 - 7.06, 6.6 - 7.2, 94 - 102)	
3 - 3 Overflow delivery	N = rpm mℓ (Imp fl oz)/ min.	1,100 258 - 522 (9.1 - 18.4)			

3 - 4 Fuel injection quantities

Speed control lever position	Pump speed rpm	Fuel delivery mℓ (Imp fl oz)/ 1,000 st	Charge air press kPa (mbar, mmHg, inHg)
Max. speed	1,100	49.3 - 51.3 (1.74 - 1.81)	—
	600	48.8 - 52.8 (1.72 - 1.86)	
	2,150	38.7 - 42.9 (1.36 - 1.51)	
	2,350	31.7 - 36.7 (1.12 - 1.29)	
	2,550	5.6 - 14.6 (0.20 - 0.51)	
	2,700	Below 5.0 (0.18)	
Switch OFF Magnet valve	350	0 (0)	—
Idling	350	5.3 - 9.3 (0.19 - 0.33)	—
	450	Below 3.0 (0.11)	
3 - 5 Solenoid	Max. cut-in voltage: 8V Test voltage: 12 - 14V		

4. Dimensions	
K	3.2 - 3.4 mm (0.126 - 0.134 in)
KF	5.7 - 5.9 mm (0.224 - 0.232 in)
MS	0.8 - 1.0 mm (0.031 - 0.039 in)
BCS	—
Pre-stroke	—
Control lever angle	
α	51.5 - 59.5 degree
β	31.0 - 41.0 degree
γ	—

Injection Pump Calibration Standard (Cont'd)

Control lever angle measurement position

Measure the control lever angles (α, β) at hole "A".

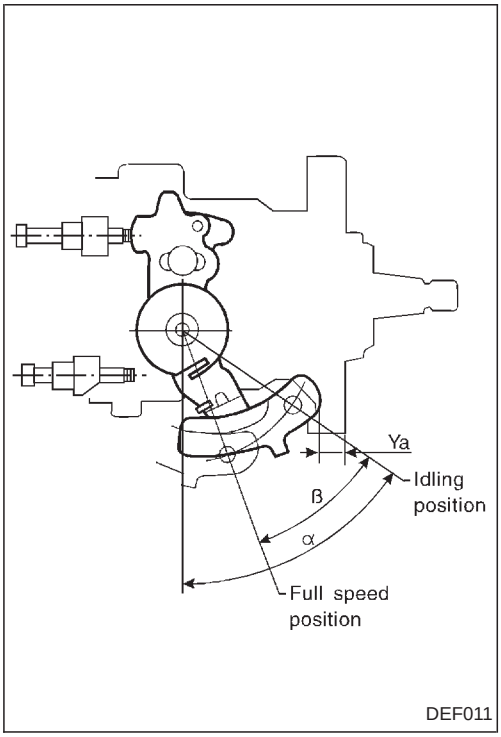

Injection Pump Calibration Standard (Cont'd)

TD27 ENGINE MODEL

Pump rotation: Clockwise—viewed from drive side

Injection pump assembly No.	104745-7780
Part No.	16700 2S511

1. Test conditions

1 - 1 Nozzle: 105780-0060 (NP-DN0SD1510)

1 - 2 Nozzle holder: 105780-2150

1 - 3 Nozzle opening pressure: $13{,}043^{+294}_{0}$ kPa ($130.4^{+2.9}_{0}$ bar, 133^{+3}_{0} kg/cm^2, $1{,}891^{+43}_{0}$ psi)

1 - 4 Injection pipe: 2 dia. x 6 dia. x 450 mm (0.08 dia. x 0.24 dia. x 17.72 in)

1 - 5 Fuel oil temperature: 45^{+5}_{0} °C (113^{+9}_{0} °F)

1 - 6 Supply pump pressure: 20 kPa (0.20 bar, 0.2 kg/cm^2, 2.8 psi)

2. Setting		Pump speed rpm	Settings	Charge air press kPa (mbar, mmHg, inHg)	Difference in delivery mℓ (Imp fl oz)
2 - 1	Timing device travel	1,100	ON 3.9 - 4.7 mm (0.154 - 0.185 in) OFF 2.4 - 2.8 mm (0.094 - 0.110 in)	—	—
2 - 2	Supply pump pressure	1,100	ON 441 - 520 kPa (4.41 - 5.20 bar, 4.5 - 5.3 kg/cm^2, 64 - 75 psi) OFF 343 - 402 kPa (3.43 - 4.02 bar, 3.5 - 4.1 kg/cm^2, 50 - 58 psi)		—
2 - 3	Full-load delivery	1,100	49.8 - 50.8 mℓ (1.75 - 1.79 Imp fl oz)/1,000 st		3.0 (0.11)
2 - 4	Idle speed regulation	350	5.3 - 9.3 mℓ (0.19 - 0.33 Imp fl oz)/1,000 st		2.0 (0.07)
2 - 5	Start	100	45.0 - 80.0 mℓ (1.58 - 2.82 Imp fl oz)/1,000 st		—
2 - 6	Full-load speed regulation	2,350	32.2 - 36.2 mℓ (1.13 - 1.27 Imp fl oz)/1,000 st		—

3. Test specifications		Solenoid timer	ON		OFF			
3 - 1	Timing device	N = rpm mm (in)	1,100 3.8 - 4.8 (0.150 - 0.189)	1,700 5.7 - 7.3 (0.224 - 0.287)	1,100 2.3 - 2.9 (0.091 - 0.114)	1,700 4.3 - 5.5 (0.169 - 0.217)		2,550 6.8 - 7.8 (0.268 - 0.307)
3 - 2	Supply pump	N = rpm kPa (bar, kg/cm^2, psi)	1,100 441 - 520 (4.41 - 5.20, 4.5 - 5.3, 64 - 75)	1,700 579 - 657 (5.79 - 6.57, 5.9 - 6.7, 84 - 95)	1,100 343 - 402 (3.43 - 4.02, 3.5 - 4.1, 50 - 58)	1,700 481 - 539 (4.81 - 5.39, 4.9 - 5.5, 70 - 78)	2,150 569 - 628 (5.69 - 6.28, 5.8 - 6.4, 82 - 91)	
3 - 3	Overflow delivery	N = rpm mℓ (Imp fl oz)/min.	1,100 258 - 522 (9.1 - 18.4)		—			

3 - 4 Fuel injection quantities

Speed control lever position	Pump speed rpm	Fuel delivery mℓ (Imp fl oz)/1,000 st	Charge air press kPa (mbar, mmHg, inHg)
Max. speed	1,100	49.3 - 51.3 (1.74 - 1.81)	—
	600	48.8 - 52.8 (1.72 - 1.86)	
	2,150	38.7 - 42.9 (1.36 - 1.51)	
	2,350	31.7 - 36.7 (1.12 - 1.29)	
	2,550	5.6 - 14.6 (0.20 - 0.51)	
	2,700	Below 5.0 (0.18)	
Switch OFF Magnet valve	350	0 (0)	—
Idling	350	5.3 - 9.3 (0.19 - 0.33)	—
	450	Below 3.0 (0.11)	
3 - 5 Solenoid	Max. cut-in voltage: 8V Test voltage: 12 - 14V		

4. Dimensions	
K	3.2 - 3.4 mm (0.126 - 0.134 in)
KF	5.7 - 5.9 mm (0.224 - 0.232 in)
MS	0.8 - 1.0 mm (0.031 - 0.039 in)
BCS	—
Pre-stroke	—
Control lever angle	
α	51.5 - 59.5 degree
β	31.0 - 41.0 degree
γ	—

ON: Solenoid timer is ON.
OFF: Solenoid timer is OFF.
If there is no designation in the specifications for the Solenoid Timer's ON-OFF position, then the position should be regarded as OFF.

Injection Pump Calibration Standard (Cont'd)

Control lever angle measurement position

Measure the control lever angles (α, β).

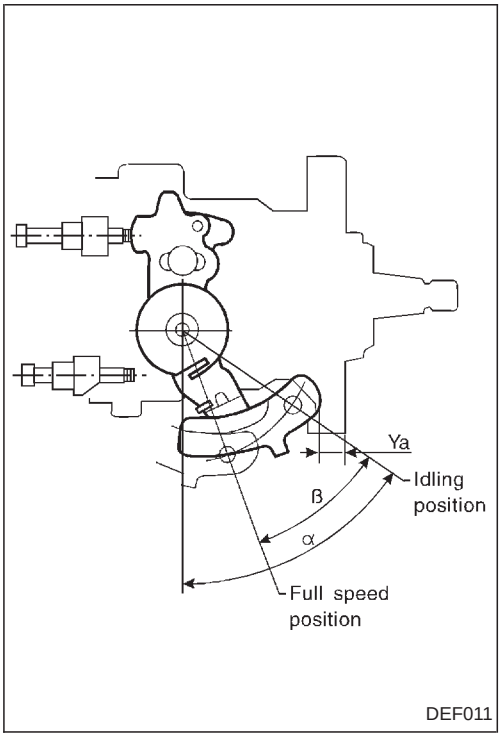

Injection Pump Calibration Standard (Cont'd)

TD27 ENGINE MODEL

Pump rotation: Clockwise—viewed from drive side

Injection pump assembly No.	104745-7790
Part No.	16700 2S512

1. Test conditions

1 - 1 Nozzle: 105780-0060 (NP-DN0SD1510)

1 - 2 Nozzle holder: 105780-2150

1 - 3 Nozzle opening pressure: $13{,}043^{+294}_{0}$ kPa ($130.4^{+2.9}_{0}$ bar, 133^{+3}_{0} kg/cm^2, $1{,}891^{+43}_{0}$ psi)

1 - 4 Injection pipe: 2 dia. x 6 dia. x 450 mm (0.08 dia. x 0.24 dia. x 17.72 in)

1 - 5 Fuel oil temperature: 45^{+5}_{0} °C (113^{+9}_{0} °F)

1 - 6 Supply pump pressure: 20 kPa (0.20 bar, 0.2 kg/cm^2, 2.8 psi)

2. Setting		Pump speed rpm	Settings	Charge air press kPa (mbar, mmHg, inHg)	Difference in delivery mℓ (Imp fl oz)
2 - 1	Timing device travel	1,700	4.7 - 5.1 mm (0.185 - 0.201 in)	—	—
2 - 2	Supply pump pressure	1,700	549 - 608 kPa (5.49 - 6.08 bar, 5.6 - 6.2 kg/cm^2, 80 - 88 psi)		—
2 - 3	Full-load delivery	1,100	49.8 - 50.8 mℓ (1.75 - 1.79 Imp fl oz)/1,000 st		3.0 (0.11)
2 - 4	Idle speed regulation	350	5.3 - 9.3 mℓ (0.19 - 0.33 Imp fl oz)/1,000 st		2.0 (0.07)
2 - 5	Start	100	45.0 - 80.0 mℓ (1.58 - 2.82 Imp fl oz)/1,000 st		—
2 - 6	Full-load speed regulation	2,350	32.2 - 36.2 mℓ (1.13 - 1.27 Imp fl oz)/1,000 st		—
2 - 7	ACS adjustment	1,100	39.7 - 42.7 mℓ (1.40 - 1.50 Imp fl oz)/1,000 st		—

3. Test specifications					
3 - 1 Timing device	N = rpm mm (in)	1,100 2.2 - 3.0 (0.087 - 0.12)	1,700 4.6 - 5.1 (0.181 - 0.201)	2,150 6.0 - 7.2 (0.236 - 0.283)	2,550 6.8 - 7.8 (0.268 - 0.307)
3 - 2 Supply pump	N = rpm kPa (bar, kg/cm^2, psi)		1,700 549 - 608 (5.49 - 6.08, 5.6 - 6.2, 80 - 88)	2,150 647 - 706 (6.47 - 7.06, 6.6 - 7.2, 94 - 102)	
3 - 3 Overflow delivery	N = rpm mℓ (Imp fl oz)/min.	1,100 258 - 522 (9.1 - 18.4)			

3 - 4 Fuel injection quantities

Speed control lever position	Pump speed rpm	Fuel delivery mℓ (Imp fl oz)/1,000 st	Charge air press kPa (mbar, mmHg, inHg)
Max. speed	1,100	49.3 - 51.3 (1.74 - 1.81)	—
	600	48.8 - 52.8 (1.72 - 1.86)	
	1,100	39.2 - 43.2 (1.38 - 1.52)	
	2,150	38.7 - 42.9 (1.36 - 1.51)	
	2,350	31.7 - 36.7 (1.12 - 1.29)	
	2,550	5.6 - 14.6 (0.20 - 0.51)	
	2,700	Below 5.0 (0.18)	
Switch OFF Magnet valve	350	0 (0)	—
Idling	350	5.3 - 9.3 (0.19 - 0.33)	—
	450	Below 3.0 (0.11)	
3 - 5 Solenoid	Max. cut-in voltage: 8V Test voltage: 12 - 14V		

4. Dimensions	
K	3.2 - 3.4 mm (0.126 - 0.134 in)
KF	5.7 - 5.9 mm (0.224 - 0.232 in)
MS	0.8 - 1.0 mm (0.031 - 0.039 in)
BCS	—
Pre-stroke	—
Control lever angle	
α	51.5 - 59.5 degree
β	31.0 - 41.0 degree
γ	—

ACS: High altitude compensator

Injection Pump Calibration Standard (Cont'd)

Control lever angle measurement position

Measure the control lever angles (α, β).

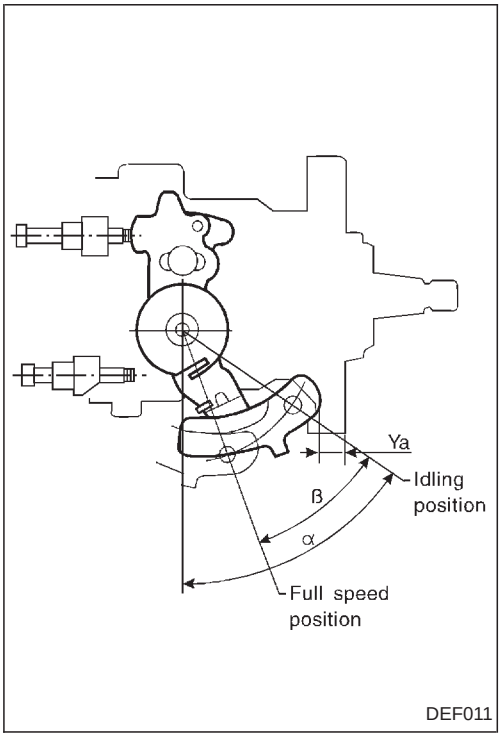

Injection Pump Calibration Standard (Cont'd)

Full-load fuel injection quantity and ACS (high altitude compensator) adjusting procedure at high altitudes

1. Full-load fuel injection quantity adjustment
(1) Remove the ACS cover, the bellows and the adjusting shims.
(2) Perform all adjustments as described in the adjusting specifications, except for ACS adjustment.
2. ACS adjustment
(1) Attach the ACS cover, the bellows and the adjusting shims.
(2) At a pump speed of 1,100 rpm and referring to the graph below, use the shims to adjust the fuel injection quantity decrease quantity according to the altitude.

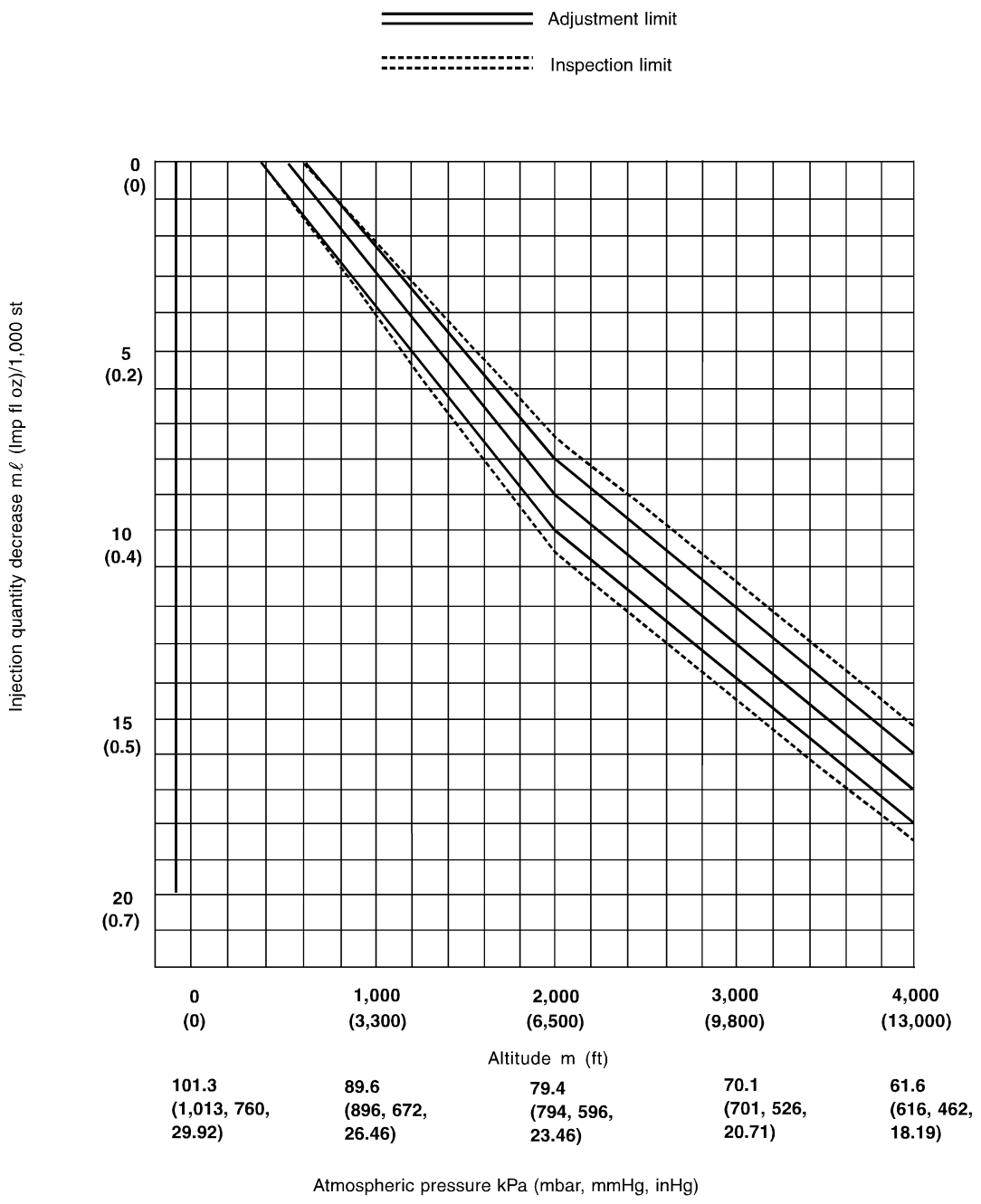

Injection Pump Calibration Standard (Cont'd)

TD27 ENGINE MODEL

Injection pump assembly No.	104745-7800
Part No.	16700 2S513

Pump rotation: Clockwise—viewed from drive side

1. Test conditions

1 - 1 Nozzle: 105780-0060 (NP-DN0SD1510)

1 - 2 Nozzle holder: 105780-2150

1 - 3 Nozzle opening pressure: $13{,}043^{+294}_{0}$ kPa ($130.4^{+2.9}_{0}$ bar, 133^{+3}_{0} kg/cm^2, $1{,}891^{+43}_{0}$ psi)

1 - 4 Injection pipe: 2 dia. x 6 dia. x 450 mm (0.08 dia. x 0.24 dia. x 17.72 in)

1 - 5 Fuel oil temperature: 45^{+5}_{0} °C (113^{+9}_{0} °F)

1 - 6 Supply pump pressure: 20 kPa (0.20 bar, 0.2 kg/cm^2, 2.8 psi)

2. Setting		Pump speed rpm	Settings	Charge air press kPa (mbar, mmHg, inHg)	Difference in delivery mℓ (Imp fl oz)
2 - 1	Timing device travel	1,700	6.5 - 6.9 mm (0.256 - 0.272 in)		—
2 - 2	Supply pump pressure	1,700	549 - 608 kPa (5.49 - 6.08 bar, 5.6 - 6.2 kg/cm^2, 80 - 88 psi)		—
2 - 3	Full-load delivery	1,100	49.8 - 50.8 mℓ (1.75 - 1.79 Imp fl oz)/1,000 st		3.0 (0.11)
2 - 4	Idle speed regulation	350	5.3 - 9.3 mℓ (0.19 - 0.33 Imp fl oz)/1,000 st	—	2.0 (0.07)
2 - 5	Start	100	45.0 - 80.0 mℓ (1.58 - 2.82 Imp fl oz)/1,000 st		—
2 - 6	Full-load speed regulation	2,350	32.2 - 36.2 mℓ (1.13 - 1.27 Imp fl oz)/1,000 st		—
2 - 7	ACS adjustment	1,100	39.7 - 42.7 mℓ (1.40 - 1.50 Imp fl oz)/1,000 st		—

3. Test specifications					
3 - 1 Timing device	N = rpm mm (in)	400 Below 1.0 (0.039)	1,100 2.8 - 4.0 (0.110 - 0.157)	1,700 6.4 - 7.0 (0.252 - 0.276)	2,150 7.6 - 8.6 (0.299 - 0.339)
3 - 2 Supply pump	N = rpm kPa (bar, kg/cm^2, psi)		1,100 402 - 461 (4.02 - 4.61, 4.1 - 4.7, 58 - 67)	1,700 549 - 608 (5.49 - 6.08, 5.6 - 6.2, 80 - 88)	2,150 (647 - 706 (6.47 - 7.06, 6.6 - 7.2, 94 - 102)
3 - 3 Overflow delivery	N = rpm mℓ (Imp fl oz)/min.		1,100 258 - 522 (9.1 - 18.4)		

3 - 4 Fuel injection quantities

Speed control lever position	Pump speed rpm	Fuel delivery mℓ (Imp fl oz)/1,000 st	Charge air press kPa (mbar, mmHg, inHg)
Max. speed	1,100	49.3 - 51.3 (1.74 - 1.81)	—
	600	48.8 - 52.8 (1.72 - 1.86)	
	1,100	39.2 - 43.2 (1.38 - 1.52)	
	2,150	38.7 - 42.9 (1.36 - 1.51)	
	2,350	31.7 - 36.7 (1.12 - 1.29)	
	2,550	5.6 - 14.6 (0.20 - 0.51)	
	2,700	Below 5.0 (0.18)	
Switch OFF Magnet valve	350	0 (0)	—
Idling	350	5.3 - 9.3 (0.19 - 0.33)	—
	450	Below 3.0 (0.11)	
3 - 5 Solenoid	Max. cut-in voltage: 8V Test voltage: 12 - 14V		

4. Dimensions	
K	3.2 - 3.4 mm (0.126 - 0.134 in)
KF	5.7 - 5.9 mm (0.224 - 0.232 in)
MS	0.8 - 1.0 mm (0.031 - 0.039 in)
BCS	—
Pre-stroke	—
Control lever angle	
α	51.5 - 59.5 degree
β	31.0 - 41.0 degree
γ	—

ACS: High altitude compensator

Injection Pump Calibration Standard (Cont'd)

Control lever angle measurement position

Measure the control lever angles (α, β).

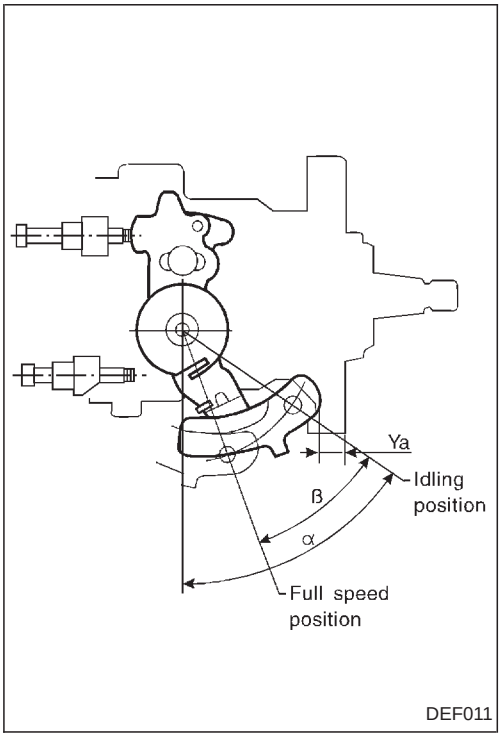

Injection Pump Calibration Standard (Cont'd)

Full-load fuel injection quantity and ACS (high altitude compensator) adjusting procedure at high altitudes

1. Full-load fuel injection quantity adjustment
(1) Remove the ACS cover, the bellows and the adjusting shims.
(2) Perform all adjustments as described in the adjusting specifications, except for ACS adjustment.
2. ACS adjustment
(1) Attach the ACS cover, the bellows and the adjusting shims.
(2) At a pump speed of 1,100 rpm and referring to the graph below, use the shims to adjust the fuel injection quantity decrease quantity according to the altitude.

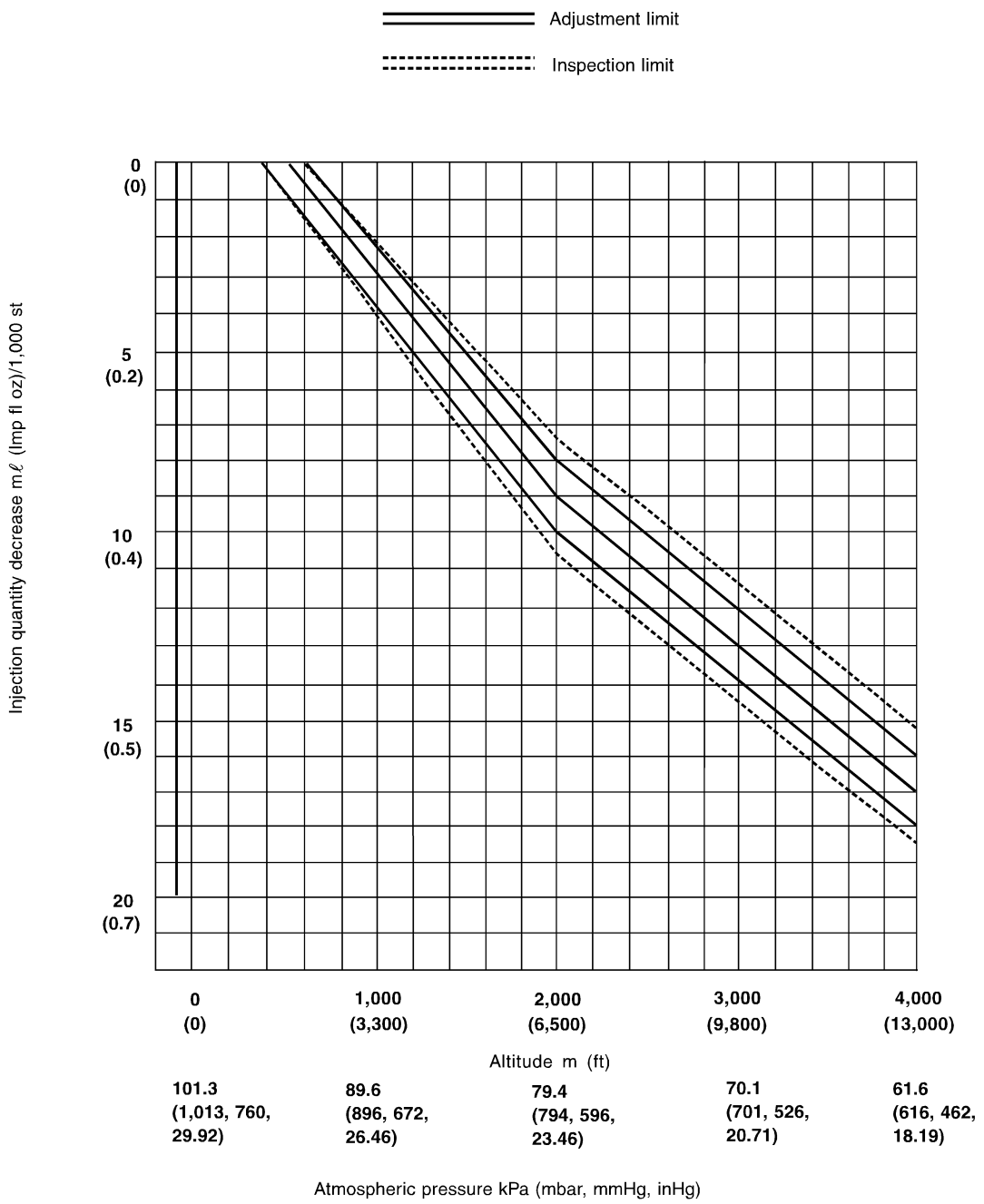

DEF024

Injection Pump Calibration Standard (Cont'd)

TD27 ENGINE MODEL

Pump rotation: Clockwise—viewed from drive side

Injection pump assembly No.	104745-7820
Part No.	16700 2S515

1. Test conditions

1 - 1 Nozzle: 105780-0060 (NP-DN0SD1510)

1 - 2 Nozzle holder: 105780-2150

1 - 3 Nozzle opening pressure: $13{,}043^{+294}_{0}$ kPa ($130.4^{+2.9}_{0}$ bar, 133^{+3}_{0} kg/cm^2, $1{,}891^{+43}_{0}$ psi)

1 - 4 Injection pipe: 2 dia. x 6 dia. x 450 mm (0.08 dia. x 0.24 dia. x 17.72 in)

1 - 5 Fuel oil temperature: 45^{+5}_{0} °C (113^{+9}_{0} °F)

1 - 6 Supply pump pressure: 20 kPa (0.20 bar, 0.2 kg/cm^2, 2.8 psi)

2. Setting		Pump speed rpm	Settings	Charge air press kPa (mbar, mmHg, inHg)	Difference in delivery mℓ (Imp fl oz)
2 - 1	Timing device travel	1,100	4.3±0.2 mm (0.169±0.008 in)	—	—
2 - 2	Supply pump pressure	1,100	481±29 kPa (4.81±0.29 bar, 4.9±0.3 kg/cm^2, 70±4 psi)		—
2 - 3	Full-load delivery	1,100	44.6±0.5 mℓ (1.57±0.02 Imp fl oz)/1,000 st		3.5 (0.12)
2 - 4	Idle speed regulation	350	7.1±2.0 mℓ (0.25±0.07 Imp fl oz)/1,000 st		2.0 (0.07)
2 - 5	Start (Full lever)	100	57.5±5.0 mℓ (2.02±0.18 Imp fl oz)/1,000 st		—
2 - 6	Full-load speed regulation	2,550	15.7±2.0 mℓ (0.55±0.07 Imp fl oz)/1,000 st		—
2 - 7	Load timer adjustment	1,100	3.0±0.2 mm (0.12±0.008 in)		—

3. Test specifications					
3 - 1 Timing device	N = rpm mm (in)	700 2.0±0.4 (0.079±0.016)*	1,100 4.3±0.3 (0.169±0.012)	1,700 7.4±0.5 (0.291±0.020)*	2,200 $9.0^{+0.4}_{-0.5}$ ($0.354^{+0.016}_{-0.020}$)
3 - 2 Supply pump	N = rpm kPa (bar, kg/cm^2, psi)		1,100 481±39 (4.81±0.39, 4.9±0.4, 70±6)	1,700 628±39 (6.28±0.39, 6.4±0.4, 91±6)*	
3 - 3 Overflow delivery	N = rpm mℓ (Imp fl oz)/min.	1,100 390±130 (13.7±4.6)			

3 - 4 Fuel injection quantities

Speed control lever position	Pump speed rpm	Fuel delivery mℓ (Imp fl oz)/1,000 st	Charge air press kPa (mbar, mmHg, inHg)
Max. speed	1,100	44.6±1.0 (1.57±0.04)	—
	500	40.3±3.0 (1.42±0.11)*	
	850	42.0±2.5 (1.48±0.09)*	
	2,150	42.9±2.5 (1.51±0.09)*	
	2,400	34.0±4.5 (1.20±0.16)*	
	2,550	15.7±3.0 (0.55±0.11)	
	2,800	Below 5.0 (0.18)	
Switch OFF Magnet valve	350	0 (0) Idle	—
Idling	350	7.1±2.5 (0.25±0.09)	—
3 - 5 Solenoid	Max. cut-in voltage: 8V Test voltage: 12 - 14V		

4. Dimensions	
K	3.3±0.1 mm (0.130±0.004 in)
KF	6.36±0.1 mm (0.2504±0.0039 in)
MS	0.9±0.1 mm (0.035±0.004 in)
BCS	—
Pre-stroke	—
Control lever angle	
α	21.0 - 29.0 degree
β	31.0 - 41.0 degree
γ	—

*: Reference value

Injection Pump Calibration Standard (Cont'd)

Control lever angle measurement position

Measure the control lever angles (α, β).

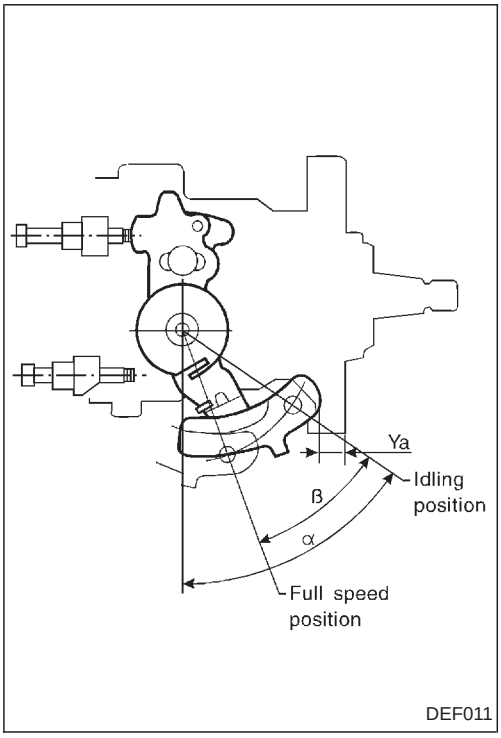

Load timer adjustment

1. Fix the control lever in the position satisfying the following conditions.
   Pump speed: 1,100 rpm
   Fuel injection quantity: 32.0±0.5 mℓ (1.13±0.02 Imp fl oz)/1,000 st
2. With the control lever positioned as described in 1. above, adjust the governor sleeve so that the timer stroke conforms to the specified values (item 2 - 7).

Control lever position			Specified values	
Pump speed rpm	Fuel injection quantity mℓ (Imp fl oz)/1,000 st	Boost pressure kPa (mbar, mmHg, inHg)	Timer stroke mm (in)	Timer stroke reduction value mm (in)
1,100	32.0±0.5 (1.13±0.02)	—	3.0±0.3 (0.118±0.012)	1.3 (0.051)
1,100	22.0±2.5 (0.77±0.09)*	—	1.8±0.5 (0.071±0.020)*	2.5 (0.098)*

*: Reference value